UCRL-16705

University of California

Ernest O. Lawrence Radiation Laboratory

THE MASS OF ^{8}He FROM THE FOUR-NEUTRON TRANSFER REACTION ^{26}Mg(α, ^{8}He)^{22}Mg

TWO-WEEK LOAN COPY

This is a Library Circulating Copy which may be borrowed for two weeks. For a personal retention copy, call Tech. Info. Division, Ext. 5545

Berkeley, California

DISCLAIMER

This document was prepared as an account of work sponsored by the United States Government. While this document is believed to contain correct information, neither the United States Government nor any agency thereof, nor the Regents of the University of California, nor any of their employees, makes any warranty, express or implied, or assumes any legal responsibility for the accuracy, completeness, or usefulness of any information, apparatus, product, or process disclosed, or represents that its use would not infringe privately owned rights. Reference herein to any specific commercial product, process, or service by its trade name, trademark, manufacturer, or otherwise, does not necessarily constitute or imply its endorsement, recommendation, or favoring by the United States Government or any agency thereof, or the Regents of the University of California. The views and opinions of authors expressed herein do not necessarily state or reflect those of the United States Government or any agency thereof or the Regents of the University of California.

UCRL-16705

UNIVERSITY OF CALIFORNIA

Lawrence Radiation Laboratory
Berkeley, California

AEC Contract No. W-7405-eng-48

THE MASS OF ^{8}He FROM THE FOUR-NEUTRON TRANSFER REACTION ^{26}Mg(α,^{8}He)^{22}Mg

J. Cerny, S. W. Cosper, G. W. Butler, R. H. Pehl,
F. S. Goulding, D. A. Landis, and C. Détraz

February 1966

THE MASS OF ^{8}He FROM THE FOUR-NEUTRON TRANSFER REACTION ^{26}Mg(α,^{8}He)^{22}Mg†

J. Cerny, S. W. Cosper, G. W. Butler, R. H. Pehl,
F. S. Goulding, D. A. Landis, and C. Détraz*

Department of Chemistry and
Lawrence Radiation Laboratory
University of California
Berkeley, California

February 1966

We wish to report the existence and mass of ^{8}He as determined from the four-neutron transfer reaction ^{26}Mg(α,^{8}He)^{22}Mg. The accurate mass of ^{8}He may serve as a guide among the various[1-3] prescriptions which predict the many yet unobserved high T states in the very light nuclei, while the development of a technique for measuring ^{8}He as a reaction product permits an exploration of nuclear masses bracketing the predicted[4] neutron-deficient edge of stability in the light elements (e.g., the masses of ^{12}O and ^{16}Ne—nuclei which are also candidates for double proton decay). While the present experiment was in progress, two other definite observations of the existence of ^{8}He were made. Cosper, Cerny, and Gatti[5] observed ~500 ^{8}He nuclei as third fragments in ^{252}Cf fission (~1 in 10^{6} fissions) utilizing counter telescope techniques similar to those described below, while Poskanzer, Esterlund, and McPherson,[6] in experiments with the Brookhaven Cosmotron, reported the decay properties and 122 msec half-life of ^{8}He.

It was first necessary to redetermine the masses of the ground and low excited states of ^{22}Mg since various systematics[7] implied that the reported data[8] were in error. By utilizing the ^{24}Mg(p,t)^{22}Mg reaction, the mass excess of ^{22}Mg was found to be -0.38±0.05 MeV on the ^{12}C scale with excited states at 1.22±0.03 and 3.24±0.05 MeV.[9,10]

The Berkeley 88-inch cyclotron provided an analyzed beam of 80 MeV alpha-particles which impinged on a ^{26}Mg target in an evacuated scattering chamber. Preliminary experiments indicated two problems which required an advance in particle-identifier technique. One was the necessity of identifying 32-36 MeV ^{8}He particles (depending on the correct mass prediction[1-3]) with a $d\sigma_{gs}$(lab) of ~50 nb/sr or about 1 ^{8}He per 10^{7} particles traversing a counter telescope. The other was the fact that the chance coincidence of an alpha-particle and a deuteron traversing the telescope within the resolving time of the system can produce an energy loss and hence identification pulse almost identical to that of a ^{8}He particle, thereby introducing a difficult background problem.

The major features of the final system[11] are indicated in Fig. 1 and are as follows:

a. A three counter system with two "ΔE" detectors denoted ΔE2 and ΔE1 is employed for identification in order to eliminate the events exhibiting abnormally high energy loss (Landau tail, blocking, etc.) or abnormally low energy loss (channeling, etc.) in a single ΔE detector and which would produce an incorrect identification pulse. To accomplish this, Ident. 1 on Fig. 1 produces two identification pulses from our standard circuitry[12]; the first identification pulse is based on the ΔE2 signal as the "ΔE" pulse and the sum of the ΔE1 and E signals as the "E" pulse, while the second utilizes the ΔE1 signal as "ΔE" and the E signal as "E". These identification pulses are normally proportional to the ΔE2 and ΔE1 detector thicknesses, respectively. The comparator measures the ratio of these pulses and an event is rejected if this ratio does not fall within prescribed fractional limits. In

practice the great majority of "incorrect" identifications are eliminated while rejecting only 1 to 6% of the events. The final identification output (Ident. 2) results from a third identification pulse, which utilizes the sum of $\Delta E2$ and $\Delta E1$ as its "ΔE" pulse.

b. Fast coincidence techniques and a pile-up rejector system restrict all allowed events to within a single beam burst. Single channel analyzers in the linear amplifiers allow signals only in the expected ^{8}He energy range.

c. Detector thicknesses are selected to provide optimum operation only for the ^{8}He particles and a calibration group (here ^{7}Li from the $^{26}Mg(\alpha,{}^{7}Li)^{23}Na$ reaction). A rejection detector removes all events (e.g., No. 2 on Fig. 1) passing through the counter telescope. Diffused Si transmission counters are used to obtain minimum window thicknesses throughout.

d. As a final filter, all events in the ^{8}He region of the identifier are recorded in a small on-line computer which retains complete information on the $\Delta E2$, $\Delta E1$, E-total and identifier signals. The computer also stores a pulser-simulated ^{8}He event every 12 minutes to check the entire system and provide an accurate measure of drifts. A monitor detector independently measures the beam energy variation with time.

We wish to present the results of two runs at 14 deg. lab of length 52 hours (Run 1) and 60 hours (Run 2) and of alpha-particle energies 78.4 and 80.0 MeV, respectively. Run 2 will be considered in more detail since it employed the pile-up rejector and the on-line computer; otherwise, the runs were essentially identical. The complete particle identifier spectrum for Run 2 is shown in Fig. 2 along with the spectrum for the region above ^{8}He from Run 1.

The tailing on the ^{6}Li peak during Run 2, which was not present during Run 1 (dashed lines in Fig. 2), was due to relaxed single channel analyzer settings on ΔE2 and ΔE1 which permitted storage of ^{8}Li pulses as a further calibration but failed to reject ^{6}Li ions of marginal behavior. Complete data on particles whose identification pulse appeared in region A-B were stored in the computer and later analyzed in detail. This analysis revealed that no ^{6}Li ions were present in region A-B. Otherwise, this region encompassed the ^{8}He peak as predicted from range-energy systematics and most of two other peaks due to alpha-proton chance coincidences and alpha-triton chance coincidences, which simulate ^{7}He and ^{9}He particles, respectively. [^{7}He has been predicted to be particle unstable from calculations based on the T = 3/2 states in mass seven[13] and Ref. 5 places an upper limit for its emission in ^{252}Cf fission as <1 per 3000 ^{6}He fragments or <1 per 30 ^{8}He fragments. ^{9}He would not be expected to be stable on general systematics.] The observed alpha-proton and alpha-triton chance coincidences agreed within statistics with those predicted from the appropriate singles rates and led us to expect 12±4 alpha-deuteron chance coincidences among the 26 events in the ^{8}He identifier peak. No significant grouping of the alpha-proton or alpha-triton energy spectra was observed.

Figure 3 presents energy spectra from both runs arising from the same identifier region. The energy range over which valid events could have been observed is indicated; no ^{8}He events from the minor target impurities (^{12}C, ^{16}O, ^{24}Mg) were energetically possible. The noticeable reduction of "background" events in Run 2 was due primarily to the pile-up rejector. Further, 8 of the 26 possible ^{8}He events in Run 2 can be excluded, having been shown to be alpha-deuteron coincidences and not real ^{8}He nuclei through analysis of their losses in the ΔE2 and ΔE1 detectors. [Only some of the chance coincidences can be

eliminated in this manner; the excluded events do not affect our mass arguments and are the shaded ones in Fig. 3.]

The last problem that must be discussed is the likelihood of obtaining distorted spectra from the presence of correlated alpha-deuteron coincidences from the breakup of any $^{6}Li^{*}$ ions in the exit channel.[14] Only breakup of ^{6}Li ions excited to the 2.18 MeV level could be observed as correlated coincidences due to the restrictions imposed by kinematics, geometry, and detector thicknesses. Since the population of this level is not known, we assumed as an upper limit[15] that it is of the same order as the average ^{6}Li g.s. continuum cross-section; with this assumption, at most three correlated alpha-deuteron coincidences would be present in the data of Run 2.

Figure 3 clearly indicates two $^{26}Mg(\alpha,{}^{8}He)^{22}Mg$ transitions common to the runs whose spacing is that between the ground and first excited states of ^{22}Mg. Run 1 could not have observed transitions to the second excited level of ^{22}Mg and Run 2 apparently did not; it is of interest that this second level is only weakly populated in the $^{24}Mg(p,t)^{22}Mg$ reaction at the observed forward angles. The ground state peaks in both spectra agree in absolute value to 60 keV and determine a mass excess for ^{8}He of 31.65±0.12 MeV on the ^{12}C scale. A mass excess of 32.4±1.5 MeV for ^{8}He was calculated from the decay experiment of Poskanzer et al.[6] The lightest particle-unstable channel of ^{8}He is (^{6}He+2n) with a mass excess of 33.7 MeV.

Three theoretical predictions of the mass of ^{8}He are of current interest and that of Goldanskii[1] agrees best with these results. His prediction is based on the assumption that the pairing energy of the last two neutrons in ^{8}He is less than that in ^{6}He [2.86 MeV] and greater than that in ^{9}Li [2.02 MeV]; based on the ^{7}He mass calculated in Ref. 13, a mass excess for ^{8}He of 32.0±0.4 MeV

would be predicted. The expression of Garvey and Kelson[2] predicts $29.7^{+\sim 1.5}_{-\sim 0.5}$ MeV, while Jänecke's systematics[3] predict 34.2±~2 MeV.[16]

Of the light nuclei whose existence is related to the mass of ^{8}He (see Ref. 17), only[18] the tetraneutron remains as possibly particle stable. Our measured ^{8}He mass and the observed β-decay[6] require a binding energy of less than 3.06±0.12 MeV for ^{4}n. Tang and Bayman[19] summarize the experimental status of ^{4}n and can calculate no bound state.

The experimental technique reported herein now makes possible the exploration of the neutron-deficient edge of particle stability in the lighter elements from (α, ^{8}He) transitions. Masses of T_z = -2 nuclei such as ^{12}O, ^{16}Ne, ^{20}Mg, etc., are additionally of interest since they will permit a further test of the isobaric multiplet mass equation.

We wish to thank Dr. Gerald T. Garvey for several valuable discussions, Dr. Lloyd Robinson for developing the ADC-buffer system and Creve C. Maples for the range-energy programs used in analyzing these data.

FOOTNOTES AND REFERENCES

†Work performed under the auspices of the U. S. Atomic Energy Commission.

*CNRS and NATO fellow, visitor from Laboratoire Joliot-Curie de Physique Nucleaire, Orsay, France.

1. V. I. Goldanskii, Zh. Eksperim. i Teor. Fiz. 38, 1637 (1960); [Trans.: Soviet Phys. JETP 11, 1179 (1960)].
2. G. T. Garvey and I. Kelson, Phys. Rev. Letters 16, 197 (1966).
3. J. Jänecke, Nucl. Phys. 73, 97 (1965).
4. A. I. Baz, V. I. Goldanskii and Ya. B. Zeldovich, Usp. Fiz. Nauk 72, 211 (1960); [Trans.: Soviet Phys. Usp. 3, 729 (1961)]; J. Jänecke, Nucl. Phys. 61, 326 (1965).
5. S. W. Cosper, J. Cerny, and R. Gatti, (in preparation).
6. A. M. Poskanzer, R. A. Esterlund, and R. McPherson, Phys. Rev. Letters 15, 1030 (1965).
7. We wish to thank Paul C. Rogers for first bringing this to our attention.
8. F. Ajzenberg-Selove, L. Cranberg, and F. S. Dietrich, Phys. Rev. 124, 1548 (1961).
9. We wish to thank Gerald T. Garvey for participating in this measurement.
10. This ^{22}Mg mass compares well with measurements of -0.33±0.03 MeV (private communication, R. W. Kavanagh) and -0.34±0.05 MeV (private communication, W. Whaling and C. Moss).
11. F. S. Goulding, D. A. Landis, J. Cerny, and R. H. Pehl, (to be presented at the IEEE Scintillation Symposium, March 1966).
12. F. S. Goulding, D. A. Landis, J. Cerny, and R. H. Pehl, Nucl. Instr. Methods 31, 1 (1964).

13. C. Détraz, J. Cerny, and R. H. Pehl, Phys. Rev. Letters 14, 708 (1965).

14. No contribution from ^{6}Li g.s. dissociation, as reported by R. W. Ollerhead, C. Chasman and D. A. Bromley, Phys. Rev. 134, B74 (1964), is possible.

15. The population of the ^{7}Li* (0.478 MeV) level is at most one-third that of the ^{7}Li g.s. in (α,^{7}Li) reactions induced on light targets at these beam energies.

16. It is of interest to note that Jänecke's prediction of $\Delta T_{3/2,1/2}$ in mass seven of 15.9±2 MeV also does not agree with the experimental value (see Ref. 13) of 10.96±0.22 MeV.

17. A. I. Baz, V. I. Goldanskii and Ya. B. Zeldovich, Usp. Fiz. Nauk 85, 445 (1965); [Trans.: Soviet Phys. Usp. 8, 177 (1965)].

18. If we use the result of J. Cerny, C. Détraz and R. H. Pehl, Phys. Rev. Letters 15, 300 (1965), that ^{4}H is unbound by 2 MeV, then Goldanskii's systematics (see Ref. 1) also preclude the existence of ^{5}H, which is in accord with experiment.

19. Y. C. Tang and B. F. Bayman, Phys. Rev. Letters 15, 165 (1965).

FIGURE CAPTIONS

Fig. 1. An abbreviated block diagram of the electronic equipment.

Fig. 2. A complete particle-identifier spectrum for Run 2. Single channel analyzers were set such that only alpha-particles of energy between 22.7 and 26.6 MeV were identified. Counts in the region between A and B were stored in the on-line computer. The dotted lines represent the complete particle identifier spectrum of Run 1 for channels 150 and higher.

Fig. 3. The energy spectra from the $^{26}Mg(\alpha, {}^{8}He)^{22}Mg$ reaction at 14 deg. for both Runs 1 and 2. The block width of each count corresponds to the expected full width of a ^{8}He peak and the central dot represents the exact energy of each event. Shaded counts in the Run 2 spectrum can be excluded from consideration as true ^{8}He particles through an analysis of their energy losses in the ΔE detectors.

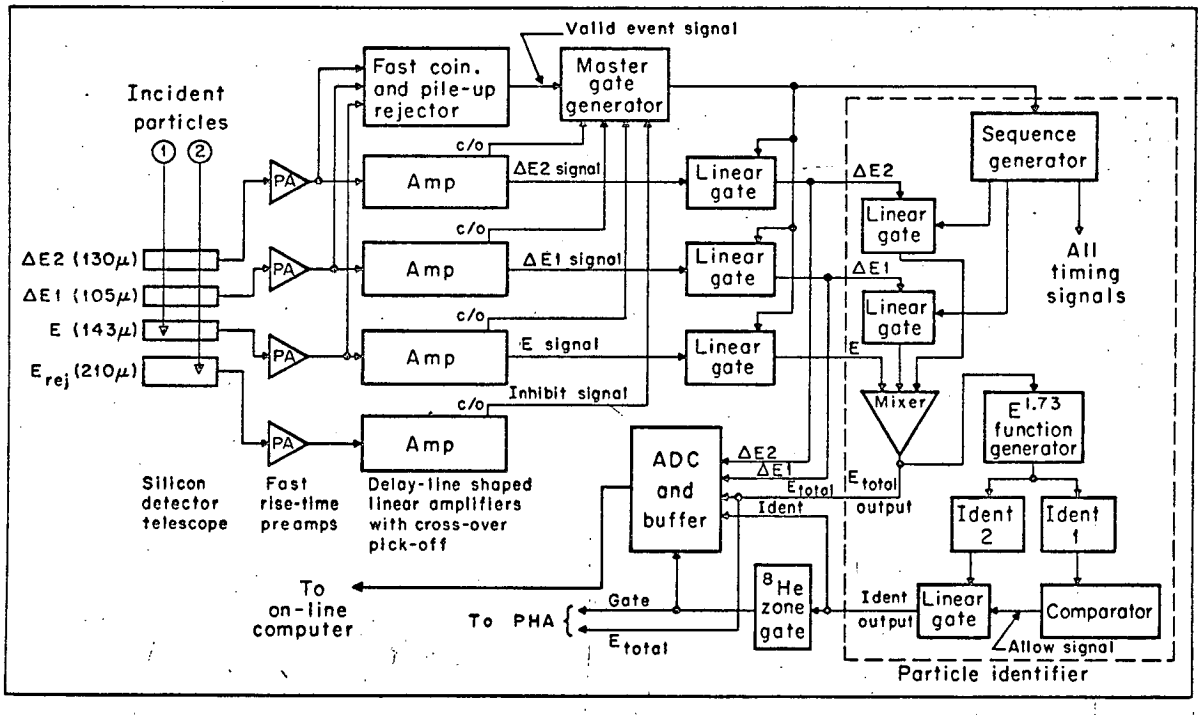
Valid event signal
Fast coin. and pile-up rejector
Master gate generator
Incident particles
1
2
c/o
Amp
ΔE2 signal
Linear gate
Sequence generator
ΔE2
Linear gate
ΔE2 (130μ)
ΔE1 (105μ)
E (143μ)
E rej (210μ)
PA
ΔE1 signal
ΔE1
All timing signals
E signal
E
Inhibit signal
Mixer
E 1.73 function generator
ADC and buffer
ΔE2
ΔE1
E total
Ident
E total output
Ident 2
Ident 1
Silicon detector telescope
Fast rise-time preamps
Delay-line shaped linear amplifiers with cross-over pick-off
To on-line computer
To PHA
Gate
E total
8 He zone gate
Ident output
Comparator
Allow signal
Particle identifier
MUB-9482

Fig. 1

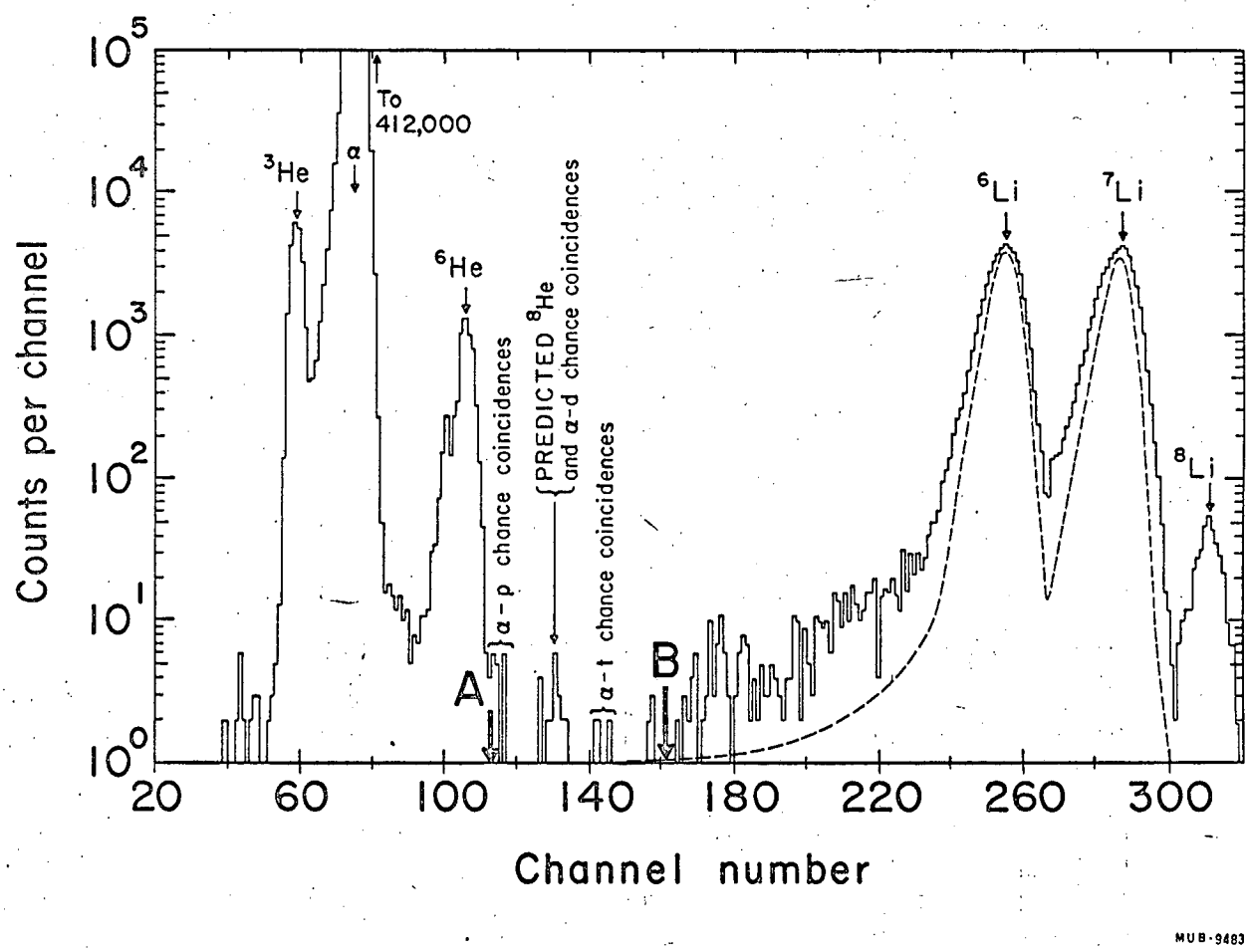
Counts per channel
Channel number
10^5
10^4
10^3
10^2
10^1
10^0
20
60
100
140
180
220
260
300
^{3}He
α
To 412,000
^{6}He
α-p chance coincidences
PREDICTED ^{8}He and α-d chance coincidences
α-t chance coincidences
A
B
^{6}Li
^{7}Li
^{8}Li
MUB-9483

Fig. 2.

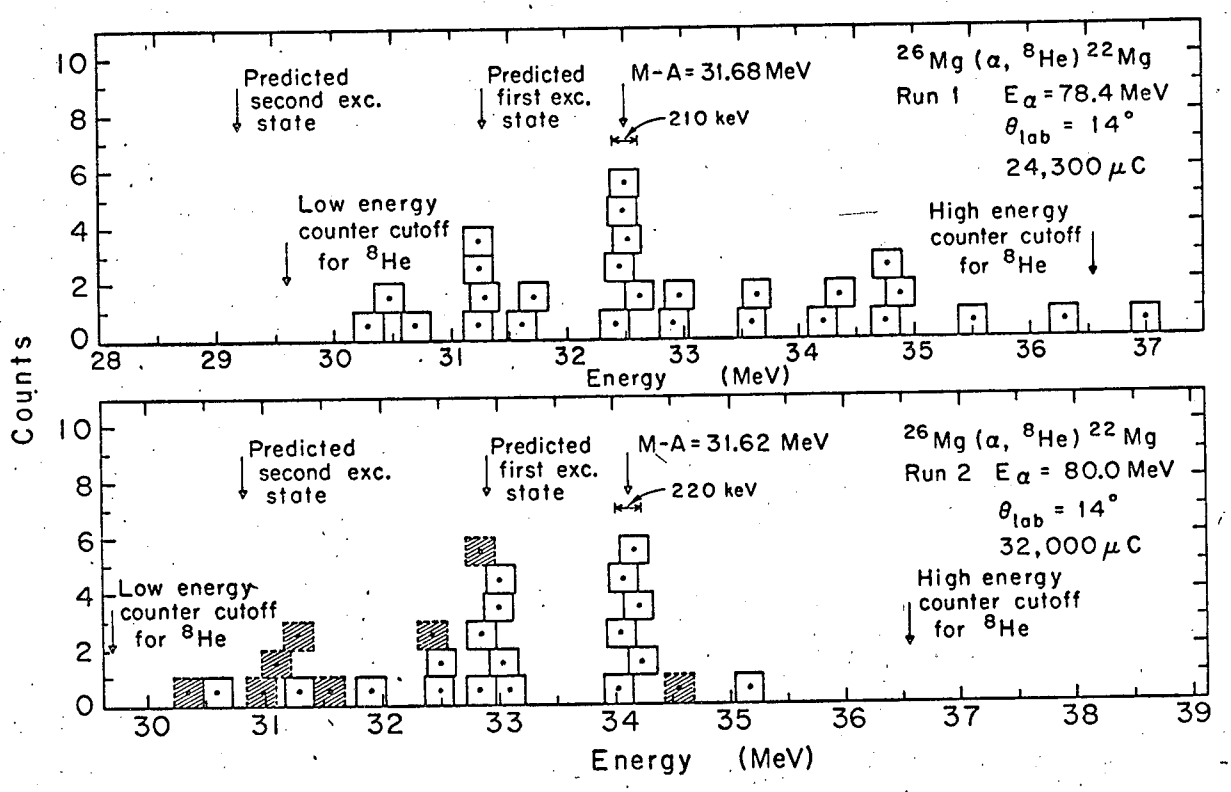
Counts
Predicted second exc. state
Predicted first exc. state
M-A = 31.68 MeV
210 keV
^{26}Mg (α, ^{8}He) ^{22}Mg
Run 1
E_α = 78.4 MeV
θ_{lab} = 14°
24,300 μC
Low energy counter cutoff for ^{8}He
High energy counter cutoff for ^{8}He
Energy (MeV)
Predicted second exc. state
Predicted first exc. state
M-A = 31.62 MeV
220 keV
^{26}Mg (α, ^{8}He) ^{22}Mg
Run 2
E_α = 80.0 MeV
θ_{lab} = 14°
32,000 μC
Low energy counter cutoff for ^{8}He
High energy counter cutoff for ^{8}He
Energy (MeV)
MUB-9484

Fig. 3.

This report was prepared as an account of Government sponsored work. Neither the United States, nor the Commission, nor any person acting on behalf of the Commission:

A. Makes any warranty or representation, expressed or implied, with respect to the accuracy, completeness, or usefulness of the information contained in this report, or that the use of any information, apparatus, method, or process disclosed in this report may not infringe privately owned rights; or

B. Assumes any liabilities with respect to the use of, or for damages resulting from the use of any information, apparatus, method, or process disclosed in this report.

As used in the above, "person acting on behalf of the Commission" includes any employee or contractor of the Commission, or employee of such contractor, to the extent that such employee or contractor of the Commission, or employee of such contractor prepares, disseminates, or provides access to, any information pursuant to his employment or contract with the Commission, or his employment with such contractor.