UCRL-16718

c.2

University of California

Ernest O. Lawrence Radiation Laboratory

HIGH-VOLTAGE LITHIUM-DRIFTED SILICON DETECTORS

TWO-WEEK LOAN COPY

This is a Library Circulating Copy which may be borrowed for two weeks. For a personal retention copy, call Tech. Info. Division, Ext. 5545

Berkeley, California

UCRL-16718 c.2

DISCLAIMER

This document was prepared as an account of work sponsored by the United States Government. While this document is believed to contain correct information, neither the United States Government nor any agency thereof, nor the Regents of the University of California, nor any of their employees, makes any warranty, express or implied, or assumes any legal responsibility for the accuracy, completeness, or usefulness of any information, apparatus, product, or process disclosed, or represents that its use would not infringe privately owned rights. Reference herein to any specific commercial product, process, or service by its trade name, trademark, manufacturer, or otherwise, does not necessarily constitute or imply its endorsement, recommendation, or favoring by the United States Government or any agency thereof, or the Regents of the University of California. The views and opinions of authors expressed herein do not necessarily state or reflect those of the United States Government or any agency thereof or the Regents of the University of California.

Research and Development

UCRL-16718
UC-37 Instruments
TID-4500 (48th Ed.)

UNIVERSITY OF CALIFORNIA
Lawrence Radiation Laboratory
Berkeley, California

AEC Contract No. W-7405-eng-48

HIGH-VOLTAGE LITHIUM-DRIFTED SILICON DETECTORS

Robert P. Lothrop and F. S. Goulding

April 1966

Printed in USA. Price $1.00. Available from the Clearinghouse for Federal Scientific and Technical Information, National Bureau of Standards, U. S. Department of Commerce, Springfield, Virginia.

HIGH-VOLTAGE LITHIUM-DRIFTED SILICON DETECTORS

Robert P. Lothrop and F. S. Goulding

Lawrence Radiation Laboratory
University of California
Berkeley, California

April 1966

Abstract

A "double-drifted" geometry, which may take several forms, is described. The geometry makes possible the very-high-voltage operation of lithium-drifted silicon radiation detectors.

Introduction

Collection-time limitations of detectors having the etched mesa structure[1] of Fig. 1 make it impractical to use finished devices much over 3 mm thick. The collection time of a 3-mm detector, at 25°C and normal voltages, is about 0.5 μsec. This collection time approaches the upper limit of practical use and increases in proportion to the square of the detector thickness. The current-vs-voltage curve of Fig. 2 is typical of that obtained with devices having this geometry. It will be seen that the leakage current rises rapidly above about 400 volts. Accompanying this increase in leakage is a large increase in noise from the detector. This places limits on the usable operating voltage. The increase in current at the higher voltages is due to the n-type channel which exists over the exposed intrinsic surface.[2] As the detector voltage is increased, the channel reaches through to the i-p junction, and surface breakdown at the i-p junction results. Thus the effects of an n-type surface inversion layer must be overcome to permit high operating voltages if very thick lithium-drifted silicon detectors are to have sufficiently short collection times.

Double-Drift Geometry

The "double-drifted" structure of Fig. 3 automatically limits the channel length and thus prevents it from reaching through to the i-p junction The function of the thin, peripheral intrinsic region, called a "shelf," is to provide a high, transverse field region which will cause depletion of the channel. Thus the effect of the n-type channel, of increasing the potential along the surface, is used to make the channel length self-limiting. Figure 4 shows surface voltage probe measurements which illustrate the self-limiting operation of the double-drift geometry. Figure 5 shows the room-temperature voltage-vs-current curve for a typical 3-mm-thick double-drifted detector. The onset of surface channel length limiting is apparent at 100 to 200 volts. Figure 6 shows the room-temperature voltage-vs-current curve for a 5-mm-thick double-drifted device.

Fabrication

The fabrication of very thick devices having the structure of Fig. 3 requires single-crystal silicon of large diameter. There are several ways in which small-diameter silicon may be used. The geometry illustrated in Fig. 7, with a rectangular mesa, has been fabricated successfully in the 5- to 7-mm thickness range. The geometry illustrated in Fig. 8, called a "top hat," seems very promising in the thickness range beyond 5 mm. A number of 5-mm-thick devices with this geometry have been fabricated, and larger devices are in process.

The geometry of Fig. 3 is fabricated as follows: Lithium is diffused into the entire surface of a silicon wafer of the desired thickness (Fig. 9a). The diffused wafer is masked and the sides etched to yield a diode with good reverse characteristics (Fig. 9b). The etched diode is drifted to obtain an intrinsic depth of about 0.5 mm (Fig. 9c). The drifted wafer is masked and etched to obtain a mesa of the required diameter (Fig. 9d). This device is

now drifted completely through (Fig. 9e). A thin gold entrance window[3] and varnish protection over a suitably treated surface complete the device (Fig. 9f).

Application

Devices 3-mm and 5-mm thick have been tested at 77°K, in low-energy spectroscopy applications. Resolution of the order of 0.75 to 1.5 keV FWHM has been obtained with bias voltages in excess of 1000 volts. An immediate advantage of these devices in this, as well as other, applications is the minimizing of trapping effects.

The use of double-drifted 5-mm-thick devices in high-energy cyclotron experiments has been reported elsewhere.[4]

Acknowledgments

Our thanks are due to several associates whose practical contributions and advice have been of considerable assistance in this work. Harry Smith in particular has constructed several of these detectors.

This work was carried out as part of the program of the Lawrence Radiation Laboratory and was supported by AEC Contract No. W-7405-eng-48.

References

1. F. S. Goulding and W. L. Hansen, An Automatic Lithium Drifting Apparatus for Silicon and Germanium Detectors, IEEE Trans. Nucl. Sci. NS-11, 286-290 (1964).

2. Jorge Llacer, Geometric Control of Surface Leakage Current and Noise in Lithium Drifted Silicon Radiation Detectors, Brookhaven National Laboratory, BNL-9535, 1965.

3. Robert P. Lothrop and Harry E. Smith, Lithium-Drifted Silicon Radiation Detector Production Process, Lawrence Radiation Laboratory Report UCRL-16190, June 1965.

4. R. H. Pehl, D. A. Landis, and F. S. Goulding, Detection of High Energy Protons by Thin-Window Lithium-Drifted Germanium Counters, Lawrence Radiation Laboratory Report UCRL-16722, Feb. 1966.

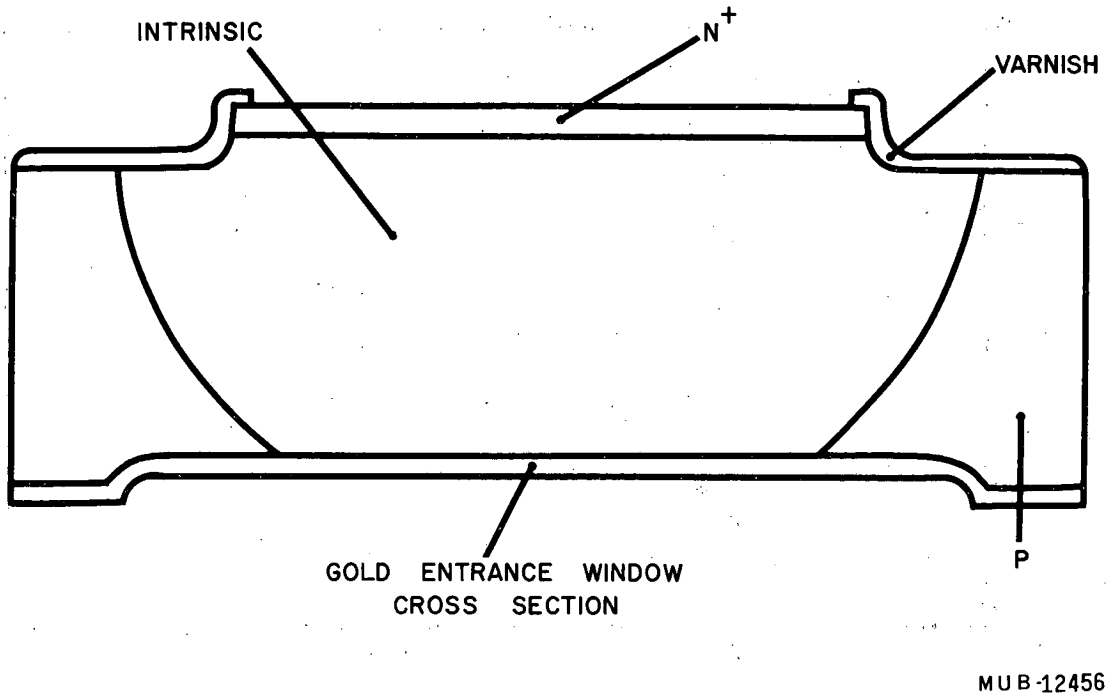

Fig. 1. Simple etched mesa geometry.

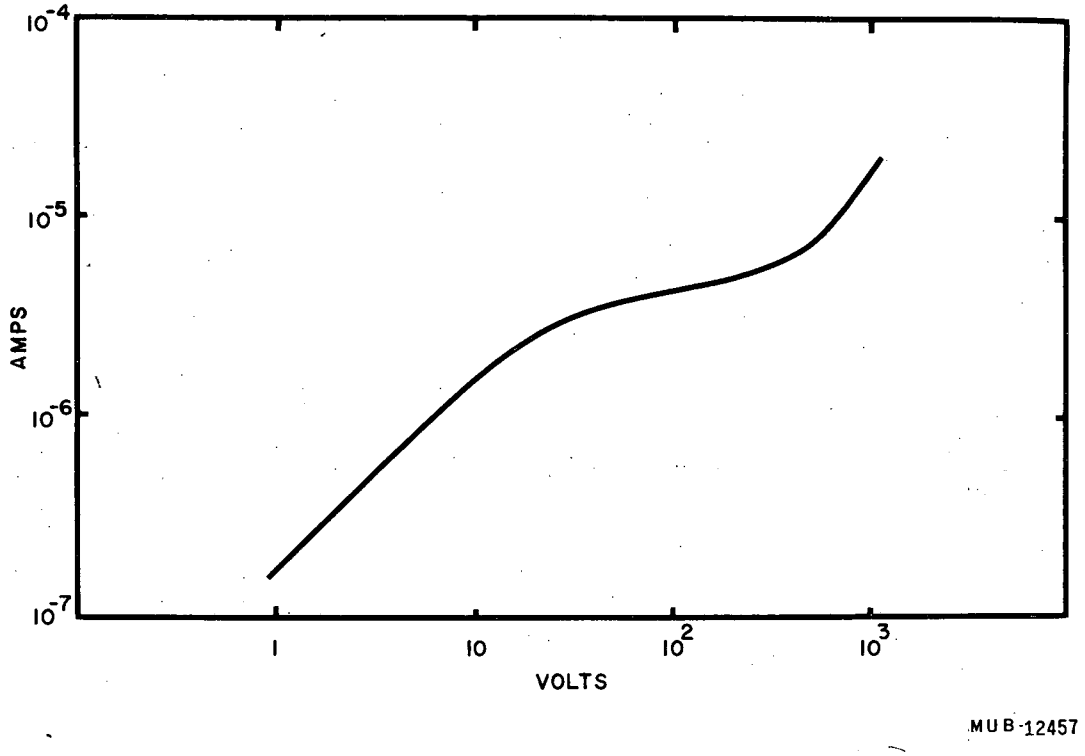

Fig. 2. V-I curve of a simple etched mesa device.

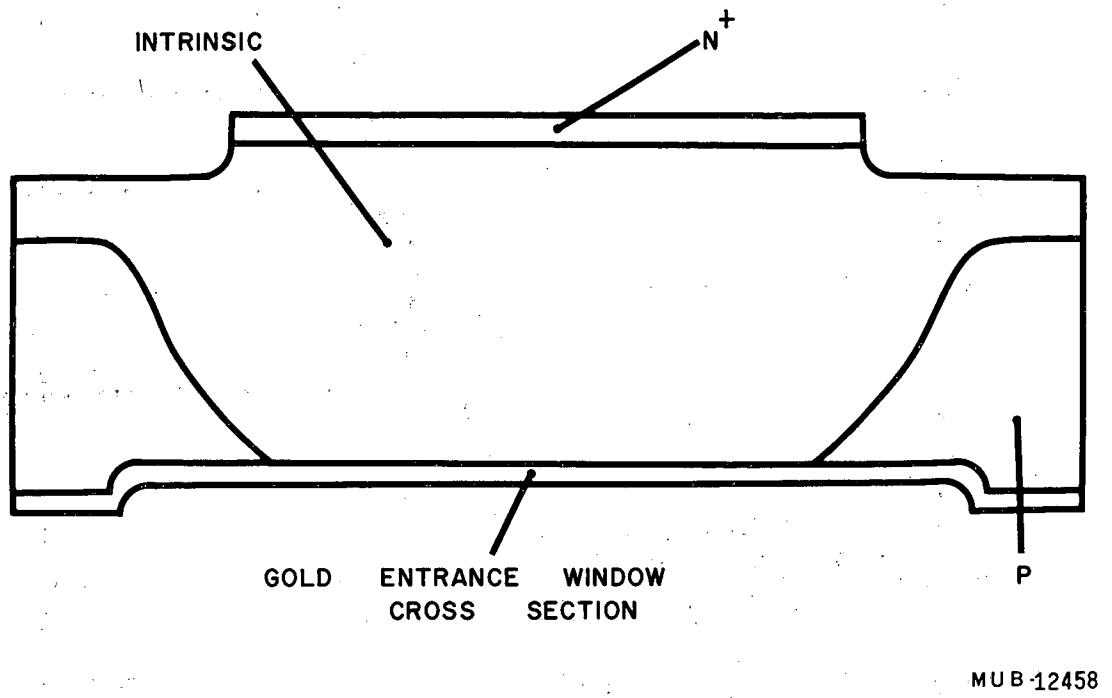

Fig. 3. Double-drift geometry - I.

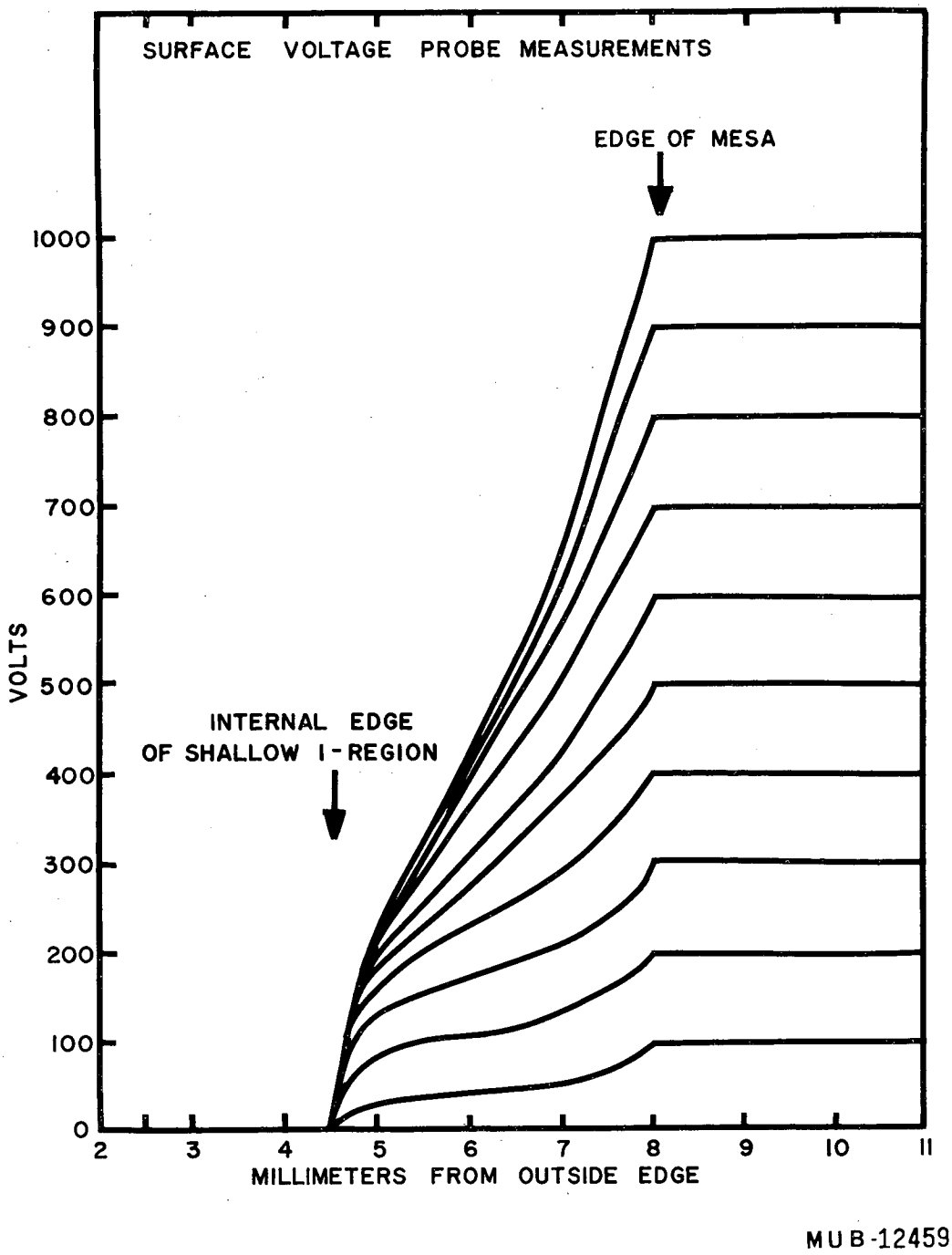

Fig. 4. Surface voltage probe curves for a double-drifted device.

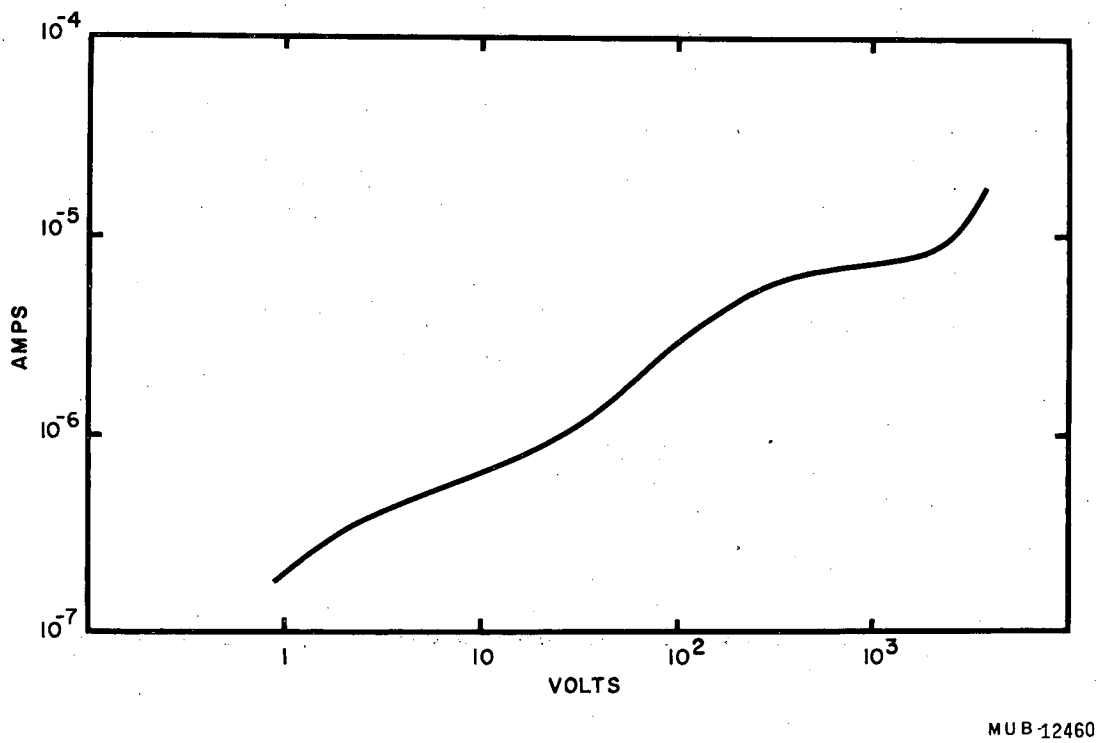

Fig. 5. V-I curve of a typical 3-mm-thick double-drifted device.

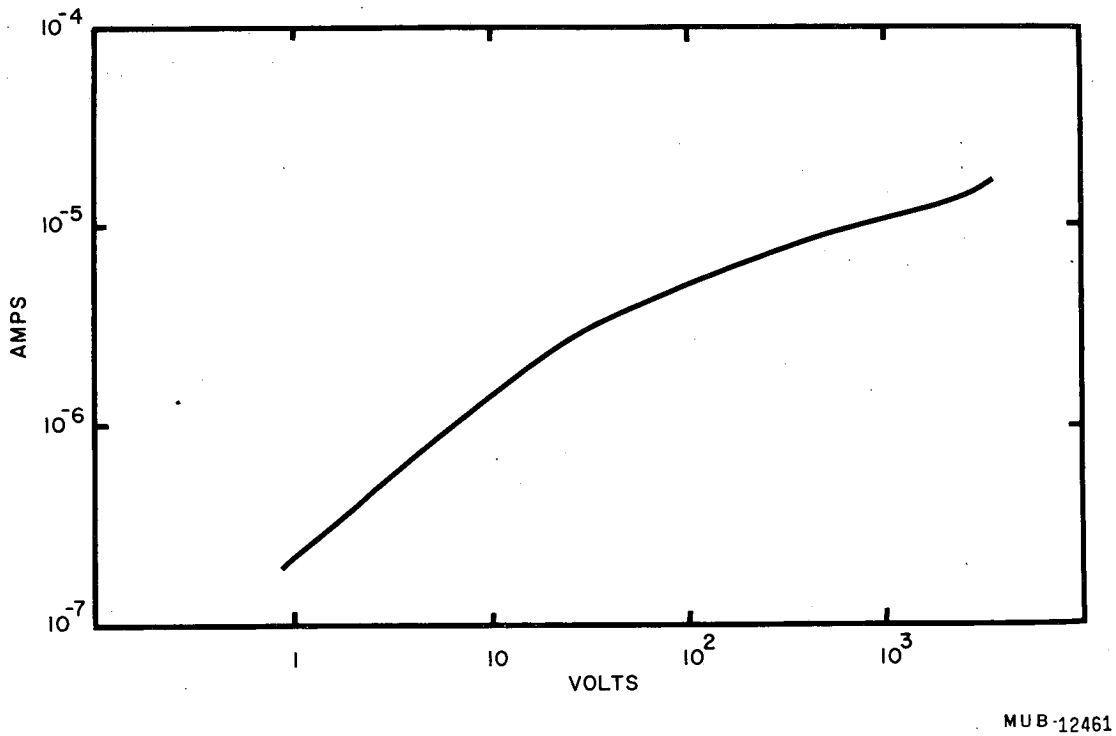

Fig. 6. V-I curve of a typical 5-mm-thick double-drifted device.

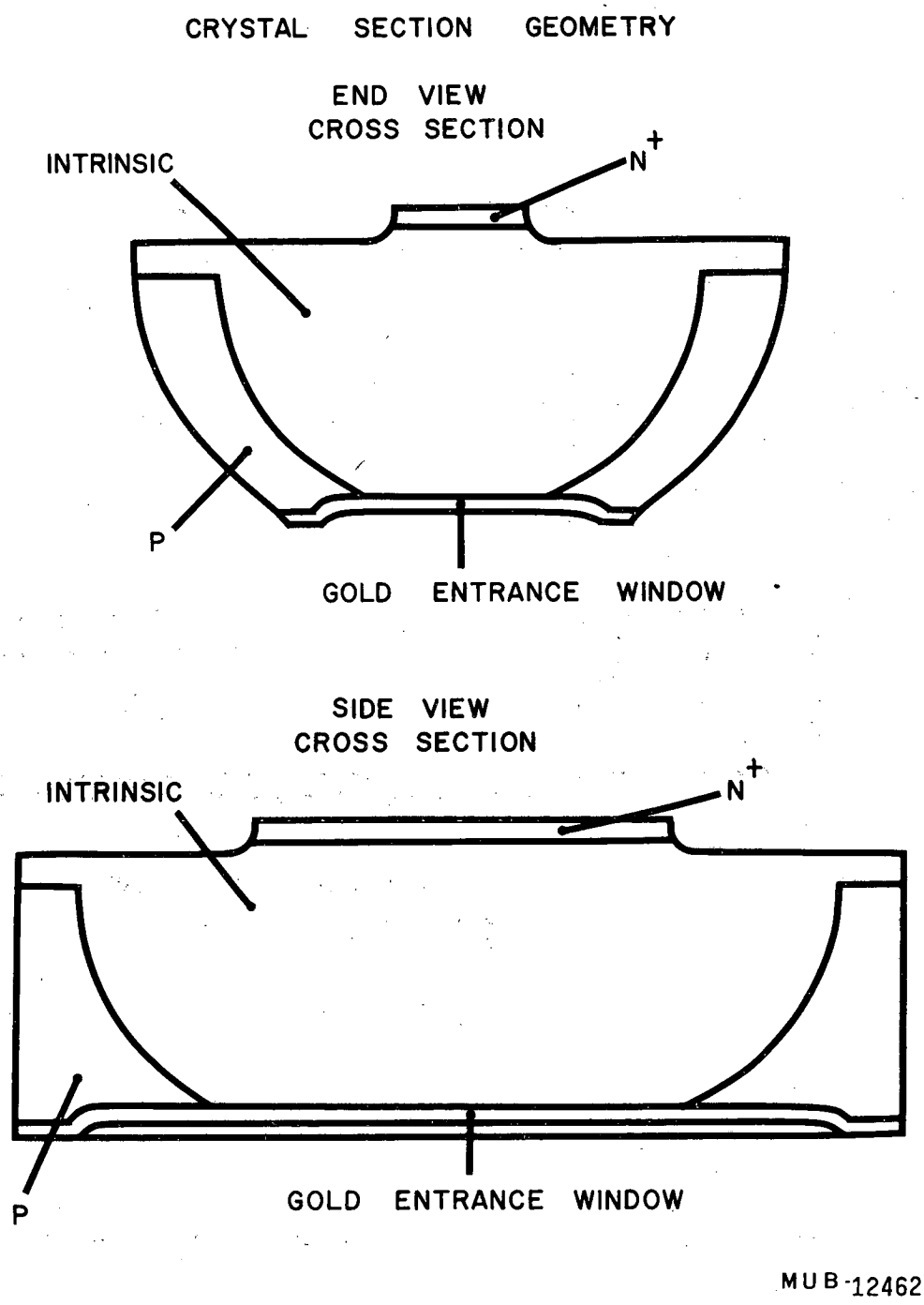

Fig. 7. Double-drift geometry - II.

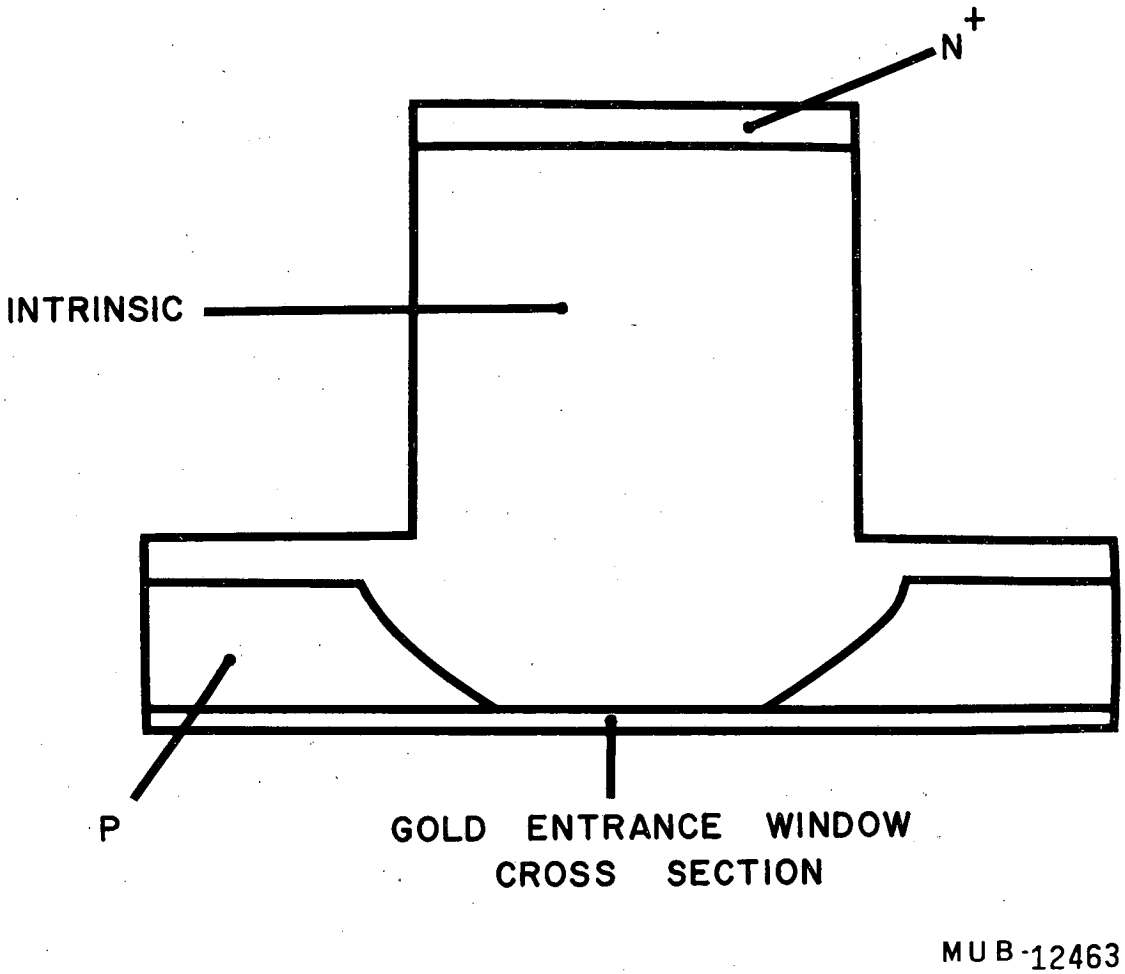

Fig. 8. Double-drift geometry - III, "the top hat."

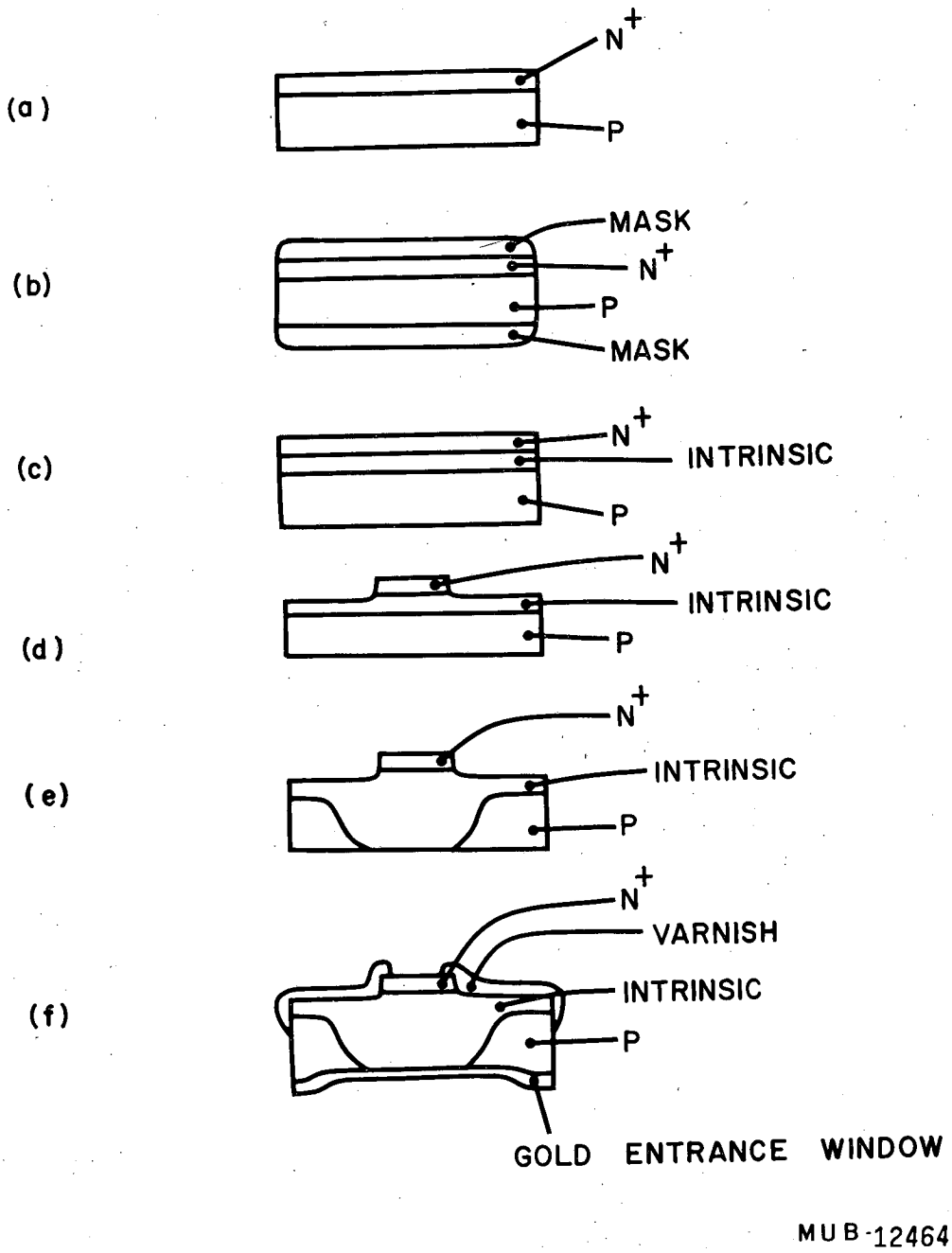

Fig. 9. Steps in double-drifted geometry production.

This report was prepared as an account of Government sponsored work. Neither the United States, nor the Commission, nor any person acting on behalf of the Commission:

A. Makes any warranty or representation, expressed or implied, with respect to the accuracy, completeness, or usefulness of the information contained in this report, or that the use of any information, apparatus, method, or process disclosed in this report may not infringe privately owned rights; or

B. Assumes any liabilities with respect to the use of, or for damages resulting from the use of any information, apparatus, method, or process disclosed in this report.

As used in the above, "person acting on behalf of the Commission" includes any employee or contractor of the Commission, or employee of such contractor, to the extent that such employee or contractor of the Commission, or employee of such contractor prepares, disseminates, or provides access to, any information pursuant to his employment or contract with the Commission, or his employment with such contractor.