UCRL-16734

University of California

Ernest O. Lawrence Radiation Laboratory

TWO-WEEK LOAN COPY

This is a Library Circulating Copy which may be borrowed for two weeks. For a personal retention copy, call Tech. Info. Division, Ext. 5545

IN-BEAM SPECTROSCOPIC STUDIES OF NEUTRON-DEFICIENT NUCLEI OF OSMIUM, PLATINUM, AND MERCURY

Berkeley, California

DISCLAIMER

This document was prepared as an account of work sponsored by the United States Government. While this document is believed to contain correct information, neither the United States Government nor any agency thereof, nor the Regents of the University of California, nor any of their employees, makes any warranty, express or implied, or assumes any legal responsibility for the accuracy, completeness, or usefulness of any information, apparatus, product, or process disclosed, or represents that its use would not infringe privately owned rights. Reference herein to any specific commercial product, process, or service by its trade name, trademark, manufacturer, or otherwise, does not necessarily constitute or imply its endorsement, recommendation, or favoring by the United States Government or any agency thereof, or the Regents of the University of California. The views and opinions of authors expressed herein do not necessarily state or reflect those of the United States Government or any agency thereof or the Regents of the University of California.

Submitted to Izvestiya Akademii Nauk, USSR

UCRL-16734

UNIVERSITY OF CALIFORNIA

Lawrence Radiation Laboratory
Berkeley, California

AEC Contract No. W-7405-eng-48

IN-BEAM SPECTROSCOPIC STUDIES OF NEUTRON-DEFICIENT NUCLEI OF OSMIUM, PLATINUM, AND MERCURY

J. Burde, R. M. Diamond, and F. S. Stephens

March 1966

IN-BEAM SPECTROSCOPIC STUDIES OF NEUTRON-DEFICIENT NUCLEI OF OSMIUM, PLATINUM, AND MERCURY*

J. Burde,** R. M. Diamond,† and F. S. Stephens

Lawrence Radiation Laboratory
University of California
Berkeley, California
U.S.A.
March 1966

This work is a continuation of the study described last year at the Minsk Conference.[1] We observe the gamma rays and conversion electrons occurring after neutron emission in heavy-ion reactions. The most important results from the initial study[2] of nine neutron-deficient even-even isotopes of Yb, Hf, and W were: 1) In general, only ground-state-band rotational (E2) transitions were observed in appreciable intensity; 2) the rotational constant, $A_I = \frac{E_I - E_{I-2}}{4I - 2}$ decreases by about a factor of 2 as the spin, I, increases from 2 to 16; 3) although the $2 \rightarrow 0$ transitions differed by as much as a factor of 1.7 in energy, the high spin transitions were very similar in energy ($14 \rightarrow 12$ transitions had a maximum spread of ~12%).

We concluded that a rotation-vibration interaction played a major role in this behavior, and that the β-vibrational band-ground band interaction was most important. This corresponds classically to centrifugal stretching of the nucleus, and so we applied the model of Davydov and Chaban,[3] ignoring the γ-vibrational band interaction by setting $\gamma = 0$. These calculations gave very good fits to the ground-band energies, and they also allowed reasonably good predictions of β-bandhead energies in about 15 known cases. A numerical evaluation of this model by Davidson and Davidson[4] allows comparisons of β-band E2 branching

ratios; the data are scanty, but in general agreement. The model also allows calculation of the ratio of the Coulomb excitation B(E2)'s from the ground state to the β-band 2+ level and to the ground-band 2+ level. Here the data are again scanty, but there are significant deviations from the theory; some of the calculated B(E2)'s to the β-band are as much as twice the experimental values. We would like to offer a possible explanation for at least part of this discrepancy. When the β-band lies above 1 MeV, it does not remain pure but mixes with two-quasiparticle states above the pairing gap. This spreads the collective B(E2) over several states, and reduces its value to the β-band. However, this essentially does not effect the branching ratios from the β-band, and does not greatly reduce the magnitude of the ground-band deviations.

The agreement found between model and experiment suggests to us that there probably is some validity to the idea of centrifugal stretching of nuclei, and led us to consider whether improvements could be made on the basic assumptions of the model. There are three main assumptions: 1) the potential energy of deformation is quadratic in β, $V = 1/2\ C\ (\beta-\beta_0)^2$; 2) the rotational moment of inertia, $\mathfrak{J}$, is quadratic in β; 3) there is no significant static (or dynamic) non-axial deformation, $\gamma = 0$.

The first assumption is not too realistic, as the potential must turn down at the fission barrier. We believe it would be better to use a potential such as that from Swiatecki's mass formula.[5,6] This leads to very similar (good) ground-band energy calculations for strongly deformed nuclei, and improved values for the less deformed nuclei.

For the ground states of different nuclei, the moment of inertia does seem to be proportional to β^2. But we are interested in how $\mathfrak{J}$ changes in a particular nucleus with increasing spin. Pairing considerations suggest that the Coriolis effect will reduce the pairing and hence increase the value of $\mathfrak{J}$ faster than the ground-state proportionality with β^2. However, the good agreement observed between experiment and the simple theory suggests that the increase in $\mathfrak{J}$ with β will not be much steeper than is observed among the ground states of different nuclei. This problem can be solved experimentally by measuring the quadrupole moments of excited states, and theoretically by a microscopic calculation in which the Coriolis effects are treated in a self-consistent way allowing for a simultaneous change in deformation. Both of these approaches are in the process of being carried out at various laboratories.

Finally, the assumption that $\gamma = 0$, the neglect of the γ-band interactions, suggests that the whole picture may break down for those nuclei where the γ-vibrational band becomes low in energy and so does mix with the ground-band, as, for example, with nuclei approaching spherical shape.

This is just the region of the new data. We have studied gamma-ray and conversion electron spectra from the de-excitation cascades of 9 neutron-deficient isotopes of Os, Pt, and Hg made by heavy-ion irradiation. Figure 1 shows typical spectra, the conversion electron and gamma-ray spectra of ^{188}Pt. There are significant differences from the earlier study. The situation appears more complicated; the main transitions seem to be E2's connecting the highest-spin members of vibrational multiplets, but there are also other transitions of multipolarity

different from E2, e.g., the 412-keV radiation is M1 and the 582-keV one is E1. In Table I, we list the main (collective) E2 transitions which form quasirotational bands in the nuclei studied. An obvious difference from the previous study is that the spins observed do not reach as high values. Why not? We would like to offer the following suggestion. In the Hg nuclei, the spin = 6 level comes at 1.5 - 2.0 MeV, that is, at the pairing gap. But since two-quasiparticle states exist above the gap with spins as high as 10, they can provide alternate pathways by which an excited nucleus can de-excite to the ground-band I=6 level rather than by going thru the ground-band I=10 and 8 levels. If there are many such branches, we cannot observe the individual transitions; we only observe the unique path to ground furnished below the gap by the ground-band levels. Among the spherical vibrational nuclei this means we see levels only up to spin 6 or 8, but as one proceeds toward the deformed rotational nuclei, the collective transitions become of lower energy and so the ground-state band is at a higher spin level at the gap. With the rotors previously studied, the two-quasiparticle states do not have high enough spins to compete with the de-excitation down the ground-state rotational band, and only the four-quasiparticle states at 3-4 MeV with spins of 16-20 can begin to compete with the ground-band members at this excitation energy. This may be the reason we see no spin higher than 20 even though the compound nucleus formed in the heavy-ion reaction may have spins greater than this value.

Figure 2 shows a plot of the rotational constants, A_I, vs the spin, I, for the nuclei studied. The position of the previous set of

nine nuclei is represented by the two little circles. Six of the new nuclei studied do converge by spin 12 to the common curve of the earlier nuclei, even though they may be little deformed initially and have much higher-lying first excited states. That is, these nuclei are very soft towards deformation and, under rotation, they stretch rapidly out to the shape of the initially more deformed, but more rigid, good rotors. (This type of behavior is predicted at least qualitatively, by the use of the Swiatecki mass-formula potential.) But some nuclei do not approach the common curve at high spin. For example, the heavier osmium isotopes do not. They start with large rotational constants at low spin and these values do not decrease fast enough with increase in spin to come to the common curve. But it is known that in just these nuclei the γ-vibrational band drops from greater than 1 MeV to become the second excited state in ^{192}Os at 489 keV. We believe these two features are related. Nuclei with low-lying γ-vibrational bands have a shallow region in the potential energy surface for $\gamma \neq 0$, rather than the minimum for $\gamma = 0$ of the prolate deformed nuclei. They are soft towards nonaxial stretching, as well as along the axis, and the effects of nonaxial stretching under rotation might be expected to lead to a different behavior than that of the nuclei easily deformed along the symmetry axis only, that is, the majority of the nuclei already studied. From Fig. 2, it can be seen that a similar change in the A_I vs I curve occurs between ^{186}Pt and ^{188}Pt, but more abruptly, and we tentatively suggest that the γ-band interaction becomes important for Pt nuclei at this point. If the proper potential energy surface

and moment of inertia can be determined, then one should be able to calculate B(E2)'s as well as the ground-band energy levels and vibrational bandheads for these more complicated cases also, but it is just beginning to appear possible to do this.[7]

It should be pointed out that the macroscopic phenomenological model exemplified by Davydov-Chaban, or a modification as described above, is not in antagonism with a detailed microscopic calculation. Whatever there is of validity in the phenomenological model must also appear in the microscopic calculation, if the latter is realistic, but such calculations seem very complicated at present.

In three of the twenty nuclei studied so far we have observed millisecond isomers by looking between the Hilac beam bursts. These are in ^{180}W, ^{182}Os, and ^{184}Pt. The first two have been studied previously,[8,9] but our data are more complete and with the data on the new ^{184}Pt isomer allow a better understanding of the nature of these isomers. Figures 3 and 4 show the conversion electron and the (Ge detector) gamma-ray spectra of ^{182m}Os, and Figs. 5 and 6 show the spectra of ^{184m}Pt.

All three isomers have a main decay sequence consisting of a highly K-forbidden E1 followed by four E2 transitions. We have established the spin and parity of the isomeric states to be 8- from angular distribution studies and from the E1 nature of the decay to the ground-band level. These main decay sequences are shown in Fig. 7 along with those of two other 106-neutron isotones, ^{176}Yb and ^{178}Hf. This last nucleus has two 8- states at 1480 and at 1148 keV which have been assigned as two-neutron and two-proton particle states, respectively.[10]

Gallagher and Soloviev have found good agreement between these energies and calculated values obtained by applying pairing correlations to a deformed core.[11] The neutron configuration assignment {9/2+[624], 7/2-[514]} is supported by the systematic occurrence of the 8- level in the three nuclei studied in this work as well as in ^{176}Yb (Ref. 12). The characteristics of all these isomeric states are listed in Table II. It can be seen that there is a mild relaxing in the hindrance factor on going from the deformed ^{176}Yb to the more spherical ^{182}Os, as would be expected from the decreasing validity of the K-quantum number. Why ^{184m}Pt should reverse this trend is not clear to us, but may indicate the presence of other selection rules in spherical nuclei. It is also noteworthy that the reduced transition probabilities of the E1 decays from the two-neutron states are 10^3-10^4 larger than that from the two-proton level in ^{180}Hf.

As is clear from the spectra, the decay of ^{184m}Pt is more complex than those of the other two nuclei studied. Although ^{182m}Os has a few percent branching decay through other than the main sequence, this was too little for us to study. But ^{184m}Pt has about half its de-excitation through two side-branches. By energy sums and coincidence experiments we have determined the partial scheme shown in Fig. 8. Three or four additional transitions seem to define two more levels of the right-hand band in Fig. 8, but are not included because of some uncertainty in their placement. There is no space here for the arguments, but we believe the 1229- and 839-keV levels are the 4+ and 2+ levels of the β-band, and that the 7+ level at 1724 keV is a member of the γ-band. If so, the vibrational bandheads are quite low, approaching 700 keV. It is of interest to mention that the simple Davydov-Chaban

model with $\gamma = 0$ described earlier predicts these β-vibrational levels at the energies observed, if the reasonable assumption is made that they should be characterized by the same values of γ, the nonadiabaticity parameter, as the ground-band levels of comparable energy. The ground-band energies themselves are not obtained in very good agreement with the experimental values, and we believe this is due principally to the inadequacy of the quadratic potential energy curve of deformation, and to neglect of the low-lying γ-band by the assumption $\gamma = 0$. The Swiatecki potential might help the first problem, but a much more sophisticated treatment involving the dynamic variation in γ must be used to handle the second.

Finally, we would like to mention that we have been studying the angular distribution of these cascade gamma rays with respect to the beam direction.[13] They are markedly anisotropic. Dr. Barleet has calculated semiclassically the maximum anisotropy to be expected in the rotational cascade from aligned (m=0) compound nuclei under certain conditions.[14] He gets anisotropy values of $\epsilon = \frac{I(0^\circ) - I(90^\circ)}{I(90^\circ)} \sim 0.6$. We have observed values of $0.3 \lesssim \epsilon \lesssim 0.6$ for the various rotational (and vibrational) transitions in seven nuclei.

Table 1

Ground-state (quasi-) rotational band transitions

Transition (rel. inten)	^{178}Os	^{180}Os	^{182}Os	^{182}Pt	^{184}Pt	^{186}Pt	^{188}Pt	^{188}Hg	^{190}Hg
2 → 0	131.6 A (100)	132.2 A (100)	126.9 A (100)	153.7 A (b)	162.1 A (100)	191.1 A (100)	265.9 A (100)	412.6 A (111)	416.4 A (100)
4 → 2	266.1 A (94)	276.3 A (88)	273.3 A (92)	262.5 A	272.7 A (87)	298.5 A (98)	405.4 A (84)	589.9 A (84)	625.1 A (108)
6 → 4	363.1 A (89)	386.6 A (74)	393.7 A (70)	355.2 A	362.5 A (66)	387.2 A (65)	513.3 A (53)		730.2 A (91)
8 → 6	432.9 A (79)	462.2 A (72)	483.0 A (63)	431.0 A	431.6 A (58)	464.3 A (51)	597.7 B* (27)		
10 → 8	488.0 A (43)	510.2 A (42)	532.7 A (44)	493 B	475.8 A (55)	514.6 A (43)	654.0 B (18)		
12 → 10	536.8 B (28)	541.0 A (34)		543 B	521.5[c] (47)	551 B (9)			
14 → 12		566.4 B (25)			554[c] (29)				

[a]Energies are expected to be accurate to ±0.25% and intensities to ~20%.

[b]This spectrum was not sufficiently clean to give intensities accurate to 20%.

[c]Assignment uncertain.

Table V. The energies, configurations, and E1 hindrance factors for the 8- levels.

	^{184}Pt	^{182}Os	^{180}W	^{180}Hf[a]	^{178}Hf[a]	^{178}Hf[a]	^{176}Yb[b]
Level	1838	1832	1525	1172	1480	1148	1038
Configuration	$[624\uparrow+514\downarrow]_{nn}$	$[624\uparrow+514\downarrow]_{nn}$	$[624\uparrow+514\downarrow]_{nn}$	$[404\downarrow+514\uparrow]_{pp}$	$-A[404\downarrow+514\uparrow]_{pp}$ $+\sqrt{1-A^2}[624\uparrow+514\downarrow]_{nn}$	$\sqrt{1-A^2}[404\downarrow+514\uparrow]_{pp}$ $+A[624\uparrow+514\downarrow]_{nn}$	$[624\uparrow+514\downarrow]_{nn}$
Transition energy (keV)	610	554	390	57.6	(420)	88.8	93
% of decay	~50	~95	100	81		100	100
$T_{1/2}$ (sec)	1.01×10^{-3}	7.8×10^{-4}	5.2×10^{-3}	1.98×10^{4}		4	11.7
$(1 + \alpha)$	1.00	1.01	1.01	1.30		1.50	1.39
Hindrance over s.p.[c]	2.13×10^{12}	6.5×10^{11}	1.44×10^{12}	2.8×10^{16}		1.9×10^{13}	5.9×10^{13}

[a] Nuclear Data Sheets, Nuclear Data Group, Oak Ridge National Laboratory, Oak Ridge, Tennessee.

[b] M. Vergnes, G. Rotbard, G. Ronsin, and J. Kalifa, Phys. Letters 18, 325 (1965).

[c] The single proton transition-probability is calculated as $1.0 \times 10^{14} A^{2/3} E_\gamma^3 S$ where E_γ is in MeV and S is taken as unity. The expression is from S. A. Moszkowski, Theory of Multipole Radiation, in Alpha-, Beta-, and Gamma-Ray Spectroscopy, Vol. 2, Ed. by K. Siegbahn, (North-Holland Publishing Co., Amsterdam, 1965) Chapter XV, page 881.

FOOTNOTES AND REFERENCES

*This work was done under the auspices of the U. S. Atomic Energy Commission.

**Permanent address: Physics Department, The Hebrew University, Jerusalem, Israel.

†Presented paper at 16th Annual Nuclear Spectroscopy Conference, Moscow.

1. R. M. Diamond, N. L. Lark, and F. S. Stephens, Izv. A. N. (ser. fiz.) 29, 1070 (1965).
2. F. S. Stephens, N. L. Lark, and R. M. Diamond, Phys. Rev. Letters 12, 255 (1964); Nucl. Phys. 63, 82 (1965).
3. A. S. Davydov and A. A. Chaban, Nucl. Phys. 20, 499 (1960).
4. J. P. Davidson and M. G. Davidson, Phys. Rev. 138, B316 (1965).
5. W. D. Myers and W. J. Swiatecki, Lawrence Radiation Laboratory Report, UCRL-11980 (1965).
6. R. M. Diamond, F. S. Stephens, and W. J. Swiatecki, Phys. Letters 11, 315 (1964).
7. K. Kumar, Bull. Am. Phys. Soc. 10, 1107 (1965).
8. S. D. Softky, Phys. Rev. 98, 736 (1955); V. V. Remaev, Yu. S. Korda, and A. P. Klyucharev, Bull. Acad. Sci. USSR (translation) 27, 133 (1965); S. Bjørnholm, Niels Bohr Institute, Copenhagen, private communication, March, 1964.
9. N. L. Lark and H. Morinaga, Nucl. Phys. 63, 466 (1965).
10. C. J. Gallagher and H. L. Nielsen, Phys. Rev. 126, 1520 (1962) and references given therein.
11. C. J. Gallagher and V. G. Soloviev, Kgl. Danske Videnskab. Selskab, Mat. Fys. Skrifter 2, No. 2 (1962).

12. J. Kantele, Phys. Letters 2, 293 (1963); M. Vergnes, G. Rotbard, G. Ronsin, and J. Kalifa, Phys. Letters 18, 325 (1965); S. Bjørnholm, Niels Bohr Institute, Copenhagen, private communication, January, 1966.

13. R. M. Diamond, K. Kotajima, E. Matthias, J. Newton, S. Newton, and F. S. Stephens, to be published.

14. E. M. Barleet, J.I.N.R. (Dubna) Report No. 2197 (1965).

Figure Captions

Fig. 1. Conversion electron (upper) and (lithium-drifted Ge) gamma-ray (lower) spectra of ^{188}Pt taken in-beam.

Fig. 2. Plot of the transition rotational constant, $A_I = \frac{E_I - E_{I-2}}{4I - 2}$, (on a logarithmic scale) vs the spin I.

Fig. 3. Conversion electron spectrum of ^{182m}Os. The long-lived background has been subtracted.

Fig. 4. Gamma-ray spectrum of ^{182m}Os taken with a lithium-drifted Ge detector. The long-lived background has been subtracted.

Fig. 5. Conversion electron spectrum of ^{184m}Pt. The long-lived background has been subtracted.

Fig. 6. Gamma-ray spectrum of ^{184m}Pt taken with a lithium-drifted Ge detector. The long-lived background is not subtracted, but is shown as a thin solid curve.

Fig. 7. Basic decay schemes of the five 106-neutron isomers.

Fig. 8. Decay scheme of ^{184m}Pt.

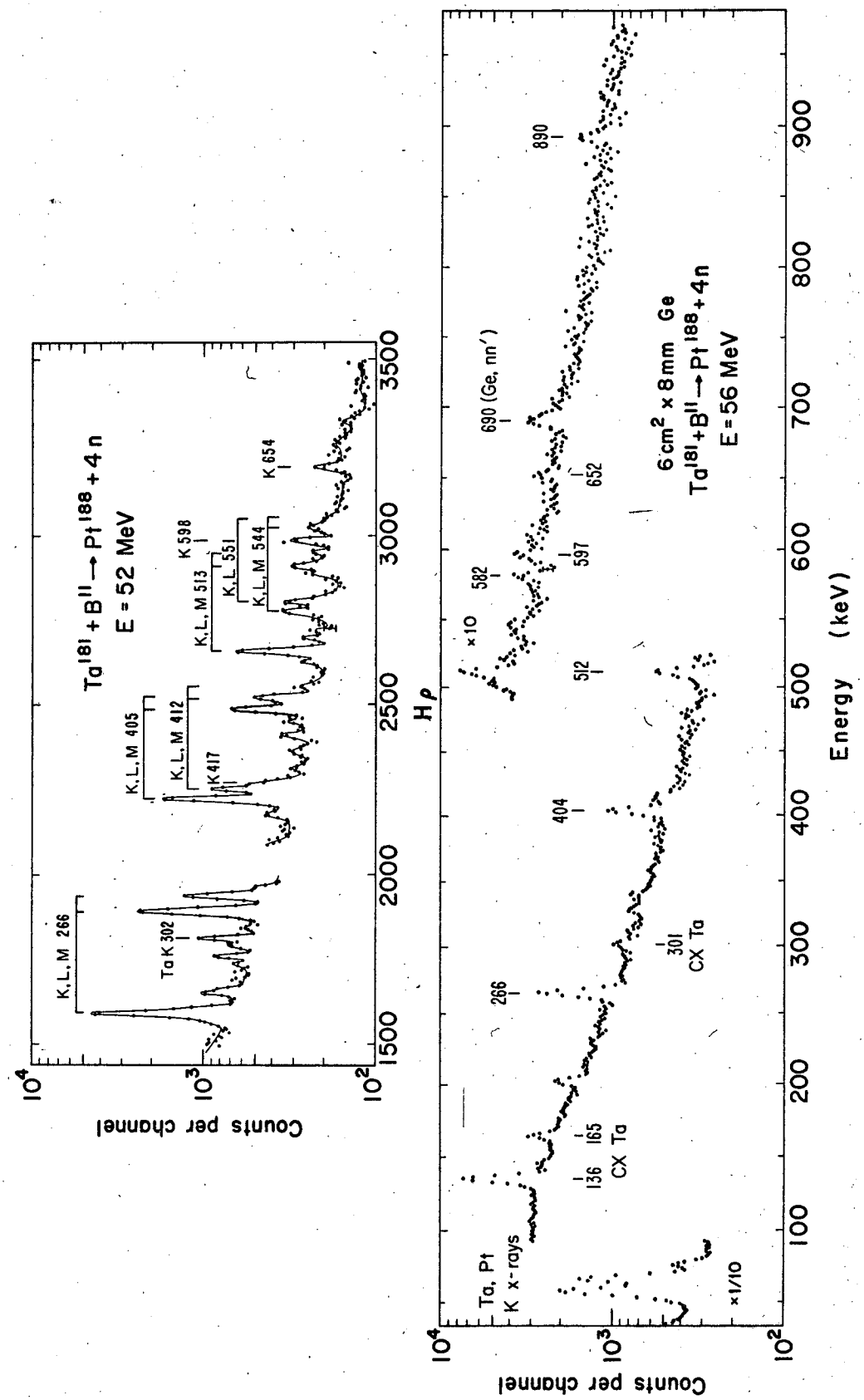
Ta181 + B11 → Pt188 + 4 n
E = 52 MeV
K, L, M 266
Ta K 302
K, L, M 405
K, L, M 412
K417
K, L, M 513
K 598
K, L, 551
K, L, M 544
K 654
Counts per channel
Hρ
6 cm2 x 8 mm Ge
Ta181 + B11 → Pt188 + 4 n
E = 56 MeV
690 (Ge, nn')
890
582
597
652
512
404
266
301
CX Ta
136
165
CX Ta
Ta, Pt
K x-rays
×10
×1/10
Counts per channel
Energy (keV)

Fig. 1

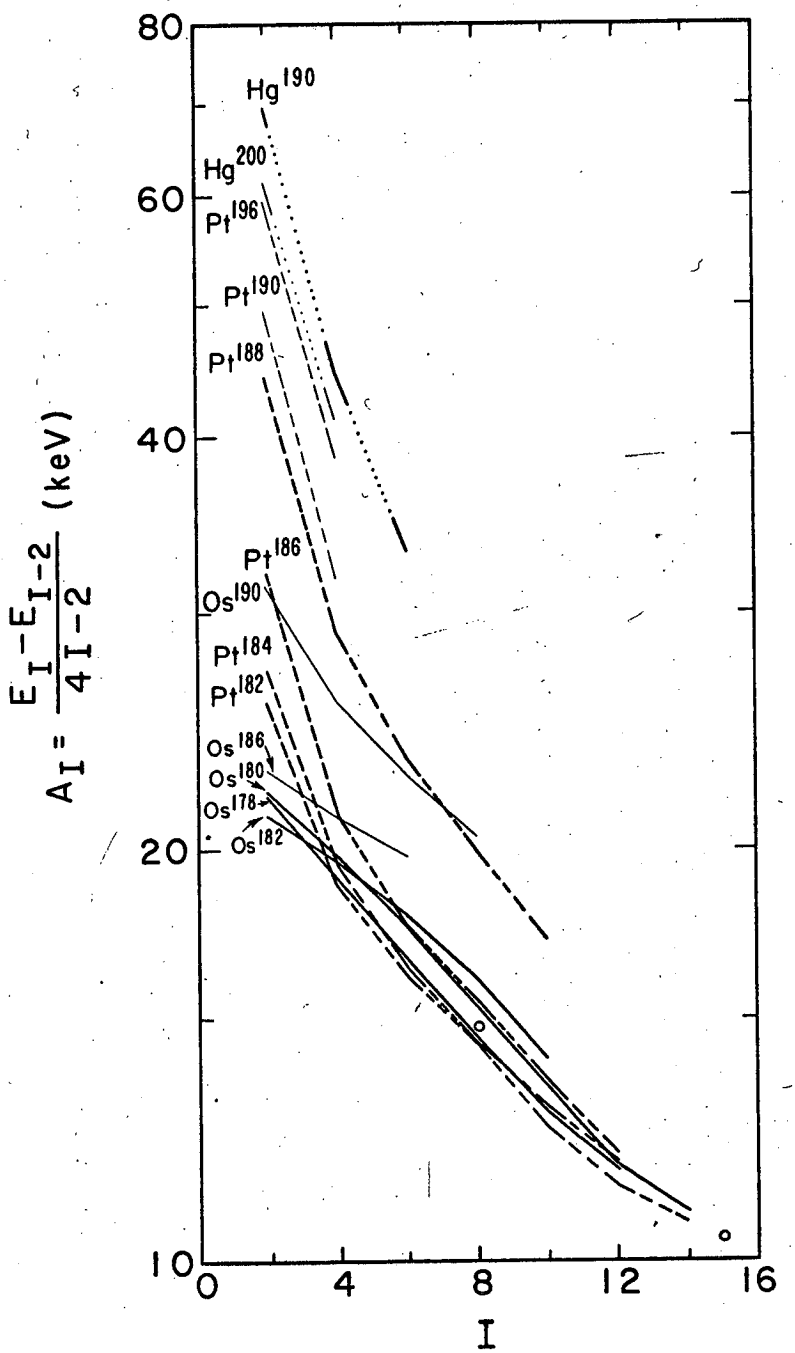

MUB-6521

Fig. 2

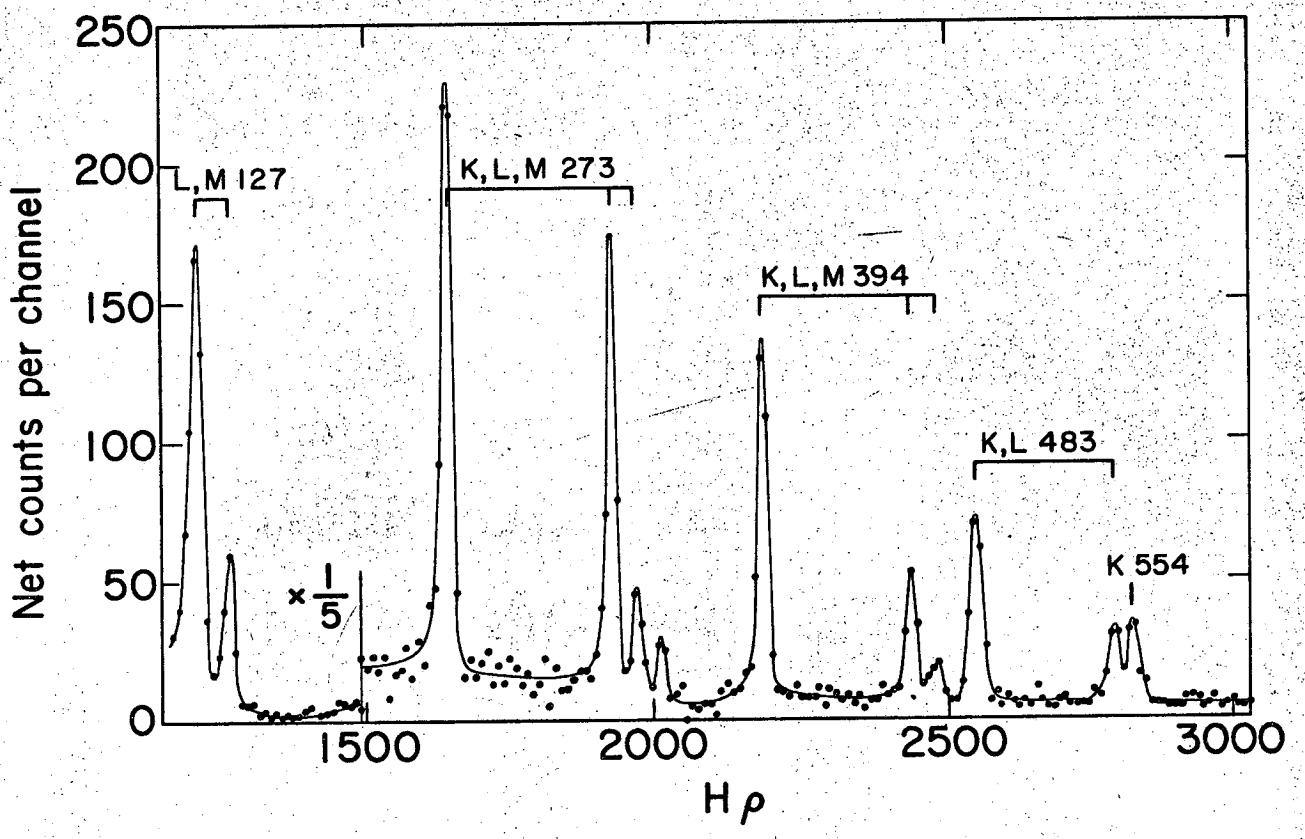

Fig. 3

MUB-6273

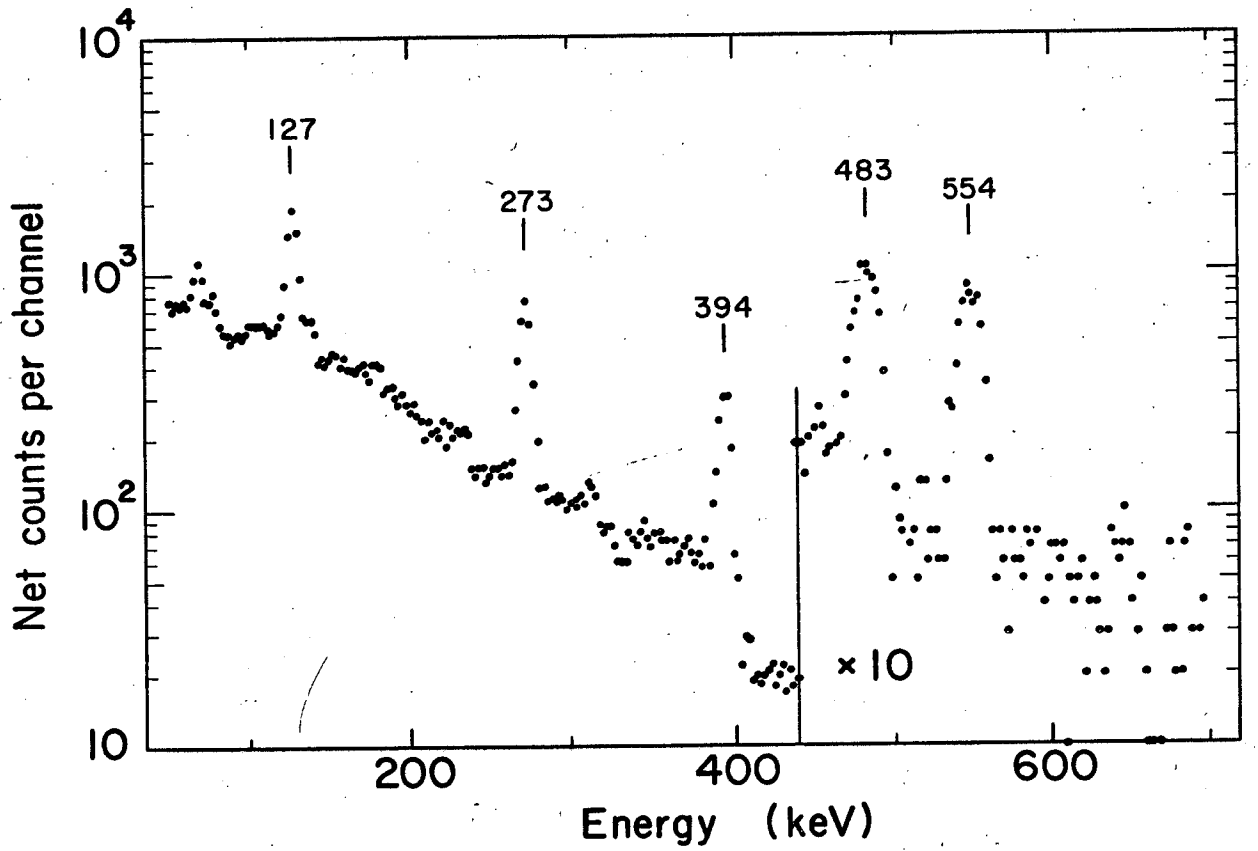

Fig. 4

MUB-6272

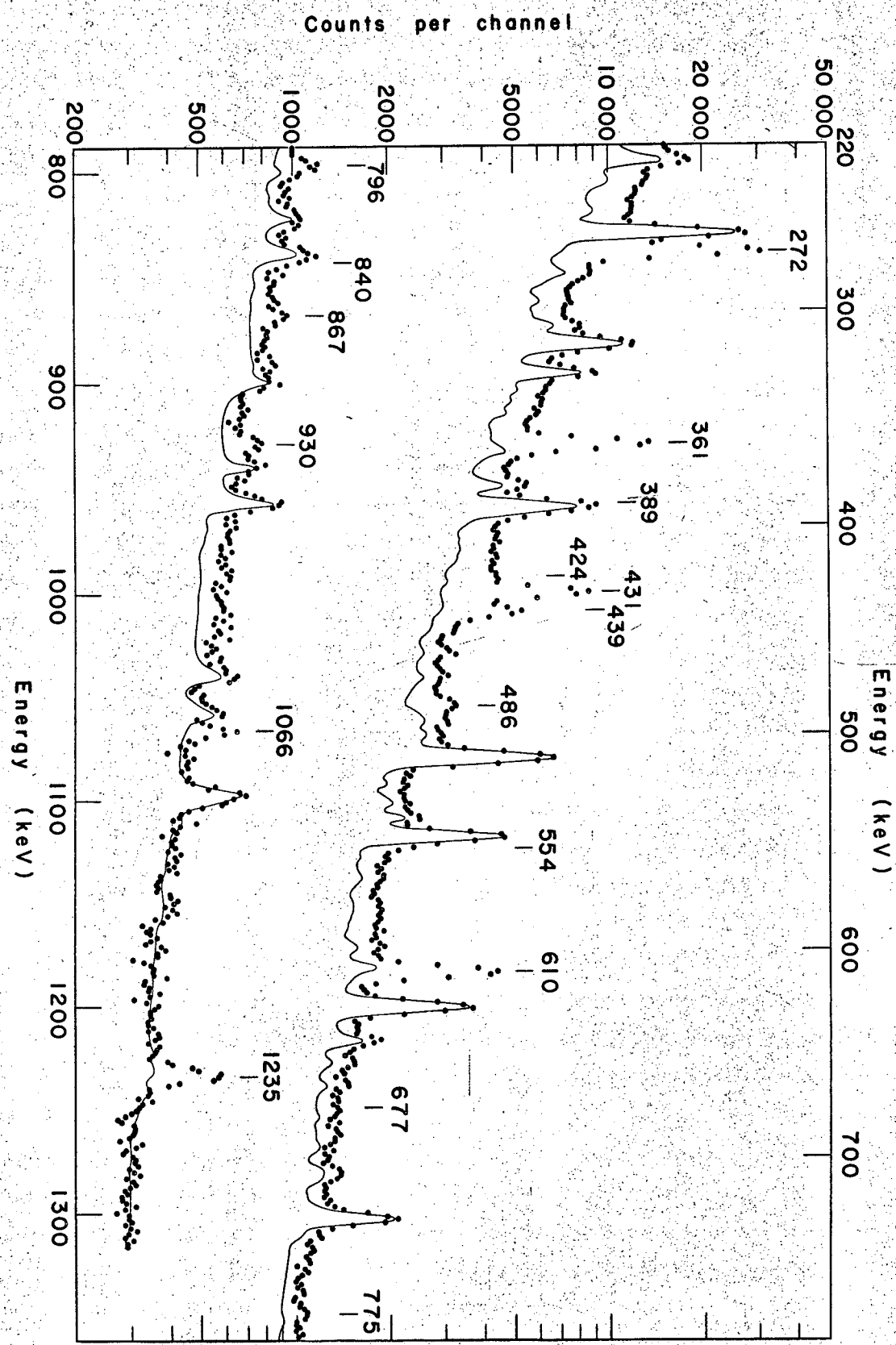
Counts per channel
50 000
20 000
10 000
5000
2000
1000
500
200
Energy (keV)
220
300
400
500
600
700
272
361
389
424
431
439
486
554
610
677
775
796
840
867
930
1066
1235
800
900
1000
1100
1200
1300
Energy (keV)

Fig. 6

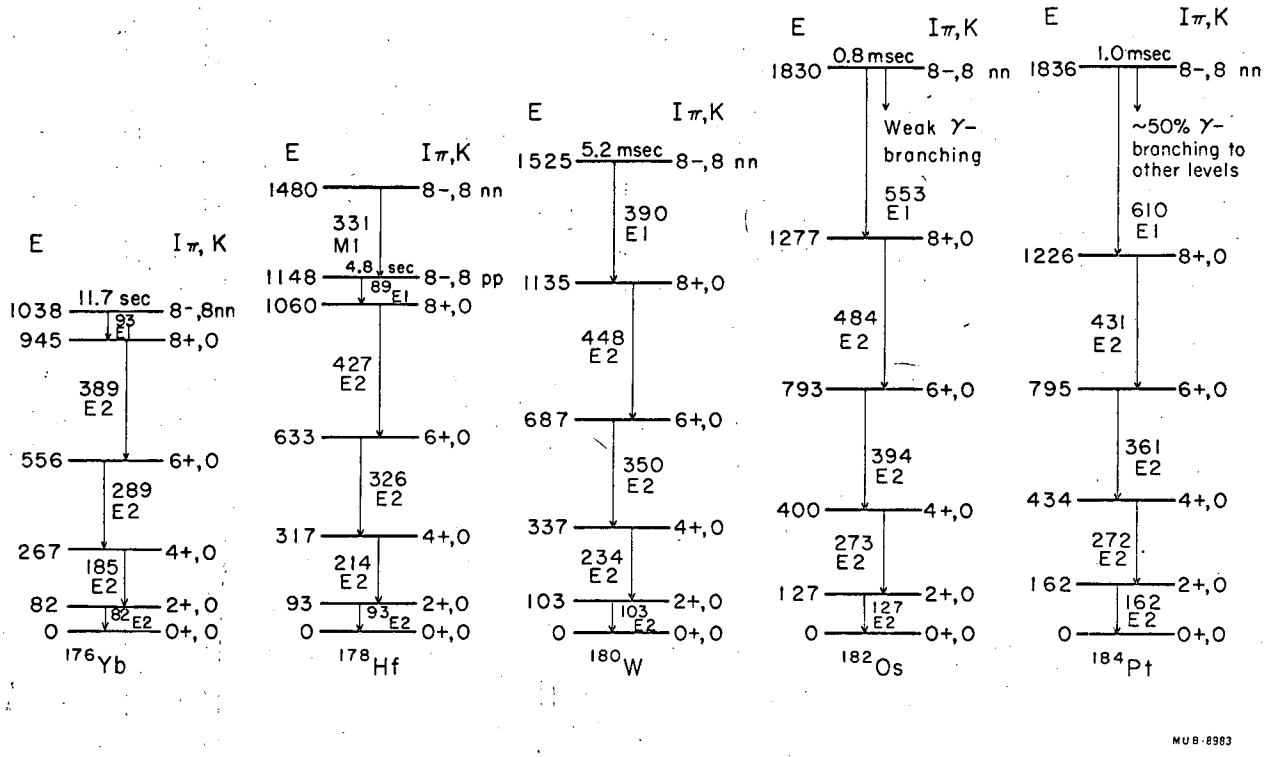
E
Iπ, K
1038
11.7 sec
8-,8nn
93 E1
945
8+,0
389 E2
556
6+,0
289 E2
267
4+,0
185 E2
82
2+,0
82 E2
0
0+,0
176Yb
E
Iπ,K
1480
8-,8 nn
331 M1
1148
4.8 sec
8-,8 pp
89 E1
1060
8+,0
427 E2
633
6+,0
326 E2
317
4+,0
214 E2
93
2+,0
93 E2
0
0+,0
178Hf
E
Iπ,K
1525
5.2 msec
8-,8 nn
390 E1
1135
8+,0
448 E2
687
6+,0
350 E2
337
4+,0
234 E2
103
2+,0
103 E2
0
0+,0
180W
E
Iπ,K
1830
0.8 msec
8-,8 nn
Weak γ-branching
553 E1
1277
8+,0
484 E2
793
6+,0
394 E2
400
4+,0
273 E2
127
2+,0
127 E2
0
0+,0
182Os
E
Iπ,K
1836
1.0 msec
8-,8 nn
~50% γ-branching to other levels
610 E1
1226
8+,0
431 E2
795
6+,0
361 E2
434
4+,0
272 E2
162
2+,0
162 E2
0
0+,0
184Pt
MUB-8983

Fig. 7

This report was prepared as an account of Government sponsored work. Neither the United States, nor the Commission, nor any person acting on behalf of the Commission:

A. Makes any warranty or representation, expressed or implied, with respect to the accuracy, completeness, or usefulness of the information contained in this report, or that the use of any information, apparatus, method, or process disclosed in this report may not infringe privately owned rights; or

B. Assumes any liabilities with respect to the use of, or for damages resulting from the use of any information, apparatus, method, or process disclosed in this report.

As used in the above, "person acting on behalf of the Commission" includes any employee or contractor of the Commission, or employee of such contractor, to the extent that such employee or contractor of the Commission, or employee of such contractor prepares, disseminates, or provides access to, any information pursuant to his employment or contract with the Commission, or his employment with such contractor.