UCRL-16746

University of California

Ernest O. Lawrence Radiation Laboratory

TWO-WEEK LOAN COPY

This is a Library Circulating Copy which may be borrowed for two weeks. For a personal retention copy, call Tech. Info. Division, Ext. 5545

MASS TRANSFER AND POLARIZATION AT A ROTATING DISK ELECTRODE

Berkeley, California

DISCLAIMER

This document was prepared as an account of work sponsored by the United States Government. While this document is believed to contain correct information, neither the United States Government nor any agency thereof, nor the Regents of the University of California, nor any of their employees, makes any warranty, express or implied, or assumes any legal responsibility for the accuracy, completeness, or usefulness of any information, apparatus, product, or process disclosed, or represents that its use would not infringe privately owned rights. Reference herein to any specific commercial product, process, or service by its trade name, trademark, manufacturer, or otherwise, does not necessarily constitute or imply its endorsement, recommendation, or favoring by the United States Government or any agency thereof, or the Regents of the University of California. The views and opinions of authors expressed herein do not necessarily state or reflect those of the United States Government or any agency thereof or the Regents of the University of California.

J. Phys. Chem.

UCRL-16746

UNIVERSITY OF CALIFORNIA

Lawrence Radiation Laboratory
Berkeley, California

AEC Contract No. W-7405-eng-48

MASS TRANSFER AND POLARIZATION AT A ROTATING DISK ELECTRODE

Limin Hsueh and John Newman

March, 1966

Mass Transfer and Polarization at a Rotating Disk Electrode

Limin Hsueh and John Newman
Inorganic Materials Research Division,
Lawrence Radiation Laboratory, and
Department of Chemical Engineering
University of California, Berkeley

March, 1966

Abstract

Measured limiting currents for deposition of copper on a rotating copper disk from aqueous copper sulfate solutions are found to agree satisfactorily with values calculated with consideration of the concentration dependence of the physical properties of the solution. The observed electrode polarization can be traced mainly to the ohmic potential drop in these solutions of low electrical conductivity.

I. Introduction

The rotating disk electrode has been widely used as a tool for studying electrode processes and mass transfer because the velocity and concentration profiles can be predicted theoretically and the strong forced convection eliminates the effects of natural convection. Two main branches of work have been done in this field:

i. to study mass transfer processes by means of the limiting current density or to obtain the diffusion coefficient as a function of concentration.

ii. to study electrode kinetics by means of the polarization curve, so as to obtain the kinetic parameters of the reaction as functions of concentrations.

The theory of concentration polarization of the rotating disk electrode was developed in 1942 by Levich[1]. The original theory of Levich involved the assumptions of constant physical properties throughout the diffusion layer and a zero velocity at the surface of the disk. In order to meet these assumptions, most experimental work has been done at relatively low concentrations (e.g., 10^{-5} to 10^{-3} M). For the details of this theory, one should consult the book of Levich[2] and the review paper by Riddiford[3].

For concentrated electrolytic solutions, several factors may cause deviations from Levich's theory of mass transfer and polarization at a rotating disk electrode:

1. the Schmidt number is not infinite.

2. due to the high mass-transfer rate the interfacial velocity at the electrode surface is not zero.

3. the physical properties, such as density, viscosity, diffusion coefficient, and specific conductivity, are not constant but vary through the diffusion layer as the concentration varies.

4. the solution is not ideal and the activity coefficient must be included in the concentration gradient, particularly in the calculation of the concentration overpotential.

5. the current density at the disk is not uniform because the ohmic potential drop is not uniform.

6. the fluid flow is not laminar.

The effects of the first two factors on rates of mass transfer have been taken into account by various authors[4,5,6,7] to yield separate corrections to Levich's equation. For a gaseous system, these two factors may dominate the correction, and the effect of variable physical properties should be negligible.

Recently Newman and Hsueh[8] have calculated mass transfer rates by a procedure which accounts for the concentration dependence of the physical properties, the non-zero interfacial velocity, and the finite Schmidt number for metal deposition from a concentrated, binary electrolyte. Both the velocity profile and the concentration profile were calculated as well as the dependence of the limiting current density on bulk concentration and rotation speed.

Below the limiting current, the polarization is important in determining the magnitude and the distribution of the current. In general, the potential of the disk electrode relative to a reference electrode is regarded as the sum of the surface overpotential η_s, the concentration overpotential η_c, and the ohmic potential drop in the solution $\Delta\Phi_{ohm}$,

$$\Delta V = \eta_s + \eta_c + \Delta\Phi_{ohm} . \qquad (1)$$

Most of the known electrode reactions take place with both overpotentials and a certain amount of ohmic potential drop. None of them is negligible compared with the others.

Newman[9] introduced the term, surface overpotential, to include the charge-transfer or activation overpotential, crystallization overpotential, double-layer effects, and any other overpotential associated directly with the reaction occurring at the electrode surface, since it is not obvious how to measure these effects separately. The surface overpotential is thus concerned with the physical situation at the electrode surface, such as the surface condition, the current density at the surface, and the concentration at the electrode surface.

Generally the surface overpotential is defined as the potential of the electrode minus the potential of a reference electrode of the same kind located just outside the diffuse double layer and is obtained from measured potentials by correction for the concentration overpotential and the ohmic drop according to equation (1). On the basis of empirical evidence, the relationship between current density and surface overpotential can frequently be expressed as

$$i = i_o \left[\exp\left(\frac{\alpha nF}{RT}\,\eta_s\right) - \exp\left(-\frac{(1-\alpha)nF}{RT}\,\eta_s\right)\right], \qquad (2)$$

where i_o is the exchange current density and depends on the concentration at the surface, α is the transfer coefficient, and n, F, R, and T have their usual meaning.

The concentration overpotential, as its name implies, is concerned with the overpotential arising due to the concentration difference between the bulk solution and the surface of the electrode. Let $\Delta\Phi_i$ be the potential of a reference electrode near the working electrode minus the potential of a reference electrode in the bulk, and let $\Delta\Phi_{ohm}$ be the potential difference which would exist if there were the same current distribution but no concentration gradient in the diffusion layer. Then the concentration overpotential is defined as

$$\eta_c = \Delta\Phi_i - \Delta\Phi_{ohm} \ . \tag{3}$$

For metal deposition from a binary electrolyte the concentration overpotential is[8]

$$\eta_c = \frac{z_+ - z_-}{z_+ z_-} \frac{RT}{F} \int_{(\gamma m)_o}^{(\gamma m)_\infty} (1 - t_+^o) \, d \ln (\gamma m) + \int_o^\infty i \left(\frac{1}{\kappa} - \frac{1}{\kappa_\infty} \right) dy. \tag{4}$$

The first term represents the potential of a concentration cell, and the second term is the change in the ohmic drop due to the variation of the conductivity within the diffusion layer. Newman and Hsueh[8] have calculated concentration overpotentials according to equation (4) for copper deposition from copper sulfate solutions.

Finally, the ohmic drop of the solution is calculated by solving Laplace's equation for the potential distribution outside the diffusion layer. This involves the specific arrangement of the walls of the cell, the counter electrode, and the size of the insulating part of the disk. In addition the current distribution on the disk electrode must agree with the overpotential and concentration distribution on the disk. However, as an approximation we may use the potential distribution corresponding to the primary current distribution for a disk embedded in an infinite insulating plane with the counter electrode at infinity, as calculated by Newman[10]. The more general problem of calculating the current distribution below the limiting current will be treated in a separate paper[11]. With the primary current distribution, the ohmic potential drop is

$$\Delta\Phi_{ohm} = \frac{r_o i}{2\kappa_\infty} \tan^{-1} \lambda \ . \tag{5}$$

The distance parameter λ refers to the placement of the reference electrode

$$\left.\begin{array}{ll} \lambda = y/r_o & \text{at } r = 0 \text{ (on the axis of the disk)} \\ \lambda = \sqrt{(r/r_o)^2 - 1} & \text{at } y = 0,\ r > r_o \\ & \text{(in the plane of the disk)} \end{array}\right\} \quad (6)$$

Previous work on mass transfer and polarization at a rotating disk electrode have been summarized in the above discussion. The primary aim of this work was to study the mass-transfer rate by means of the limiting current for comparison with the theoretical results where the variation of physical properties in the diffusion layer was taken into account[8]. At the same time the electrode potentials were measured at currents below the limiting current and compared with the values calculated by taking into account surface overpotential, concentration overpotential, and ohmic drop in the solution.

II. Experimental Work

Since the theoretical analysis involves a binary electrolyte, a metal deposition reaction in the absence of supporting electrolyte--the system of copper electrode and aqueous copper sulfate solutions-- was chosen for this investigation, in spite of the fact that it has the following experimental difficulties:

i. the electrode surface cannot remain unaltered.

ii. the plateau is not clearly defined in a current-overvoltage measurement.

Because of the inevitability of surface changes during a metal deposition reaction, one needs to know how smooth the electrode surface should be or what is the maximum tolerable roughness in order to maintain the theoretically expected velocity profile.

From the studies of Ibl and Schadegg[12], Rogers and Taylor[13], and

Karasyk and Linford[14], we concluded that in order to maintain hydrodynamic smoothness of the electrode surface, care should be taken that the limiting current density is not exceeded during the polarization measurements, and once a surface reaches the limiting current density, it should be retreated before being used for further measurement.

Since there was no supporting electrolyte in this work, the electrical conductivity was very low compared to most other work in this field. Because the ohmic drop in the solution was high compared with the concentration and surface overpotential, the plateau on the current-voltage curve due to concentration polarization was essentially overshadowed, and it was difficult to locate the limiting density by a current vs. voltage measurement. For this reason, the limiting speed method was developed; that is, instead of keeping the rotating speed constant and varying the current density, as most other experimenters have done, we held the current density constant and varied the rotation speed. Thus the ohmic potential drop was kept nearly constant throughout a run.

The measurement of limiting speed has the same physical significance as a limiting-current-density measurement. The limiting current density gives the minimum current required to discharge all the reactive ions brought to the electrode surface at a given speed of rotation, whereas the limiting speed gives the minimum speed required to supply the reactive ions at a given current density. Both measurements correspond to a zero concentration of ions at the electrode surface.

1. Design and Description of Electrodes

<u>Cathode</u> (Rotating Disk Electrode)

The size and the shape of the rotating disk electrode is important

since it may affect the flow pattern. Riddiford[3] summarized various shapes of disk which have been used in the past by different experimenters. In general, if there is no effect which may propagate backward from the edge of the disk and change the fundamental hydrodynamic model and concentration profile near the surface of the disk, it may be considered to satisfy the original assumptions of the basic theory.

The shap recommended by Riddiford and also the one being used in this work is shown in figure 1. Only the central portion of the upper surface of the disk is active.

Several criteria have been set up by Riddiford and others for the actual design of the size of the electrode. They are:

1. the outside diameter of the disk d should be greater than the hydrodynamic boundary-layer thickness.

2. the diameter of the working surface d_o should be greater than the mass-transfer boundary-layer thickness.

3. the size of the shaft should be less than 30% of the size of the disk, so that the shaft will not affect the main stream of flow.

4. the thickness of the disk should be less than 1/30 of the disk diameter, so that there will be no edge effect.

5. the Reynolds number at the edge should be less than 2×10^5 in order to maintain laminar flow.

The disk has been carefully designed to meet the requirements listed above. The disk is operated in $CuSO_4$ solution with the speed range from 60 rpm to 500 rpm. The specifications of the disk are:

Outside diameter of disk,	d	= 4 cm
Working electrode diameter,	d_o	= 0.5 cm
Disk thickness,		= 0.1 cm
Shaft diameter,		= 1 cm.

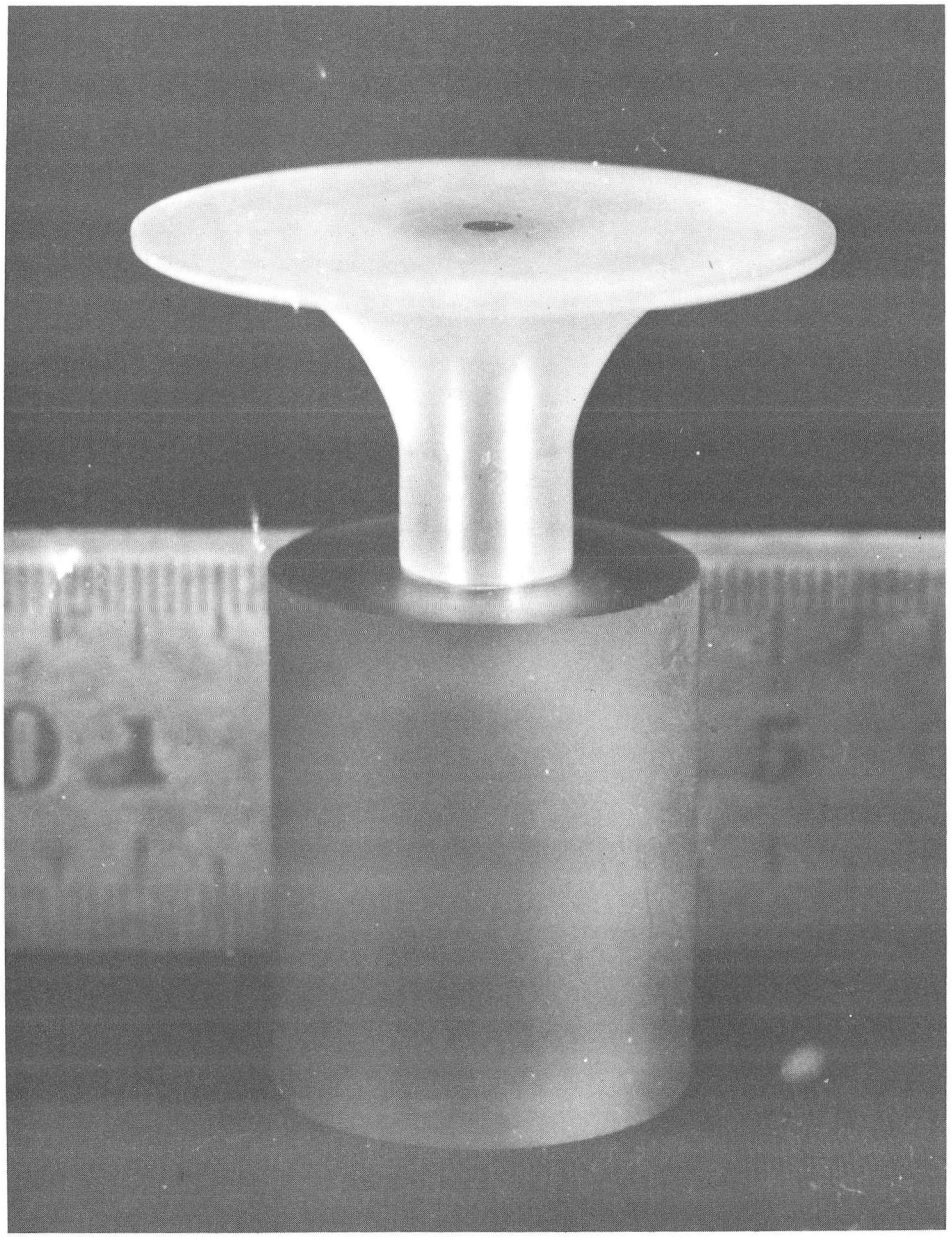

ZN-5395

Fig. 1

The central part of the electrode was machined from oxygen-free, high purity copper to precise dimensions and then embedded in an epoxy resin cast. It was further machined to the desired shape.

The disk was attached to a spindle which was tightly fitted in two 7/8-inch o.d. New Departure 77 RC bearings. These bearings were mounted inside a heavy brass bearing case in order to keep the eccentricity as small as possible. The eccentricity at the edge of the disk was measured to be less than 0.002 inch.

Anode

The anode was designed to provide an area more than 100 times larger than the cathode for the purpose of minimizing the anodic overpotential. The anode was embedded at the bottom of the vessel and could be taken apart to clean the surface before each experiment. It was made liquid tight with a rubber ring placed in a groove.

Reference Electrode

An oxygen-free, high purity copper rod was used as the reference electrode. It was connected to the electrolytic cell through a capillary tube filled with electrolytic solution of the same concentration as in the cell. The capillary had a fine tip which faced downward and was located at the side of the rotating disk. The use of a copper reference electrode was desirable since it would not contaminate the solution and involved no liquid junction potential.

2. The Electrical Circuit

The schematic diagram of the circuit for measuring the limiting speed of the rotating disk is shown in figure 2. The current source was a Lambda model 28 regulated power supply. The current flow in the cell was

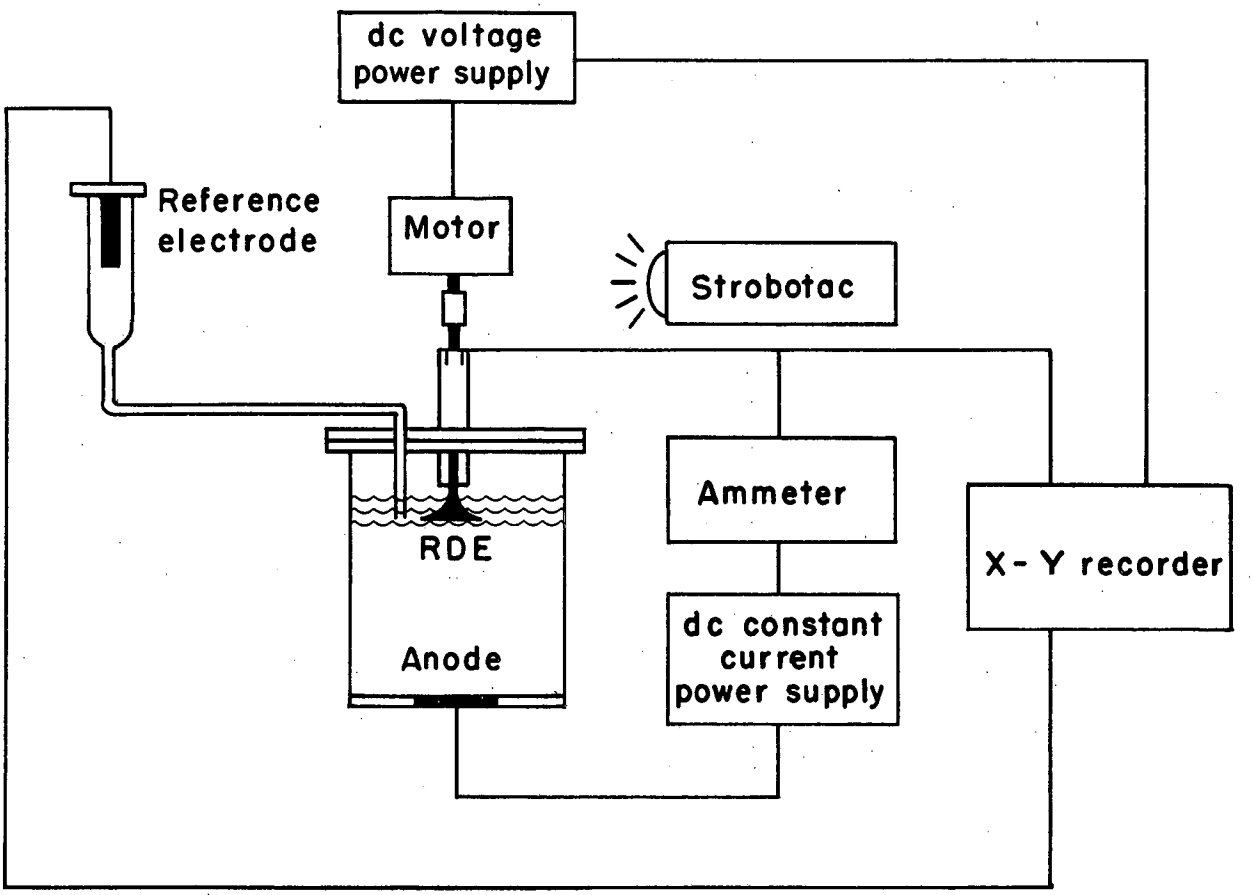

MUB-9901

Fig. 2

measured with a Keithley Model 610R Electrometer which has an accuracy of 2%. The electrical connection to the rotating disk electrode was accomplished by means of a mercury well. The disk was rotated with a variable speed motor (Bodine Electric Co., Type NSE 11R, two-shaft AC-DC motor with a gear ratio of 10 to 1) controlled by a precision DC voltage power supply (Power Design Inc., Model 5015A). Because of the direct proportionality of rotating speed to the motor voltage, the approximate rotation speed could be monitored during the course of a run by means of an X-Y recorder which plotted the motor voltage versus the measured electrode potential. It was possible to measure the exact rotational speed with an accuracy of 1% by a strobotac (General Radio Co., Type 631-BL).

3. Experimental Procedure

Reagent grade $CuSO_4$ was used without further purification. Distilled water was used in the preparation of all solutions. Cylinder nitrogen was bubbled through the solution to expel all dissolved oxygen, which may affect the surface of the electrode during the reaction. The temperature was 25°C.

Before each run, the surfaces of the electrodes were cleaned as follows:

1. The electrodes were polished with 600-A silicon carbide paper until all previous traces of deposit or corrosion were gone. The maximum scratch on the surface is then on the order of 10 μ (10^{-3} cm).

2. The cathode was further polished on plate glass using fine lens powder (aluminum oxide powder mixture) of 0.3 μ grain size as grinding compound.

3. The electrode was washed with carbon tetrachloride followed by 5% sodium carbonate solution.

4. The surfaces were rinsed with tap water followed by distilled water.

The disk electrode was initially set at a relatively high speed (5-10 times higher than the "limiting speed"). The speed was decreased by decreasing the voltage to the motor which drove the shaft of the disk. The total overpotential was not very sensitive to this decrease of speed at a given current density until it came close to the limiting speed where the potential sharply increased. At this point the rotation speed was measured by a strobotac. A typical plot of the potential of the disk electrode vs. the rotation speed is shown in figure 3.

III. Results

The limiting speeds ranging from 60 rpm to 500 rpm were measured at constant current density according to the procedure given in the previous section for four values of the bulk concentration: 0.02 M, 0.05 M, 0.1 M, and 0.3 M. Theoretically, in spite of the concentration dependence of the physical properties, etc., the limiting current density is still proportional to the square root of rotation speed. This has been verified in this work. Straight lines passing through the origin were obtained for the square root of limiting speed plotted against current density for the four concentrations studied. The slopes of these lines, $i_{lim}/\sqrt{\Omega}$, are shown in figure 4 and in table 1 where they have been compared with the values predicted from the theoretical analysis[8] which considers variations of physical properties, non-zero interfacial velocity, and the finite Schmidt number. For Levich's equation, the physical properties were evaluated at the bulk concentration. The theoretical analysis indicates a correction of +1.57% to the Levich equation for a 0.02 M copper sulfate solution and +13.1% correction for a 0.3 M solution. The experimental results show a slight negative deviation at low concentrations but agree

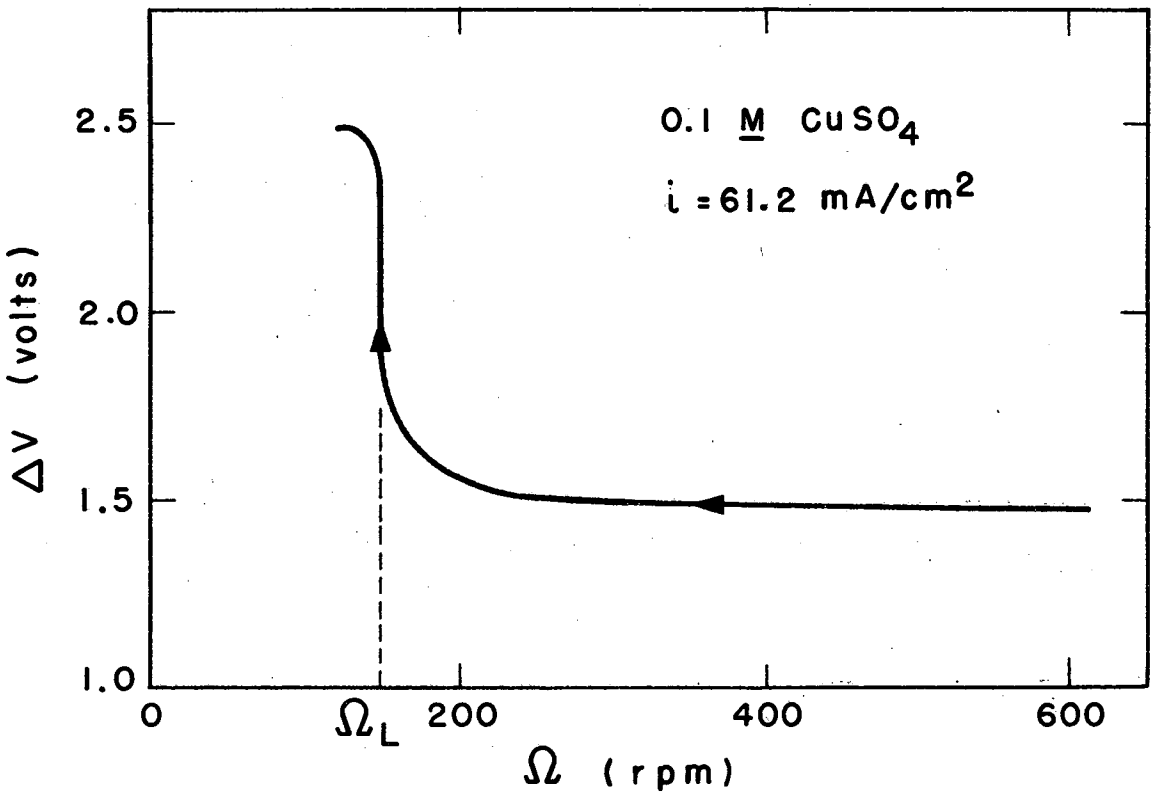

MUB-9900

Fig. 3

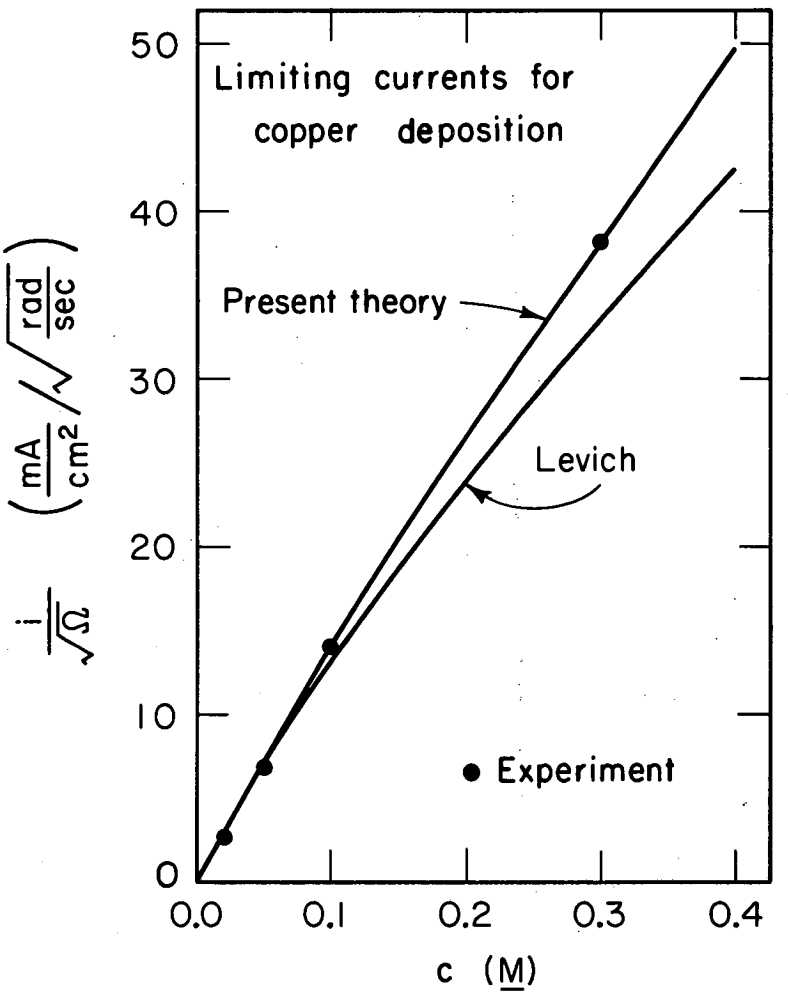

MU-37130

Fig. 4

well with the theoretical results at high concentration. A trace of impurity in the low concentration copper sulfate solution without supporting electrolyte may depress the migration effect considerably[15].

Table 1. Limiting currents for copper deposition.

c_∞	$i_{lim}/\sqrt{\Omega}$, $(mA/cm^2)/\sqrt{rad/sec}$		
M	experimental	theoretical[8]	Levich
0.02	2.86	3.042	2.995
0.05	7.04	7.173	6.986
0.1	14.06	14.13	13.05
0.3	38.1	38.12	33.71

In the classical measurement of the limiting current density, the current is plotted vs. the electrode potential relative to the reference electrode (ΔV in equation (1)). But in a solution with no supporting electrolyte, the large ohmic drop in the solution obscures the plateau at the limiting current. This is seen in figure 5, which shows the current-potential curve for a rotating copper disk electrode in a 0.1 M copper sulfate solution at a constant rotation speed of 300 rpm. The disk had a radius of 0.25 cm, and the specific conductivity of the bulk solution was[16] 0.00872 ohm^{-1}-cm^{-1}. The theoretical concentration overpotential η_c was given by Newman and Hsueh[8]. The surface overpotential η_s was calculated by equation (2), with the values[17] $\alpha = 0.5$, $n = 4$, and $i_o = 1.0\ mA/cm^2$. Actually the variation of i_o with the concentration at the surface should be taken into account. The ohmic drop of the solution $\Delta\Phi_{ohm}$ can be estimated from equation (5) with λ determined from the fact that the reference electrode probe in our experiment was located in the plane of the disk 2.5 cm from the axis of rotation. The

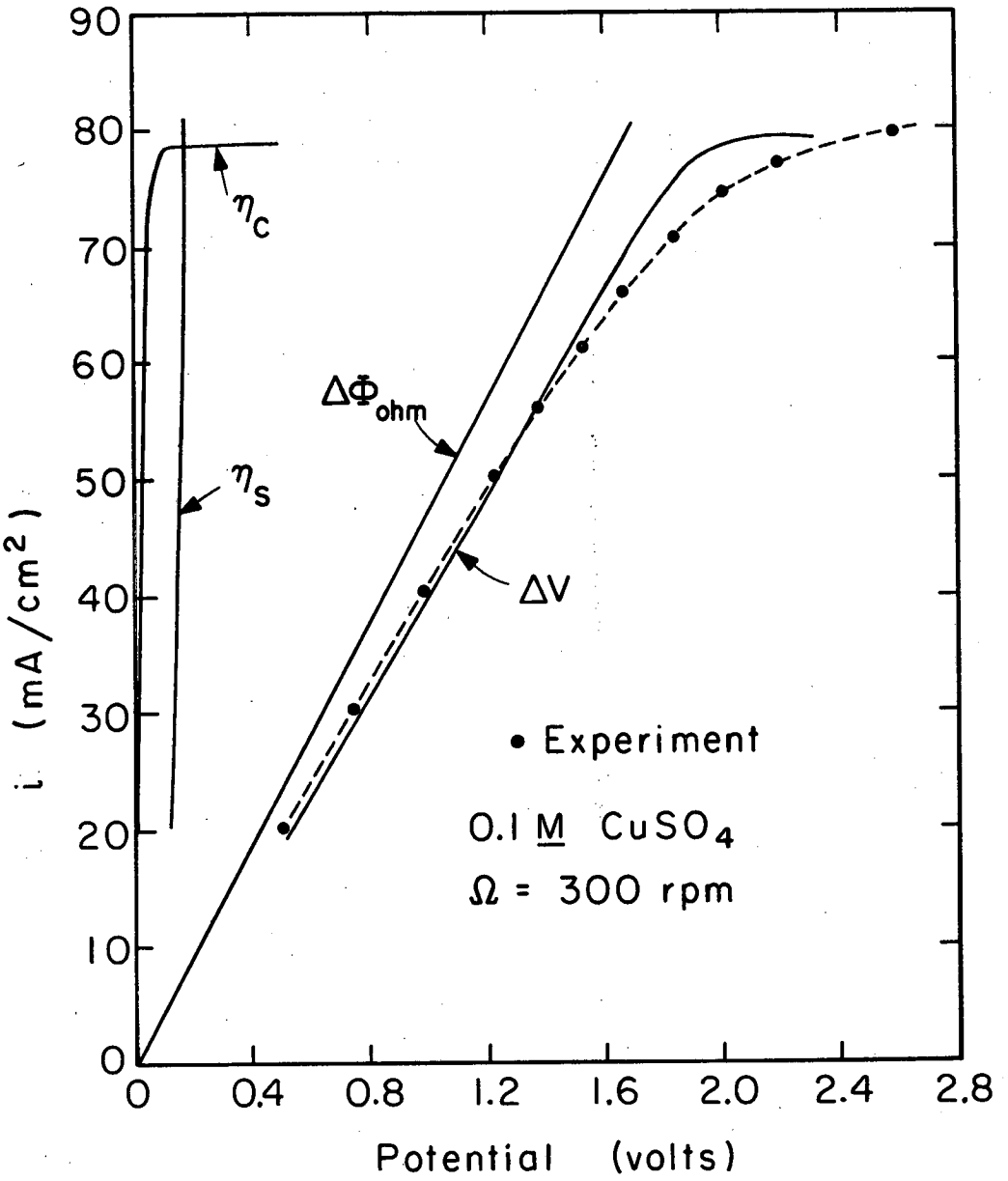

MUB-9899

Fig. 5

sum of these calculated terms is shown along with the experimentally measured values of the electrode potential. One sees from the figure that the ohmic drop is the largest contribution to the total potential and can easily obscure the break in the concentration polarization curve in this experiment.

IV. Discussion

In the study of electrode kinetics, one is mainly interested in the surface overpotential, but in a solution of low conductivity the ohmic resistance dominates the overall polarization measurement. Hence it is worthwhile to emphasize how the several contributions to the polarization depend upon the various system parameters:

η_s depends on i and c_o,

η_c depends on $i/\sqrt{\Omega}$ and c_∞,

$\Delta\Phi_{ohm}$ depends on $i \cdot r_o/\kappa_\infty$ and the position of the reference electrode,

where c_o is the concentration at the surface and c_∞ is the bulk concentration. If polarization is measured at a constant value of $i/\sqrt{\Omega}$, then both η_c and c_o are constant while surface overpotential and ohmic drop vary. Furthermore, $\Delta\Phi_{ohm}$ is proportional to the radius of the disk electrode and should be reduced relative to the surface overpotential by a reduction of the electrode diameter. This may result in a conflict with the criterion that the electrode diameter should be much greater than the thickness of the diffusion layer, but in future work both factors should be considered in the design of the disk.

V. Conclusions

1. From the theoretical analysis, the effect of variation of physical properties and non-zero interfacial velocity at the electrode

surface are important in mass transfer studies of concentrated solutions with the rotating disk electrode. This has been confirmed experimentally in this work for copper deposition from copper sulfate solutions.

2. In a solution without supporting electrolyte, the high ohmic drop of the solution overshadows the plateau on the current-voltage curve due to the concentration polarization. Work on nonaqueous solutions by the rotating disk electrode method may face the same problem. It can be overcome by the use of the "limiting speed" technique.

3. In electrode kinetic studies with a solution of low electrical conductivity, the proper size of the disk has to be considered with reference to both the thickness of the diffusion layer and the ohmic drop in the solutions.

Acknowledgments

The authors are grateful to Professor C. W. Tobias for helpful advice, and to the U. S. Army Electronic Laboratories and the United States Atomic Energy Commission for financial support.

Nomenclature

c - concentration of binary electrolyte.

F - Faraday's constant (coulomb/equiv).

i - current density (amp/cm^2).

i_o - exchange current density (amp/cm^2).

m - molality (mole/kg).

n - number of electrons in equation for electrode reaction.

r_o - radius of rotating disk electrode.

R - universal gas constant (joule/mole-deg).

t_+^o - cation transference number with respect to solvent velocity.

T - temperature (°K).

ΔV - potential difference between rotating disk electrode and reference electrode.

y - normal distance from disk.

z_i - valence or charge number of species i.

α - transfer coefficient.

γ - mean molal activity coefficient.

η_c - concentration overpotential.

η_s - surface overpotential.

κ - specific conductivity (mho/cm).

λ - distance parameter, defined in equation (6).

$\Delta\Phi_i$ - potential difference between reference electrode just outside diffuse double layer and one outside the diffusion layer.

$\Delta\Phi_{ohm}$ - ohmic potential drop.

Ω - rotation speed (radians/sec or rpm).

Literature Cited

1. V. G. Levich. "The Theory of Concentration Polarization." Acta Physicochimica U.R.S.S., 17, 257-307 (1942).

2. V. G. Levich. Physicochemical Hydrodynamics. Englewood Cliffs: Prentice-Hall, Inc., 1962.

3. A. C. Riddiford. "The Rotating Disk System." Advances in Electrochemistry and Electrochemical Engineering, Vol. 4, P. Delahay and C. W. Tobias, eds. New York: Interscience Publishers, in preparation.

4. D. P. Gregory and A. C. Riddiford. "Transport to the Surface of a Rotating Disc." Journal of the Chemical Society, pp. 3756-3764 (1956).

5. John Newman. "Schmidt Number Correction for the Rotating Disk." Journal of Physical Chemistry, 70 (March, 1966).

6. E. M. Sparrow and J. L. Gregg. "Heat Transfer From a Rotating Disk to Fluids of Any Prandtl Number." Journal of Heat Transfer, 81C, 249-251 (1959).

7. Donald R. Olander. "Rotating Disk Flow and Mass Transfer." Journal of Heat Transfer, 84C, 185 (1962).

8. John Newman and Limin Hsueh. "The Effect of Variable Transport Properties on Mass Transfer to a Rotating Disk." UCRL-16623. February, 1966.

9. John Newman. "The Effect of Migration in Laminar Boundary Layers." UCRL-16665. February, 1966.

10. John Newman. "Resistance for Flow of Current to a Disk." Journal of the Electrochemical Society, 113 (May, 1966). (UCRL-16498. November, 1965.)

11. John Newman. "Current Distribution on a Rotating Disk below the Limiting Current." UCRL-16747. April, 1966.

12. N. Ibl and K. Schadegg. "Study of the Electrodeposition of Copper in the Limiting Current Range." Submitted to the Journal of the Electrochemical Society.

13. G. T. Rogers and K. J. Taylor. "Effect of Small Protrusions on Mass Transfer to a Rotating Disk Electrode." Nature, 200, 1062-1064 (1963).

14. L. Karasyk and H. B. Lindford. "Electrode Kinetic Parameters for Copper Deposition on Clean and Soiled Copper Cathodes." Journal of the Electrochemical Society, 110, 895-904 (1963).

15. John Newman. "The Effect of Ionic Migration on Limiting Currents." UCRL-16586. January, 1966.

16. B. Fedoroff. "Contribution a l'étude des sulfates simples et doubles de quelques métaux de la série magnésienne." Annales de Chimie, ser. 11, 16, 154-214 (1941).

17. Tor Hurlen. "On the Kinetics of the Cu/Cu^{++}_{aq} Electrode." Acta Chemica Scandinavica, 15, 630-644 (1961).

Figure Captions

Fig. 1 Rotating disk electrode.

Fig. 2 Schematic diagram of the system.

Fig. 3 Typical dependence of electrode potential on rotation speed.

Fig. 4 Limiting currents for copper deposition.

Fig. 5 Polarization at a rotating disk electrode.

This report was prepared as an account of Government sponsored work. Neither the United States, nor the Commission, nor any person acting on behalf of the Commission:

A. Makes any warranty or representation, expressed or implied, with respect to the accuracy, completeness, or usefulness of the information contained in this report, or that the use of any information, apparatus, method, or process disclosed in this report may not infringe privately owned rights; or

B. Assumes any liabilities with respect to the use of, or for damages resulting from the use of any information, apparatus, method, or process disclosed in this report.

As used in the above, "person acting on behalf of the Commission" includes any employee or contractor of the Commission, or employee of such contractor, to the extent that such employee or contractor of the Commission, or employee of such contractor prepares, disseminates, or provides access to, any information pursuant to his employment or contract with the Commission, or his employment with such contractor.