UCRL-16880

University of California

Ernest O. Lawrence Radiation Laboratory

TWO-WEEK LOAN COPY

This is a Library Circulating Copy which may be borrowed for two weeks. For a personal retention copy, call Tech. Info. Division, Ext. 5545

A SEMIAUTOMATIC INFRARED ANALYZER FOR SERUM TRIGLYCERIDES AND CHOLESTERYL ESTERS

Berkeley, California

DISCLAIMER

This document was prepared as an account of work sponsored by the United States Government. While this document is believed to contain correct information, neither the United States Government nor any agency thereof, nor the Regents of the University of California, nor any of their employees, makes any warranty, express or implied, or assumes any legal responsibility for the accuracy, completeness, or usefulness of any information, apparatus, product, or process disclosed, or represents that its use would not infringe privately owned rights. Reference herein to any specific commercial product, process, or service by its trade name, trademark, manufacturer, or otherwise, does not necessarily constitute or imply its endorsement, recommendation, or favoring by the United States Government or any agency thereof, or the Regents of the University of California. The views and opinions of authors expressed herein do not necessarily state or reflect those of the United States Government or any agency thereof or the Regents of the University of California.

UCRL-16880
UC-37 Instruments
TID-4500 (48th Ed.)

UNIVERSITY OF CALIFORNIA

Lawrence Radiation Laboratory
Berkeley, California

AEC Contract No. W-7405-eng-48

A SEMIAUTOMATIC INFRARED ANALYZER FOR SERUM TRIGLYCERIDES AND CHOLESTERYL ESTERS

Norman K. Freeman, Edward Lampo, and Alfred A. Windsor

May 18, 1966

Printed in USA. Price $1.00. Available from the Clearinghouse for Federal Scientific and Technical Information, National Bureau of Standards, U. S. Department of Commerce, Springfield, Virginia.

A SEMIAUTOMATIC INFRARED ANALYZER FOR SERUM TRIGLYCERIDES AND CHOLESTERYL ESTERS

Norman K. Freeman, Edward Lampo, and Alfred A. Windsor

Donner Laboratory and Lawrence Radiation Laboratory
University of California, Berkeley, California

May 18, 1966

ABSTRACT

An instrument has been developed for the semiautomatic analysis of mixtures of triglycerides and cholesteryl esters. The method is based on high-resolution infrared spectrophotometry, and has previously been shown to be applicable to the determination of these components in the nonionic fraction of human serum lipids. A simple nonrecording grating spectrophotometer has been suitably modified to carry out this analysis; and appropriate computing circuitry has been coupled with it for performing the two-component calculation. The supplementary electronics consist of operational amplifiers, a logarithmic conversion circuit, a digital voltmeter, and a printer. Automatic operation is accomplished by a control mechanism, which programs the measurements, the steps in the calculations, and print-out of the results.

Sample preparation consists of an extraction of lipids from serum in such a way as to exclude phospholipids. This may be done in a single step, although a two-step procedure--total lipid extraction followed by adsorption separation of the phospholipids--appears to be more reliable. Measurements are made on a solution of the neutral lipid fraction in carbon tetrachloride.

INTRODUCTION

The simultaneous determination of triglycerides and cholesteryl esters in blood serum by an infrared spectrophotometric method has been described in a previous report.[1] The essential features of the method are: 1. A suitable extraction-adsorption procedure for obtaining the mixed neutral lipids free of phospholipids. 2. Infrared absorption measurements at two frequencies (wavelengths) corresponding approximately to the characteristic peak positions of the two types of esters. As these peak positions are separated by about 14 cm^{-1} (approximately 0.05μ), in the spectrum of a mixture of the two components the bands cannot be completely resolved. However, with adequate resolution and good precision of wavelength setting, measurements at the two positions can be used successfully in a standard two-component spectrophotometric analysis. Because of its inherent simplicity, this analysis should lend itself to automation. Complete automation would imply a system of sample handling as well as a system of computation and print-out. However, at this stage we have deferred the problem of automated sample handling (including extraction), and devoted our attention to measurement and computation. Therefore we have designated the apparatus assembled at present as a "semiautomatic" analyzer. Excluding sample treatment, the operation is extremely simple. Once an aliquot of serum has been extracted and an appropriate lipid fraction obtained, the latter is dissolved in a measured volume of CCl_4 and the resulting solution is used to fill the absorption cell of the spectrophotometer. Then, on command, the instrument does the following: 1. Measures absorbances at two wavelengths. 2. Computes the concentrations of the two components. 3. Prints the results.

METHOD OF ANALYSIS

The method as previously developed is based on the absorption bands shown in Fig. 1. The bands were recorded with a grating spectrophotometer (Perkin-Elmer Model 421), and the abscissa (frequency) scale was expanded to five times normal. The frequencies at which absorbance measurements are made have been indicated at 1745 cm^{-1} and 1730 cm^{-1}. When converted to wavelength units, the corresponding values are 5.73μ and 5.78μ. As the degree of overlapping of these bands is determined by the natural bandwidths, higher instrumental resolving power would not decrease the overlap. Insufficient resolving power, however, would broaden these bands and thereby increase the overlapping to a point where the analysis would be impossible. It appears that grating instruments in general have more than adequate resolving power, whereas most sodium chloride prism instruments, with the possible exception of those which provide for the use of very narrow slits and are also capable of wavelength settings to the order of 0.001μ, are unsuitable for this analysis.

The usual spectrophotometric criteria apply, i.e., absorbances of the pure components should be independent, additive, and linear functions of concentration. The mathematical formulation for two components is a pair of linear simultaneous equations:

$$A_{\lambda_1} = a_{11}C_1 + a_{12}C_2 \qquad (1a)$$

$$A_{\lambda_2} = a_{21}C_1 + a_{22}C_2 \qquad (1b)$$

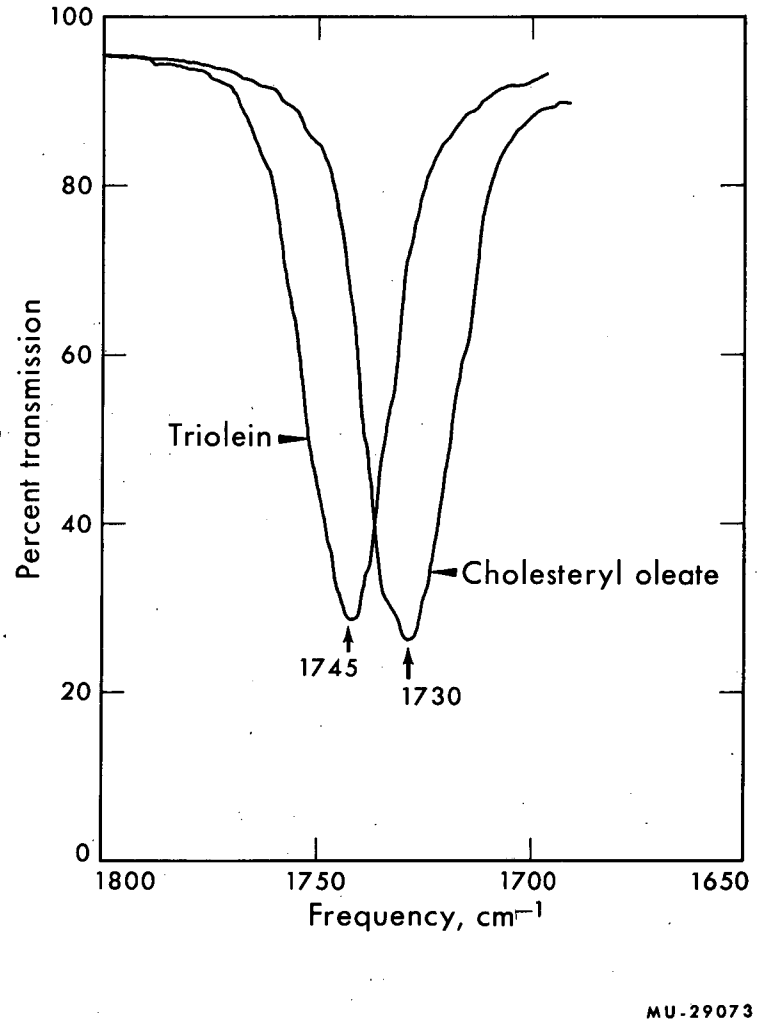

Fig. 1. Carbonyl absorption bands of triolein and cholesteryl oleate. Solutions in CCl_4: triolein, 3.11 mg/ml; cholesteryl oleate, 7.16 mg/ml. Cell thickness, 1.0 mm. Frequency scale expanded 5 times normal. (From reference 1).

where

A = measured absorbance
C = concentration
α = absorption coefficient
λ = wavelength.

These equations are solved for C_1 and C_2, giving:

$$C_1 = k_1 A_{\lambda_1} + k_2 A_{\lambda_2} \quad (2a)$$

$$C_2 = k_3 A_{\lambda_1} + k_4 A_{\lambda_2} , \quad (2b)$$

where the k's are constants derived from the matrix of α's. In practice, the α's are determined as calibration coefficients for a given absorption cell, and include the cell thickness implicitly as a constant. Carbon tetrachloride solutions of each pure reference compound (triolein and cholesteryl oleate) over a suitable concentration range are prepared, and their absorbances are measured at both wavelengths. Some typical calibration curves are shown in Fig. 2; where the slight departures from linearity depend in part on the instrument or operating conditions. If α's are taken as the average values of A/C (or slopes through the midrange of the calibration curves), there will be small errors in the high and low concentration ranges, estimated in this instance to be about 2 to 3%. The values of the constants (k's) in Eqs. (2a) and (2b) are readily calculated.

To carry out the analysis, then, a serum lipid extract (phospholipid-free) is dissolved in a measured volume of CCl_4 and the absorbances of this solution are measured at the two analytical wavelength settings. Use of these absorbance values in Eqs. (2a) and (2b) gives concentrations of the two components in the CCl_4 solution; these are converted to serum concentrations by appropriate dilution factors.

It was established in our original method[1] that a total lipid extract from serum (obtained by the method of Sperry and Brand[2]) could be freed of phospholipids by adsorption on silicic acid from chloroform-acetone solution. We used a batch procedure in preference to columns, mainly for convenience. No neutral lipids were lost. We also showed that unesterified fatty acids, in amounts at least three times the mean normal value for serum, do not cause a significant error in values for either triglycerides or cholesteryl esters. Nor does unesterified cholesterol, in amounts as much as five times normal, cause errors in these values.

AUTOMATED SYSTEM

In order to perform this analysis automatically, the overall system must contain the following:

1. A spectrophotometer with adequate resolving power and also a high order of reproducibility of wavelength setting.
2. Provision for converting transmittance measurements to absorbances.
3. Computing circuitry to carry out the arithmetic indicated by Eqs. (2a) and (2b).
4. A read-out and print-out device.

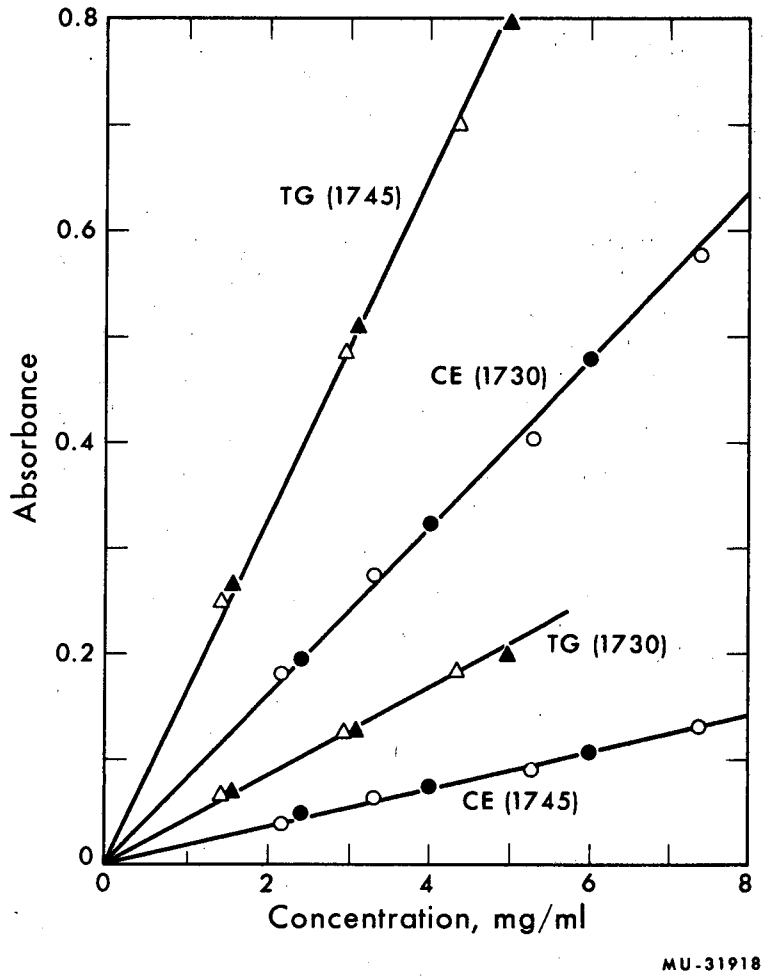

Fig. 2. Calibration curves for triolein (TG) and cholesteryl oleate (CE). CCl_4 solutions; cell thickness, 1.0 mm. Frequencies in cm^{-1} are given in parentheses. Open and solid data points represent two separate calibrations at different times. (From reference 1).

5. A control unit to program the steps of the analytical cycle.

The essential features of the analyzer developed to meet these criteria are outlined in the following sections.

Spectrophotometer

The spectrophotometer chosen for this developmental purpose was the Baird-Atomic Model SR-1. This is a small single-beam grating spectrophotometer equipped with a fixed slit and a meter read-out. It is a simple inexpensive unit on which to build the analytical system. (For this specialized application, the scanning mechanisms and chart recorders that are incorporated into most infrared spectrophotometers are superfluous.) With the modifications indicated below, it is suitable for performing the analysis without the addition of computer and print-out devices; i.e., meter readings may be taken and used for calculation. The necessary modifications of this instrument were the following:

1. Substitution of an appropriate combination of diffraction grating and filter.
2. Installation of a motor-actuated grating positioner.
3. Provision for purging the housing with dry air.

The instrument as originally obtained was designed to operate in the wavelength range from 2.3 to 4.5μ. For our purpose the grating was replaced by one having appropriate characteristics for the 5 to 8μ range (Bausch and Lomb No. 33-53-06-88). This grating has 150 lines/mm and is designed for maximum efficiency in the vicinity of 6μ. A filter to match this transmission range was obtained from Perkin-Elmer Corp. (No. 237-1201). This filter, opaque to wavelengths shorter than about 5μ, blocks second-order dispersion of radiations having half the wavelengths to be measured.

For manual operation of the instrument, the grating was turned by a worm gear system, and the wavelength was calibrated with a dial mounted on the front panel. As this dial could not be set precisely enough for this analysis, it was replaced by a lever arm and pointer, which could be set on a fixed millimeter scale. Nominally this arm and pointer allow the grating to be positioned reproducibly to about 0.001μ. But this apparent precision is reduced somewhat by imperfection of the mechanical system. For automatic operation, the lever arm is driven alternately against two adjustable stops by a small reversible timing motor.

Since there are strong absorptions by water vapor in the 5.5 to 7.5μ region of the spectrum, the background energy level is increased 60 to 70%, and also stabilized, when atmospheric water is removed from the optical path. This path is entirely enclosed, so provision is made to flow dry air through the housing. A double beam spectrophotometer would not require dry air.

Computational Circuitry

A block diagram of the entire system is shown in Fig. 3. The spectrophotometer has a self-contained signal amplifier, which presents output as transmittance relative to 100% for pure solvent. This measurement is first amplified by an additional factor of ten in a current amplifier. It is then converted to absorbance by the logarithmic conversion circuit, which consists of

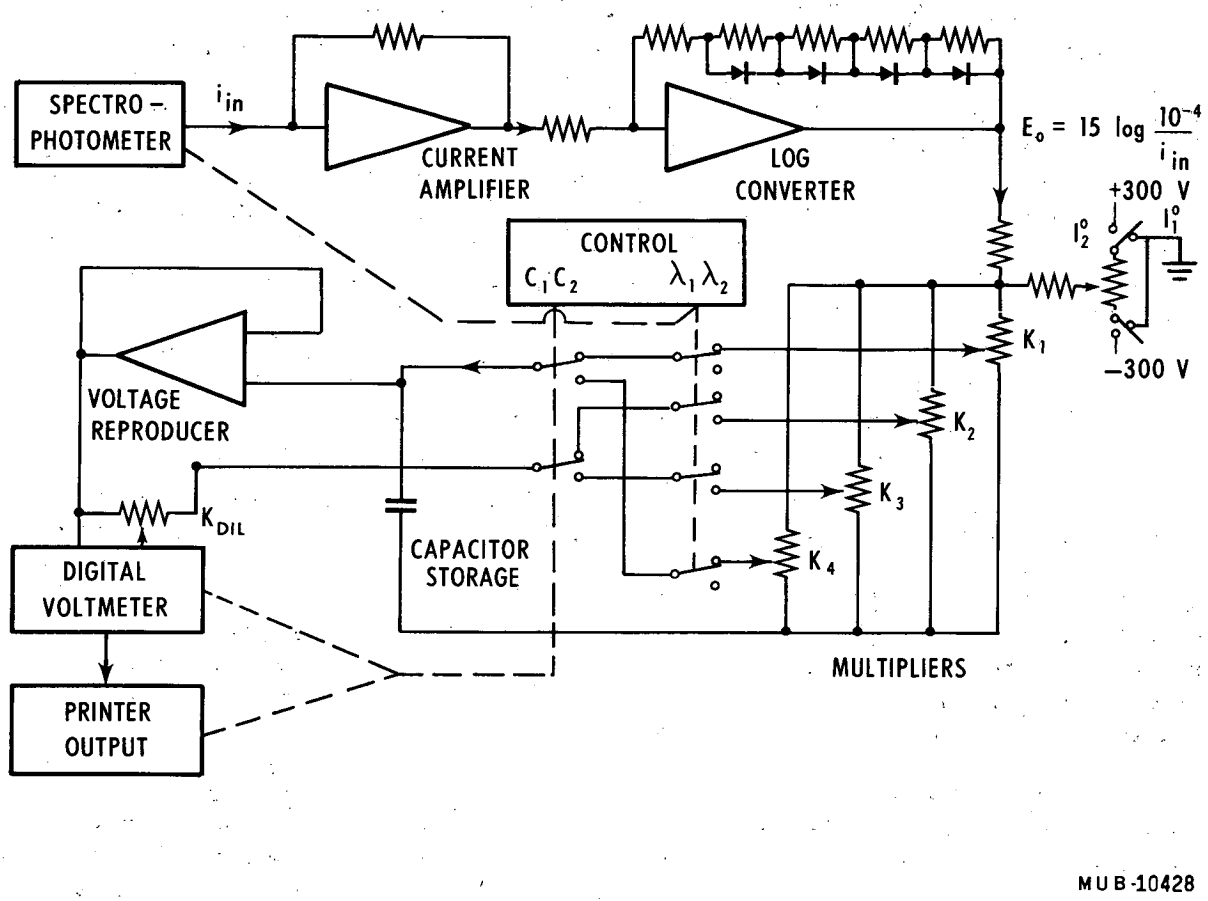

Fig. 3. Outline diagram of the automated system.

an operational amplifier shunted by a network of resistors and Zener diodes. The values of the resistors are chosen so that the output voltage of the network is a logarithmic function of the input current, as in the following equation:

$$E_0 = 15 \log_{10} (10^{-4}/i_{in}) . \qquad (3)$$

A semilog plot of output voltage vs input current is linear to about 1% over a range of 1.5 decades, which is sufficient for the normal range of spectrophotometric measurements.

The computation, as specified by Eqs. (2a) and (2b), consists of multiplying each logarithmic output (absorbance, A) by an appropriate constant [k in Eqs. (2a) and (2b)] and performing the necessary subtractions (k_2 and k_3 under these conditions are always negative). The multipliers are four 10-turn precision potentiometers which can be set equal or proportional to the numerical values of k's determined from calibration data. An essential feature of the calculation is that in each equation one term must be stored while the grating is moved to the other wavelength and the second measurement is made. For example, at λ_1 a voltage corresponding to k_1A_1 is stored in the capacitor. After the grating has been moved to λ_2, the absorbance measured there is multiplied by k_2 to give k_2A_2. The digital voltmeter reads the difference between this value and the stored voltage, and the printer prints the result as C_1. Computation corresponding to the second equation is performed in the same manner, starting at λ_2: k_4A_2 is stored in the capacitor, the grating is moved back to λ_1, and k_3A_1 is subtracted to obtain C_2.

The block labeled control in Fig. 3 consists mainly of a timing mechanism by means of which the appropriate multipliers are switched in, the grating position is changed, and the read and print commands are given, all in the correct sequence.

If the output meter is set at zero absorbance for pure solvent at λ_1, the reading at λ_2 may differ slightly, and a compensating correction must be applied. This is done by means of a potentiometer across the 300 V-supply, from which a small (±) voltage may be tapped and applied to the voltage at the output of the logarithmic conversion stage. In effect this supplementary voltage represents addition or subtraction of a small absorbance corresponding to a background correction, and is applied to all measurements at λ_2. An overall multiplying factor can be applied to the final value (digital voltmeter reading) by means of a potentiometer, designated K_{dil} in Fig. 3. This multiplier permits conversion from solution concentration to serum concentration, taking into account volumes and dilution factors.

The result for each component is displayed on the digital voltmeter and simultaneously printed on paper tape. The voltmeter (Model 4823) and the printer (Model 155) are both products of Non-Linear Systems, Inc., Del Mar, California. The analytical cycle takes about 1 minute per sample after the absorption cell has been placed in the instrument.

RESULTS

The first test of the instrument was to analyze prepared mixtures of triolein and cholesteryl oleate, the pure calibration compounds. Results of a set of such determinations are given in Table I. The same mixtures were analyzed on two occasions, approximately 2 weeks apart. During the intervening time the spectrophotometer was subjected to handling which caused it to go out of calibration. We therefore had to reset the lever arm on the worm gear shaft of the grating to bring the correct wavelengths into the scale range. We then had to readjust the stop screws, using the residual water vapor band as a reference wavelength for establishing the correct scale positions. (A more convenient reference is a 0.0005"Mylar film, whose transmittance is a steep function of wavelength in the vicinity of the triglyceride peak.) After these readjustments the original calibration could still be used.

Table I. Analyses of prepared mixtures of triolein (TO) and cholesteryl oleate (CO) concentration in CCl_4 (mg/ml).

Sample	1	2	3	4	5	6	7
By weight							
TO	0.54	0.54	1.07	1.07	2.14	2.14	3.21
CO	1.96	2.94	1.96	2.94	0.98	3.93	0.98
Analysis No. 1							
TO	0.55	0.57	1.08	1.08	2.16	2.17	3.25
CO	1.93	2.95	2.02	2.97	1.08	3.87	1.06
Analysis No. 2[a]							
TO	0.53	0.52	1.00	1.00	2.10	2.09	3.23
CO	1.94	2.90	1.89	2.80	1.02	3.87	1.02

[a]Two weeks later. See text.

A further test is represented by the analysis of some random serum samples, and comparison of the results with those obtained by other procedures. Table II shows such a comparison. The chemical determination of triglycerides was done by the chromotropic acid method, similar to the procedures of Van Handel and Zilversmit[3] and Carlson and Wadström.[4] The same lipid extract (obtained by the Sperry method) was used for chemical and infrared analyses (standard and automatic), so that those methods were compared beyond the extraction stage. Results from the standard and automatic infrared methods agree quite well, the average difference being 2.6%. The agreement between either of these and the chemical triglyceride method is not quite as good (7.7% difference). Our experience with the chemical method has been limited and is not completely satisfactory.

Table II. Comparison of serum analyses for triglycerides (TG) and cholesteryl esters (CE) by different procedures (mg per 100 ml).

Sample No.		1	2	3	4	5	6	7	8	9
TG	Chemical	233	295	96	445	180	75	131	61	71
	Automatic infrared	250	319	103	495	178	75	123	52	82
	Standard infrared	247	307	108	477	183	76	120	51	80
	Direct extraction	240	299	95	458	168	67	105	45	51
CE	Automatic infrared	369	388	310	346	412	388	460	291	356
	Standard infrared	395	400	309	337	417	389	432	297	357
	Direct extraction	351	347	265	277	363	345	363	235	301

We also made a set of determinations on lipid fractions obtained by "direct" extraction, using the standard infrared method of measurement. This method involves adding serum directly to a mixture of solvent and adsorbent, with the aim of adsorbing the phospholipids and extracting the remaining lipids simultaneously. Such procedures have been described by Van Handel and Zilversmit[3] and by Mendelsohn and Antonis.[5] For purposes of automation, such a single-step extraction would be desirable for its relative simplicity. The results given here (Table II, direct extraction) were obtained by using dichloromethane and Florisil. The agreement between results obtained with direct extraction and results obtained with other methods is fair for triglycerides, but poor for cholesteryl esters. In one experiment with isopropyl ether and silicic acid, as recommended by Mendelsohn and Antonis, we obtained values of both components that were lower by about 3% (and slightly less reproducible) than those from total lipid extraction followed by a separate stage of adsorption. However, it seems likely that this procedure, or some variation of it, will prove suitable for adaptation to the automated analysis.

DISCUSSION

The instrument described is a developmental prototype, which demonstrates the feasibility of automating this particular analysis (and presumably other two-component analyses of this type). On the basis of our experience thus far, its performance could be rated as fair to good. It falls short of excellence mainly because of an instability of the spectrophotometer itself. This is manifested as a tendency to get out of calibration rather easily, and we believe it is caused by faulty design of the grating drive mechanism. Thus in order to obtain the results of which the instrument is capable, it is necessary to check and adjust the wavelength calibration frequently. It is uncertain at this point whether this deficiency can be corrected in this particular monochromator, but the next model constructed should be improved in this respect.

Some other modifications that are being planned are: 1. A built-in absorption cell, with provision for automatic filling and rinsing. This cell will be designed to accommodate smaller samples, corresponding to about 0.25 ml of serum. 2. A more versatile grating positioner, to cover a greater spectral range and allow a variety of measurements and analyses.

This work was performed under the auspices of the U. S. Atomic Energy Commission.

REFERENCES

1. N. K. Freeman, J. Lipid Res. 5, 236 (1964).
2. W. M. Sperry, and F. C. Brand, J. Biol. Chem. 213, 69 (1955).
3. E. Van Handel, and D. B. Zilversmit, J. Lab. Clin. Med. 50, 152 (1957).
4. L. A. Carlson, and L. B. Wadström, Clin. Chim. Acta, 4, 197 (1959).
5. D. Mendelsohn, and A. Antonis, J. Lipid Res. 2, 45 (1961).

This report was prepared as an account of Government sponsored work. Neither the United States, nor the Commission, nor any person acting on behalf of the Commission:

A. Makes any warranty or representation, expressed or implied, with respect to the accuracy, completeness, or usefulness of the information contained in this report, or that the use of any information, apparatus, method, or process disclosed in this report may not infringe privately owned rights; or

B. Assumes any liabilities with respect to the use of, or for damages resulting from the use of any information, apparatus, method, or process disclosed in this report.

As used in the above, "person acting on behalf of the Commission" includes any employee or contractor of the Commission, or employee of such contractor, to the extent that such employee or contractor of the Commission, or employee of such contractor prepares, disseminates, or provides access to, any information pursuant to his employment or contract with the Commission, or his employment with such contractor.