UCRL-16903

# University of California
# Ernest O. Lawrence Radiation Laboratory

TWO-WEEK LOAN COPY

This is a Library Circulating Copy which may be borrowed for two weeks. For a personal retention copy, call Tech. Info. Division, Ext. 5545

FABRICATION OF SINGLE CRYSTAL TUNGSTEN RIBBON FILAMENTS

Berkeley, California

## DISCLAIMER

This document was prepared as an account of work sponsored by the United States Government. While this document is believed to contain correct information, neither the United States Government nor any agency thereof, nor the Regents of the University of California, nor any of their employees, makes any warranty, express or implied, or assumes any legal responsibility for the accuracy, completeness, or usefulness of any information, apparatus, product, or process disclosed, or represents that its use would not infringe privately owned rights. Reference herein to any specific commercial product, process, or service by its trade name, trademark, manufacturer, or otherwise, does not necessarily constitute or imply its endorsement, recommendation, or favoring by the United States Government or any agency thereof, or the Regents of the University of California. The views and opinions of authors expressed herein do not necessarily state or reflect those of the United States Government or any agency thereof or the Regents of the University of California.

For RSI Letters
Sec.

UCRL-16903

UNIVERSITY OF CALIFORNIA

Lawrence Radiation Laboratory
Berkeley, California

AEC Contract No. W-7405-eng-48

# FABRICATION OF SINGLE CRYSTAL TUNGSTEN RIBBON FILAMENTS

F. L. Reynolds

June 1966

# FABRICATION OF SINGLE CRYSTAL TUNGSTEN RIBBON FILAMENTS

F. L. Reynolds

Lawrence Radiation Laboratory
University of California
Berkeley, California

June 1966

Many research efforts require the use of oriented metal surfaces. Filaments that are heated directly or by other techniques have long been of universal value in research. There is no easier method of obtaining high temperatures. The added requirement of many investigators for filaments of known orientation having single crystal surfaces presents the problem of how best to form these filaments and still retain an undamaged single crystal structure.

It has been known for some time that a polycrystalline tungsten filament heated at elevated temperatures will recrystallize. The surface orientation is greatly influenced by the orientation of the wire or ribbon at the time of rolling or drawing. The most likely plane perpendicular to the rolling axis is (110) or within a few degrees of this orientation. The most likely surface plane upon heating tungsten ribbons is (113) or near this index.[1] Many single crystal filaments were made by zone heating polycrystalline tungsten ribbons, and all were found to have surface planes clustered near the (113) orientation.[2] No control was possible on the resulting orientation, and this method was not continued further as a means of producing filaments of specific orientation.

---

1. Joseph Eisinger, J. Chem. Phys. 29, 1154 (1958)
2. F. L. Reynolds, J. Chem. Phys. 39, 1107 (1963)

Using a vapor deposition technique, Weissman and Kinter produced oriented surfaces on a polycrystalline substrate.[3] They worked with cylindrical surfaces and made no attempt to apply their method to ribbon filaments. Although they apparently were not able to obtain a specific orientation, they were successful in achieving a more uniform emitting surface than that obtained from recrystallized tungsten filaments.

According to a recent report, Raymond and Newmann have succeeded in rolling single crystal tungsten billets into a single crystal sheet.[4] It is not apparent from their report whether they could roll single crystal tungsten to foil thickness and have it remain in single crystal form.

After a number of attempts to cut tungsten by various techniques, it was found that the entire process for fabrication of oriented tungsten filaments can be done very satisfactorily on spark-erosion equipment.[5] This method seems to do the least damage to the crystal, and with only a slight final electropolishing the surface gives a clean, sharp Laue pattern of the desired orientation. The technique also provides for an accurate orientation, since a mounted sample for x-ray orientation can be transferred directly to the cutting equipment.

The single crystal tungsten stock, purchased from Linde, comes as a rod approximately 5/8 in. in diameter and 8 to 10 in. in length.[6] A section of the desired length is cut and examined by microscope and x-ray techniques to ascertain the orientation and to check for multiple crystal formation. There are often sections in the rod that show more than one crystal, although the orientation is identical within a degree or two.

---

3. Ira Weissman and M. L. Kinter, J. Appl. Phys. 34, 3187 (1963).
4. L. Raymond and J. P. Neumann, Trans. Met. Soc. (AIME) 233, 1625 (1965).
5. Servomet Spark Machine, Metals Research Ltd., Cambridge, England.
6. Linde Crystal Products Division, Union Carbide Corp.

The ingot is planed to a suitable rectangular shape on a shop surface grinder or on the spark-erosion equipment, the surfaces being near the desired orientation needed for filament material. A slab is cut from the piece using a moving copper wire as the cutting electrode. The slab should be between 1/32 to 3/64 in. thick, since thinner sections have a tendency to curl, especially at rapid cutting rates. The slab is then mounted on a previously planed table. Since this method requires that both the sample and the table be electrical conductors, it was found that the most suitable technique is to temporarily clamp the slab and then apply very small amounts of epoxy resin around the edge. The slab is then allowed to set for at least twelve hours at room temperature before starting to plane it down to a thin section.

The spark erosion planing should be done so as to minimize any surface forces resulting from surface tension. It is advisable to plane off about half the metal thickness, remove the slab, and then plane down to thin sections on the reverse side. In approaching thin dimensions, it is of course imperative to check the work often to make certain that the cutting remains flat and does not slope or taper. Very slight errors in the flatness of the slab become serious when thicknesses of 0.001 to 0.002 in. are desired. The cutting of thin sections should be done at the minimum rate.

When a thickness of 0.002 in. is reached, the slab is removed from the spark-erosion planer and mounted in a tungsten frame as shown in Fig. 1. The purpose of the frame is to prevent attack on the edges of the slab during electropolishing. Electropolishing of tungsten is done by the universal method of using 2 to 5% NaOH solution as the electrolyte and sufficient D.C. voltage to produce a

current plateau. The current density is about 0.1 to 0.2 amp/cm$^2$. The slab is held in the frame by spotwelding small Ni tabs to the frame surface.

After about 0.0005 in. have been removed from each side of the slab by electropolishing, it is ready for the final operation of sliting into filaments of any desired width. Sliting is done on the spark-erosion machine by using a 0.005 in. thick brass sheet as the cutting tool. Cutting time for this operation is rapid. The individual cut filaments are then given a very slight electropolishing to take care of any rough edges that might have been produced in the final slicing operation.

## COMMENT

The final ribbon filaments are quite ductile and may be bent into hairpin shapes if required. The electropolishing is important to remove a slightly damaged surface structure and also to minimize breakage if the filament must be formed into a particular shape. Although the minimum cutting rate on the spark-erosion cutter produces an oriented Laue pattern, the spot shape indicates some surface distortion until the surface is electropolished.

Figure Captions

Fig. 1. Frame for holding tungsten single crystal slab for electropolishing.

Fig. 2. Final cutting of filaments to a desired width by spark cutting technique. The tool is a 0.005-in. brass sheet, with the sample mounted on a small brass table.

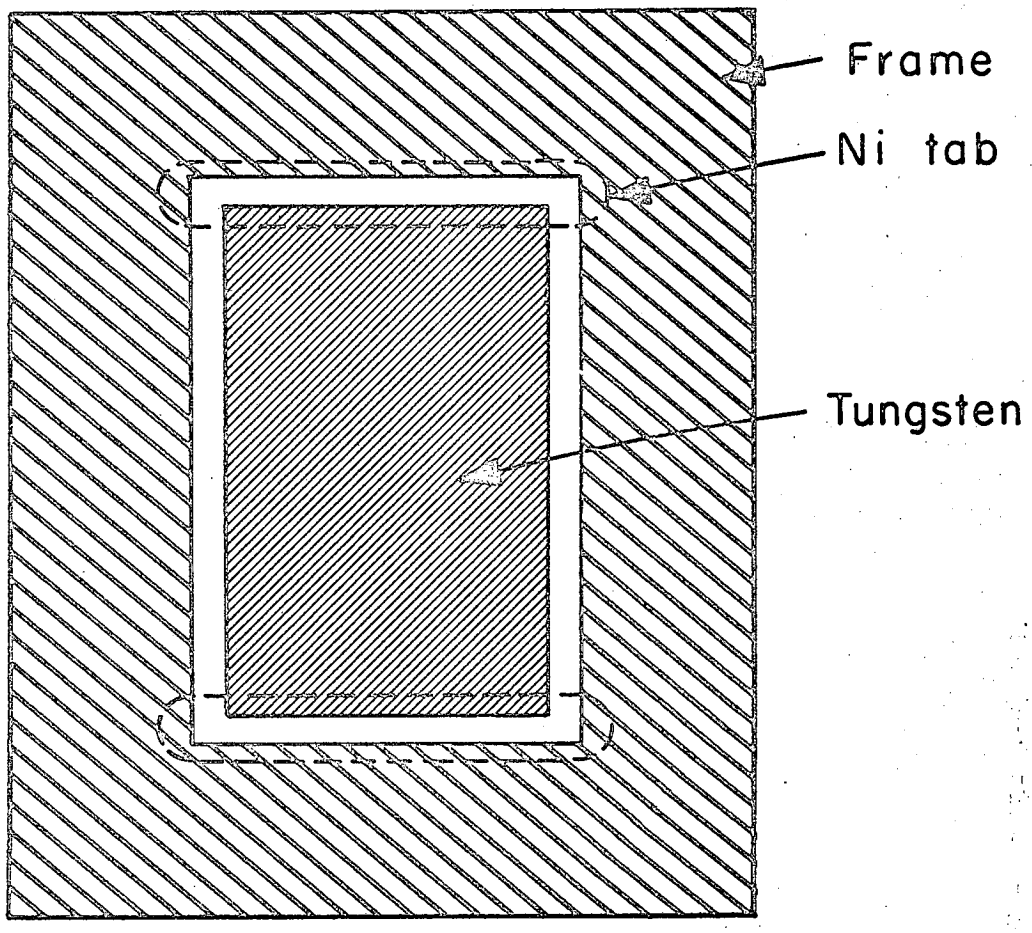


Fig. 1

MUB-11125

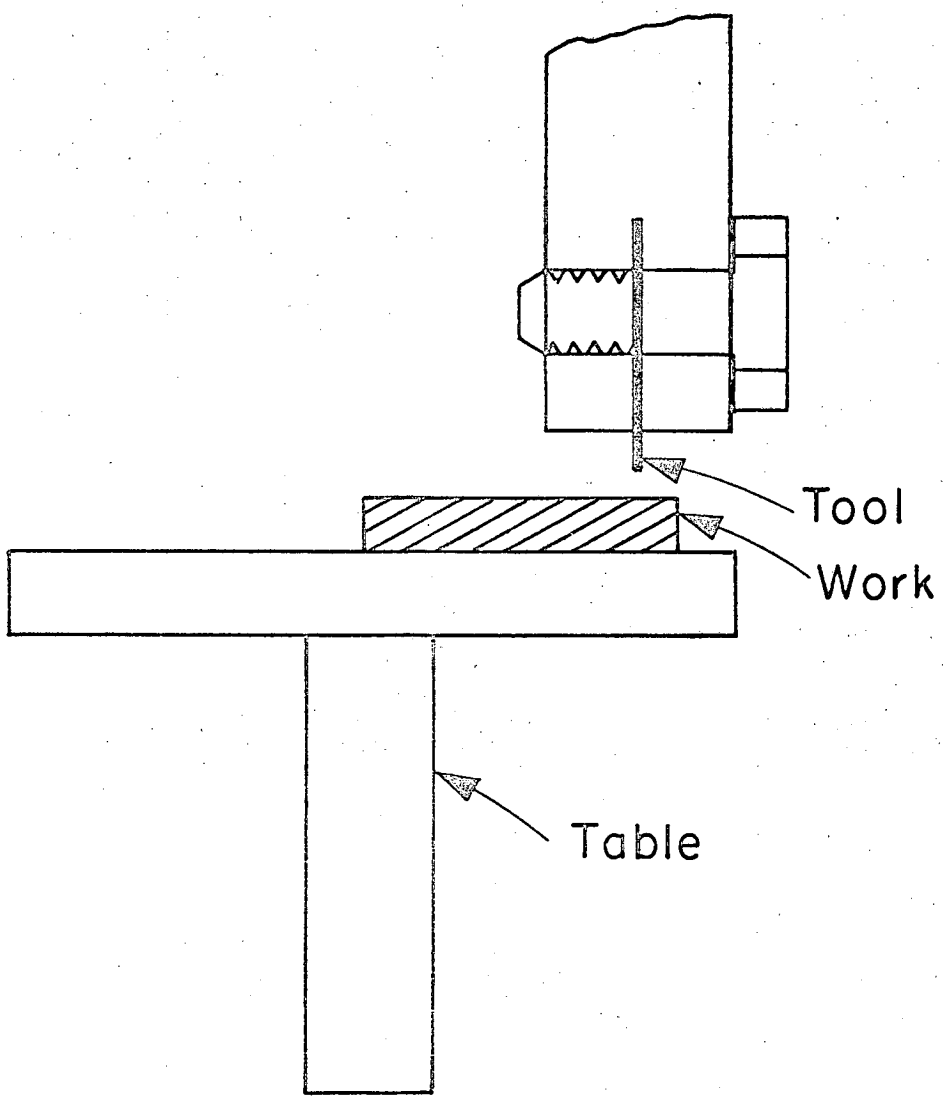


Fig. 2

MUB-11126

This report was prepared as an account of Government sponsored work. Neither the United States, nor the Commission, nor any person acting on behalf of the Commission:

A. Makes any warranty or representation, expressed or implied, with respect to the accuracy, completeness, or usefulness of the information contained in this report, or that the use of any information, apparatus, method, or process disclosed in this report may not infringe privately owned rights; or

B. Assumes any liabilities with respect to the use of, or for damages resulting from the use of any information, apparatus, method, or process disclosed in this report.

As used in the above, "person acting on behalf of the Commission" includes any employee or contractor of the Commission, or employee of such contractor, to the extent that such employee or contractor of the Commission, or employee of such contractor prepares, disseminates, or provides access to, any information pursuant to his employment or contract with the Commission, or his employment with such contractor.