UCRL-16944

University of California
Ernest O. Lawrence Radiation Laboratory

MECHANICAL DESIGN FEATURES OF THE 200 BeV ACCELERATOR

TWO-WEEK LOAN COPY

This is a Library Circulating Copy which may be borrowed for two weeks. For a personal retention copy, call Tech. Info. Division, Ext. 5545

DISCLAIMER

This document was prepared as an account of work sponsored by the United States Government. While this document is believed to contain correct information, neither the United States Government nor any agency thereof, nor the Regents of the University of California, nor any of their employees, makes any warranty, express or implied, or assumes any legal responsibility for the accuracy, completeness, or usefulness of any information, apparatus, product, or process disclosed, or represents that its use would not infringe privately owned rights. Reference herein to any specific commercial product, process, or service by its trade name, trademark, manufacturer, or otherwise, does not necessarily constitute or imply its endorsement, recommendation, or favoring by the United States Government or any agency thereof, or the Regents of the University of California. The views and opinions of authors expressed herein do not necessarily state or reflect those of the United States Government or any agency thereof or the Regents of the University of California.

Submitted to Winter Annual Meeting
The American Society of Mechanical
Engineers - Dec. 1966

UCRL-16944
Preprint

UNIVERSITY OF CALIFORNIA
Lawrence Radiation Laboratory
Berkeley, California

AEC Contract No. W-7405-eng-48

MECHANICAL DESIGN FEATURES OF THE 200 BeV ACCELERATOR

Robert B. Meuser, William W. Salsig, H. Paul Hernandez

June 23, 1966

Mechanical Design Features of the 200 BeV Accelerator

Robert B. Meuser,* William W. Salsig,* and H. Paul Hernandez*

Lawrence Radiation Laboratory
University of California
Berkeley, California

June 23, 1966

ABSTRACT

The Lawrence Radiation Laboratory has designed a 200 BeV accelerator for research in elementary particle physics. A 500-foot linear accelerator injects protons having a kinetic energy of 200 MeV into an 8 BeV synchrotron which in turn injects protons into the main synchrotron. The three-mile-circumference of the main ring contains 984 magnets weighing a total of 18,000 tons to guide and shape the proton beam. A shielded vehicle employing master-slave manipulators will be used by maintenance personnel in regions of high residual radioactivity. Special surveying techniques have been developed for aligning the magnets to the required 0.010 inch accuracy. Proton beams may be extracted from the main ring and directed to either of two areas where the experiments are performed. Secondary particles, produced by causing the protons to strike a target, are sorted and guided by dc magnets to their final destinations. Superconducting magnets may prove economical for this purpose.

---

*Mechanical engineer, Lawrence Radiation Laboratory, University of California, Berkeley, California.

INTRODUCTION

The discovery of the strong-focusing principle* in the early fifties led to a new generation of proton accelerators. The successful operation of the strong-focusing proton synchrotrons at CERN, Switzerland, and at Brookhaven, New York, at the beginning of this decade demonstrated the feasibility of the principle. Even in the mid-fifties, however, the need for higher-energy experiments and the feasibility of extending the strong-focusing concept to higher-energy accelerators were anticipated.

In February 1962, and again in December 1962, the Lawrence Radiation Laboratory submitted proposals to the Atomic Energy Commission requesting authorization to conduct a design study for a new accelerator in the energy range of hundreds of BeV. These proposals and others were considered in the context of the national program in high energy physics by a scientific advisory panel appointed by the

---

*A strong positive horizontal gradient of the magnetic field will produce a focusing effect in the horizontal plane, but a defocusing effect in the vertical plane. A negative gradient will have the opposite effect. By alternating the sign of the gradient from one magnet to the next in a sequence of magnets, the effects do not cancel as one might expect, but instead a net focusing effect is produced in both directions. This is the basis for the "alternating gradient" or "strong" focusing principle, so called because it is much more powerful than other focusing means. The greater focusing power substantially reduces the beam dimensions and permits corresponding reductions in the size of the magnets.

General Advisory Committee to the Atomic Energy Commission and by the President's Advisory Committee.

Among the panel's conclusions was the recommendation that the Lawrence Radiation Laboratory Proceed with the study of a machine in the 200 to 300 BeV range, and the study was authorized in April 1963.

A team including many mechanical engineers was formed to perform the study, and in June 1965 produced a detailed 4-inch-thick report containing a preliminary design for the entire machine. In mid-1965 the AEC contracted with Daniel, Urbahn, Seelye, and Fuller to develop designs for the conventional facilities and to produce a cost estimate. Meanwhile, proposals for several hundred sites for the accelerator had been submitted to the AEC. A committed responsible to the AEC had narrowed this to six in March 1966. The final site selection may occur between the writing and presentation dates of this paper.

The LRL group has continued the design study. The information presented here is current, but by no means is the design complete.

GENERAL DESCRIPTION

The accelerator consists primarily of the following components, listed in the order seen by the beam (see Figs. 1 and 2):

1. Ion source: uses electrical discharge to ionize hydrogen gas to produce protons.

2. Cockroft-Walton-type dc accelerator: a dc potential of 750 kV applied to the ion source accelerates the ions directly in one step.

3. Alvarez-type linear accelerator: an electrically resonant cavity produces an electric field which alternates in directions at a frequency of

200 MHz. "Drift tubes" hide the protons when the field is in the wrong direction and expose them to the electric field when it is in the proper direction to accelerate the particles. In passing through the 150 drift tubes in the 500-ft-long cavity the protons attain a kinetic energy of 200 MeV.

4. Injector synchrotron: A 647-ft-diameter ring of 80 electromagnets confines the particles to a circular path. Several rf systems, acting much like linear accelerators, accelerate the particles. Simultaneously, the field in the magnets is increased to accommodate the increasing centrifugal force on the particles. Acceleration continues until the protons attain an energy of 8 BeV.

5. Main synchrotron: The 4530-ft-diameter main ring contains 984 magnets totaling 19 400 tons arranged in 12 groups. Between adjacent groups are 112-ft "long straight sections"--clear spaces which provide convenient places for injecting, accelerating, and extracting the beam and for performing physics experiments.

Because of the high radiation produced by stray particles, the entire accelerator is heavily shielded. Shielding of the main ring enclosure is provided by 18 to 40 ft of earth.

OPERATING CYCLE

Protons, delivered at an energy of 750 keV from the dc accelerator, are accelerated to an energy of 200 MeV by the linear accelerator. The protons are then injected in batches into the injector synchrotron, which increases their energy to 8 BeV. This process is repeated with a new batch of protons at the rate of 18 times per second. Seven successive batches of 8-BeV protons are transferred to the main ring

while the field strength in the main-ring magnets is held constant. When injection into the main ring has been completed the particles are accelerated by the electrostatic fields provided by the rf system, and simultaneously the magnetic field is increased until the final energy, 200 BeV, is attained. The acceleration process is accomplished in 0.8 sec after 55 000 circuits around the ring, and may be repeated as often as once every 2.0 sec.

After the beam has been accelerated to 200 BeV, (a) it can be allowed to impinge upon a target placed in one of the long straight sections, or (b) it can be extracted from the main ring and directed by an array of magnets to one of several targets at locations remote from the main ring. The secondary particles produced by the interaction of the proton beam with the target are then used in physics experiments.

USE AS A RESEARCH TOOL

The experimental physicist causes the beam of high-energy protons to strike a metal target. In the days of "nuclear physics" he was interested in the reactions that occurred at the target. The "high-energy physicist" of today uses the reactions that occur at the target simply as a tool. When the protons strike the target many kinds of elementary particles are produced having a wide range of energies. Using electric and magnetic fields and absorbers, he can discard all particles except those of a particular kind and energy. These selected particles are then caused to interact with targets, and it is the results of these secondary interactions that are studied--the kinds of particles produced, their directions and energies, --and possible also their mode of decay.

NEW FEATURES

The 200 BeV accelerator contains a number of new features. One of these is the use of a small synchrotron as an injector for a larger one. Another is the incorporation of the 12 "long straight sections," each of which is a region 112 ft long devoid of any magnets. An important feature is the great reliance on extracted proton beams. This will be the first accelerator to have extracted beams included in the initial design--at previous accelerators extracted beams have been added after operation of the main machine has begun.

INTERCOMPONENT ENERGIES

After the accelerator's energy of 200 BeV and current of 3×10^{13} protons per sec were selected, there remained many variations in the possible structure of the accelerator. The 200 BeV accelerator consists of a number of subaccelerators. The types of subaccelerator had to be determined and the optimum output energy of each of these had to be selected.

The first study considered only proven designs for which the cost could be easily determined. As the study progressed, more sophisticated designs were considered while the designers kept in mind that the cost and reliability become more uncertain as the accelerator becomes more complex.

ALTERNATING-GRADIENT MAGNET SYSTEMS

Once the general design is selected, there are still many ways in which the alternating gradient magnets can be arranged. The arrangement must provide suitable focusing effects and straight sections of

suitable length and location to allow the beam to be brought in and out of the accelerator, and also to allow the location of correcting elements and radio-frequency accelerating stations.

The choice must be made between "C" magnets (as shown in Figs. 3 and 4) and "H" magnets having half of the flux return path on each side of the air gap rather than all on one side. Many factors enter into the selection--cost of magnets, accessibility to the vacuum chamber for future addition of instrumentation, size of the enclosure, etc. The H magnet has many advantages, but currently the balance is in favor of the C magnet. If C magnets are chosen, one still has to choose between using (a) alternating "open" C magnets (as shown in Fig. 3) and "closed" C magnets (having the flux return path on the same side but the poles slanting in the opposite direction from those of the open magnets, to achieve the alternating-gradient effect), and (b) identical magnets, but placing the flux return yoke alternately on the inside and the outside of the ring. For the injector synchrotron the former course was chosen and, in fact, within each magnet there is both a "closed" and an "open" section. For the main ring, however, the latter scheme prevailed and, furthermore, a stronger focusing effect was obtained by reversing the gradient only every second magnet. In the interest of economy the magnets are made as long as is practical, without incurring excessive deflections and difficult fabrication and handling problems.

The shaping of the cross section of the magnet core is a difficult task. The contour must be such that the magnetic field has the proper shape in all of the usable region of the gap and at all levels of excitation. In the interest of getting the most for one's money the intensity of the

magnetic field must be as high as possible without letting saturation effects become intolerable. Digital computer techniques have been applied to this problem(Fig. 5). Computer programs have been developed which give the magnetic field in the iron, copper, and air gap and which include the variable permeability of the iron. End effects are not included, but they are relatively unimportant because the magnets are so long. The use of the computer has made it possible to rapidly investigate the effects of changes in the design. The result is that the peak field in the center of the gap is 15 100 gauss, higher than in previous accelerators.

The magnet cores are laminated of 1/16-in.-thick carburized steel laminations insulated from each other. The laminations must be manufactured to a tolerance of 0.001 in. at the pole tip. The laminations are held together with eight bars welded to the laminations and to heavy end plates. The variations of the welded core block in position, including all the manufacturing tolerances, the elastic deflections, and the thermal deflections, are limited to the following: (a) The twist in the core must be less than 1 milliradian in the 18.5-ft length of the core; (b) the vertical and horizontal center lines of the gap must lie within a 0.025-in.-radius cylinder.

Before the laminations are assembled they will be shuffled to reduce the magnetic and thickness variations. Because of the large area that would be required to shuffle 20 000 tons of steel laminations, they will be shuffled in four groups.

Magnetic coils are made of high-conductivity hollow copper conductor. The coils are water-cooled, and the temperature rise in the

water is limited to 10° C to ensure low thermal deflections in the coil and core. Radiation effects on the coil insulation can be lessened by adding finely divided alumina to a fiberglass-reinforced, high-heat-distortion epoxy resin, as was done at the Stanford Linear Accelerator.

As primary elements of the main ring magnet system there are, in addition to the 480 main gradient magnets, a short gradient magnet and a quadrupole magnet (Fig. 6) adjacent to each straight section.

In addition to the 528 primary elements, 456 quadrupoles (Fig. 6), sextupoles (Fig. 7), and bending magnets are used for correcting the beam shape and position.

RADIO-FREQUENCY SYSTEM

The rf accelerating system of the main ring uses a standing half-wave folded coaxial resonant cavity. There are three rf stations, each of which has 14 cavities for a total of 42, of which 7 are spares. To keep the voltage in step with the beam as its velocity increases, the frequency changes from 51.97 MHz to 52.26 MHz during the magnet's 1-sec rise time.

The rf system for the injector synchrotron has 24 cavities distributed in 8 locations. The frequency change is much larger, and varies from approximately 30 to 52 MHz. The resonant frequency of the cavities is controlled by changing the rf permeability of approximately 9 tons of ferrite. This change occurs 18 times per sec. The mechanical problems in the rf system include the vacuum tightness of large ceramic-to-metal seals, and removing the heat produced in the ferrite by magnetic hysteresis.

MAIN RING VACUUM SYSTEM

The maximum operating pressure is determined by considerations of beam loss, which can be kept below 0.1% if the average pressure around the ring is less than 3×10^{-7} torr. In the main ring an all-metal vacuum system is used to avoid materials subject to radiation damage. The vacuum chamber cross section is elliptical, with an inner diameter of 12 cm horizontal by 5 cm vertical. To maintain the pressure will require about 283 sputter-ion pumps of 50 liters/sec pumping speed. The roughing system will utilize 36 mechanical and turbomoledular pumps.

The vacuum chamber must fit around the beam as closely as possible, and also into the magnet gap very closely, so that the magnet gap, which is very expensive, can be minimized.

INJECTOR-SYNCHROTRON VACUUM SYSTEM

The design of the injector-synchrotron vacuum system is strongly influenced by the rapid-cycling magnetic field and by considerations of radiation damage. The eddy currents in the walls of an all-metal vacuum chamber would give unacceptable field distortions at injection. A chamber utilizing organic materials would be subject to severe radiation damage by the large flux in this accelerator. The injector synchrotron will therefore utilize a ceramic vacuum chamber in the magnet sections (about 55% of the circumference), with a high-resistance conducting coating on the inside to eliminate the buildup of charge on the surface. The ceramic chamber is elliptical in cross section (16.4×6.4 cm). In the straight sections (about 30% of the circumference) there will be an

all-metal chamber of circular cross section. The remaining 15% of the circumference will include the evacuated rf cavities and special vacuum housings for kicker and septum magnets. The design pressure is 3×10^{-7} torr, like that of the main synchrotron.

The use of a ceramic vacuum chamber for high-repetition-rate accelerators is currently under development at several laboratories. A vacuum tank of similar design has just been tested in the Cambridge Electron Accerlerator, and we at LRL have performed tests that have proven the feasibility of the ceramic chamber.

The ceramic is isostatically placed over an elliptical mold. After a low-temperature firing, the outside of the ceramic is machined to an elliptical shape on a lathe and then fired. The ceramic pieces are about 30 in. long and have thin cupro-nickel flanges furnace-brazed on the ends. The approximately 30-in.-long ceramic sections are then joined by welding the metal flanges together.

ALIGNMENT

When the beam is injected into the synchrotron it is inevitable that some of the particles enter at positions and angles which are different from those of particles at the center of the beam. As a result of the "strong focusing" character of the shapes of the magnetic fields of the guide magnets, the particles receive a restoring-force component which is proportional to the distance of the particle from the equilibrium path. This causes the particles to execute vertical and lateral "betatron" oscillations around the equilibrium path; 16.75 cycles occur in one circuit of the particle around the main ring's 3-mile circumference.

In addition there are "synchrotron" oscillations, which are longitudinal deviations resulting from the acceleration process and which cause further deviations from the equilibrium path. Inaccuracies in the positions of the magnets result in increased amplitudes which, if excessive, cause the beam to strike the wall of the vacuum chamber and become lost. In deciding how much space to allow for the effect of alignment inaccuracies one must balance the cost of the survey and alignment precision against the cost of magnet aperture, which is about $4 million per cm. Much thought has gone into this decision, with the result in the aperture allocations appearing in Table I.

Shown in Table I also are the survey and alignment errors. Note that the amplification factor between alignment error and the associated aperture allowance is of the order of 100.

A high degree of assurance of correct alignment is required at the beginning, since no further corrections can be made until the particle beam is actually circulating in the machine. At that time the beam position may be measured with precision estimated to be within 0.1 mm, appropriate corrections may be calculated, and the magnets repositioned to obtain a less distorted particle orbit.

The alignment requirements shown in the table are near the upper limit of what can be obtained from today's precision survey equipment expertly applied. Several novel schemes have been proposed and tested to make the process less time-consuming. For example, a continuous mercury-filled level tube, electronically monitored, has been demonstrated to be a suitable horizontal reference plane.

Positions of magnets on a horizontal plane could be obtained from a permanently installed grid of wires located at the surface of the ground above the accelerator. (See Fig. 8.) Such sophisticated systems are expensive; whether or not they are worth while depends upon how many realignments are anticipated during the accelerator's life, and this, in turn, depends upon foundation conditions. Since the site is not yet selected, no final survey system choice has been made.

MAGNET SUPPORT SYSTEM

In early studies consideration was given to sites having compressible soil. An acceptable, although expensive, support scheme was devised, consisting of groups of piles supporting the ends of long beams upon each of which rested four magnets.

For sites where bedrock is at or very near the surface an entirely different and less expensive foundation approach is possible. Footings can be supplied directly under the magnet quarter-points. Ordinary dry-lubricated jacks may be used for positioning.

A refinement that will greatly reduce the accelerator's sensitivity to small random position errors is to mount each magnet on a short beam, the ends of which are carried on footings between magnets. In this way, the number of support stations and therefore the number of positions requiring adjustment would be reduced by a factor of two.

HANDLING SYSTEMS

The 200 BeV accelerator differs from all other large atom smashers in that it is known from the inception that particle beam intensities will be sufficiently high so that residual radiation will be a

significant servicing problem. Unshielded personnel may not work in approximately 5% to 10% of the circumference, primarily at target areas and beam extraction stations. Fortunately, this residual radiation will build up slowly over several years, so it will not be an impediment during the early debugging period.

This high residual radiation requires that as many components as possible be removed from the tunnel. For example, there is radiation shielding between the rf system and the accelerating cavities which are in the enclosure. The residual radiation also requires the provision of ample space for shielded servicing vehicles, and the erection of temporary radiation shielding. Accelerator components must be designed from inception to be handled by remote means.

If the C magnet becomes the final choice for guide field, servicing operations must cope with an opposite-handled system. The magnets will alternate in pairs between facing the inner or the outer wall of the enclosure. In low-radiation-level regions, where personnel may work unshielded, the open side of the C magnets will have an appreciable residual radiation, which would severely restrict a technician's working time. If components requiring service--such as water connections, electrical interlocks, etc.--are placed behind the yoke of the magnet, significant self-shielding is obtained--the man can work 10 times as long as on the open side. This requires that servicing space be provided on both sides of the magnet ring.

In high-radiation-level regions the technicians must be enclosed behind several inches of dense shielding. To so enclose one man the shielding needed will be about 25 to 30 tons. A railroad-type vehicle

has been selected as the most practical solution. This vehicle must be able to operate on either side of the magnet ring and reach any component, since any portion of the accelerator can become unexpectedly radioactive. The source of such unexpected radiation will be detected and corrected, but local regions, particularly at beam extraction stations, must be expected to remain radioactive.

It is considered highly desirable to have a shielded man carry out servicing operations as nearly as possible as though he were unshielded. Therefore, practically all servicing operations are to be executed by specialized extension tools passing through the wall of the vehicle. This approach means the operator will retain "feel," and a considerable degree of guidance and manipulating capability, just as if he were unshielded. It is believed this approach will reduce, by at least half, the time it would take to execute the same operations with fully remote manipulators. Figures 9 and 10 represent the shielded service vehicle. Operating wooden mock-ups have been prepared, to evaluate the proposed system and to aid in developing the design of the numerous components which will have to be so serviced.

To provide some universal capability, a pair of conventional manually operated master-slave manipulators will also be incorporated. These devices will be useful for such operations as holding inspection mirrors, local lighting fixtures, or even TV monitors, as well as for picking up dropped parts of foreign materials.

The overhead crane right-or-way provides a second dimension for future remote handling, specialized to future operating requirements. It may be highly desirable to do certain jobs while the accelerator is

acutally operating, for instance, closed-circuit TV inspection, or change of target or probe positions. Since such requirements cannot, at this time, be foreseen in detail, it is highly advantageous to have this second right-of-way which could be developed independently from the currently anticipated accelerator maintenance and repair requirements.

Overhead cranes will be supplied in paired 20-ton units. Coupled together they can handle the 40-ton magnet. Separated they provide twice the handling facility for smaller jobs. The cranes are particularly valuable in being able to work with the shielded vehicles, a feature which other floor-mounted handling facilities could not provide.

In addition to the manipulator vehicles, a second type, more lightly shielded, is proposed. These will be known as "work center vehicles;" they will transport crews to station, and will be movable tool rooms and engineering drawing libraries as well as local electrical power and lighting distribution stations. They will also be locomotives for heavy load handling. The light shielding will provide a region where supervisors and key personnel, who always work long hours during times of trouble, can be protected from even the low radiation levels. These vehicles and the cranes may be seen in Fig. 11.

EXPERIMENTAL AREAS

The beam may be caused to strike a target inserted into the main ring or may be extracted from the ring and sent to either of two "external proton beam" (EPB) areas. The short EPB area is illustrated in Fig. 12.

Targets may be inserted into the beam by remote-controlled actuators at several positions between magnets. Those magnets

downstream from the targets deflect both the unabsorbed protons and the secondary particles knocked out of the targets. The primary beam has a power of 480 kW, and in addition would make anything on which it impinges intensely radioactive, so its disposal must be accomplished with care. A water-cooled "back stop" will be provided to absorb the primary beam.

The target magnets are pulsed in step with the main-ring magnets so that protons extracted from the main ring at all energies will pass along the same path. Although the frequency is low (30 cycles/min) the magnet cores must be laminated from 1/2-in. low-carbon plate to avoid excessive eddy-current effects. The outer surface is air-cooled to remove heat generated by the core losses. The largest of the target magnets is 8 ft high, 8 ft thick, and 10 ft long, and weighs 300 tons. The vacuum chamber through which the beam passes bounds the magnet apertures. The maximum cross section is 8×60 in. Radiation damage effects preclude the use of organic materials in the chamber walls unless they are heavily shielded. If metal is used for the vacuum barrier, eddy-current considerations demand that it only be 0.020 in. thick--the structural strength must be provided by other means. Part of the laminated yoke will be placed inside the vacuum chamber to serve as a structural member.

The vacuum chamber will be in sections, one section per magnet. Gasketed joints between sections receive high radiation fluxes--too high for organic gaskets to tolerate. All-metal gaskets have been used for large rectangular flanges of this nature, but the bolting forces are large--or the order of 1000 lb/in. This makes them difficult to service

by means of manipulators. A possibility is a cast-in-place, low-melting-alloy joint which can be melted out by built-in heaters to break the joint.

After the beams of secondary particles emerge from a target they are guided to their final destinations by "beam transport" magnets. These consist primarily of bending magnets and quadrupole lenses, and they operate on dc. It is estimated that by 5 years after turn-on about 100 such magnets will be needed. Their total cost, including power supplies, may be $8.7 million and their power consumption about 90 000 kW, costing $2.3 million per yr. During the past 5 years the superconducting magnet has emerged as a practical device for many pruposes. It appears that there may be distinct economic advantages to using superconducting beam-transport magnets. This will reduce the power requirements for the experimental areas, which represent half of the power requirements of the whole machine, by a factor of 20. Even if we decide to go to superconducting magnets, there will still be many magnets of the conventional type, especially the smaller, low-powered ones.

There is also the possibility that by going to very high fields, practical only with superconducting magnets, different kinds of physics experiments can be performed. Intensive investigation will be required to evaluate this possibility. Although there are serious problems to be solved, we can hardly turn our back on this exciting new technology.

SPECIAL REQUIREMENTS

In addition to typical mechanical engineering, accelerator engineering embraces many fields for which mechanical engineers are not often trained--cryogenics, high-vacuum technology, superconducting magnet technology, and particle beam optics.

The mechanical design of a very-high-energy accelerator presents many challenging problems. Only by the exercise of the utmost skill by all concerned will a machine be produced which is both economical and reliable.

Table I. Allocation of vacuum chamber aperture to accommodate oscillations and orbit distortions.

	Aperture at injection			
	Horizontal		Vertical	
	Std. deviation of disturbance	Aperture allowance[a] (in.)	Std. deviation of disturbance	Aperture allowance (in.)
1. Beam-orbit characteristics				
Betatron oscillations and injection errors		2.0		0.7
Synchrotron oscillations and tracking errors		0.6		--
Sagitta of magnet units		0.4		--
Subtotal		3.0		0.7
2. Magnetic-field variation of magnet units	± 0.04%	0.4		0.1
3. Survey and alignment				
Primary survey (144 monuments)	Turning angle ± 2 sec, or sagitta ± 0.006 in.	0.6	Optical survey, ± 2 sec in first-difference elevation	0.4
Transfers	± 0.003 in. rms	0.1		--
Fiducial errors	± 0.004 in. rms	0.3		0.3
Subtotal in quadrature		0.7		0.5
4. Stray field	0.1 gauss	0.2		0.2
Quadrature sum, items 2, 3, and 4		0.8		0.55
5. Allowance for "insurance"		0.9		0.75
Total aperture (bold face items)		4.7		2.0

a. Full-aperture allowance for 75% assurance, taking $2a = 4.5\ \sigma_b$

FIGURE LEGENDS

Fig. 1. Aerial view of the 200 BeV accelerator.

Fig. 2. Schematic layout of the accelerator.

Fig. 3. Main ring gradient magnet, cross section.

Fig. 4. Main ring gradient magnet assembly.

Fig. 5. Computer-drawn flux plot for main ring gradient magnet. Only the upper half is shown.

Fig. 6. Quadrupole magnet cross section.

Fig. 7. Sextupole magnet cross section.

Fig. 8. Survey system for main ring.

Fig. 9. Shielded service vehicle shown in two positions in the main ring.

Fig. 10. Shielded service vehicle, showing direct use of hand tools.

Fig. 11. Main ring handling systems.

Fig. 12. External proton beam target station; plan view.

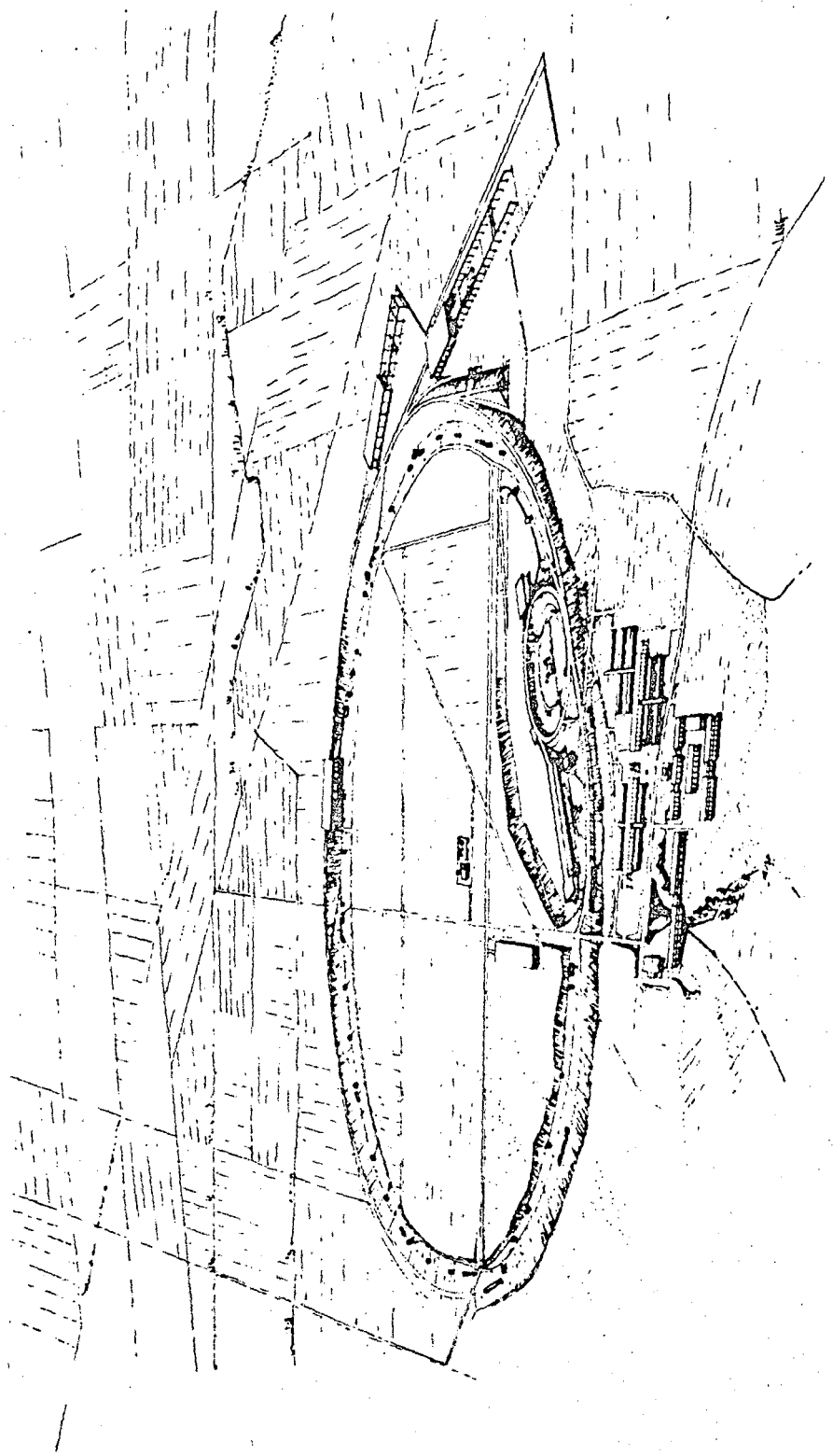

MUB-6634

Fig. 1

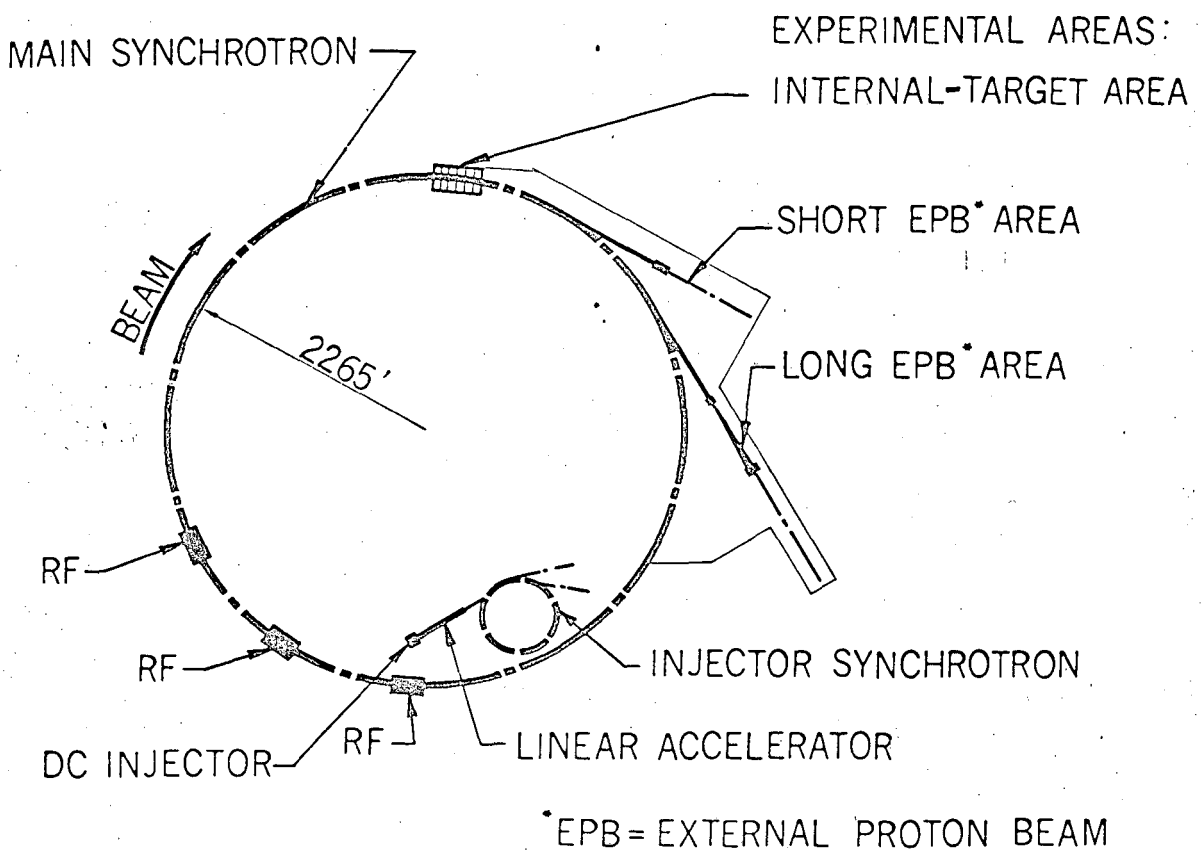

Fig. 2

MUB-6350-A

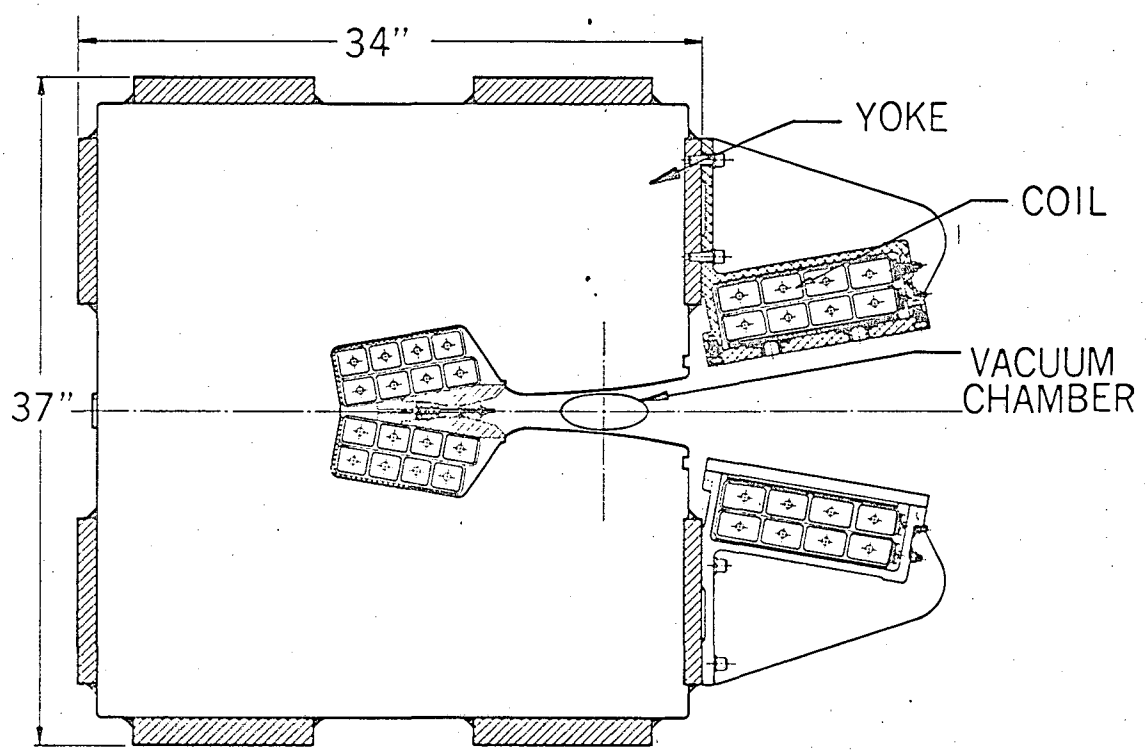

MUB-5726-A

Fig. 3

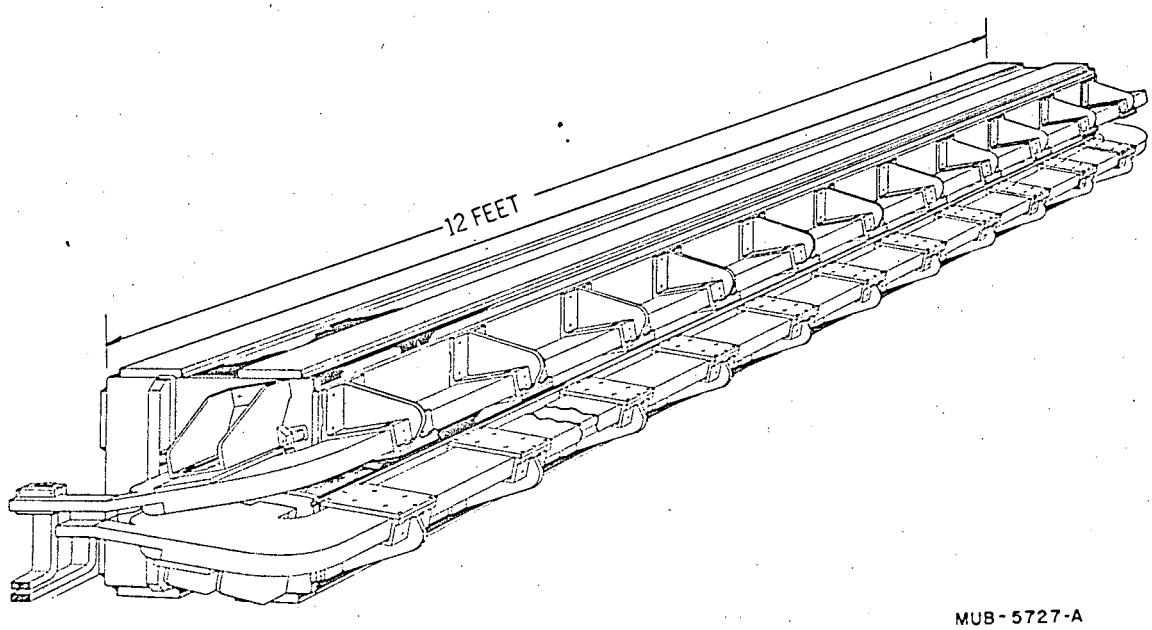

Fig. 4

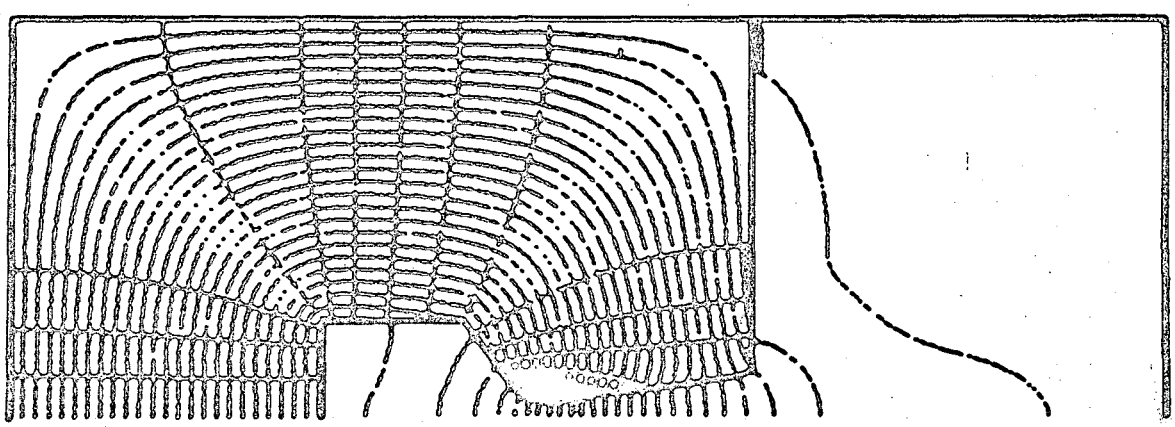

Fig. 5

MUB-5715-A

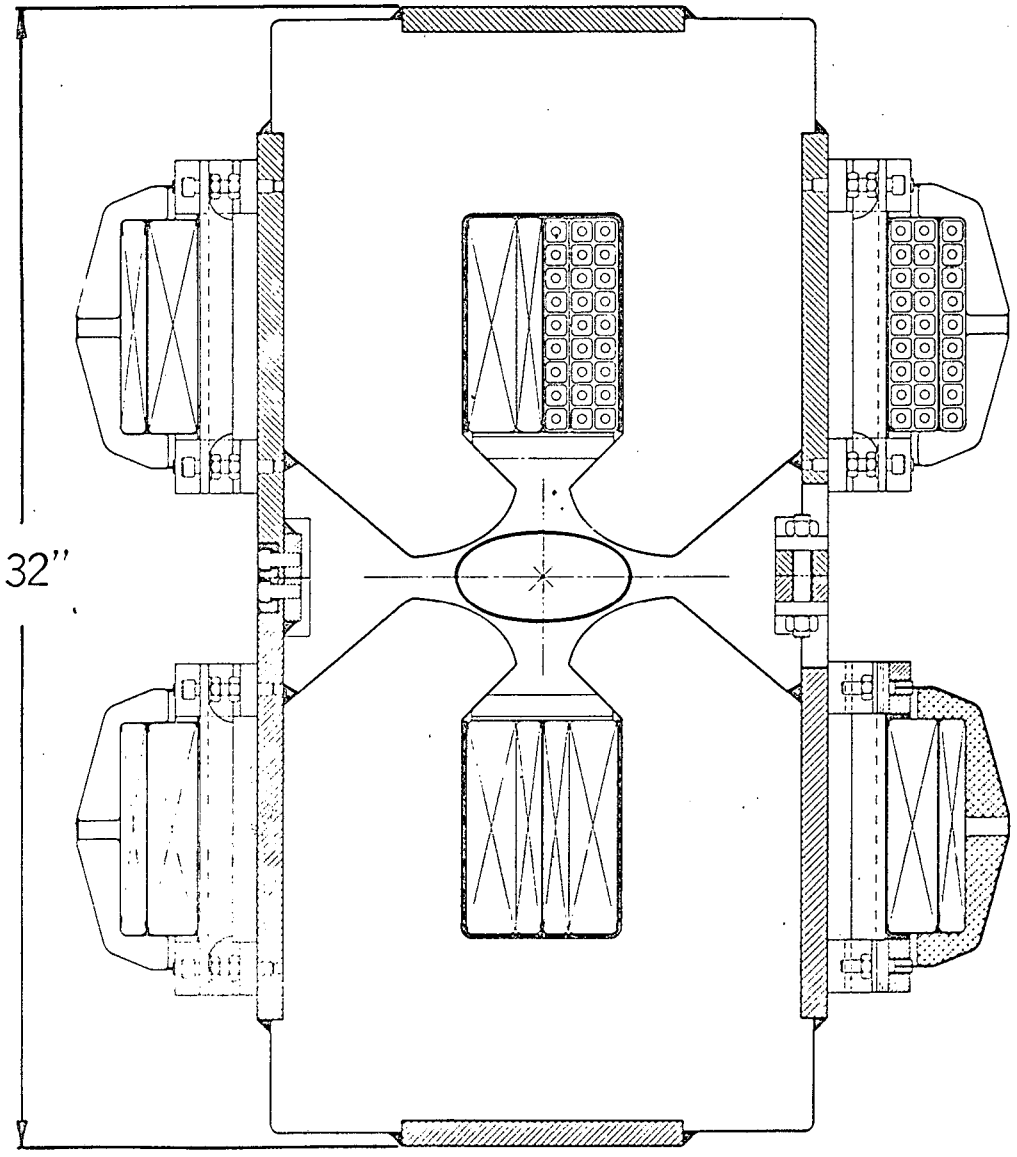

MUB-5724-A

Fig. 6

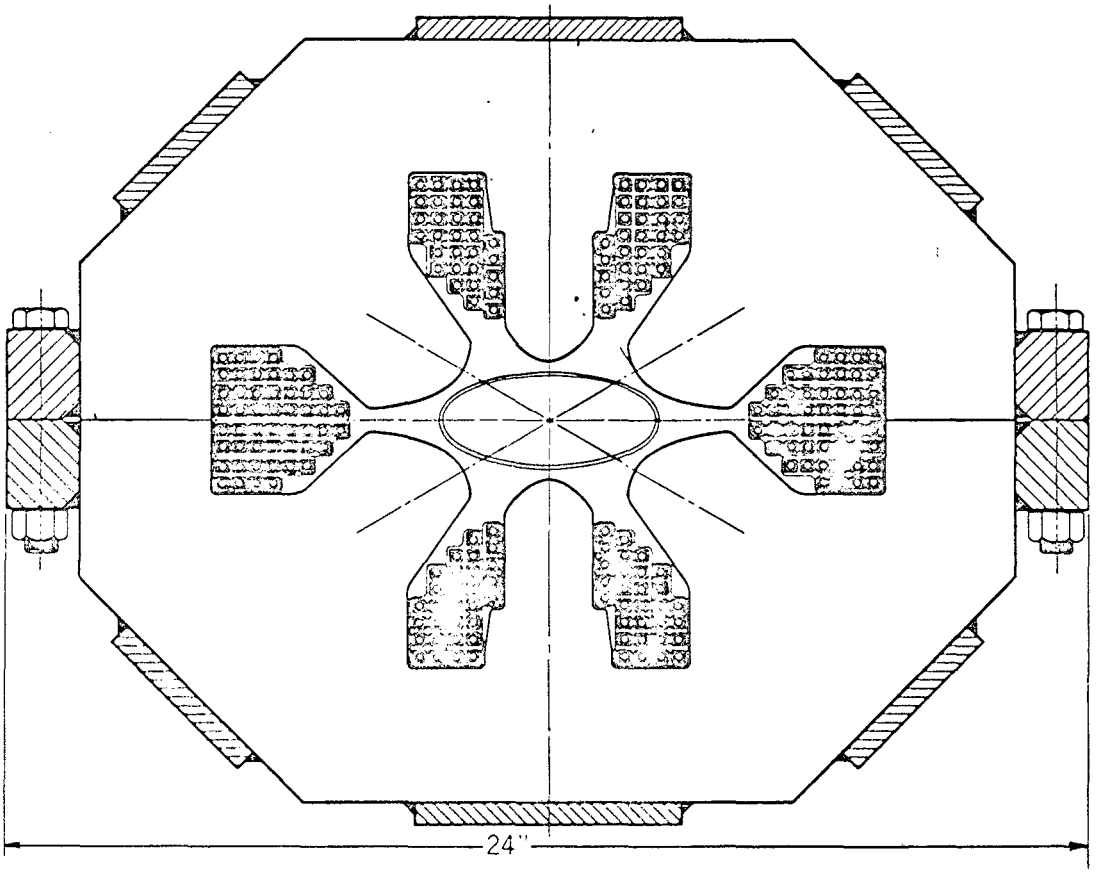

MUB-5729-A

Fig. 7

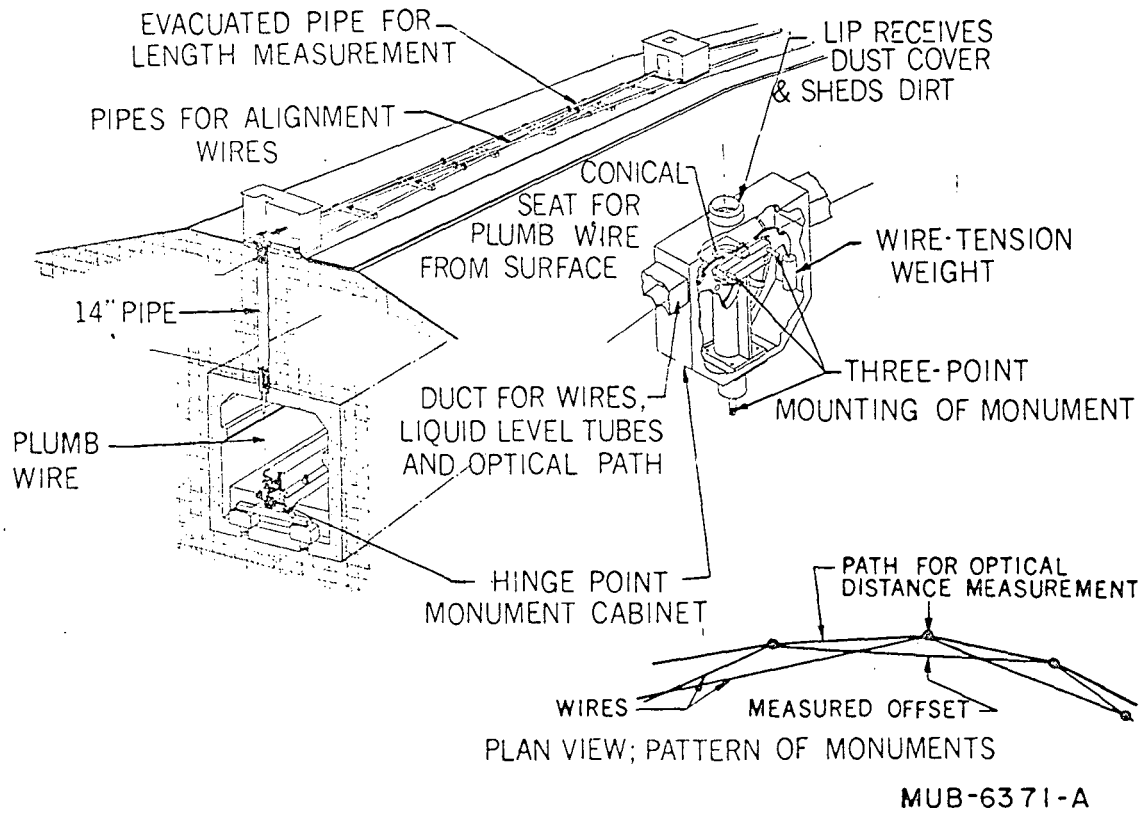
EVACUATED PIPE FOR LENGTH MEASUREMENT
PIPES FOR ALIGNMENT WIRES
LIP RECEIVES DUST COVER & SHEDS DIRT
CONICAL SEAT FOR PLUMB WIRE FROM SURFACE
WIRE-TENSION WEIGHT
14" PIPE
THREE-POINT MOUNTING OF MONUMENT
DUCT FOR WIRES, LIQUID LEVEL TUBES AND OPTICAL PATH
PLUMB WIRE
HINGE POINT MONUMENT CABINET
PATH FOR OPTICAL DISTANCE MEASUREMENT
WIRES
MEASURED OFFSET
PLAN VIEW; PATTERN OF MONUMENTS
MUB-6371-A

Fig. 8

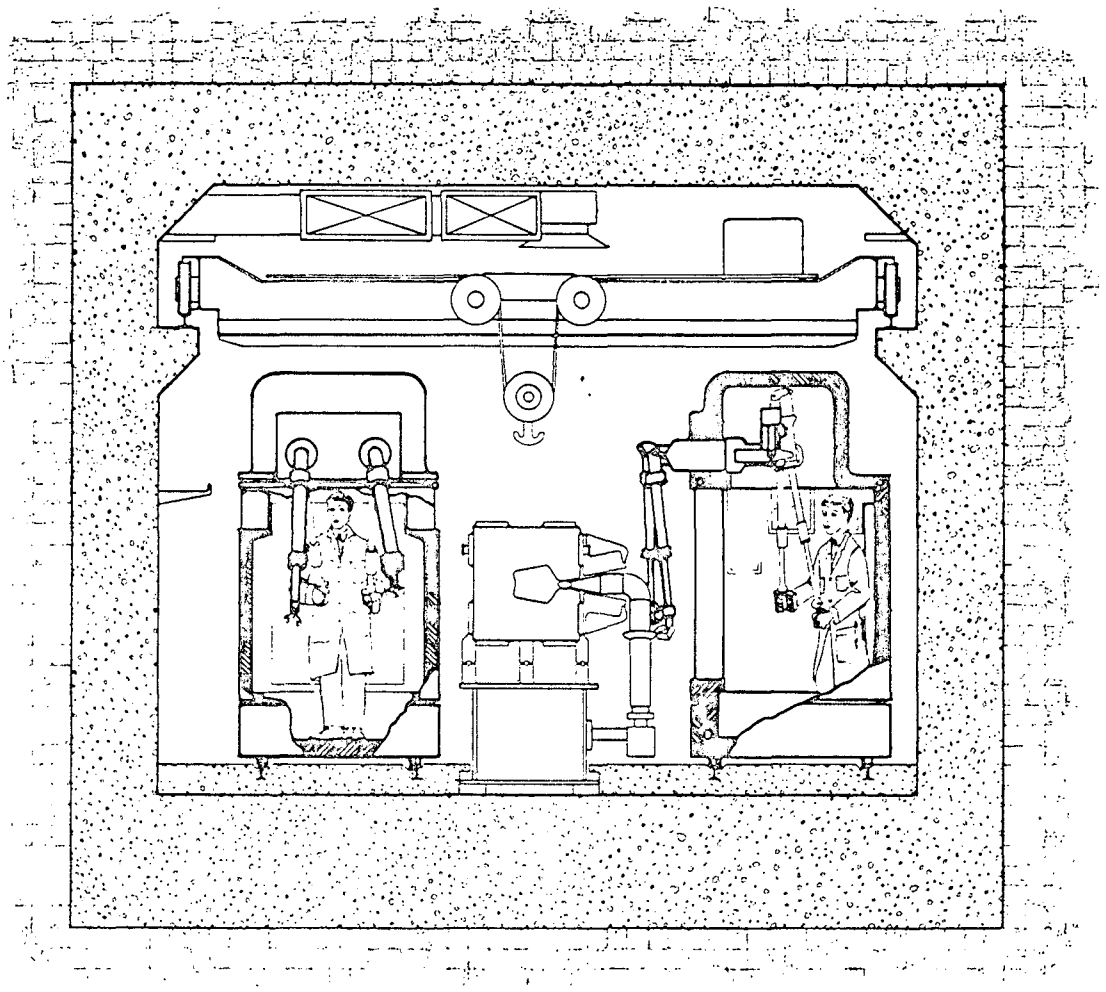

MUB-9048-A

Fig. 9

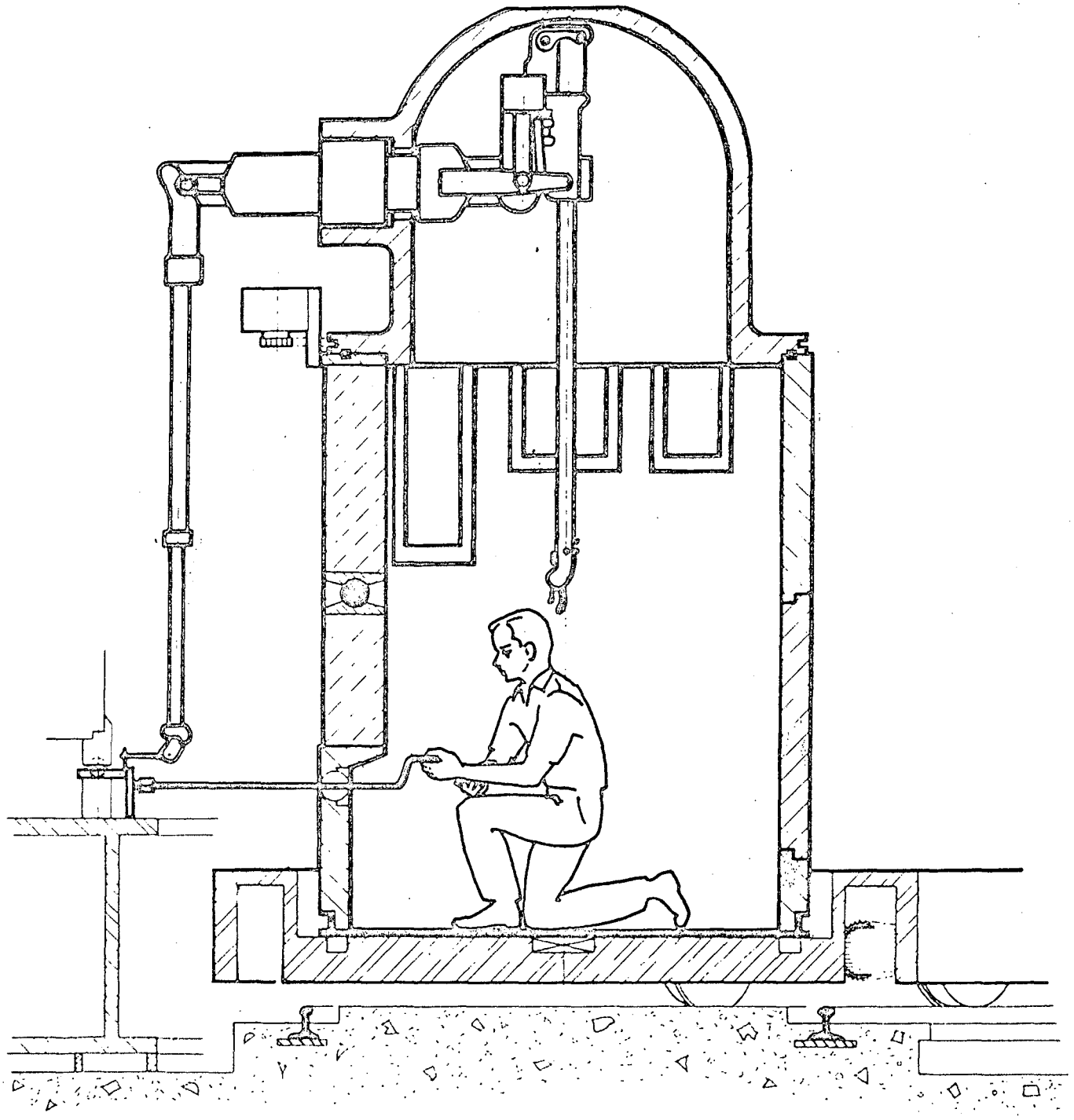

Fig. 10

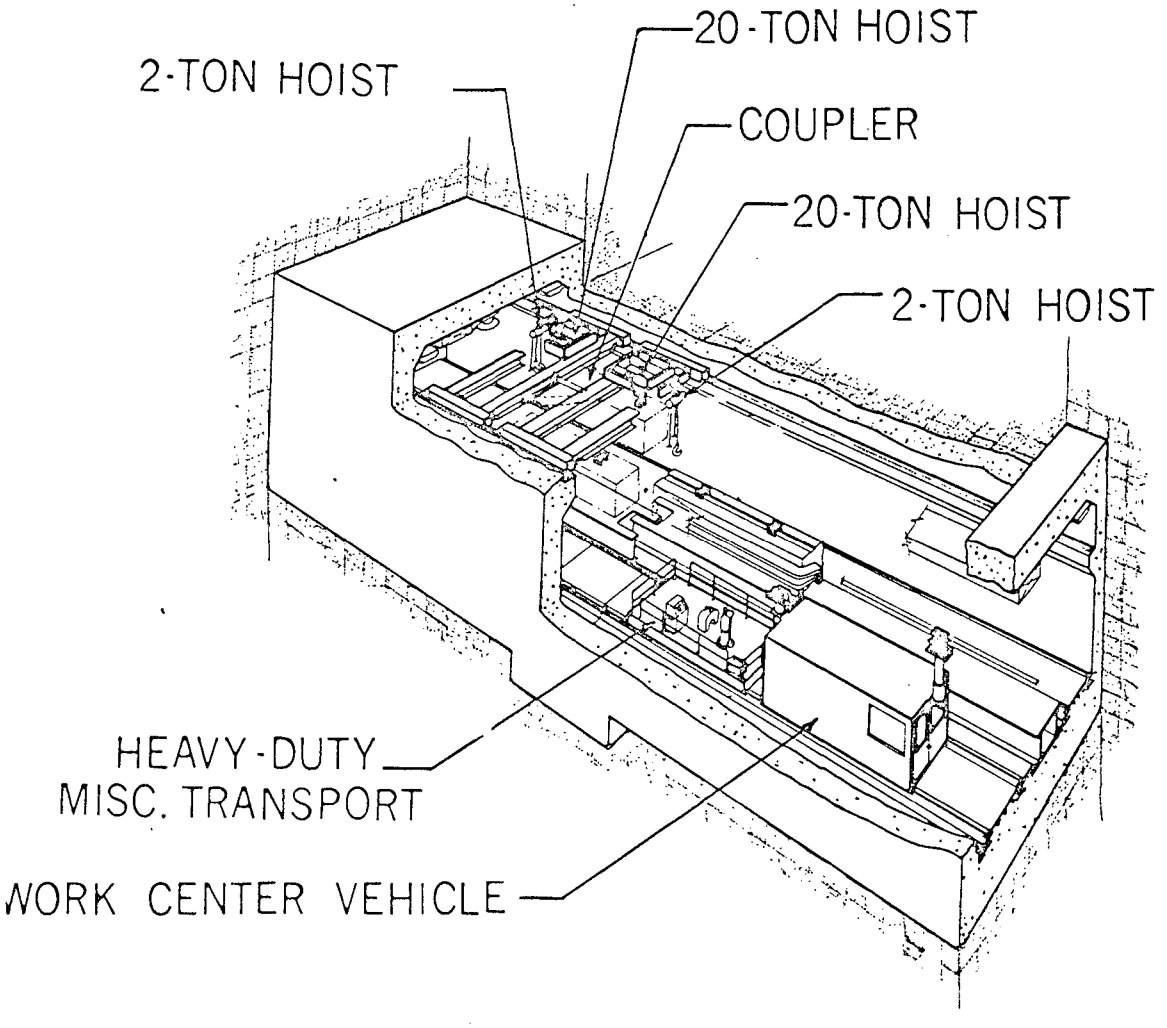

Fig. 11

MUB-6929-A

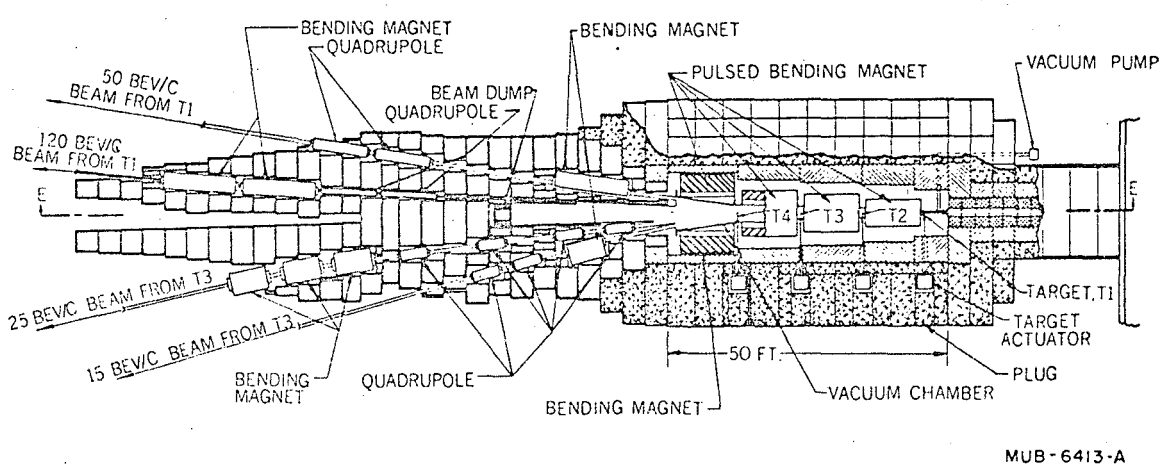
BENDING MAGNET
QUADRUPOLE
BENDING MAGNET
PULSED BENDING MAGNET
VACUUM PUMP
50 BEV/C BEAM FROM T1
BEAM DUMP
QUADRUPOLE
120 BEV/C BEAM FROM T1
T4
T3
T2
25 BEV/C BEAM FROM T3
15 BEV/C BEAM FROM T3
TARGET, T1
TARGET ACTUATOR
50 FT.
PLUG
BENDING MAGNET
QUADRUPOLE
BENDING MAGNET
VACUUM CHAMBER
MUB-6413-A

Fig. 12

This report was prepared as an account of Government sponsored work. Neither the United States, nor the Commission, nor any person acting on behalf of the Commission:

A. Makes any warranty or representation, expressed or implied, with respect to the accuracy, completeness, or usefulness of the information contained in this report, or that the use of any information, apparatus, method, or process disclosed in this report may not infringe privately owned rights; or

B. Assumes any liabilities with respect to the use of, or for damages resulting from the use of any information, apparatus, method, or process disclosed in this report.

As used in the above, "person acting on behalf of the Commission" includes any employee or contractor of the Commission, or employee of such contractor, to the extent that such employee or contractor of the Commission, or employee of such contractor prepares, disseminates, or provides access to, any information pursuant to his employment or contract with the Commission, or his employment with such contractor.