UCRL-16997

University of California

Ernest O. Lawrence Radiation Laboratory

OPERATION OF THE HOMOPOLAR GUN II COIL SYSTEM

TWO-WEEK LOAN COPY

This is a Library Circulating Copy which may be borrowed for two weeks. For a personal retention copy, call Tech. Info. Division, Ext. 5545

Berkeley, California

DISCLAIMER

This document was prepared as an account of work sponsored by the United States Government. While this document is believed to contain correct information, neither the United States Government nor any agency thereof, nor the Regents of the University of California, nor any of their employees, makes any warranty, express or implied, or assumes any legal responsibility for the accuracy, completeness, or usefulness of any information, apparatus, product, or process disclosed, or represents that its use would not infringe privately owned rights. Reference herein to any specific commercial product, process, or service by its trade name, trademark, manufacturer, or otherwise, does not necessarily constitute or imply its endorsement, recommendation, or favoring by the United States Government or any agency thereof, or the Regents of the University of California. The views and opinions of authors expressed herein do not necessarily state or reflect those of the United States Government or any agency thereof or the Regents of the University of California.

For Symposium on Engineering Problems
of Controlled Thermonuclear Research,
Gatlinburg, Tennessee, Oct. 3-6, 1966.

UCRL-16997
Preprint

UNIVERSITY OF CALIFORNIA

Lawrence Radiation Laboratory
Berkeley, California

AEC Contract No. W-7405-eng-48

OPERATION OF THE HOMOPOLAR GUN II COIL SYSTEM

Klaus Halbach and Donald B. Hopkins

September 27, 1966

OPERATION OF THE HOMOPOLAR GUN II COIL SYSTEM*

Klaus Halbach and Donald B. Hopkins

Lawrence Radiation Laboratory
University of California
Berkeley, California

September 27, 1966

ABSTRACT

The coil system of the Homopolar Gun II experiment is designed to allow production of grossly different field configurations by properly adjusting the relative position and currents of the coils. The currents in the individual coils are controlled by crow-barring all coils but one with ignitrons at appropriate times. The circumstances of the experiment require that the coils be in series and be energized by a single capacitor bank. This paper describes the system used to rapidly create a desired field distribution.

The adjustment of the many interacting parameters of the system can be reduced to the solution of linear algebraic equations. These are solved with the aid of an analog computer.

An operational amplifier manifold sums, integrates, and (or) inverts search-coil signals. A storage oscilloscope conveniently displays the deviation of the accomplished field distribution from the desired field distribution.

*Work done under the auspices of the U. S. Atomic Energy Commission.

I. INTRODUCTION

The Homopolar Gun II experiment[1] is shown in Fig. 1. Figure 2 shows a schematic diagram of the machine with a typical field distribution. From right to left, the five coils in the system are the South Mirror, Gradient, Uniform, North Mirror, and Guide. Briefly, the machine operation is as follows.

A burst of deuterium gas is released into a highly evacuated coaxial region at the peak of a magnetic-field pulse. This magnetic field is produced by coils which are electrically in series and are energized by an 80,000 μF 5-kV electrolytic capacitor bank.[2] After a short delay, a radial electric field is produced by the fast capacitor bank shown at the right end of the machine. A hot rotating plasma is created in the resulting crossed-field region on a magnetic-field gradient. The resulting plasma-field interactions accelerate the plasma down the bore of the system toward the left end. The radial electric field is removed, i.e., the fast capacitor bank is crowbarred, when the plasma is in the uniform field in region B. This stops the gross rotation of the plasma. Because of this sequence of generating and crowbarring, the plasma can penetrate the North mirror. Impurities that enter the plasma after crowbarring are reflected by the mirror.

It is of primary importance to the experiment that the linearity and degree of slope of the Gradient field (region A, Fig. 2) and the overall ratios of the fields be precisely adjustable and relatively easy to change. Examples of field distributions used in the experiment are:

1. A-region having linear slope at values between 0 and 15% over a 21-inch length;

2. A- and B-region fields identical and flat;

3. Both 1 and 2 above with and without the North Mirror peak at various overall ratios.

Different field distributions are, of course, obtainably only by controlling the individual coil positions and their currents. In practice, ignitrons are used to crowbar the field coils at appropriate adjustable times. This clamps their currents to the values required for the desired field distribution. (These currents actually decay with a finite L/R time constant which is longer than the half-period of 35 msec. This in turn is much longer than the duration of the plasma experiment.)

II. MONITORING LOOP DESCRIPTION

A pictorial representation of the field coils and their respective monitor loops is shown in Fig. 3. All coils except the Gradient have a single-turn loop whose integrated output voltage is proportional to the magnetic field at its location.

The Gradient loops deserve a fuller explanation. In this region is an assembly having two single loops and three double loops oriented as shown (Fig. 3). The lower left-hand drawing shows that a double loop is actually two loops in series, physically separated along their axis and oppositely wound. In a pulsed uniform field, when the two loops have equal areas, the double loop produces a null voltage. In a field gradient, the integrated voltage produced is ideally proportional to the difference in the fields at the two loop locations, with equal loop areas

assumed. Specifically, where A_1 and A_2 are the two loop areas in fields B_1 and B_2, respectively:

$$V \propto A_2B_2 - A_1B_1, \tag{1}$$

or

$$V \propto A(B_2 - B_1) \quad \text{for equal areas.} \tag{2}$$

For desired gradients of one percent:

$$\frac{B_2 - B_1}{B_2} \doteq 10^{-2}. \tag{3}$$

To minimize errors due to unequal areas, it is required that

$$\frac{A_2 - A_1}{A_2} \leqslant 10^{-3}. \tag{4}$$

Rather than devote much effort to achieving this rather stringent requirement, we used electronic compensation to cancel the effects due to slightly different loop areas.

III. ADJUSTING THE GRADIENT

The philosophy and method of adjusting the gradient slope will now be described, with reference to Fig. 4. Here, the South double and single loops are shown with their associated circuitry.

The full loop feeds two dividers having two potentiometers whose output can be varied as much as 1/2 and 5% of the input voltage. The inverter provides a necessary polarity inversion. The 1/2% adjustment is the permanent compensation adjustment which corrects for unequal double-loop areas, as just discussed. This is set once, for a given monitoring loop assembly, then remains unchanged. The remaining

Gradient Set Adjust potentiometer selects the desired gradient slope, e.g., it is set to maximum for a 5% slope per double-loop length.

Consider the case when the actual field slope existing in the double-loop region is equal to that selected by the Gradient Set potentiometer. The double-loop signal is then equal and opposite to the sum of the Compensation signal and the Gradient Set signal. Then the output of the summing integrator, called the South Differential Gradient signal, is zero. This is the condition sought in setting the gradient slope.

The other loops in the assembly provide Middle and North Differential Gradient signals in like manner, comparing double loop signals with a portion of a full loop signal. For a desired linear slope, all Gradient Set adjustments are set to the same value. Note that this slope adjustment, although independent of absolute field magnitudes, is dependent on the current distribution in all the coils.

IV. MONITORING THE FIELD RATIOS

When the field ratios are adjusted, a method similar to that described above is employed to monitor the field configuration. The loop signal from each coil location is compared with a reference signal and combined with it so as to produce a null output signal when the desired ratio is obtained. The Uniform field signal is the lowest in the system and was chosen as the reference signal to which all others are compared.

Figure 5 shows the circuitry whereby the various loop signals can either be monitored directly or compared to the Uniform signal for providing the null "Mixed" output signals.

V. ADJUSTMENT THEORY AND PROCEDURE

The five field coils are in series and have their currents controlled by shorting them with ignitrons. The changes in the time delay settings for these ignitron firing pulses and the coil positions are then the independent variables. The deviations from the desired ratios are the "measurables" or dependent variables.

It is obvious that there is complete interaction between all coil currents. When one coil is shorted before the current peak, the current peak, the current in all other coils must increase. In other words, a change in only one variable will affect all measurables. The system behavior from one choice of variables to the next is actually non-linear. However, when the first trial at a desired field configuration is set up, enough information can be obtained from the coil design data[3,4] and a set of uncrowbarred coil-current measurements to make an intelligent first approximation in the setting of the variables. An initial machine shot is taken as a reference, with these first settings. From this point on, linear treatment is used and is found to be adequate. Typically, only a few machine shots are required to produce a precise new field configuration. The procedure used iteratively makes linear changes to achieve a desired solution. This is just Newton's method[5] applied to many variables.

Such a system can then be approximately described by a set of linear algebraic equations as follows, where the Δb's are the measurables (field deviations) and the Δv's are the variables (time delay or position changes):

$$\begin{aligned} \Delta b_1 &= m_{11}\Delta v_1 + m_{12}\,\Delta v_2 + \cdots \\ \Delta b_2 &= m_{21}\Delta v_1 + m_{22}\,\Delta v_2 + \cdots \\ &\vdots \end{aligned} \quad . \tag{5}$$

In matrix form, this is

$$\begin{pmatrix} \Delta b_1 \\ \Delta b_2 \\ \vdots \end{pmatrix} = \begin{pmatrix} m_{11} & m_{12} & \cdots \\ m_{21} & m_{22} & \cdots \\ \vdots & & \end{pmatrix} \begin{pmatrix} \Delta v_1 \\ \Delta v_2 \\ \vdots \end{pmatrix} , \tag{6}$$

or simply

$$\Delta b_{desired} = M\,\Delta v_{required} \cdot \tag{7}$$

The matrix elements, m_{rk}, are unknown and could be measured as follows. We could take one machine shot in which only one variable, say Δv_1, was changed. Then we would have

$$\begin{pmatrix} \Delta b_1 \\ \Delta b_2 \\ \Delta b_3 \end{pmatrix} = \begin{pmatrix} m_{11} & m_{12} & m_{13} \\ m_{21} & m_{22} & m_{23} \\ m_{31} & m_{32} & m_{33} \end{pmatrix} \begin{pmatrix} \Delta v_1 \\ 0 \\ 0 \end{pmatrix} , \tag{8}$$

from which is obtained the first column of matrix elements:

$$m_{11} = \frac{\Delta b_1}{\Delta v_1} \; ; \; m_{21} = \frac{\Delta b_2}{\Delta v_1} \; ; \; m_{31} \frac{\Delta b_3}{\Delta v_1} \quad . \tag{9}$$

(We might conveniently normalize so that $\Delta v_1 = 1.0$. Then the m's are directly equal to the Δb's.) Taking two more machine shots, and changing only Δv_2 and Δv_3 in turn, would yield the values of the remaining matrix elements.

In practice, the matrix element values are of no interest in themselves and are therefore not obtained explicitly. Instead, with the example of three variables considered, three machine shots are taken as described above (changing only one variable at a time) and the results are tabulated in matrix form

$$\begin{pmatrix} \Delta b_{11} & \Delta b_{12} & \Delta b_{13} \\ \Delta b_{21} & \Delta b_{22} & \Delta b_{23} \\ \Delta b_{31} & \Delta b_{32} & \Delta b_{33} \end{pmatrix} = \begin{pmatrix} m_{11} & m_{12} & m_{13} \\ m_{21} & m_{22} & m_{23} \\ m_{31} & m_{32} & m_{33} \end{pmatrix} \begin{pmatrix} \Delta v_1 & 0 & 0 \\ 0 & \Delta v_2 & 0 \\ 0 & 0 & \Delta v_3 \end{pmatrix}, \quad (10)$$

or simply

$$\Delta B = M \, \Delta V, \quad (11)$$

where all matrices are square. The matrix ΔV is usually diagonal, for simplicity, but need not necessarily be so.[4]

Inversion of (11) gives

$$M^{-1} = \Delta V \cdot \Delta B^{-1} . \quad (12)$$

Similarly, inversion of (7) gives

$$\Delta v_{required} = M^{-1} \cdot \Delta b_{desired} . \quad (13)$$

Finally, substitution of (12) into (13) gives:

$$\boxed{\Delta v_{required} = \Delta V \quad \Delta B^{-1} \quad \Delta b_{desired} .} \quad (14)$$

Thus, all information necessary to compute the required change in variables is at hand. The values of the components of ΔV, ΔB, and $\Delta v_{desired}$ are entered into an analog computer which calculates the element values of the $\Delta v_{required}$. The desired field changes are obtained from the preceding shot. If the relationship between the variables and measurables were completely linear, the calculated corrections in the variables would accurately produce the desired field values. Since the system is non-linear, an iterative process is required.

VI. EXAMPLE: SETTING FIELD RATIOS WITHOUT SPECIFYING GRADIENT SLOPE

For a simplified illustration, we now consider the very first adjustment made with this procedure. Figures 6 and 7 show the waveforms obtained.

We wished to produce the following relative field magnitudes

South Mirror	40 kG
Gradient	30 kG
Uniform	20 kG
North Mirror	40 kG

without specifying any particular gradient slope or Guide field value. The South, Gradient, and North signals were monitored with the unintegrated Gradient signal included for general interest. The variables were the crowbar time delays for the South Mirror, Uniform, and North Mirror coils. The gradient coil was not crowbarred. (One coil must always be uncrowbarred in order to avoid completely shorting the capacitor bank energizing the coils.)

The matrix description of this sytem is

$$\begin{pmatrix} \Delta b_S \\ \Delta b_G \\ \Delta b_N \end{pmatrix} = \begin{pmatrix} M' \end{pmatrix} \begin{pmatrix} \Delta v_S \\ \Delta v_U \\ \Delta v_N \end{pmatrix} . \tag{15}$$

The coil design data gave the initial positions of the coils. In keeping with the desired field ratios, the adjustment potentiometers (shown in Fig. 5) were set to

South	0.5
Gradient	0.66
North	0.5

(The Uniform signal always has the relative value of 1.0.)

With these settings, the initial reference shot was taken [Fig. 6(A)] and the waveforms displayed directly, i.e., not compared to Uniform. From an examination of these waveforms, a first guess was made as to the required crowbar time delays for the three coils. The second shot [Fig. 6(B)] was taken with these delay settings with the waveforms now compared to Uniform (accomplished by putting the switches in Fig. 5 to the Compared position.) It can be seen that the waveforms do approach zero (their baselines) at the peak of the magnetic field, as required. In shots 3, 4, and 5 [Fig. 6(C), 6(D), and 7(A), one crowbar time delay at a time was changed. The resulting differences in fields were measured from the waveforms (in millimeters deflection, say) and the results were tabulated in the matrix form:

$$\begin{pmatrix} \Delta b_{S1} & \Delta b_{S2} & \Delta b_{S3} \\ \Delta b_{G1} & \Delta b_{G2} & \Delta b_{G3} \\ \Delta b_{N1} & \Delta b_{N2} & \Delta b_{N3} \end{pmatrix} = \begin{pmatrix} \\ M'' \\ \\ \end{pmatrix} \begin{pmatrix} \Delta v_S & 0 & \\ 0 & \Delta v_U & \\ 0 & 0 & \Delta v_N \end{pmatrix}. \quad (16)$$

Each column of the Δb matrix was normalized so that the largest element in each column was 1.0 and all diagonal elements were positive. (Multiplying all elements in corresponding columns of the Δb and Δv matrices by the same constant is permissible.)

The required field changes were measured from the first crowbarred waveforms [Fig. 6(B)] and tabulated. These values and those of the Δb and Δv matrices in (16) were entered into the computer, which

calculated the required changes in crowbar time delay settings. In order to ensure convergence of the iterative process, only one-half of the computer-recommended changes in variables was applied. These changes were made and the next shot taken [Fig. 7(B)]. It can be seen that the waveforms are nearly at zero at the peak of the field, as required.

One more iteration of the above procedure produced the final shot [Fig. 7(C)] that shows all waveforms precisely at zero at the desired time. The chosen field ratios were thus achieved with seven machine shots.

The remarkable accuracy of the adjustment is worth emphasizing. The oscilloscope trace width in the waveforms of the final shot is less than 0.5% of the total field magnitude. The accuracy of the adjustment is therefore seen to be better than 0.3%.

VII. OTHER CONFIGURATIONS

For proper machine operation, the linearity and degree of the gradient slope must also be adjusted (in addition to the field ratios). This adjustment was first done with a five-variable system whose matrix description was

$$\begin{pmatrix} \text{North Diff. Grad.} \\ \text{Middle Diff. Grad.} \\ \text{South Diff. Grad.} \\ \text{Gradient} \\ \text{North Mirror} \end{pmatrix} = \begin{pmatrix} M \end{pmatrix} \begin{pmatrix} \text{S. Mirror-Grad. Coil Separation} \\ \text{Short Grad. Coil Delay} \\ \text{South Mirror Delay} \\ \text{Uniform Delay} \\ \text{North Mirror Delay} \end{pmatrix} \tag{17}$$

(Δb) (Δv)

and that required five-by-five matrix manipulations (the limit of our computer). The procedure was exactly as that described in the preceding section.

Many combinations of measurables and variables are possible. In a later configuration, for example, we wanted to change the axial position of the linear gradient region. For this, only two field ratios had to be known precisely. In this case the adjustment involved only three variables: (a) South Mirror crowbar delay; (b) Short Gradient Coil crowbar delay; and (c) the axial position of the gradient monitoring loop assembly.

VIII. INSTRUMENTATION

As indicated in Figs. 4 and 5, several integrators and inverters are required for the field configuration adjustment. Some must be summing amplifiers. Additional long-time-constant integrators are required for a number of other signals such as those from magnetic pickup loops on the machine and Rogowski belts on the electrolytic bank and crowbar ignitron leads. As many as 20 different signals have needed integrating or inverting in the normal operation of the machine.

Oscilloscope operational amplifier plug-ins and lumped-constant integrators used originally proved unsatisfactory. When plug-ins were used as integrators, the in dc drift was excessive and frequent resetting was required. The lumped-constant integrators introduced appreciable errors in some measurements.

It was desirable to have consolidated instrumentation requiring little or no attention. A 30-channel stabilized operational amplifier manifold was developed in order to circumvent the cost of 30 chopper-stabilized amplifiers. The unit has 25 channels of summing integrators and 5 channels of summing inverters. Its novel feature is that it uses 30

of the most inexpensive solid-state operational amplifiers available. Three high-quality chopper-stabilized amplifiers are used, one for each ten of the other amplifiers, to provide time-shared stabilization. An electronic commutator, free-running at about a 200-Hz rate, connects the stabilizing amplifier to a given amplifier for about 2.5 msec every 50 msec. Over long periods of time, the amplifier outputs are stabilized to 0± 2 mV. Additionally, all amplifiers are gated--that is, all amplifiers normally have their feedback networks shorted out until a gate pulse is received. A 36-pole relay then unshorts these networks for the desired time, typically 70 msec. All integrators are thus automatically reset after each machine shot.

It is desirable to check the field-deviation waveforms and the machine firing time on each shot, to determine if these had the proper relationship and whether the shot was a "good one." Rather than waste a Polaroid camera frame for this "check," a storage oscilloscope is used and is very convenient. Thus only a visual check of the display after each machine shot is required. This can be made rapidly since one needs to check only that all waveforms go to zero at the time of machine firing. The waveforms also visually indicate any disorders in the electrolytic bank firing or the crowbar ignitrons.

IX. CROWBAR IGNITRONS

The crowbar ignitrons are called upon to pass currents of 2 to 10 kA for periods as long as 10 to 12 msec at voltages as high as 4.5 kV. Although the voltage and current requirements are easily met by most ignitrons, the required total charge passage is not. The small size-A

ignitrons, e.g., types 5550 and 7703, have a charge-passage capability of only 20 to 30 C. We chose a "Super-D"-size ignitron, the 1053A, and tested it extensively at 120 C in a 50-msec, 3.5-kV system. As it performed satisfactorily, we used it in the crowbar ignitron bank. No evidence of deterioration or ignitor wetting has yet been observed.

The ignitrons normally extinguish at the end of the crowbar period when their anode-to-cathode voltage reverses. It was anticipated that an ignitron might occasionally fail to extinguish and would conduct in the reverse direction. Several hundred coulombs could then conceivably pass through the tube with a high probability of damaging it. The arc would probably transfer to the wall, which in this tube separates the active region of the tube from the cooling water. A puncture there could release water which in turn could cause a steam-driven explosion.

The necessity of avoiding these troubles led to the development of special mechanical safety relief switches. The philosophy was to sense any reverse ignitron current and use the resulting magnetic forces to close a switch which would relieve (short-circuit) the ignitron. As developed, these switches are arranged so that proper forward ignitron current passes through a copper leaf adjacent to, but electrically insulated from, another identical leaf. This second leaf carries the "excess" current (total current minus coil current) in the same direction. The two leaves are pulled together during normal operation and initiate no action.

Should an ignitron fail to extinguish, the two leaves are forced to separate. One leaf is held immobile. The other is free to flex and has a steel or nickel block bolted to it that is one switch contact. It meets the other contact, which is a bolted copper block, located on a

pedestal which limits the excursion of the flexible leaf. The materials were intentionally selected to cause the contacts to weld together. The contact construction is such that they can be easily replaced. At typical currents, the contact is made in about 1 msec.

Only two "misfires" have occurred in the lifetime of the Homopolar Gun II. During these misfires, the switches operated properly and the ignitrons continued to fire properly thereafter. Some copper was sputtered around the switch contact area but was relatively easily removed.

Figure 8 shows the crowbar ignitron and safety switch bank. The taped welding-cable bundles that go through the floor-boards to feed the machine coils are also visible. Since this bank is relatively inaccessible, it would be desirable to have some means of knowing if a safety switch has closed. (Extensive damage to the switch could result if another shot were taken after it had closed.) To date, no switch-closure sensing is provided. Reliance is placed on observing the waveforms after each shot.

ACKNOWLEDGMENTS

We thank Vincent J. Honey for many helpful discussions concerning stabilized operational amplifiers and for construction of parts of the manifold. We are grateful to G. Donald Paxson for developing the ignitron safety switches, and to him and Alvin R. Bryant for construction of the ignitron and safety switch bank. Kenneth W. Ehlers aided in general machine operation during all phases of engineering development. Finally, we gratefully acknowledge the continuing support and constructive comments of William R. Baker.

REFERENCES

1. Klaus Halbach, Magnetic-Field Configuration for a New Homopolar Gun, Bull. Am. Phys. Soc. 11, 5888 (1966).

2. Donald B. Hopkins, Electrolytic Capacitor Banks, in Proceedings of 1965 Symposium on Engineering Problems of Controlled Thermonuclear Research, Lawrence Radiation Laboratory, Livermore, California, May 4-7, 1965 (Lawrence Radiation Laboratory Report 1966), UCRL-16263 (June 1965), Conf. 650512.

3. Klaus Halbach and Ronald F. Holsinger, A Method for Determining the Geometry and Current Configuration of a System of Cylindrically Symmetric Solenoid Coils from a Specified Magnetic Field Shape, in Proceedings of 1965 Symposium on Engineering Problems of Controlled Thermonuclear Research, Lawrence Radiation Laboratory, Livermore, California, May 4-7, 1965 (Lawrence Radiation Laboratory Report UCRL-16080 (July 1965), Conf. 650512.

4. Klaus Halbach, A Program for Inversion of System Analysis and Its Application to the Design of Magnets, Lawrence Radiation Laboratory Report UCRL-16958 (in preparation).

5. F. B. Hildebrand, Introduction to Numerical Analysis (McGraw-Hill Book Co., New York, 1956), pp. 43-45.

FIGURE CAPTIONS

Fig. 1. The Homopolar Gun II experiment.

Fig. 2. Machine schematic diagram and typical field distribution.

Fig. 3. Monitor loop locations.

Fig. 4. Gradient adjustment circuitry.

Fig. 5. Field ratio adjustment circuitry.

Fig. 6. Waveforms of sample field-ratio adjustment, shots 1-4.

Fig. 7. Waveforms of sample field-ratio adjustment, shots 5-7.

Fig. 8. Crowbar ignitrons and safety switch bank.

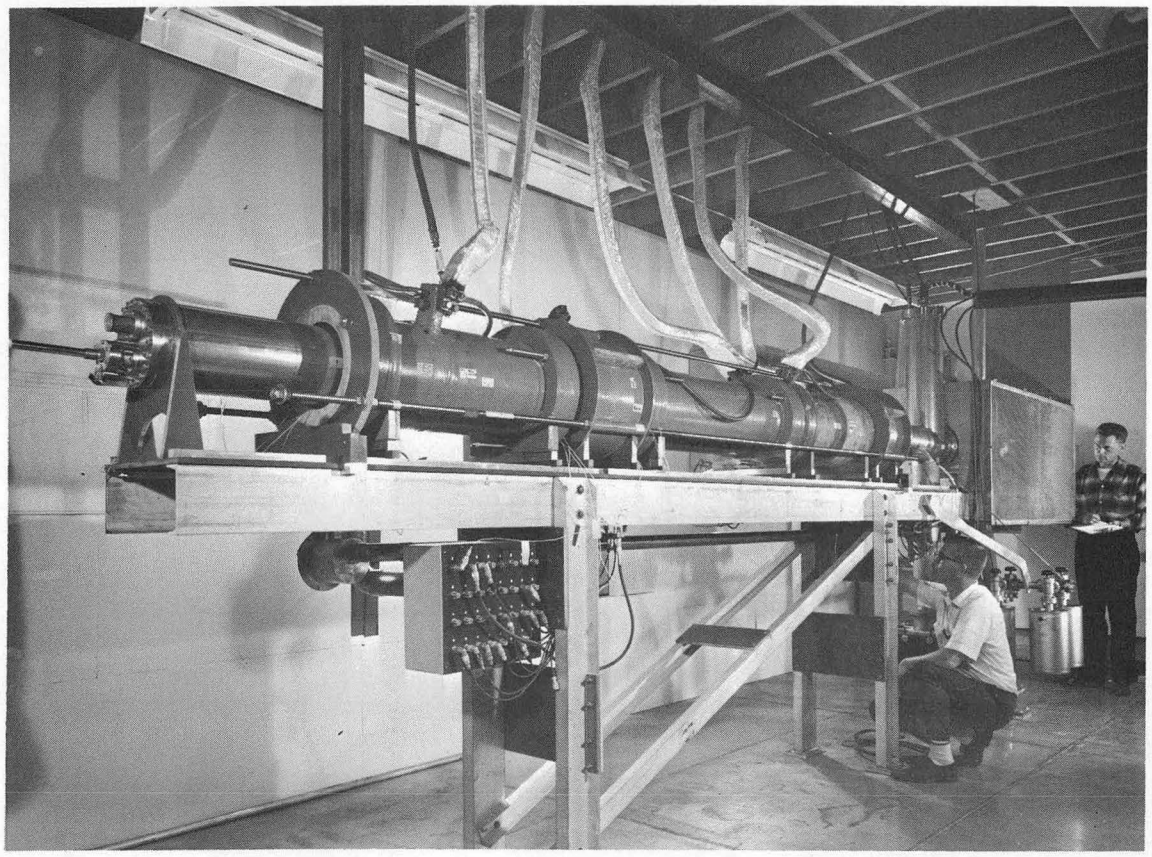

ZN-5850

Fig. 1

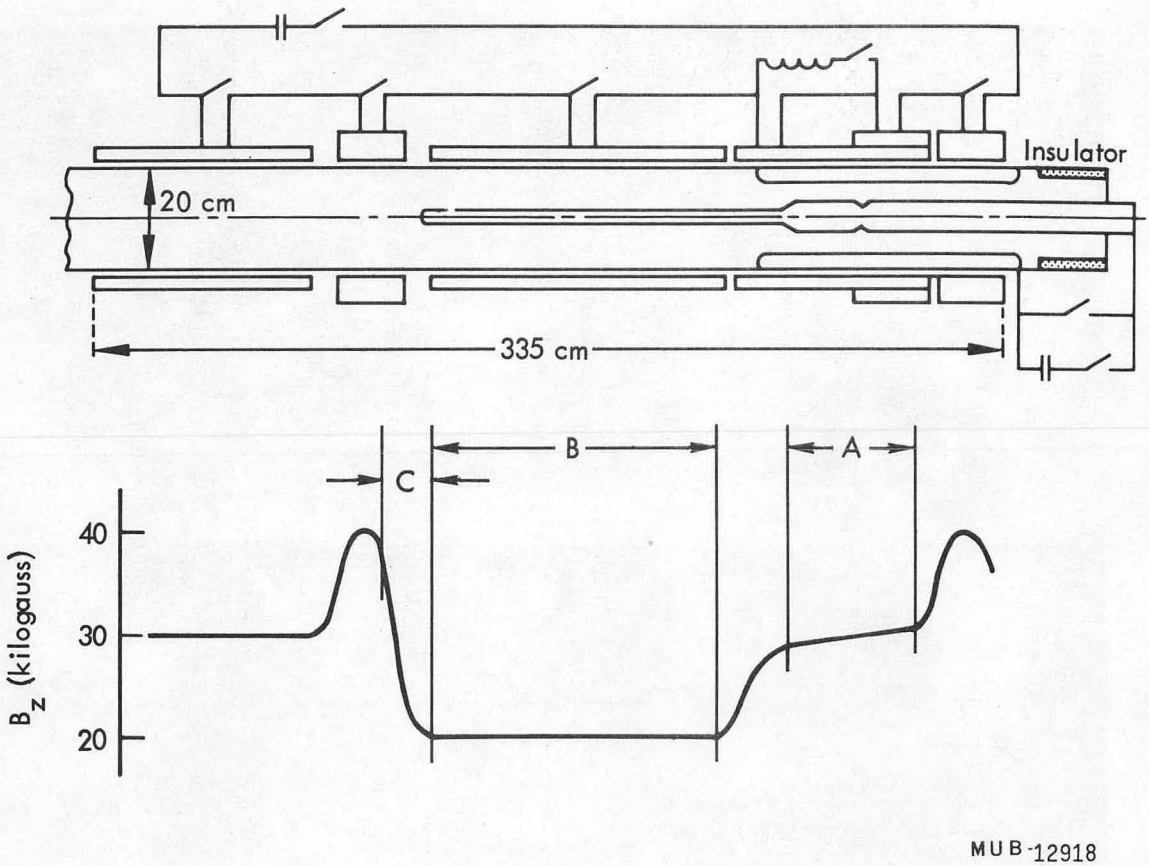

Fig. 2

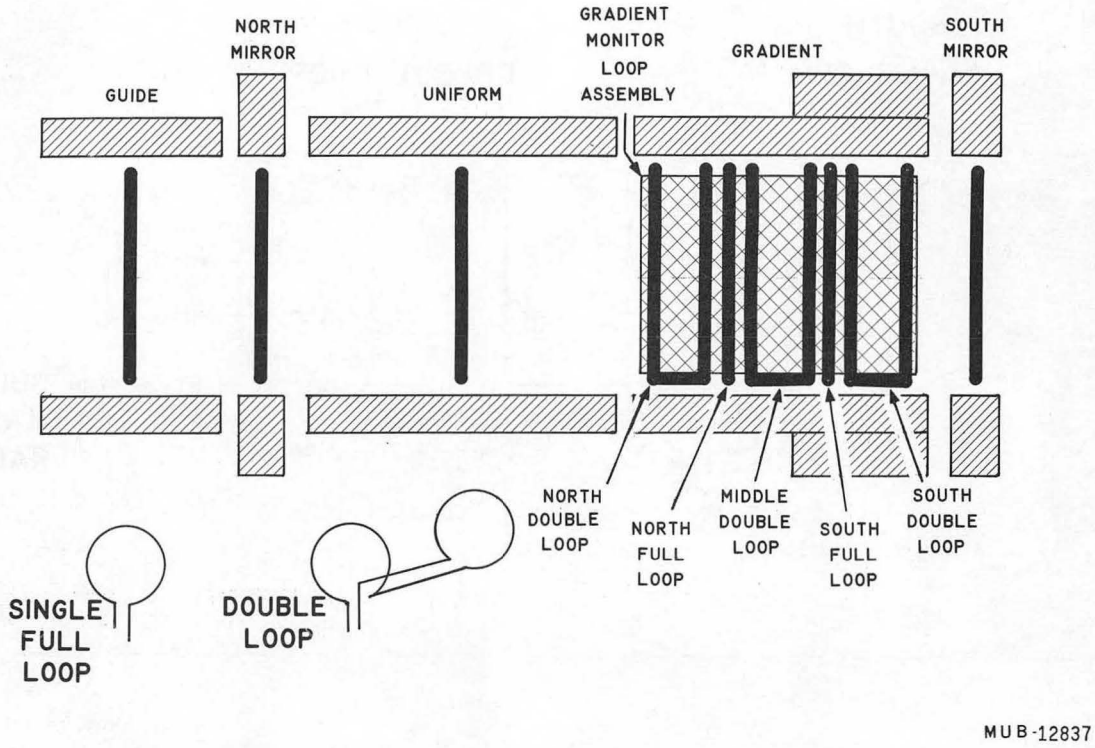
GUIDE
NORTH MIRROR
UNIFORM
GRADIENT MONITOR LOOP ASSEMBLY
GRADIENT
SOUTH MIRROR
NORTH DOUBLE LOOP
NORTH FULL LOOP
MIDDLE DOUBLE LOOP
SOUTH FULL LOOP
SOUTH DOUBLE LOOP
SINGLE FULL LOOP
DOUBLE LOOP
MUB-12837

Fig. 3

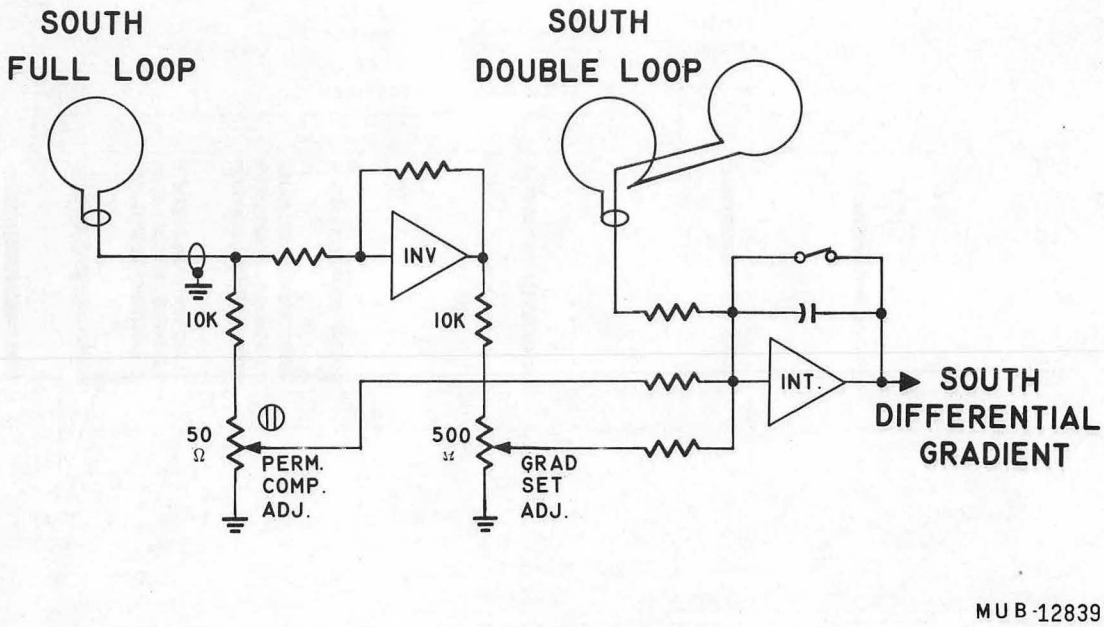
SOUTH
FULL LOOP
SOUTH
DOUBLE LOOP
INV
10K
10K
INT.
SOUTH
DIFFERENTIAL
GRADIENT
50
Ω
PERM.
COMP.
ADJ.
500
GRAD
SET
ADJ.
MUB-12839

Fig. 4

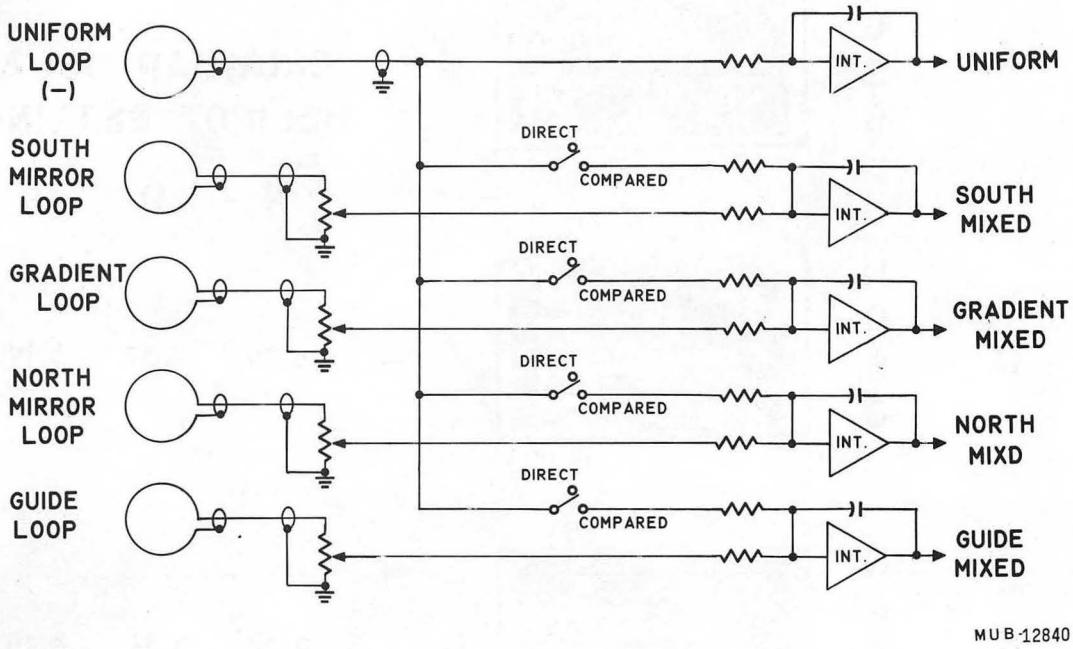
UNIFORM LOOP (−)
SOUTH MIRROR LOOP
GRADIENT LOOP
NORTH MIRROR LOOP
GUIDE LOOP
DIRECT
COMPARED
INT.
UNIFORM
SOUTH MIXED
GRADIENT MIXED
NORTH MIXD
GUIDE MIXED
MUB-12840

Fig. 5

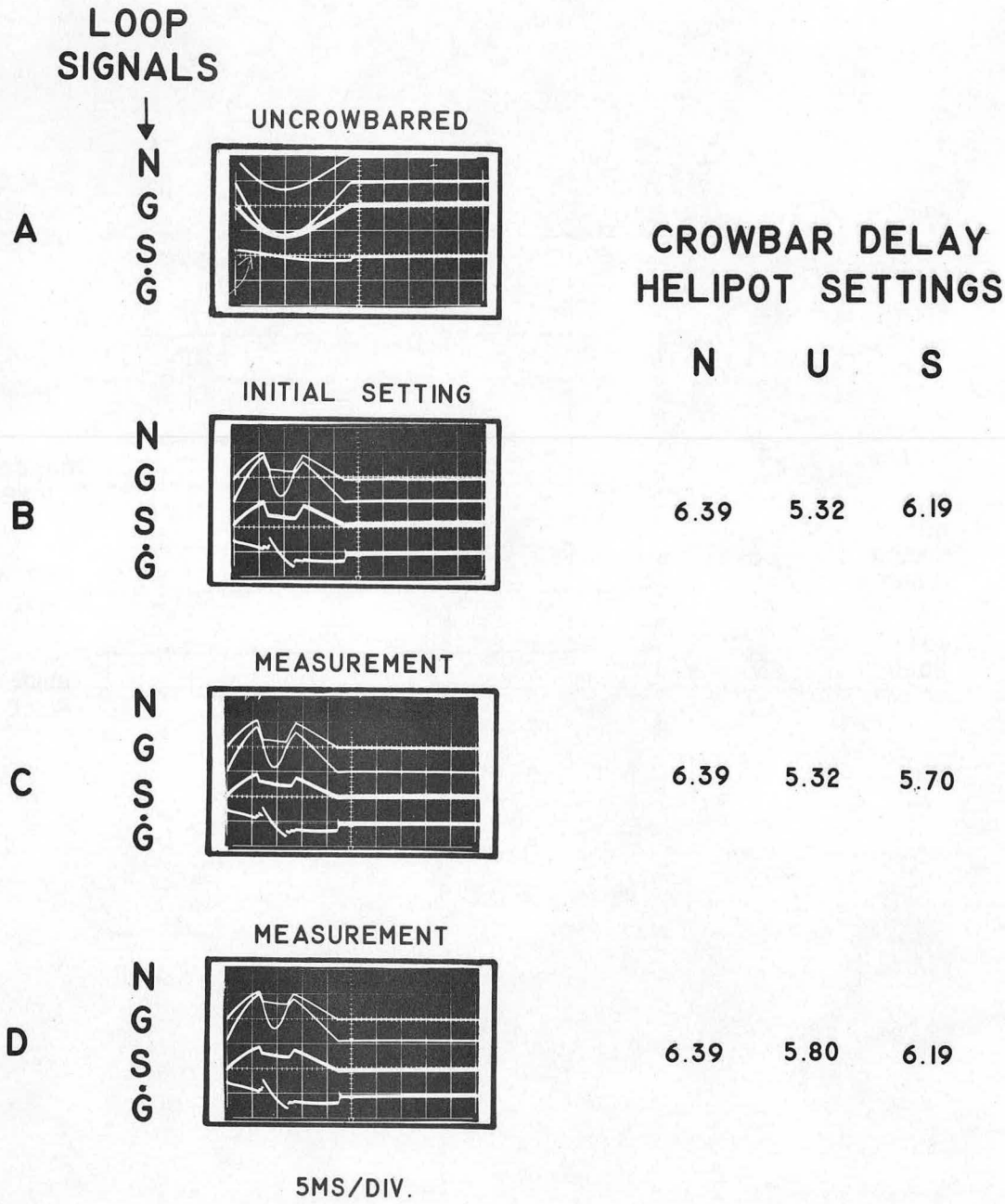
LOOP SIGNALS
N
G
S
Ġ
A
UNCROWBARRED
B
INITIAL SETTING
C
MEASUREMENT
D
MEASUREMENT
5MS/DIV.
CROWBAR DELAY HELIPOT SETTINGS
N U S
6.39 5.32 6.19
6.39 5.32 5.70
6.39 5.80 6.19
MUB-12836

Fig. 6

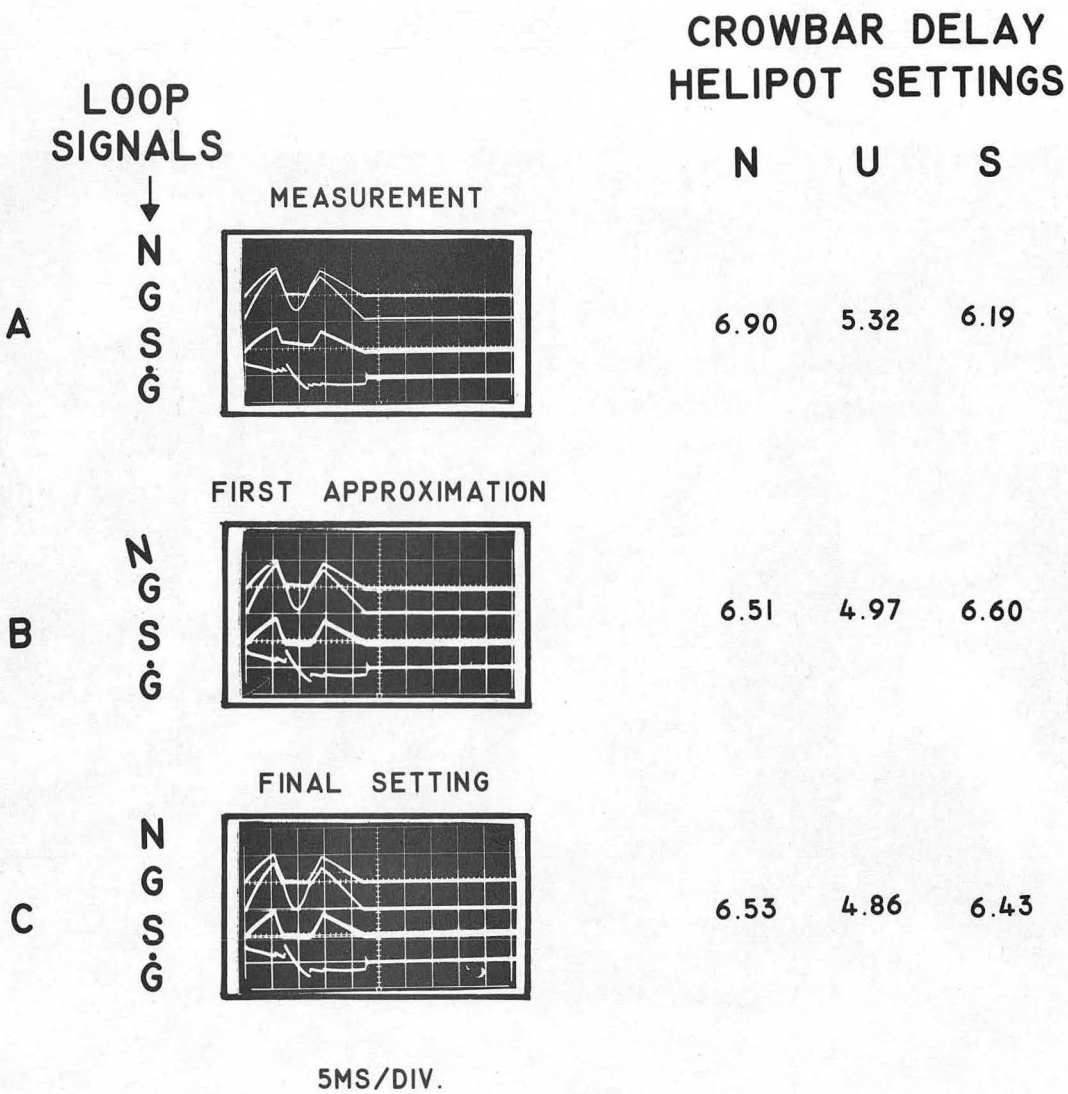

MUB-12838

Fig. 7

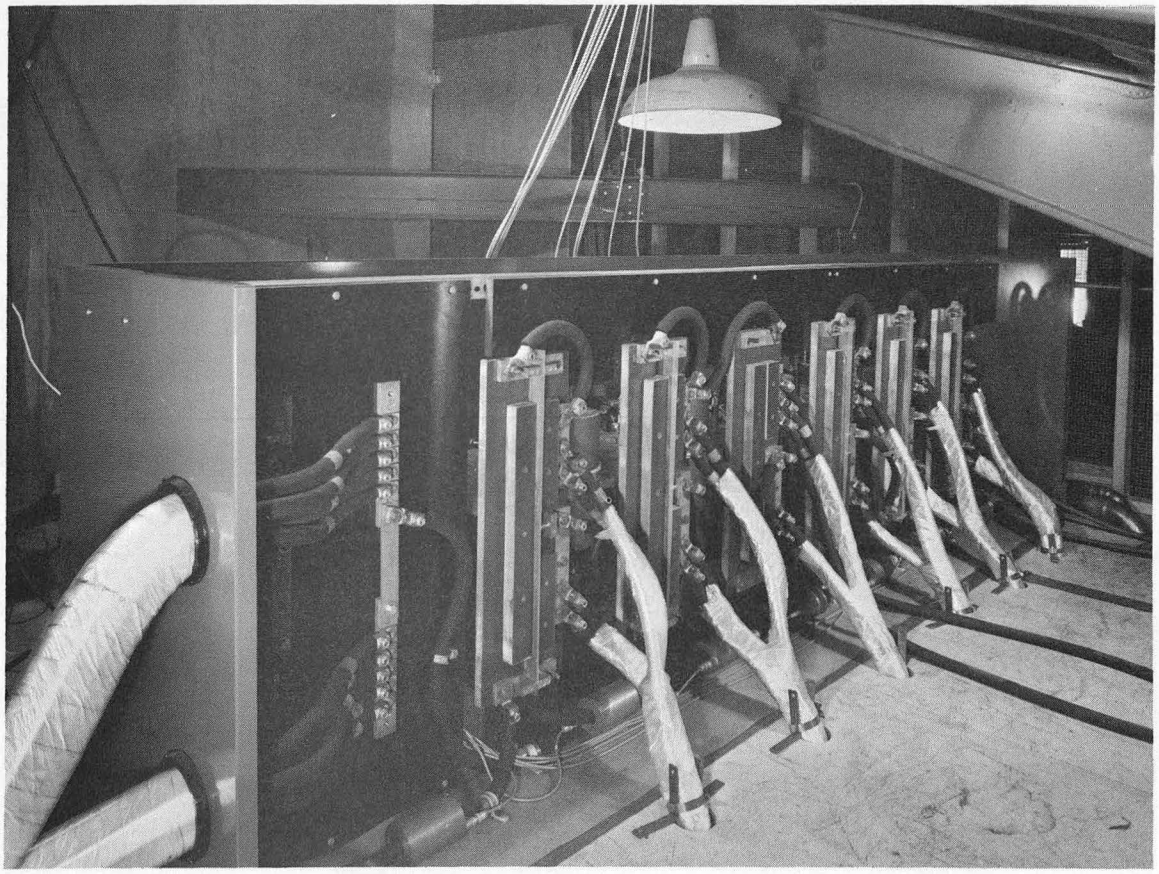

ZN-5851

Fig. 8

This report was prepared as an account of Government sponsored work. Neither the United States, nor the Commission, nor any person acting on behalf of the Commission:

A. Makes any warranty or representation, expressed or implied, with respect to the accuracy, completeness, or usefulness of the information contained in this report, or that the use of any information, apparatus, method, or process disclosed in this report may not infringe privately owned rights; or

B. Assumes any liabilities with respect to the use of, or for damages resulting from the use of any information, apparatus, method, or process disclosed in this report.

As used in the above, "person acting on behalf of the Commission" includes any employee or contractor of the Commission, or employee of such contractor, to the extent that such employee or contractor of the Commission, or employee of such contractor prepares, disseminates, or provides access to, any information pursuant to his employment or contract with the Commission, or his employment with such contractor.