Published in Journal of Chemical Physics 49, 5209 (1968)

UCRL-17085
~~Preprint~~

c. 2

RECEIVED
LAWRENCE
RADIATION LABORATORY

FEB 5 1970

LIBRARY AND
DOCUMENTS SECTION

THE ABSORPTION SPECTRUM OF SILVER ATOMS IN SOLID ARGON, KRYPTON, AND XENON

L. Brewer, B. A. King, J. L. Wang, B. Meyer, and G. F. Moore

June 1968

AEC Contract No. W-7405-eng-48

TWO-WEEK LOAN COPY

This is a Library Circulating Copy which may be borrowed for two weeks. For a personal retention copy, call Tech. Info. Division, Ext. 5545

UCRL-17085

LAWRENCE RADIATION LABORATORY
UNIVERSITY of CALIFORNIA BERKELEY

DISCLAIMER

This document was prepared as an account of work sponsored by the United States Government. While this document is believed to contain correct information, neither the United States Government nor any agency thereof, nor the Regents of the University of California, nor any of their employees, makes any warranty, express or implied, or assumes any legal responsibility for the accuracy, completeness, or usefulness of any information, apparatus, product, or process disclosed, or represents that its use would not infringe privately owned rights. Reference herein to any specific commercial product, process, or service by its trade name, trademark, manufacturer, or otherwise, does not necessarily constitute or imply its endorsement, recommendation, or favoring by the United States Government or any agency thereof, or the Regents of the University of California. The views and opinions of authors expressed herein do not necessarily state or reflect those of the United States Government or any agency thereof or the Regents of the University of California.

THE ABSORPTION SPECTRUM OF SILVER ATOMS IN SOLID ARGON, KRYPTON, AND XENON

L. Brewer, B. A. King, J. L. Wang, B. Meyer,† and G. F. Moore‡
Inorganic Materials Research Division, Lawrence Radiation Laboratory,
and Department of Chemistry,
University of California, Berkeley, California

ABSTRACT

The U.V. absorption spectrum of trapped silver atoms has been studied in Ar, Kr, and Xe matrices at 20°K and above. With respect to the gas phase, transitions corresponding to $^2P \leftarrow {}^2S$ were observed to be shifted to the blue by an amount characteristic of the particular matrix. In each matrix four absorption bands were observed with half-widths ranging from 170 cm^{-1} to 300 cm^{-1}. With increasing temperature the absorption maxima exhibit further shifts together with increasing half-widths. For Xe and Kr these changes were found to be reversible between 20°K and 1/3 of the melting point of the matrix.

---

† Permanent address: Chemistry Department, University of Washington, Seattle, Washington

‡ Present address: Bell Telephone Laboratories, Murray Hill, N. J.

INTRODUCTION

Matrix trapping is now widely used as a routine tool for the identification of unstable species. However, only comparatively few spectra of simple systems, such as atoms trapped in solid rare gases, have been reported. Such spectra can be correlated to the gas phase transitions, but their appearance is complicated by line broadening, fine structure, and spectral shifts, and these effects are not even qualitatively understood.[1-5] The following factors may complicate interpretation: (1) The matrix spectra may be intrinsically complex, due to overlap of broadened, shifted, and split lines. (2) Known or inadvertently present impurities may cause additional absorption features. (3) Atoms may dimerize or react chemically in the gas phase, during deposition, or during storage, with container or matrix gas impurities. (4) Time and temperature dependent diffusion may occur even if the matrix temperature is carefully controlled.

Silver atoms are chemically relatively inert, can be produced in a comparatively clean and simple system, and the resonance transitions are well known, lying between 3000 and 3500A in a spectroscopically convenient region. Therefore, the silver atom-rare gas system constitutes a very practical combination for matrix studies.

The only previously reported studies have been for silver ions. In the spectral range 1800Å - 2800Å Ag^+ doped alkali halide crystals show several absorption bands at lower energies than the fundamental absorption edge of the pure crystals.[6] They are assigned to forbidden D ← S transitions which Seitz suggests become partially allowed because the lattice vibrations cause a crystalline Stark effect.[7] Recently Brown

and Dainton studied silver ions in sulphuric acid glasses at 77°K and transitions in the 3000Å region showed blue shifts when warmed.[8]

EXPERIMENTAL

The metal cryostat using liquid hydrogen as refrigerant was described in an earlier publication.[2] Silver was heated in a carbon resistance furnace consisting of a 1.27 cm long carbon tube, external diameter 6.4 mm and internal diameter 3.2 mm, internally threaded at both ends and screwed onto fitting 3.2 mm diameter carbon rod electrodes. These electrodes were clamped inside water-cooled copper jaws. When operated at 6V and 60A the furnace reached a temperature of about 850°C. The furnace, mounted 5 cm from the sapphire target, had a radially cut effusion hole, 1.02 mm diameter, and was shielded by tantalum foil with a 6.4mm×9.55mm aperture. In a typical experiment the silver vapor pressure was computed to be 3×10^{-4} torr from the furnace temperature of 840°C to 880°C as measured with an optical pyrometer. The experimental arrangement is shown in Fig. 1.

The matrix gas flow was controlled by an independent inlet system and the quantity of condensed gas was estimated from the geometry of the system and the calibrated leakage rate.[2] During deposition the cryostat pressure, measured at a point 7.6 cm above the target, was always less than 8×10^{-6} torr. The estimated value of M/R (moles of matrix/moles of radical) was typically of the order of 1,000.

The silver (99.95%, Englehard Industries, Inc.) and Linde high purity rare gases were used without further purification. In a typical experiment about 0.4mM (millimoles) of matrix were deposited at a rate

of about 0.2mM/hr. With liquid hydrogen in the cryostat the pressure before deposition was less than 5×10^{-6} torr and during deposition rose to 8×10^{-6} torr.

For warm-up experiments the liquid hydrogen was allowed to evaporate and successive spectra were photographed continuously as the matrix warmed up. Up to 50°K the target temperature increased at approximately 10°K/min. In some experiments the matrix warm-up was quenched by the reintroduction of liquid hydrogen.[2]

Spectra were photographed in the region 2400Å to 4000Å using a Jarell-Ash f/6.3 Czerny-Turner spectrograph with a 2160 lines/mm grating blazed for 3000Å giving a first order dispersion of 5Å/mm.

RESULTS

General

In the gas phase the resonance lines of silver occur at 3280.7Å (30,473 cm^{-1}) for the $^2P_{3/2} \leftarrow {}^2S_{1/2}$ transition, and 3380.9Å (29,552 cm^{-1}), for the $^2P_{1/2} \leftarrow {}^2S_{1/2}$ transition. In each of the three matrices studied at 20°K four absorption lines appeared at shorter wavelengths than the gas wavelengths. The smallest shifts were observed in xenon and the largest in argon with xenon and krypton showing the most clearly resolved spectra. Changes of a factor of five in the M/R ratio did not affect the spectra. Table I lists the wave-numbers of the absorption maxima observed for the three matrices. Typical microphotometer tracings of spectra obtained from what we believe are well-isolated silver atoms are shown in Fig. 2. During warm-up experiments some bands exhibited further shifts with res ect to the gas phase transitions which were, within the experimental accuracy, linear functions of temperature.

Xenon

The absorption spectra of well-isolated silver atoms at 20°K showed three distinct but partially overlapping regions of comparable intensity. The central region, with a total half-width of about 400 cm^{-1}, consisted of a doublet, the longer wavelength portion accounting for approximately two-thirds of the total half-width. The half-width of each of the outer maxima was about 180 cm^{-1}.

The effect of warming the matrix is shown in Figs. 3 and 4. The following points were observed: (1) The position of the short wavelength component of the central doublet remained constant and its intensity relative to the other bands decreased considerably. (2) The long wavelength component of the doublet shifted towards longer wavelengths at ~14 $cm^{-1}/°K$. (3) The long wavelength band also shifted to longer wavelengths at approximately 24 $cm^{-1}/°K$. (4) The short wavelength component shifted to shorter wavelengths at ~11 $cm^{-1}/°K$. (5) At 35°K the half-width was about twice that at 20°K. (6) When the matrix was warmed to ~45°K and then rapidly quenched to 20°K the original structure and bandwidth were obtained.

Krypton

For krypton the absorption spectrum of well-isolated silver atoms showed three distinct bands of similar intensities with half-widths of about 170 cm^{-1}. These were similar to those observed with xenon but there was no central doublet. However, another weak band was observed at shorter wavelengths.

Spectra obtained as the matrix warmed up are shown in Fig. 5. Up to 40°K none of the three strong bands showed any significant shift.

A new band appeared at longer wavelengths and between 40°K and 50°K this energy band showed a blue shift of ~23 cm^{-1}. (In some krypton matrices another weak band appeared at 25,541 cm^{-1} and remained constant when the temperature changed.) At 50°K the half-width was nearly twice that at 20°K. On rapidly quenching a matrix warmed to 50°K the original structure and bandwidth were again recovered.

Argon

The absorption spectrum of silver atoms in argon showed three distinct absorptions of comparable intensity with another weaker band at longer wavelengths. The half-widths were approximately 300 cm^{-1}. During warm-up experiments the high energy band showed a small blue shift of ~3 $cm^{-1}/°K$ and the other bands showed red shifts of similar magnitudes. In all cases the half-widths had doubled at about 40°K and above 45°K the bands disappeared. Once a warm-up experiment was started it was difficult to quench argon matrices before the absorption bands disappeared and reversible temperature effects were not observed with these matrices. Spectra obtained as the matrix warmed up are shown in Fig. 6.

DISCUSSION

In each of the three matrices four absorption features were observed. Since these bands occurred only when the matrices were left below the estimated diffusion temperature,[9,10] it might be assumed that the spectra are due to isolated silver atoms and their interaction with the host lattice. If it is assumed that the four features are due to doublet splitting of each of the gaseous spectral lines, the assignment

of the features depends upon one of two possible assumptions: (a) the splitting is small, or (b) the splitting is comparable to or greater than the $^2P_{3/2}$ - $^2P_{1/2}$ energy difference. The energy shifts with respect t the gaseous spectrum are listed in Table I and the splittings are shown in Table II. From studies of the parameters listed in Tables I and II no clear pattern emerges. On the assumption of either small or large splitting the splitting is always greater for the $^2P_{1/2}$ level than for the $^2P_{3/2}$ level. For the large splitting case, there is a consistent increase of splittings from Xe to Kr to Ar. Also on this basis the blue shifts from the gas phase transitions increase from Xe to Kr to Ar (with the exception of the two of the lines in Ar). These blue shifts follow the trends observed with other atomic species in rare gas matrices where in general the argon matrix shows the largest blue shift and xenon, the most polarizable matrix, shows the smallest.[1,2,5,11] In the gas phase the $^2P_{3/2} \leftarrow {}^2S_{1/2}$ transition is stronger than the $^2P_{1/2} \leftarrow {}^2S_{1/2}$ transition; however it is not clear how these different intensities are reflected in the matrices.

The reason for the splitting of the expected two absorption bands into the observed four bands is not known. It may be due to the removal of the orbital degeneracy of the P states of the trapped atoms as suggested for magnesium atoms in argon matrices.[12] Distorted impurity sites with more than one adjacent vacancy would have to be considered to explain the experimental observations. So far no information is available about the silver atomic sites. Different lattice sites have been quoted in studies of alkali atoms.[3] For mercury in inert gas

matrices[2] it was believed that multiple sites were not responsible for the splitting of the triplet state ($^3P_1$). The large multiplet splitting in the gas for the ^2P state of gold provides a less ambiguous correlation between the matrix and gas spectra. Preliminary work on Au isolated in Kr shows a single feature at 2612A (2675A in gas) and a doublet at 2333 and 2360A (2427A in gas) which suggests that the matrix provides a weak electric field which can split a $^2P_{3/2}$ state but which can only shift a $^2S_{1/2}$ or $^2P_{1/2}$ state. This behavior can be reconciled with the silver observations if the relatively weak components for Ag in Kr and Ar at 3004 and 3233A, respectively, are attributed to Ag_2 on the basis of their observation only with relatively large concentrations of Ag. This explanation would not be applicable to xenon matrices where one would have to assume that the field is large enough to split further degenerate terms. The limited amount of experimental data presently available indicates that experimental conditions of deposition can greatly influence matrix spectra.[3,11]

Shift theories for mercury atoms in argon, krypton and xenon matrices were based on a Lennard-Jones potential between the trapped mercury atom and the rare gas atoms, but this model breaks down for neon matrices.[1] To explain the observed shifts with alkali atoms in inert gas matrices, atomic sites were compared with F-centers in alkali-halide crystals.[11] However, there is insufficient data available at the moment to see if either of these techniques can also be applied to silver atoms in matrices.

During warm-up of the matrices both blue and red shifts were observed for the absorption maxima together with increases in bandwidth.

Similar red shifts have been observed for copper, gold and mercury in matrices and the reversibility range (20°K to about 50°K) is also comparable.[2,13] The observation of simultaneous red and blue shifts with temperature as observed for argon and xenon constitute a new factor to be considered in matrix work; these temperature shifts are probably due to lattice expansion (~1% over the temperature range studied[14]) and changes in the rigidity of the matrix.[3] Some absorption maxima did not show any temperature shift and this suggests strong interaction between silver atoms and either the matrix or other silver atoms.

The reversibility of line position during annealing suggests that at 20°K silver exists in only one site, namely the most stable. Thus silver differs from Na, K, and Rb, where irreversible loss of a set of lines during annealing[3] and other effects proved the presence of multiple sites. An F-center model[11] which predicts an increase in bandwidth with increasing temperature together with a red shift for impurity absorption lines[15] might possibly be applied here. The present results do not resolve the question of the origin of the observed silver features. It is hoped that additional work with copper and gold and with mixtures of all three metal atoms in a variety of matrices will distinguish solute-solute interaction from multiple site effects. If a clear understanding of the atomic spectra in matrices can be obtained, it will be possible to deal with molecular spectra more confidently.

ACKNOWLEDGEMENT

This work was performed under the auspices of the United States Atomic Commission.

Table I. Silver absorption lines

Matrix	Absorption maxima at 20°K cm^{-1}	Comparison with gas-phase spectra: Shift assuming small splitting $^2P_{1/2}$	Shift assuming small splitting $^2P_{3/2}$	Shift assuming large splitting $^2P_{1/2}$	Shift assuming large splitting $^2P_{3/2}$
Xenon	29,710	158		158	
	30,423	871			-50
	30,595		122	1043	
	30,925		452		452
Krypton	30,881	1329		1329	
	31,857	2305			1384
	32,334		1861	2782	
	33,286		2813		2813
Argon	30,930	1378		1378	
	31,732	2180			1259
	32,929		2456	3377	
	33,522		3049		3049

Table II. Energy splitting of silver absorption lines in cm^{-1}.

Gas Phase Transition[a]		Small Splitting Assumption			Small Splitting Assumption		
		Xe	Kr	Ar	Xe	Kr	Ar
29,552	$^2P_{1/2}$	713	976	802	885	1,453	1,999
30,473	$^2P_{3/2}$	330	952	593	502	1,429	1,790

[a] Gas phase separation $^2P_{3/2}$ - $^2P_{1/2}$ is 921 cm^{-1}.

REFERENCES

1. M. McCarty and G. W. Robinson, Mol. Phys. 2, 415 (1959).

2. L. Brewer, B. Meyer and G. D. Brabson, J. Chem. Phys. 43, 3973 (1965).

3. B. Meyer, J. Chem. Phys. 43, 2986 (1965).

4. W. W. Duley, Proc. Phys. Soc. 92, 830 (1967).

5. L. Andrews and G. C. Pimentel, J. Chem. Phys. 47, 2905 (1967).

6. K. Fussanger, W. Martienssen and H. Bilz, Phys. Stat. Sol. 12, 383 (1965).

7. F. Seitz, Rev. Mod. Phys. 23, 238 (1951).

8. D. M. Brown and F. S. Dainton, Trans. Faraday.Soc. 62, 1139 (1966).

9. Small impurities diffuse rapidly and cannot be preserved for periods of many minutes if the temperature is allowed to rise to ~0.5 times the melting point of the pure matrix material, see "Radical Formation and Trapping in the Solid Phase," by G. C. Pimentel, ref. 10.

10. Formation and Trapping of Free Radicals, A. M. Bass and H. P. Broida, editors (Academic Press Inc., New York, 1960).

11. W. Weyhmann and F. M. Pipkin, Phys. Rev. 137, A490 (1965); S. L. Kupferman and F. M. Pipkin, Phys. Rev. 166, 207 (1968).

12. M. Brith and O. Schnepp, J. Chem. Phys. 39, 2714 (1963).

13. Private communication, B. Meyer.

14. G. L. Pollack, Solid State of Rare Gases, Rev. Mod. Phys. 36, 748 (1964).

15. C. C. Klick and J. H. Schulman, Solid State Physics 5, 97 (1957).

Fig. 1 Arrangement for carbon resistance furnace, scale approximately 1:1

A - Vacuum chamber wall

B - Flange

C - Kovar-ceramic seal for water-cooled electrodes

D - Copper electrodes

E - Radiation shield

F - Carbon resistance furnace

G - Effusion hole

H - Sapphire target maintained at 20°K

I - Vacuum "O" Ring

Fig. 2 Absorption spectrum of well-isolated silver atoms in rare gas matrices at 20°K. The sharp lines appearing in the spectra are mercury emission lines from the xenon arc.

Fig. 3 Effect of temperature on the absorption spectrum of silver in xenon.

Fig. 4 This photograph shows clearly the effect of increasing temperature on the absorption spectrum of silver in xenon. The bottom exposure was taken at 20°K. The band on the left occurs at ~ 3,400Å, the band on the right at ~ 3,200Å. For publication the photograph contrast was increased.

Fig. 5 Effect of temperature on the absorption spectrum of silver in krypton. At temperatures above 20°K a weak emission line from the xenon arc produces the apparent splitting of the long wavelength band.

Fig. 6 Effect of temperature on the absorption spectrum of silver in argon. At temperatures above 20°K a weak emission line from the xenon arc produces the apparent splitting of the long wavelength band.

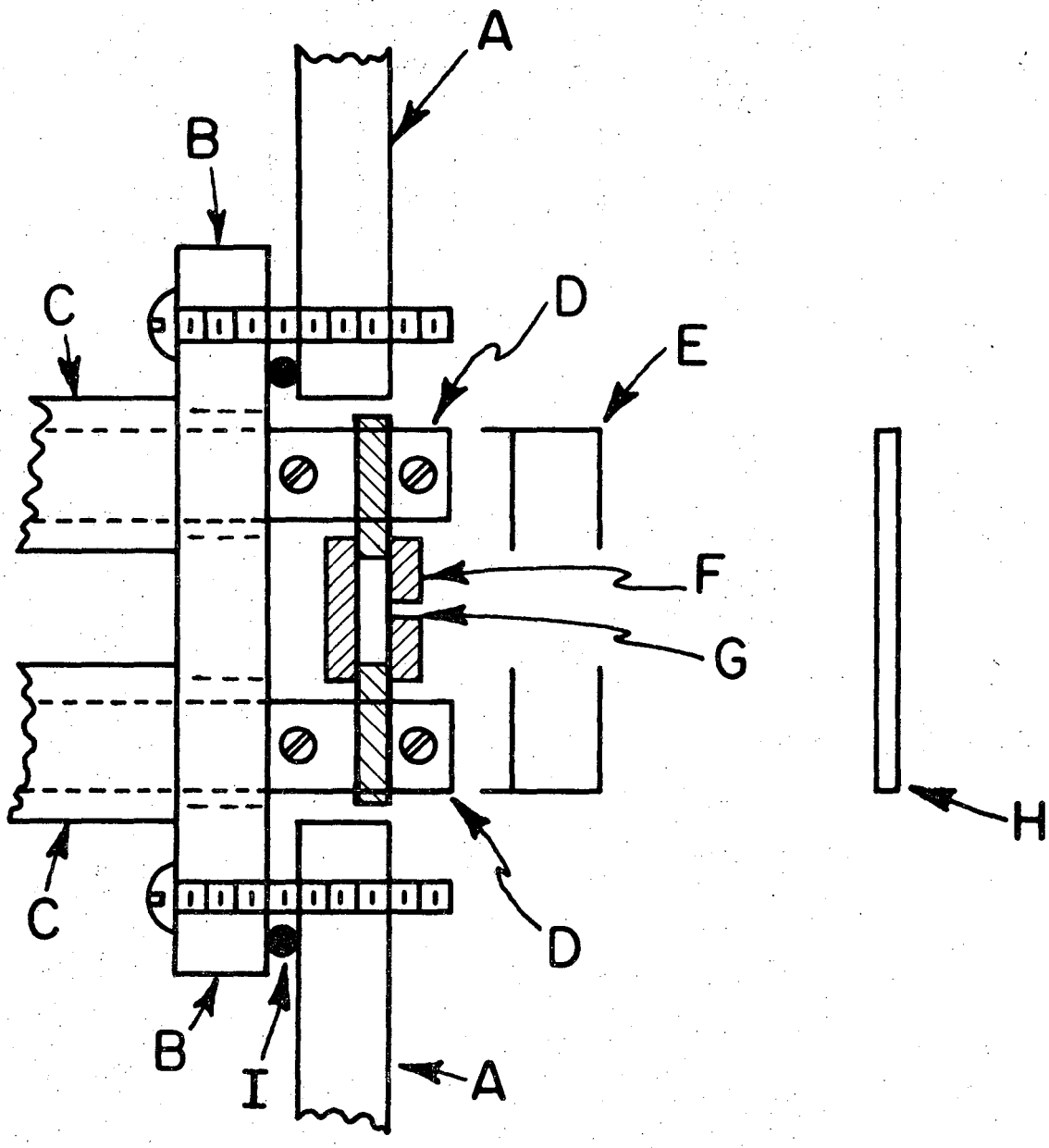

MUB 14137

Fig. 1

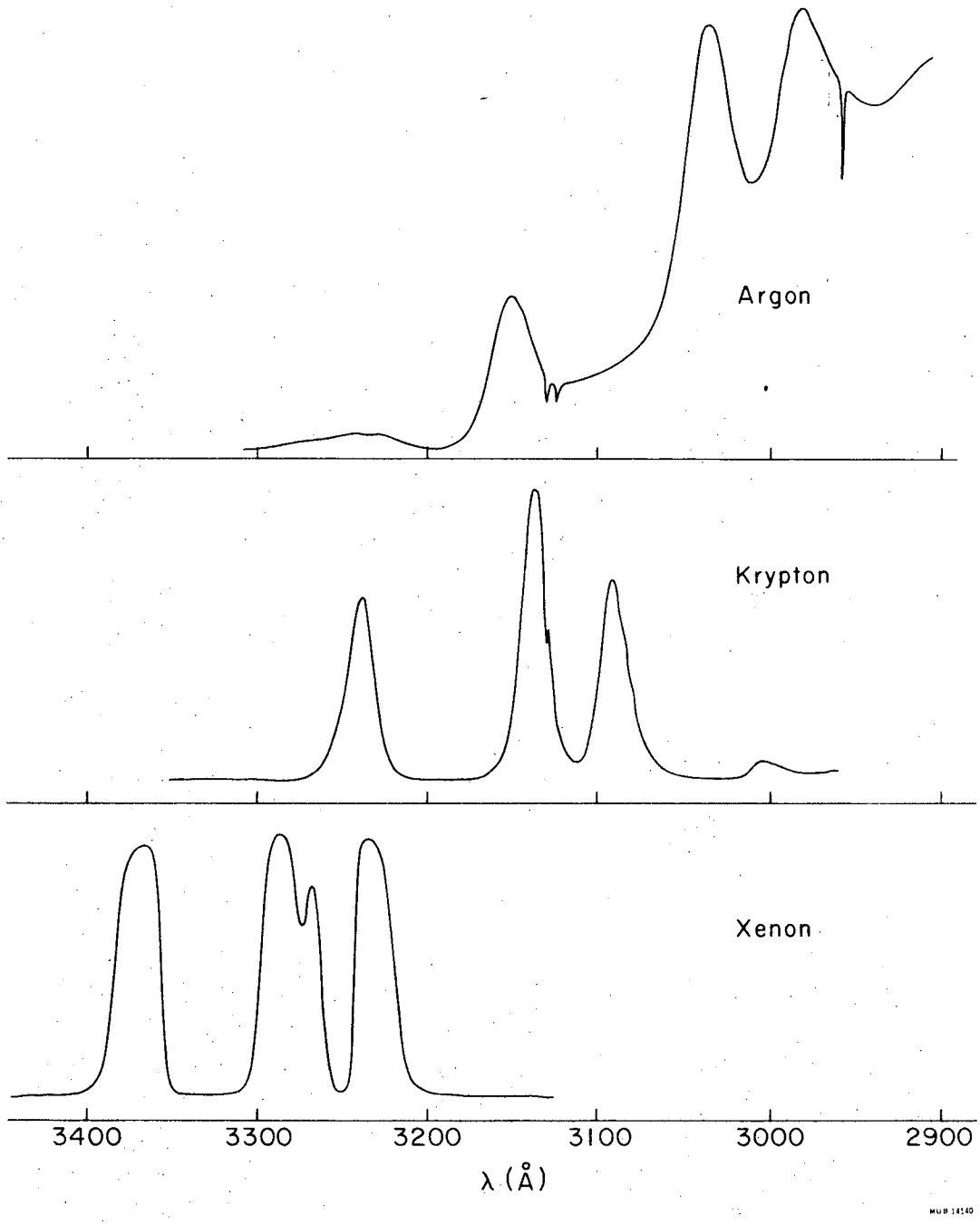
Argon
Krypton
Xenon
3400
3300
3200
3100
3000
2900
λ (Å)
MUB 14140

Fig. 2

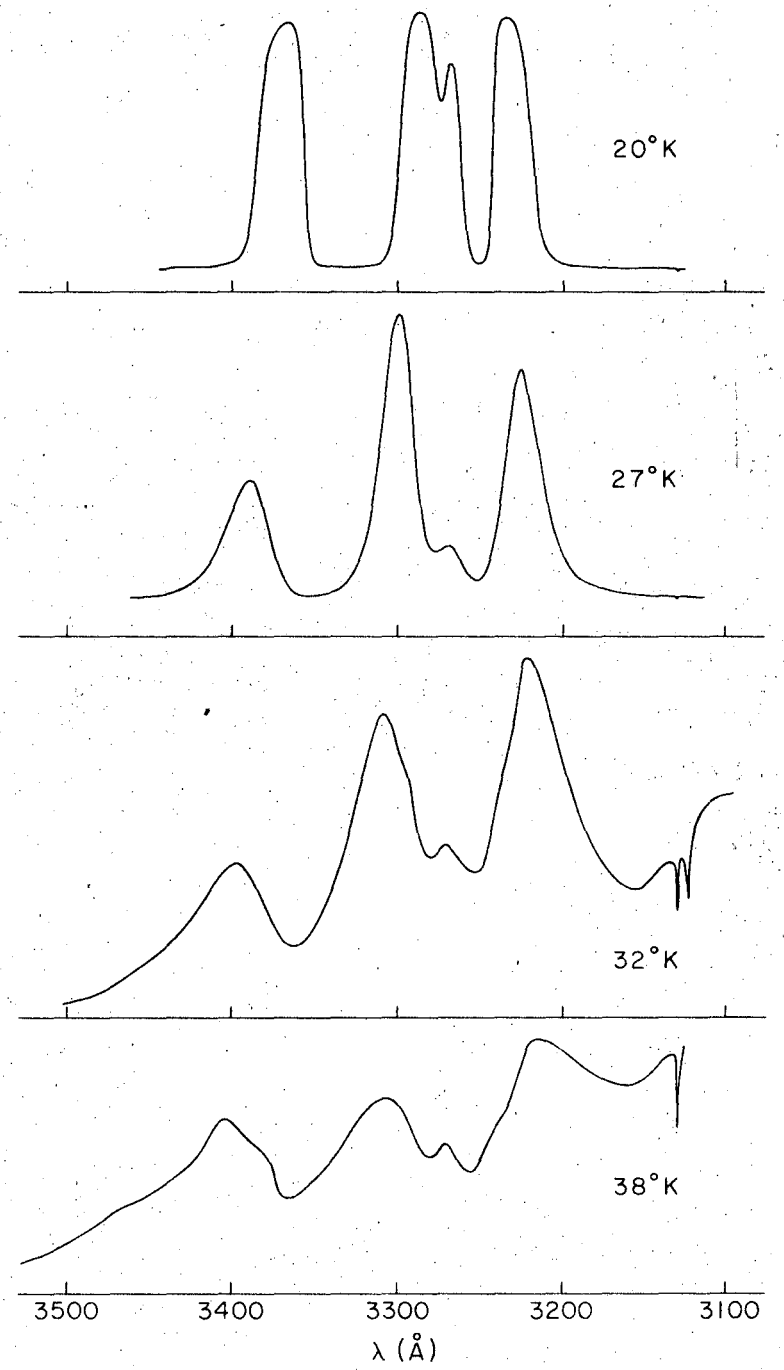

Fig. 3

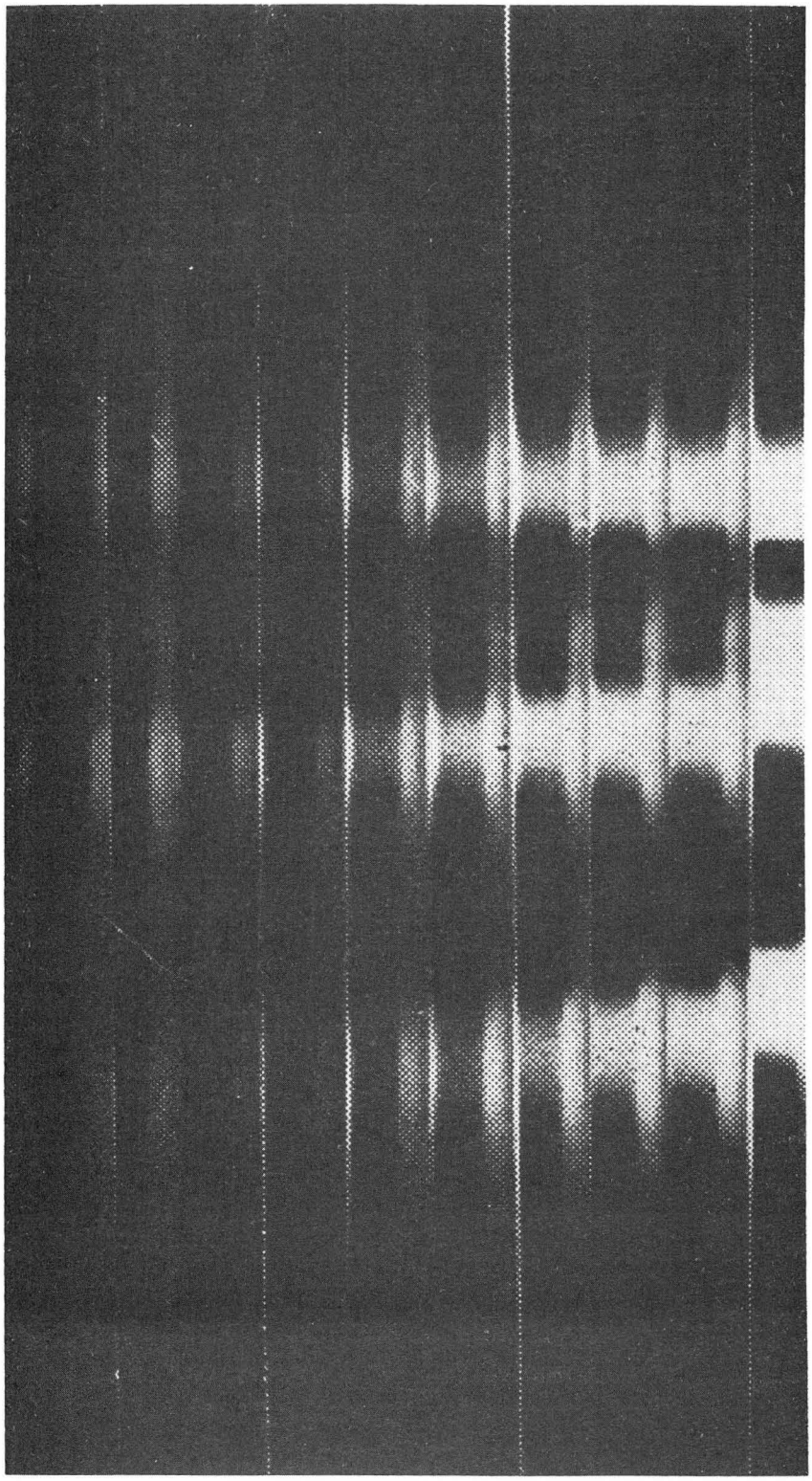

XBB 6912-7711

Fig. 4

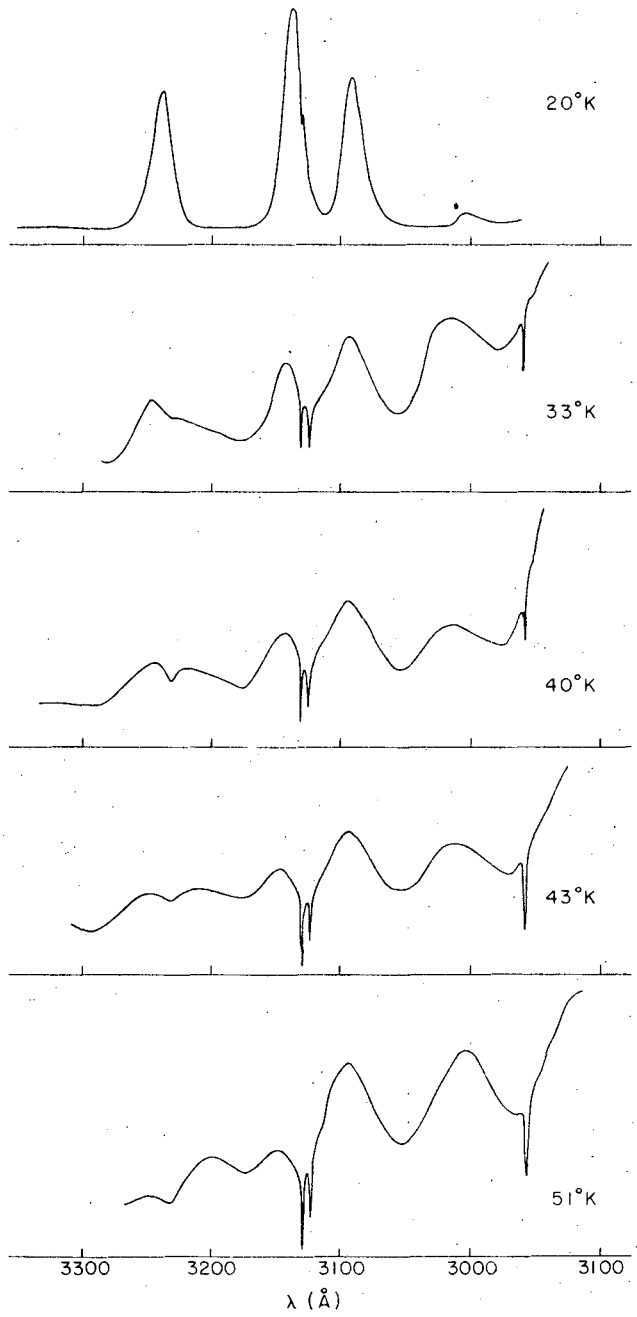

MUB-14138

Fig. 5

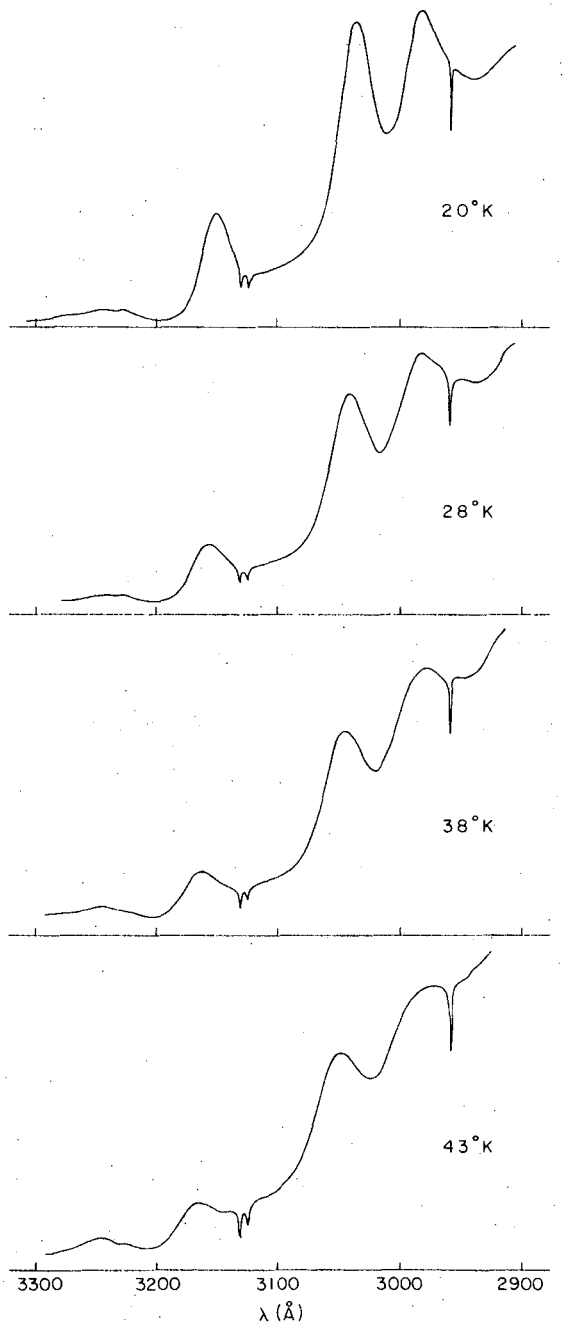

MUB-14139

Fig. 6

LEGAL NOTICE

This report was prepared as an account of Government sponsored work. Neither the United States, nor the Commission, nor any person acting on behalf of the Commission:

A. Makes any warranty or representation, expressed or implied, with respect to the accuracy, completeness, or usefulness of the information contained in this report, or that the use of any information, apparatus, method, or process disclosed in this report may not infringe privately owned rights; or

B. Assumes any liabilities with respect to the use of, or for damages resulting from the use of any information, apparatus, method, or process disclosed in this report.

As used in the above, "person acting on behalf of the Commission" includes any employee or contractor of the Commission, or employee of such contractor, to the extent that such employee or contractor of the Commission, or employee of such contractor prepares, disseminates, or provides access to, any information pursuant to his employment or contract with the Commission, or his employment with such contractor.

TECHNICAL INFORMATION DIVISION
LAWRENCE RADIATION LABORATORY
UNIVERSITY OF CALIFORNIA
BERKELEY, CALIFORNIA 94720