UCRL-17109

University of California
Ernest O. Lawrence Radiation Laboratory

POOL SIZES OF METABOLIC INTERMEDIATES AND THEIR RELATION TO GLUCOSE REPRESSION OF β-GALACTOSIDASE SYNTHESIS IN *Escherichia coli*

TWO-WEEK LOAN COPY

This is a Library Circulating Copy which may be borrowed for two weeks. For a personal retention copy, call Tech. Info. Division, Ext. 5545

Berkeley, California

DISCLAIMER

This document was prepared as an account of work sponsored by the United States Government. While this document is believed to contain correct information, neither the United States Government nor any agency thereof, nor the Regents of the University of California, nor any of their employees, makes any warranty, express or implied, or assumes any legal responsibility for the accuracy, completeness, or usefulness of any information, apparatus, product, or process disclosed, or represents that its use would not infringe privately owned rights. Reference herein to any specific commercial product, process, or service by its trade name, trademark, manufacturer, or otherwise, does not necessarily constitute or imply its endorsement, recommendation, or favoring by the United States Government or any agency thereof, or the Regents of the University of California. The views and opinions of authors expressed herein do not necessarily state or reflect those of the United States Government or any agency thereof or the Regents of the University of California.

Submitted to The Biochemical Journal

UCRL-17109
Preprint

UNIVERSITY OF CALIFORNIA
Lawrence Radiation Laboratory
Berkeley, California

AEC Contract No. W-7405-eng-48

POOL SIZES OF METABOLIC INTERMEDIATES AND THEIR RELATION TO GLUCOSE REPRESSION OF β-GALACTOSIDASE SYNTHESIS IN *Escherichia coli*

C. Prevost and V. Moses

August 1966

UCRL 10187

Pool Sizes of Metabolic Intermediates and their Relation to Glucose Repression of β-Galactosidase Synthesis in *Escherichia coli*

By C. PREVOST* AND V. MOSES

Lawrence Radiation Laboratory, University of California

Berkeley, California, U.S.A. 94720

1. The intermediary metabolism of two strains of *Escherichia coli* has been examined. One strain (Q22) exhibits acute transient repression of β-galactosidase synthesis when glucose is supplied to cells growing on glycerol; the other strain (W3110) does not. The two strains do not differ genetically in their *lac* operons. 2. Q22 uses about twice as much glucose as W3110 per unit of cell mass produced. 3. Pentose phosphate cycle activity in the presence of glucose is much stronger in Q22 than in W3110. 4. In Q22 the pool sizes of glucose 6-phosphate, 6-phosphogluconate, fructose 1,6-diphosphate and NADPH increase when glucose is added to cells growing on glycerol and β-galactosidase synthesis is severely inhibited. After about 1 hr. the synthesis of β-galactosidase is partly resumed, and the pool sizes of the four compounds fall. ATP, NADH and several other phosphorylated compounds show no concentration changes. 5. These concentration changes do not occur in strain W3110, in which β-galactosidase synthesis is only rather weakly repressed by glucose. 6. It is suggested that repression of enzyme synthesis by glucose requires the rapid operation of the pentose phosphate cycle, and is mediated by one of the four substances

*Present address: Institut de Chimie Biologique, Faculté des Sciences, Université de Strasbourg, Rue René Descartes Esplanade 67, Strasbourg, France.

whose concentration rises and later falls in strain Q22. A definite choise of effector from among these four possibilities cannot at present be made.

The phenomenon of catabolite repression in bacteria (Magasanik, 1963) may be considered from three points of view: (a) the chemical nature of the effector substance which is responsible for the repression; (b) the regulatory site at which the effector acts; and (c) the step in enzyme induction and synthesis which is repressed. Nakada & Magasanik (1964) have shown that in the β-galactosidase system in Escherichia coli catabolite repression prevents the primary transcription of messenger RNA for this enzyme, while Palmer & Moses (196) have investigated the site of effector action. The present communication is concerned with the chemical identity of the effector which exerts the represnive action during glucose metabolism.

Ample evidence exists showing that the effector is not glucose or some other sugar supplied as substrate since catabolite repression requires the rapid, "luxurious" metabolism of the substrate, resulting in some sort of metabolic imbalance (Neidhardt, 1960; Magasanik, 1961;

Moses & Prevost, 1966). Glucose itself does not cause repression if added to cells which are unable to use it effectively (Loomis & Magasanik, 1965; Magasanik & Bojarska, 1960), even though repression may still be obtained with other substrates. Similarly, glucose fails to cause repression if it is continuously added to the culture in quantities sufficiently small to limit the rate of growth (Clark & Marr, 1964). Alternatively, catabolite repression is observed when cells growing in the presence of a non-repressing substrate, such as succinate, are unbalanced metabolically. This may be achieved by preventing the cells from effectively using metabolites as a result of withholding an essential nutrient (McFall & Magasanik, 1962; Clark & Marr, 1964; Nakada & Magasanik, 1964) or by the presence of certain inhibitors (Syphard, Strauss & Treffers, 1962; Syphard & Strauss, 1963; Sells, 1965). It is thus clear that the effector is not the substrate itself but is metabolically produced from it.

The observation of transient catabolite repression (Moses & Prevost, 1966; Paigen, 1966) offers the opportunity of correlating kinetic changes in the rate of enzyme synthesis during a growth "shift-up" (e.g., glycerol to glucose) with changes which might occur in the levels of intermediary metabolites. In transient repression maximum repression is observed immediately after the addition of glucose or other substrate, with partial recovery occurring after a variable period depending on the particular strain and conditions used. The bulk of the added glucose remains unused at the time of partial recovery. In such a system one might expect to find that the addition of glucose causes perturbations in the steady-state levels of metabolic intermediates obtaining in cells growing on glycerol. These changed concentrations would later revert

to their original levels, or to new steady-state levels, when the metabolic shift from glycerol as substrate to glycerol plus glucose as substrates is complete (Moses & Prevost, 1966). The effector in such a system might itself be metabolically produced directly from glucose, or its concentration in the cells might be changed when glucose is added even though the effector is derived from another source. The study of metabolic changes in transient repression, rather than in simple repression with no observable recovery, has the advantage for the recognition of the effector substance that not only should its concentration change when glucose is first added, but the change should be reversed at about the time that enzyme synthesis is resumed.

We were fortunate in being able to make this method for identifying the effector more sensitive by using two related strains of E. coli, one of which showed acute transient repression when glucose was added, while the other exhibited only moderate simple repression. These two strains, Q22 and W3110, respectively, were described by Paigen (1966) and are believed to be identical as far as their lac operons are concerned. Differences in their responses to catabolite repression seemed likely to be related to metabolic differences, and a study of intermediary metabolism changes during growth shifts from glycerol to glucose was therefore undertaken with these two strains.

MATERIALS AND METHODS

Organisms. The K12 strains of E. coli Q22 and W3110 (Paigen, 1966) were obtained from Dr. K. Paigen. Both strains are $lac^+gal^+B_1^-$.

Medium and culture conditions. All experiments were performed with the following low-phosphate medium: $MgSO_4$, 0.4 mM; $(NH_4)_2SO_4$, 7.6 mM;

NaCl, 8.5 mM; KH_2PO_4, 0.75 mM; tris, 0.1 M; glycerol, 22 mM; the pH was adjusted to 7.2 with HCl.

For most experiments, 10-15 ml. of medium, inoculated with cells from an overnight culture, were vigorously aerated in a 250 ml. Erlenmeyer flask at 37°. Growth was monitored by measuring the extinction of the culture at 650 mμ in a 1 cm. cuvette, using a Beckman DK-2 double-beam spectrophotometer. Extinction is directly proportional to total protein (Moses & Prevost, 1966). In experiments requiring the continuous measurement of respiratory $^{14}CO_2$, 1 ml. of culture was placed in the growth chamber described below and kept at 37° in a temperature-controlled room. Mixing of the culture and aeration were achieved by constantly bubbling water-saturated air through the medium at the rate of 65-80 bubbles/min. (4-5 ml./min.).

The growth chamber (Fig. 1) consisted of a glass tube terminating
[INSERT FIG. 1 NEAR HERE]
at the bottom in a strong capillary tube and open at the top. A piece of rubber tubing, connected to another capillary tube, could be slipped over the top end of the growth chamber after the addition of labelled substrate. The bottom capillary was clamped rigidly to the bottom of a black lucite box. Near the bottom of the growth chamber, and directed towards the culture, were two conical pieces of lucite mounted at right angles to one another. These cones were painted black over a coat of white paint except for the ends, which were polished optically flat. One cone served to funnel light from a lamp source which was firmly attached to the side of the black lucite box. The other cone conducted light scattered at right angles by the culture to a small silicon photocell (4.8 mm. x 19.1 mm., Hoffman Electronics Corp., El Monte, Calif.,

U.S.A.) which was mounted in another lucite enclosure, contiguous to the chamber containing the growth vessel, and completely light-tight. The photocell was shorted with a 100 Ω resistor and the voltage read with a millimicrovoltmeter (Keithley Instruments, Inc., Cleveland, Ohio, U.S.A.; model 149) connected to a chart recorder (Autograph Model 86; Moseley Division, Hewlett-Packard Instrument Co., Pasadena, Calif., U.S.A.). It was possible to monitor the bubbling rate as well as the growth of the cells since each bubble produced a blip in the voltage reading. The effluent air was led to a detection unit for measuring $^{14}CO_2$. With this equipment the light scattered was directly proportional to the extinction at 650 mμ.

Enzyme induction and assay. The synthesis of β-galactosidase was induced by adding isopropyl-thio-β-D-galactoside (IPTG; 0.5 mM) to exponentially growing cells. Samples were collected and enzyme measured as described previously (Moses & Prevost, 1966).

Radiochemical determinations. (a) Glucose utilization. This was determined by measuring the removal of ^{14}C from the medium after the addition to the culture of [G-^{14}C]glucose (21.8 mμC/μmole). Samples of the culture were filtered through dry millipore filters (0.45 μ pore size) and aliquots of the filtrate counted in a Packard Tri-Carb Scintillation Counter.

(b) $^{14}CO_2$ production. The rate of $^{14}CO_2$ production in the effluent gas stream from the growth chamber was measured continuously by leading the gas through a scintillation flow cell (4-5 ml. vol.) filled with anthracene crystals (Chroma/cell detector assembly and counter, Nuclear-Chicago Corp., Des Plaines, Illinois, U.S.A.). The counting efficiency was about

45%. The flow cell was directly connected to the growth chamber (Fig. 1) and the stream of air bubbles passing through the culture swept the evolved $^{14}CO_2$ to the scintillation cell. There was a 1 min. lag between the production of $^{14}CO_2$ in the growth chamber and its detection in the anthracene cell. The specific radioactivities of the [1-^{14}C]glucose and [6-^{14}C]glucose used as substrates were 0.36 μC/μmole and 0.38 μC/μmole, respectively.

(c) Sugar phosphates and nucleotides. The cells were grown in the low phosphate medium containing $KH_2{}^{32}PO_4$ (300 μC/μmole). Cells were killed by placing a sample (20 μl.) of the suspension on the origin of a sheet of chromatogram paper; the origin had been moistened 15 sec. earlier with a drop of the phenol chromatographic solvent. The solvent and the cells were dried together in the following 20-30 sec. by a stream of dry N_2. The phosphorylated esters were separated by paper chromatography in two dimensions using either Whatman No. 1 paper or Ederol No. 202 paper (J. C. Binzer, G.M.B.H., Hatzfeld/Eder, Germany). For the first dimension the solvent was liquefied phenol (88% w/v):water: glacial acetic acid:1 M-EDTA (84:16:1:0.1, v/v/v/v); for the second dimension the solvent was butan-1-ol:propionic acid:water (46.5:22.7:30.8, v/v/v). The solvents were overrun twice the length of the paper in each direction. The phosphate esters were localized by radioautography, the spots excised from the chromatograms and counted directly, with an efficiency of 78%, with the automatic spot counter developed by Moses & Lonberg-Holm (1963).

(d) Nicotinamide adenine dinucleotides. Essentially a technique similar to that for the sugar phosphates and nucleotides was used. Based on the differential stabilities of oxidized and reduced nicotinamide adenine

dinucleotides to acid and base (Lowry, Passonneau & Rock, 1961) the following procedure was adopted.

For the measurement of NADH and NADPH a sample (200 µl.) of the culture growing in the presence of ^{32}P was added to 100 µl. of 0.25 N-NaOH and placed in boiling water for exactly 3 min.: this process preferentially destroys NAD^+ and $NADP^+$. The extract was chilled in iced water and then neutralized with 100 µl. of 0.25 N-HCl. Methylene blue (25 µl. of a solution containing 20 mg./ml. in water) was then added to catalyze the air oxidation of the reduced nicotinamide adenine dinucleotides which would otherwise have been partially destroyed during the ensuing chromatography in the acidic solvents. It was essential to add carrier NAD^+ and $NADP^+$ to the cell extract in order to obtain quantitative chromatographic recoveries of the labelled nicotinamide adenine dinucleotides present therein: no labelled NADP was detected unless carrier NADP was added. Consequently, NAD^+ and $NADP^+$ (0.75 µmoles of each) were added to the neutralized extracts. To measure NAD and NADP, the order of addition of NaOH and HCl was reversed; heating in acid preferentially destroys NADH and NADPH.

The chromatographic separations and radioactivity determinations were carried out as for the sugar phosphates and nucleotides except that the solvent was not overrun in the first dimension. The decomposition products of the alkali and acid treatments did not interfere in the chromatographic separation of the intact nicotinamide adenine dinucleotides.

When taking samples of the cell suspensions for determination of the levels of oxidized and reduced nicotinamide adenine dinucleotides

it was essential to avoid any delay between removing a sample from the culture flask and the cessation of all metabolic activity by the cells. Delay might have seriously altered the ratios of oxidized to reduced coenzymes if the cells had been allowed to spend time in an environment in any way different from that in the culture flask. It was thus inadvisable to regulate sample size by careful pipetting, but rather to remove samples rapidly, if inaccurately, and to adopt an approach other than volumetric measurement for the subsequent estimation of the volume of cell suspension actually used for chromatography. The sample size was therefore accurately measured by counting the origins of the chromatograms, before applying the solvents, with a Geiger counter with two detectors, one on each side of the paper. Aluminium plates were used to shield the origins and attenuate the emitted radiation to a level where it could conveniently be measured. Assuming that a representative portion of the cell suspension was spotted onto each chromatogram, the amount of ^{32}P on the origin was directly proportional to the volume of suspension applied.

Radiochemicals. [1-^{14}C]Glucose and [6-^{14}C]glucose were obtained from New England Nuclear Corp., Boston, Mass., U.S.A.; [G-^{14}C]glucose was prepared by the method of Putman & Hassid (1952); carrier-free $H_3{}^{32}PO_4$ in 0.4 N-HCl was purchased from Oak Ridge National Laboratory, Oak Ridge, Tenn., U.S.A., and was neutralized before use.

RESULTS

Transient repression of induced β-galactosidase synthesis. The effect on the induced synthesis of β-galactosidase of adding glucose to cells of strains W3110 and Q22 growing exponentially on glycerol is

shown in Fig. 2. In strain Q22, the synthesis of β-galactosidase was inhibited severely for a period of 60 min. (approximately 2/3 of a generation) before the synthesis recovered to about 15% of the differential rate established before the addition of glucose. In the case of strain W3110, the differential rate of synthesis was reduced by only 20 to 40% by the addition of glucose and there was no detectable period of severe transient repression.

[INSERT FIG. 2 NEAR HERE]

Gluconic acid was the only other sugar causing a transient inhibition phenomenon in strain Q22. The transient lasted 25 min. and the final differential rate of induced β-galactosidase synthesis was reduced by only 50%. Ribose did not affect the synthesis of β-galactosidase while galactose caused a 40% inhibition of the differential rate of synthesis without causing any transient. Galactose, however, slightly inhibited the growth of strain Q22. The amount of repression caused by the sugars was related to their ability to stimulate the growth rate. Ribose stimulated the growth rate by only 10% while gluconic acid stimulated it by 21%. Glucose stimulated the growth rate by 31% initially, but 60 min. later the growth rate had decreased to a constant value which was 23% faster than the rate established before the addition of glucose.

Glucose utilization. There was a large excess of glucose present in the medium at the time of the recovery which followed the severe period of repression of β-galactosidase synthesis (Fig. 2A). The amount of glucose consumed was proportional at all times to the amount of cell material synthesized (Fig. 2). Strain Q22, however, consumed more than twice as much glucose as did strain W3110 for the synthesis of a similar amount of cell material.

Routes of glucose utilization. When [1-^{18}O]glucose and [6-^{18}O]glucose are added to exponentially growing cells of *E. coli* the amount of $C^{18}O_2$ released from [6-^{18}O]glucose is a very small percentage of the $C^{18}O_2$ released from [1-^{18}O]glucose (D. Rittenberg, personal communication). This means that in the pentose phosphate shunt very little recycling takes place through the aldolase reaction. In practice, therefore, the amount of $^{14}CO_2$ released from [6-^{14}C]glucose represents decarboxylations in the citric acid cycle and the difference between the $^{14}CO_2$ produced from [1-^{14}C]glucose and [6-^{14}C]glucose reflects the operation of the pentose phosphate shunt.

To determine whether there were differences between Q22 and W3110 in the proportions of glucose metabolized through glycolysis and the pentose phosphate shunt, a comparative study of the production of $^{14}CO_2$ from [1-^{14}C]glucose and [6-^{14}C]glucose was undertaken. It is interesting to note that, whereas $^{14}CO_2$ was evolved almost immediately after the addition of [1-^{14}C]glucose, it took 3 to 4 min. after the addition of [6-^{14}C]glucose before $^{14}CO_2$ was released.

The specific rate of $^{14}CO_2$ production (mmole/min./ml. culture/extinction) from [1-^{14}C]glucose was almost three times higher in strain Q22 than in strain W3110 for the first 20 min. after the addition of glucose (Fig. 3). In strain Q22 the specific rate of $^{14}CO_2$ evolved from

[INSERT FIG. 3 NEAR HERE]

[1-^{14}C]glucose and [6-^{14}C]glucose reached a constant value 20 min. and 30 min., respectively, after the addition of glucose (Fig. 3). Once the intracellular metabolic pools were saturated with ^{14}C, the rate of $^{14}CO_2$ production was proportional to the number of cells present in the culture. It was not possible to correlate directly the recovery of β-galactosidase synthesis with a change in the specific rate of $^{14}CO_2$ production.

In strain W3110 even after the metabolic pools were saturated with ^{14}C the rate of $^{14}CO_2$ production was not proportional to the number of cells but continued to increase about twice as rapidly as the rate of growth of the cells for at least 2/3 of a generation.

The pool sizes of sugar phosphates and ATP during transient repression. All the major phosphorylated intermediates which can be derived from glucose were already found in the cells grown exponentially on glycerol and labelled phosphate even before the addition of glucose. The intracellular concentrations of some phosphorylated compounds ~~was~~ were perturbed by the addition of glucose but the appearance of new phosphorylated metabolites was not detected.

Although the growth rate of the cells was increased significantly by the addition of glucose, the intracellular concentration of ATP hardly changed in strain Q22, and it remained at a constant level in strain W3110 (Fig. 4).

[INSERT FIG. 4 NEAR HERE]

The concentration of glucose 6-phosphate in strain Q22 increased 1.7 times within 20 min. of adding glucose while it progressively decreased in strain W3110. The rise in the concentration of glucose 6-phosphate in Q22 was transitory: the pool began to shrink 40 min. after the addition of glucose and continued to contract for another 80 min. when its size reached was less than half that present in the absence of glucose.

The rise in glucose 6-phosphate in Q22 was accompanied by a rise in the intracellular concentration of 6-phosphogluconic acid: the concentration of the latter increased 2.4 times within 20 min. and by 60-80 min. had decreased to a constant level twice as high as that found

before the addition of glucose. It was impossible to detect any 6-phosphogluconic acid in strain W3110 either before or after the addition of glucose.

The same levels of fructose diphosphate were found in strains W3110 and Q22 when growing exponentially on glycerol. The addition of glucose, however, caused immediately a three-fold increase in the intracellular concentration of fructose 1,6-diphosphate in strain Q22, and an increase of barely 1.4-fold in strain W3110. Fifty min. after the addition of glucose to strain Q22 the level of fructose diphosphate had decreased to a constant value still twice as high as the level present in glycerol alone. The concentration of fructose diphosphate in strain W3110, following the initial increase of 40%, continued to increase slowly and, by 100 min., had reached a level 1.7 times higher than the initial level.

No significant changes in concentration of a number of other phosphorylated intermediates associated with glycolysis, or of several nucleotides, was found either in strain Q22 or W3110.

Nicotinamide adenine dinucleotides during transient repression. Due to the relatively high pentose phosphate shunt activity in strain Q22, as revealed by the high $^{14}CO_2$ production from [1-^{14}C]glucose and the presence of a detectable amount of 6-phosphogluconic acid, it was conceivable that a sudden addition of glucose would cause a temporary change in the levels of $NADP^+$ and NADPH. This in turn might be responsible for the transient repression of induced β-galactosidase.

The concentrations of $NADP^+$ + NADPH in strains W3110 and Q22 were 2.2 and 3.2 mmole/ml. culture/extinction, respectively; the ratio $NADP^+$/NADPH, before the addition of glucose, was 0.9 in strain W3110 and 2.0 in strain Q22. It was found that while the level of NADPH remained relatively constant in strain W3110, there was a significant

transitory increase in the level of NADPH in strain Q22 following the addition of glucose (Fig. 5). The scatter in the measurements, however, made it very difficult to determine precisely the length of the transient. There was little change in the concentrations of NAD; the level of this compound remained constant in strain W3110 and decreased slightly in strain Q22.

[INSERT FIG. 5 NEAR HERE]

DISCUSSION

Metabolic differences between strains resistant and susceptible to transient repression by glucose. The differences between catabolite repression patterns in strains Q22 and W3110 have been kinetically correlated with a number of metabolic factors. Strain Q22 utilizes about twice as much substrate glucose as does W3110 for an equivalent amount of cell growth. The extra glucose consumed by Q22 is metabolized via the pentose phosphate cycle as shown by the release of $^{14}CO_2$ from [1-^{14}C]glucose and [6-^{14}C]glucose supplied to the two strains.

The additional pentose phosphate cycle activity is reflected in the pool sizes of several metabolic intermediates intimately associated with this pathway. Thus, the internal concentrations of glucose 6-phosphate, 6-phosphogluconate, fructose 1,6-diphosphate and NADPH all show temporary rises in Q22 but not in W3110. No other compounds demonstrated such temporary changes in concentration, including ATP, NADH and a number of sugar phosphates associated with glycolysis.

The origin of the greater pentose phosphate cycle activity in Q22 is not due to a greater quantity of enzymes leading directly into the cycle. With cells grown on glycerol the content of glucose 6-phosphate dehydrogenase and 6-phosphogluconate dehydrogenase was about equal in

Q22 and W3110 (C. Prevost, unpublished data). However, the *in vivo* activities of those two enzymes might be higher in Q22 when glucose is added as a result of two factors: the rapid increase in the pool size of glucose 6-phosphate immediately glucose is added to the medium (due, presumably, to a greater hexokinase activity), and the greater availability of $NADP^+$. In Q22 before the addition of glucose the concentration of NADPH was only slightly less than in W3110, while the concentration of $NADP^+$ was over twice as high. These conditions of higher concentrations of glucose 6-phosphate and $NADP^+$ would be expected to lead to a greater production of 6-phosphogluconate and later metabolites of the pentose phosphate cycle, with a greater degree of turnover of the cycle as a whole. The rise in 6-phosphogluconate concentration can be seen in Fig. 4, following very closely that of glucose 6-phosphate. The greater catalytic activity of the two enzymes leading into the pentose phosphate cycle, which are both linked to the reduction of $NADP^+$, produces in turn an elevation in the concentration of NADPH (Fig. 5). Due to the difficulty of accurately measuring NADPH the precise kinetics of concentration changes with this compound are not easy to obtain, but in general it is clear that its concentration rises and later falls after glucose is presented to the cells. The rapid production of NADPH presumably exceeds both the cells' requirements for this coenzyme and also their ability to reoxidize it in terminal respiration. An accumulation results leading to a metabolic imbalance, and this persists until the cells are able to achieve a new steady metabolic state in the changed environment caused by adding glucose. The transient rise in the pool of fructose 1,6-diphosphate is probably the result of the accumulation of glucose 6-phosphate (and

hence of fructose 6-phosphate by phosphohexoisomerase catalysis), together with a ready availability of ATP, maintained, quite possibly, by the excess quantities of NADPH.

None of these factors are significant in W3110, in which glucose metabolism as a whole is more restricted. The uptake of the sugar is relatively slow, glucose 6-phosphate does not accumulate, pentose phosphate cycle activity is lower (with 6-phosphogluconate not detectable) and NADPH is not affected. Under such conditions of slower glucose metabolism, transient repression of β-galactosidase does not take place.

Changes in the concentration of NADPH when glucose is added to growing cells have not, so far as we are aware, previously been observed. The studies both by Estabrook, Maitra & Scott (1962) and by Israelstam & Syrett (1965) used dense, resting suspensions of E. coli and baker's yeast, respectively. The latter authors, while detecting the presence of $NADP^+$ and NADPH, found no changes in their pool sizes when glucose was added. The suspensions were so concentrated, however, that the cells must surely have been anaerobic, and one might thus expect that the activity of the pentose phosphate cycle, one of the main sources of NADPH, was negligible. Estabrook et al. using fluorimetry were unable even to detect $NADP^+$ and NADPH in suspensions containing 10^{11} cells/ml. (compared with 10^8 - 10^9 cells/ml. used in the present studies). Early attempts by us to measure $NADP^+$ and NADPH in dilute cell suspensions using fluorimetry also failed, and these coenzymes were detected and measured only because of the very high sensitivity of the ^{32}P-labelling technique combined with chromatography.

The chemical identity of the effector. The findings of a number of other investigators, as well as our own, have suggested that the activity

of the pentose phosphate cycle is of central importance in determining the sensitivity of the cells to catabolite repression by glucose. Loomis & Magasanik (1965), using a mutant strain of E. coli resistant to repression by glucose, reported that some repression was still exerted by gluconate. In a more recent publication, these authors have isolated several mutant strains blocked in metabolic reactions involving phosphorylated esters of carbohydrates and their results would eliminate the sugar phosphates involved with the pentose phosphate cycle, but not NADPH (Loomis & Magasanik, 1966). The metabolic changes observed by Dobrogosz (1966) during shifts in the presence of glucose from aerobiosis (strong catabolite repression) to anaerobiosis (catabolite repression turned off) cannot be directly employed to distinguish between the possible candidates found in the present study.

Neidhardt (1960) isolated a mutant of Aerobacter aerogenes which lacked glucose repression of induced enzyme synthesis but was still subject to repression by glycerol and gluconic acid. He observed, as we did, that the glucose-insensitive strain consumed less glucose for the production of a given cell mass than did the wild type strain which was sensitive to repression by glucose of the induced synthesis of β-galactosidase and histidase. No difference between the hexokinase activities of the two strains existed but a "glucose oxidase" activity was almost completely lacking in the strain insensitive to glucose repression (Magasanik & Bojarska, 1960; Neidhardt, 1960). Neidhardt concluded that this deficiency diminished the overall rate of glucose dissimilation and, presumably, permitted the biosynthetic processes of the cell to maintain a lower effector concentration. "Glucose oxidase"

activity has been found in cell-free extracts of E. coli (Duerre & Ribi, 1963). An active gluconokinase which phosphorylates gluconic acid has also been found in gluconate-grown cells of E. coli (Wood & Schwerdt, 1953). 6-Phosphogluconate could then be metabolized through the pentose phosphate cycle.

The experiments of Faith, Giorgio & Mallette (1964) would also tend to exclude glucose 6-phosphate as the catabolite repression effector involved in induced β-galactosidase formation. They measured the glucose 6-phosphate levels in nitrogen-starved cells and found that the resumption of induced β-galactosidase formation coincided with the disappearance of exogeneous glucose, although the intracellular concentration of glucose 6-phosphate was still very high. They also claimed to have ruled out the sugar phosphates immediately derived from glucose 6-phosphate as being possible effectors, but since they did not measure the intracellular concentrations of these substances, their conclusions cannot be accepted unequivocally. The findings of Loomis & Magasanik (1966), in which a number of carbohydrate intermediates were eliminated as effectors on genetic grounds, may also be criticized along similar lines. Since it is not certain that all the possible biochemical interrelations and pathways actively existing within the cell are known, simple enzymic incompetence resulting from genetic mutation cannot be regarded as an absolute indication for the absence of an intermediary metabolite.

The remaining evidence for or against NADPH or sugar phosphates rests on experiments which cannot be interpreted unambiguously in favour of one or the other compound since they involve no direct

measurements of their concentrations. Shifts from aerobiosis to anaerobiosis cause a severe decrease in the rate of growth of the cells, but after some time a new rate of growth is established. During that lag, catabolite repression of induced β-galactosidase is relieved (Cohn & Horibata, 1959). Addition of nitrate or nitrite, which to some extent can replace oxygen as an oxidizing agent, prevents the relief of catabolite repression under anaerobic conditions (Dobrogosz, 1965). These experiments may equally implicate NADPH or the sugar phosphates.

In non-growing cells, dinitrophenol, an uncoupler of oxidative phosphorylation, relieves catabolite repression caused by substances which are metabolized aerobically only (e.g., acetate and succinate); it does not, however, relieve the repression caused by substances, such as glucose and fructose, which are also metabolized anaerobically (Mandelstam, 1961). This might favor NADPH as the catabolite corepressor because dinitrophenol stimulates the rate of oxidation and this could result in lowering the concentration of NADPH. Since dinitrophenol was unable to relieve catabolite repression caused by glucose, the sugar phosphates remain as strong candidates. It is known from work with fungi (Moses, 1959; Moses & Smith, 1960) that dinitrophenol and azide (another uncoupler of oxidative phosphorylation) do not alter the pools of the sugar phosphates when glucose is the carbon source. By uncoupling oxidative phosphorylation, dinitrophenol will cause a fall in the ATP concentration. As ATP is required for the synthesis of sugar phosphates from succinate or acetate, the addition of dinitrophenol would be expected to cause a reduction in the amount of sugar phosphates made from these substrates; it might be such an effect, rather than promotion

of NADPH oxidation, which results in the observed relief of catabolite repression. The repression exerted by glycerol could also be explained equally well in terms of sugar phosphates or NADPH. The sugar phosphates produced from glycerol could be oxidized through the pentose phosphate cycle, and a resultant elevation of the level of NADPH would still be a candidate for catabolite corepressor.

Conclusions. The evidence presented in the present communication has suggested four possible candidates for the role of the effector in catabolite repression of β-galactosidase synthesis by glucose: glucose 6-phosphate, 6-phosphogluconate, fructose 1,6-diphosphate and NADPH. A good deal of data obtained by other workers in this field is in agreement with the choice of these candidates. At the present time, however, we are unable to make a definite choice among these compounds either on the basis of our own results or as a result of relevant data published by others. All things considered, NADPH is perhaps the most likely compound but the reasons for choosing that rather than one of the other three tend to be weak. The kinetic correlations reported in this paper have been obtained only in one system, in one type of growth shift, and an extensive study of the comparative kinetic behaviour of these substances under a variety of conditions leading to catabolite repression and its relief is necessary in order to permit a more definite choice to be made.

It should not be overlooked that the direct kinetic investigation of the correlations between metabolite pool sizes and catabolite repression is itself subject to criticism on the basis of possible metabolic compartmentalization (Moses & Lonberg-Holm, 1966). The observation of a change in the pool size of a metabolic intermediate in the cell

as a whole may not be an indication that the local concentration changes at the site where the effector acts. Compartmentation in the metabolism of sugar phosphates has indeed been observed in E. coli (D.C.H. McBrien & V. Moses, manuscript in preparation), and overall pool size measurements may not have the significance which at first sight they appear to possess. The final proof that a particular compound is the catabolite corepressor for a given inducible system must await a demonstration of its specific activity in a highly purified cell-free system devoid of any compartmental barriers and capable of synthesizing the enzyme de novo under inducible control.

The work reported in this paper was sponsored by the U. S. Atomic Energy Commission.

REFERENCES

Clark, D. J. & Marr, A. G. (1964). Biochim. biophys. Acta, 92, 85.

Cohn, M. & Horibata, K. (1959). J. Bact. 78, 624.

Dobrogosz, W. J. (1965). Biochim. biophys. Acta, 100, 553.

Dobrogosz, W. J. (1966). J. Bact. 91, 2263.

Duerre, J. A. & Ribi, E. (1963). Appl. Microbiol. 11, 467.

Estabrook, R. W., Maitra, P. K. & Scott, D.B.M. (1962). Biochim. biophys. Acta, 56, 181.

Faith, W. T., jun., Giorgio, N. A., jun. & Mallette, M. F. (1964). Arch. Biochem. Biophys. 108, 430.

Israelstam, G. F. & Syrett, P. J. (1965). J. exp. Bot. 16, 499.

Loomis, W. F., jun. & Magasanik, B. (1965). Biochem. biophys. Res. Commun. 20, 230.

Loomis, W. F., jun. & Magasanik, B. (1966). J. Bact. 92, 170.

Lowry, O. H., Passonneau, J. V. & Rock, M. K. (1961). J. biol. Chem. 236, 2756.

McFall, E. & Magasanik, B. (1962). Biochim. biophys. Acta, 55, 900.

Magasanik, A. K. & Bojarska, A. (1960). Biochem. biophys. Res. Commun. 2, 77.

Magasanik, B. (1961). Cold Spring Harbor Symp. on Quant. Biol. 24, 249.

Magasanik, B. (1963). In Informational Macromolecules, p. 271. Ed. by Vogel, H. J., Bryson, V. & Lampen, J. O. New York and London: Academic Press Inc.

Mandelstam, J. (1961). Biochem. J. 79, 489.

Moses, V. (1959). J. gen. Microbiol. 20, 184.

Moses, V. & Lonberg-Holm, K. K. (1963). Anal. Biochem. 5, 11.

Moses, V. & Lonberg-Holm, K. K. (1966). J. theoret. Biol. 10, 336.

Moses, V. & Prevost, C. (1966). Biochem. J. in the press.

Moses, V. & Smith, M.J.H. (1960). Biochem. J. 76, 585.

Nakada, D. & Magasanik, B. (1964). J. molec. Biol. 8, 105.

Neidhardt, F. C. (1960). J. Bact. 80, 536.

Paigen, K. (1966). J. Bact. 91, 1201.

Palmer, J. & Moses, V. (196). Biochem. J.

Putman, E. W. & Hassid, W. Z. (1952). J. biol. Chem. 196, 749.

Sells, B. H. (1965). Science, 148, 371.

Sypherd, P. S. & Strauss, N. (1963). Proc. nat. Acad. Sci., Wash. 50, 1059.

Sypherd, P. S., Strauss, N. & Treffers, H. P. (1962). Biochem. biophys. Res. Commun. 7, 477.

Wood, W. A. & Schwerdt, R. F. (1953). J. biol. Chem. 201, 501.

Pool sizes of metabolic intermediates and their relation to glucose repression of β-galactosidase synthesis in Escherichia coli. C. Prevost and V. Moses; Biochem. J. ( ); Lawrence Radiation Laboratory, University of California, Berkeley, Calif., U.S.A. 94720. The intermediary metabolism of two strains of E. coli has been examined. One strain (Q22) exhibits acute transient repression of β-galactosidase synthesis when glucose is supplied to cells growing on glycerol; the other strain (W3110) does not. The two strains do not differ genetically in their lac operons. Q22 uses about twice as much glucose as W3110 per unit of cell mass produced. Pentose phosphate cycle activity in the presence of glucose is much stronger in Q22 than in W3110. In Q22 the pool sizes of glucose 6-phosphate, 6-phosphogluconate, fructose 1,6-diphosphate and NADPH increase when glucose is added to cells growing on glycerol, and β-galactosidase synthesis is severely inhibited. After about 1 hr. the synthesis of β-galactosidase is partly resumed, and the pool sizes of the four compounds fall. ATP, NADH and several other phosphorylated compounds show no concentration changes. These concentration changes do not occur in strain W3110, in which β-galactosidase synthesis is only rather weakly repressed by glucose. It is suggested that repression of enzyme synthesis by glucose requires the rapid operation of the pentose phosphate cycle, and is mediated by one of the four substances whose concentration rises and later falls in Q22. A definite choice of effector from among these four possibilities cannot at present be made.

Captions for figures

Fig. 1. Growth chamber used for respiratory studies. Upper diagram, longitudinal section; lower diagram, section through plane XY. Scale marker: 2 cm. A, cover; B, light-tight enclosure; C, baffle; D, rubber tubing connection; E, cell suspension; F, leads to microvoltmeter & recorder; G, 100 Ω resistor; H, silicon photocell; I, growth chamber; J, capillary tubing; K, effluent gas flow to scintillation counter; L, gas inlet; M, conical lucite light pipes; N, microscope lamp. Arrows indicate direction of gas flow.

Fig. 2. Utilization of glucose and differential synthesis of β-galactosidase in strains Q22 and W3110. IPTG (0.5 mM) added at solid arrows; glucose (10 mM) added at dashed arrows. The mass doubling times before and after the addition of glucose, and the length of transient repression were, respectively (min.): A (Q22): 120, 92, 60; B (W3110): 113, 96, 0. ●, Glucose concentration; ▲, β-galactosidase activity.

Fig. 3. Specific rates of $^{14}CO_2$ release from [1-^{14}C]glucose and [6-^{14}C]-glucose added to cells of strains W3110 and Q22 growing exponentially on glycerol. A, strain W3110; B, strain Q22. Labelled glucose was added in each case at zero time. ○, $^{14}CO_2$ from [1-^{14}C]glucose; ●, $^{14}CO_2$ from [6-^{14}C]glucose; ▲, difference between $^{14}CO_2$ released from [1-^{14}C]glucose and [6-^{14}C]glucose.

Fig. 4. Effect of adding glucose on the intracellular concentrations of some intermediary metabolites in cells growing exponentially on glycerol. Glucose (10 mM) added at arrows. A, strain W3110; B, strain Q22. The scales are in arbitrary units and represent concentration in the culture divided by the extinction. The values are consistent within one compound but cannot be used to compare the levels of different compounds. ■, Glucose-6-phosphate; ●, ATP; O, 6-phosphogluconate; ▲, fructose 1,6-diphosphate.

Fig. 5. Effect of adding glucose on the intracellular concentrations of NADH and NADPH in cells of strains W3110 and Q22 growing exponentially on glycerol. Glucose (10 mM) added at arrows. The measurements have been normalized such that NAD^+ + NADH and $NADP^+$ + NADPH divided by the extinction remain constant over the experimental period. A, strain W3110; B, strain Q22. ●, NADPH; O, NADH. (The dashed lines represent the average concentrations of NADH and NADPH before the addition of glucose. Note that in section B the value for NADPH which appears immediately below the arrow marking the point of glucose addition actually records a sample taken 4 min. after glucose was added.)

Fig. 1. (Prevost + Lucas)

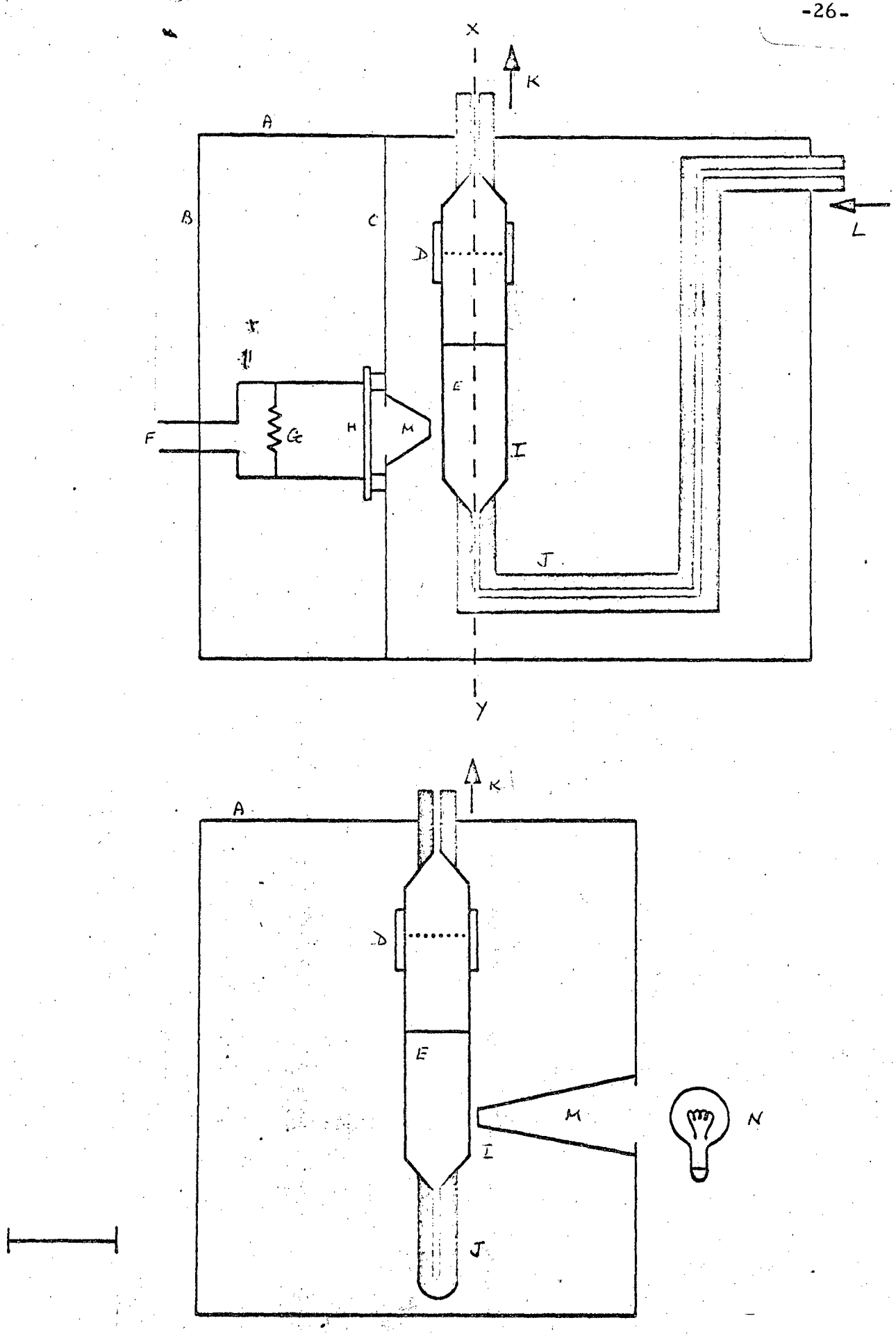

Fig. 1

FIG. 2. (Parent + hybrid)

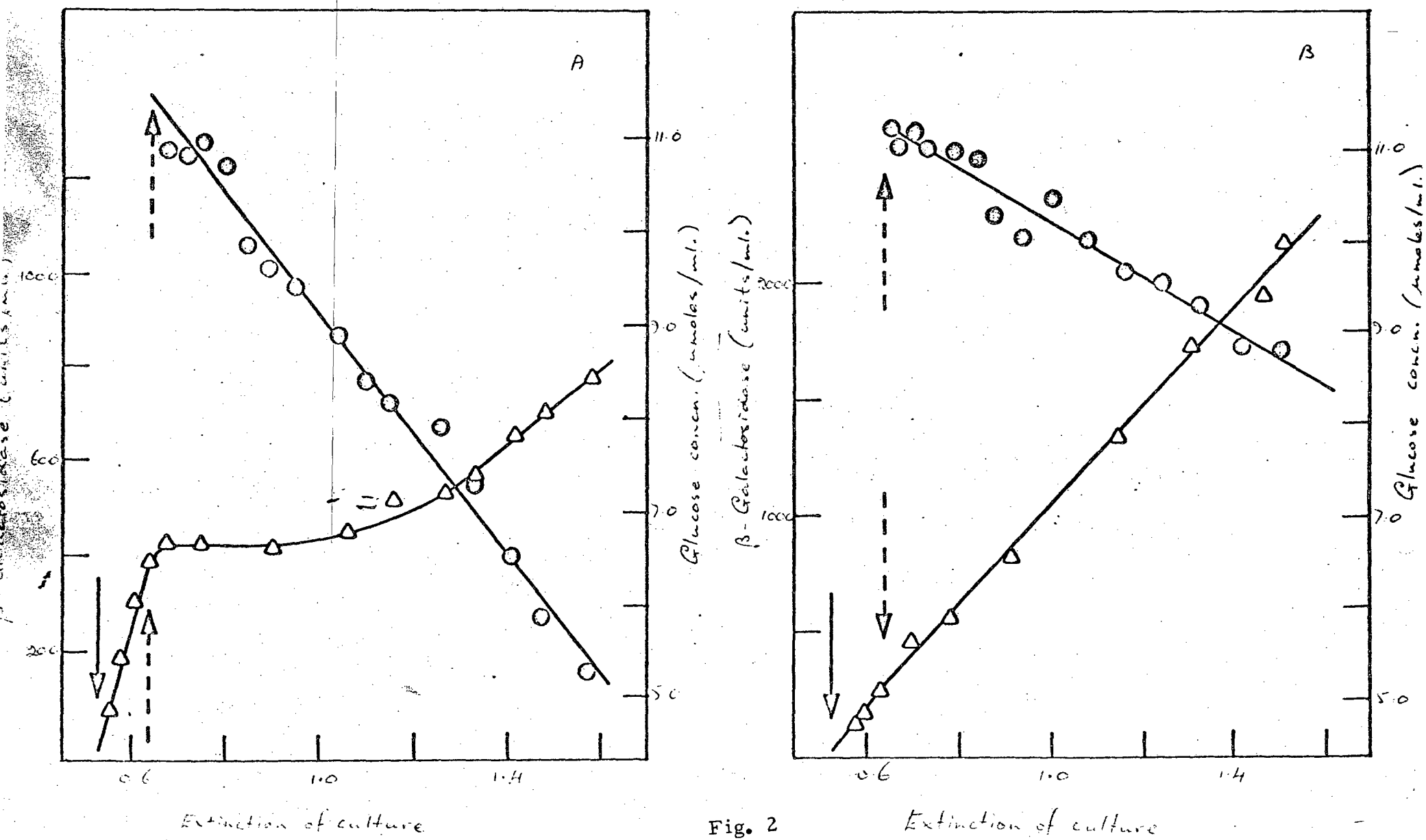

Fig. 2

FIG 3 (Prasad + Lucas).

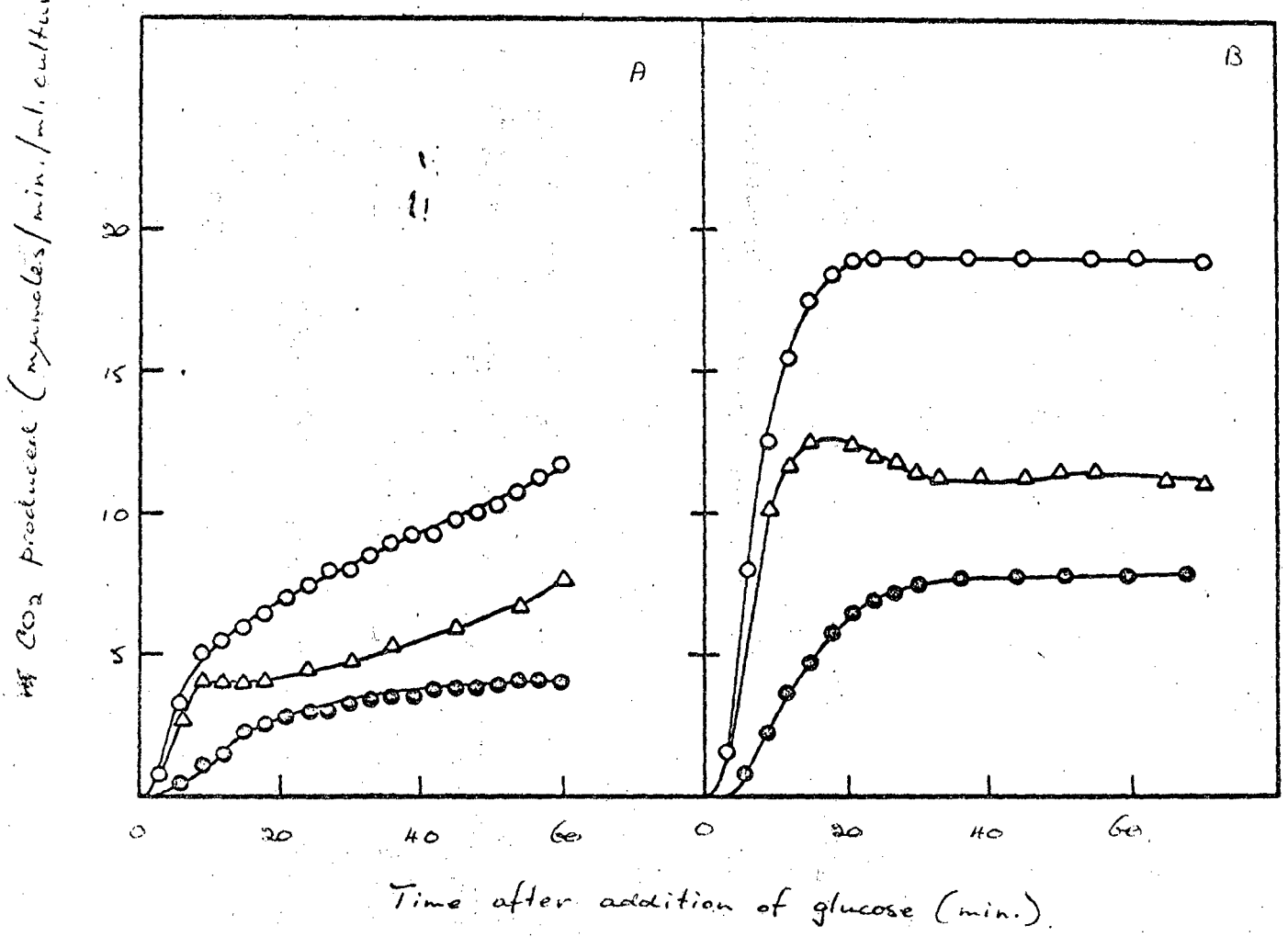

Fig. 3

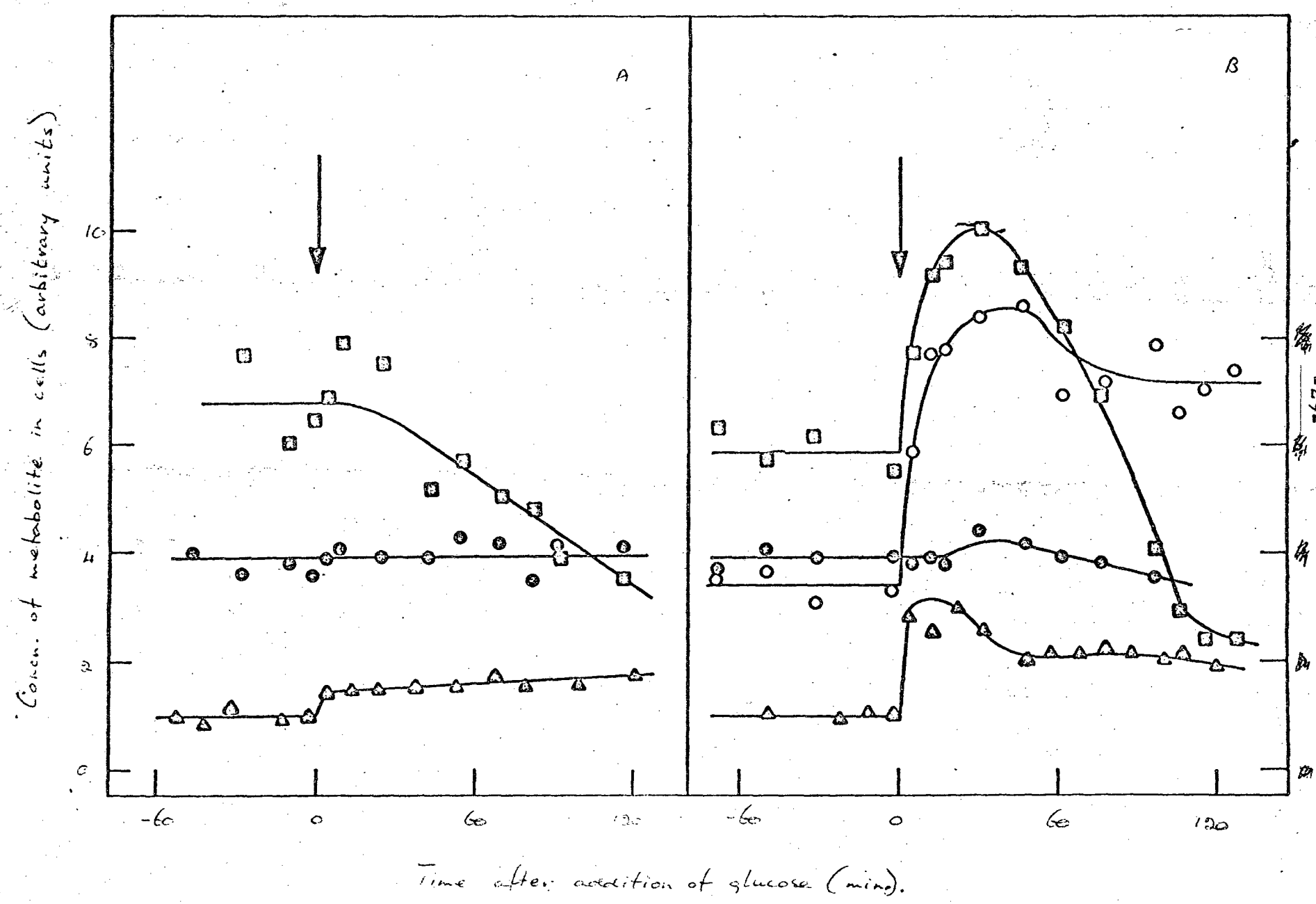
A
B
Concn. of metabolite in cells (arbitrary units)
10
8
6
4
2
0
-60
0
60
120
Time after addition of glucose (mins).

Fig. 4

FIG 5 (Present volume).

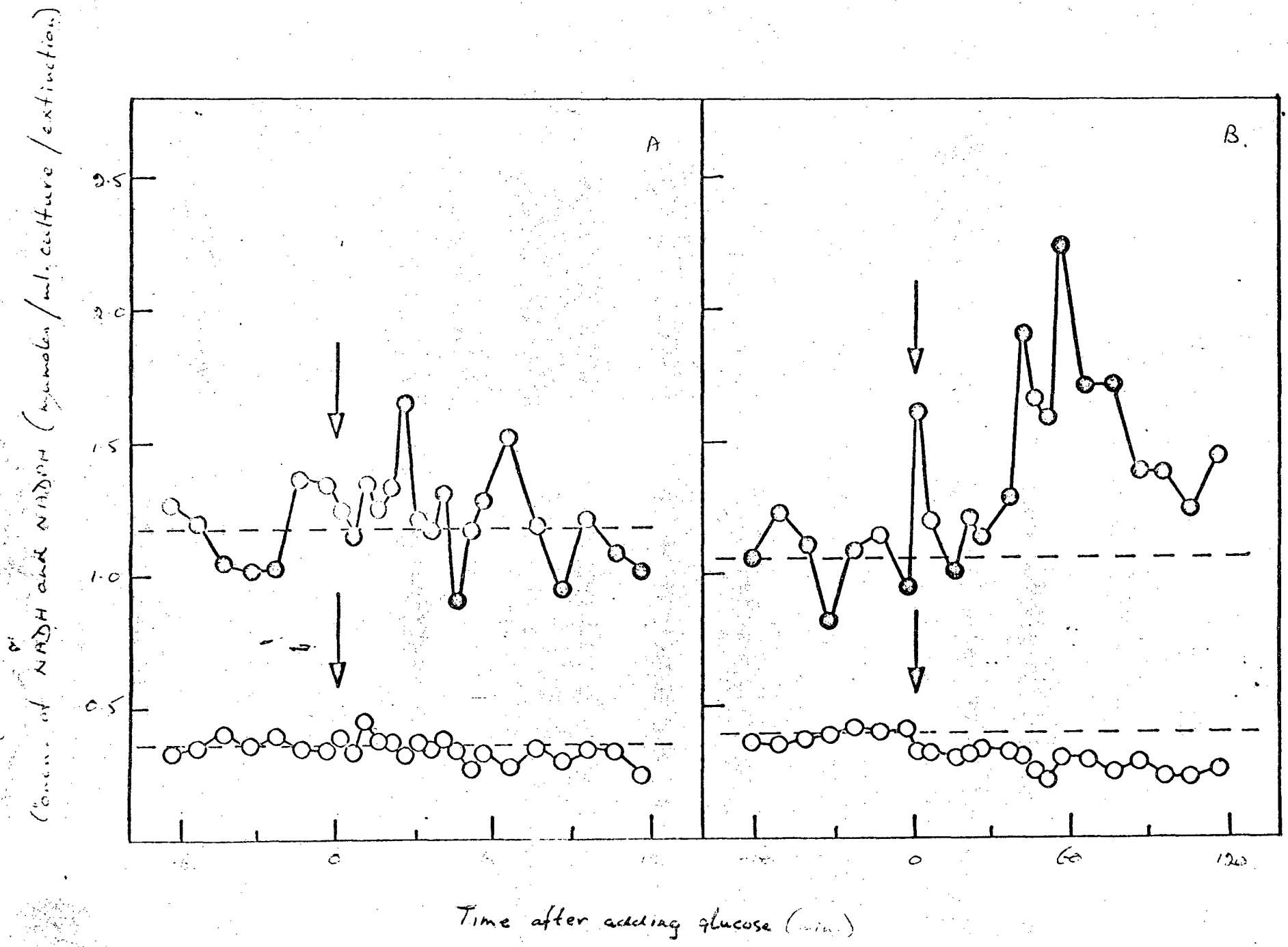

Fig. 5

This report was prepared as an account of Government sponsored work. Neither the United States, nor the Commission, nor any person acting on behalf of the Commission:

A. Makes any warranty or representation, expressed or implied, with respect to the accuracy, completeness, or usefulness of the information contained in this report, or that the use of any information, apparatus, method, or process disclosed in this report may not infringe privately owned rights; or

B. Assumes any liabilities with respect to the use of, or for damages resulting from the use of any information, apparatus, method, or process disclosed in this report.

As used in the above, "person acting on behalf of the Commission" includes any employee or contractor of the Commission, or employee of such contractor, to the extent that such employee or contractor of the Commission, or employee of such contractor prepares, disseminates, or provides access to, any information pursuant to his employment or contract with the Commission, or his employment with such contractor.