UCRL-17129

University of California

Ernest O. Lawrence Radiation Laboratory

A LIQUID HYDROGEN FOCUSING CERENKOV COUNTER

TWO-WEEK LOAN COPY

This is a Library Circulating Copy which may be borrowed for two weeks. For a personal retention copy, call Tech. Info. Division, Ext. 5545

Berkeley, California

Presented at 1966 International Conference on
Instrumentation for High Energy Physics
Stanford, Sept. 1966

UCRL-17129
Preprint

UNIVERSITY OF CALIFORNIA

Lawrence Radiation Laboratory
Berkeley, California

AEC Contract No. W-7405-eng-48

A LIQUID HYDROGEN FOCUSING CERENKOV COUNTER

R. W. Kenney, David O. Caldwell, E. E. McLaughlin,
W. L. Pope, R. V. Schafer, and B. F. Stearns

September 1966

Presented at 1966 International Conference on
Instrumentation for High Energy Physics.
Session 1C, Paper 7.

A LIQUID HYDROGEN FOCUSING CERENKOV COUNTER

R. W. Kenney, David O. Caldwell, E. E. McLaughlin, W. L. Pope
R. V. Schafer, B. F. Stearns
University of California, Berkeley

In a study of CPT invariance, the ratio of total proper lifetimes of π^+ and π^- was inferred from intensities of surviving pions in a "parallel" and "monoenergetic" beam. These intensities were observed at various points along the beam by a velocity selecting Cerenkov counter. Compelling considerations of yield, time dilation, and multiple scattering dictated that liquid hydrogen be the Cerenkov radiator. Figure 1 shows the beam arrangement with which this counter was used and Fig. 2 shows the counter itself.

The counter's characteristics are:

$$\Delta\theta = \pm 3 \text{ deg at half max.}$$

$$\beta = 0.912 \pm 0.005$$

$$\theta_c = 11 \text{ deg}$$

$$E \simeq 0.93 ,$$

where $\Delta\theta$ is the angular acceptance interval for beam particles, βc is the particle velocity, θ_c is the emission angle of the Cerenkov light for velocity βc, and E is the counter efficiency.

If Cerenkov light is reflected from the cylindrical mirror, the ray angle with respect to the cylinder axis is preserved. The light passes into the vacuum through a sapphire window and is reflected into the quarts optics and focussed to a ring aperture. The sapphire window is the entrance pupil of the optics. The high refractive index of sapphire is required so that Cerenkov light, particularly from muons having the correct pion momentum, will be totally internally reflected into a peripheral light trap rather than

being transmitted to the optics (as is the case for quartz). The lens system passes the deep blue Cerenkov radiation with relatively little attenuation and partially cancels dispersive effects in the liquid hydrogen. The ring focus lies outside the quartz vacuum window and for particles of $\beta = 0.912 \pm 0.005$ the focus lies directly upon an annular slit. This light is passed onto an RCA 8575 photomultiplier by a conical air light pipe. Light from off axis or off velocity particles may lie, in part, upon the annular slit and result in an electronic count. At the same time, however, it will nearly always also lie upon an annular region, outside the slit, that is provided with plastic light pipes to conduct light to anticoincidence photomultipliers.

Problems peculiar to the cryogenic aspect of the counter include condensation of residual gas on the cold sapphire window, and scattering of light from bubbles in the hydrogen. Both problems were cured by adequate liquid nitrogen shielding of the window and hydrogen flask. A vac-ion pump also circumvented the inevitable oil contamination arising from diffusion pumping.

A new counter is being constructed along the same lines. Improvements include:

1. Liquid hydrogen and liquid nitrogen shielding closely arrayed about all optical surfaces.

2. Replacement of the sapphire window by a thin 45 deg diagonal mirror and a lateral quartz window. This introduces some optical asymmetry that is judged to be unimportant.

3. Use of liquid deuterium so that an I spin 3/2 state exists for both π^+ and π^-. Pions of $\beta = 0.9$ lie close to the peak of the 33 pion nucleon resonance.

FIGURE LEGENDS

Fig. 1. Experimental arrangement. EPB: 732-MeV external proton beam; SIC: Split ion chamber; T: 6-in. Be target; M_1: 9- by 12-in. C magnet; C: 1-1/2-in.-diam. Pb collimator; M_2: 12- by 36-in. C magnet; Q: 16- by 32- by 16-in. quadrupole triplet; S_1 - S_5: 0.02-in.-thick scintillators; A_1 through A_4: Ring anticoincidence scintillators; A_e: 36-in.-long CO_2-gas Cerenkov counter (10 psia); LH_2C: Moveable liquid-hydrogen Cerenkov counter.

Fig. 2. Schematic drawing of the liquid-hydrogen differential Cerenkov counter. Note that the diameter of the ring focus depends on the angle of emission of the Cerenkov light (and hence the velocity of the particle), while the lateral position of the ring focus with respect to the ring aperture depends on the direction of the particle. The optically coaxial cylindrical mirror provides full efficiency across the 4-in. diameter of the radiator. LH_2: 4- by 8-in.-long liquid-hydrogen radiator; S: 1/4-in. sapphire window; M: 45-deg mirror; L_1, L_2: quartz lenses; Q: quartz vacuum window; A: ring aperture; LP: anticoincidence ring light pipes; C: coincidence photomultiplier; A_R, A_L: anticoincidence photomultipliers; CM: cylindrical mirror.

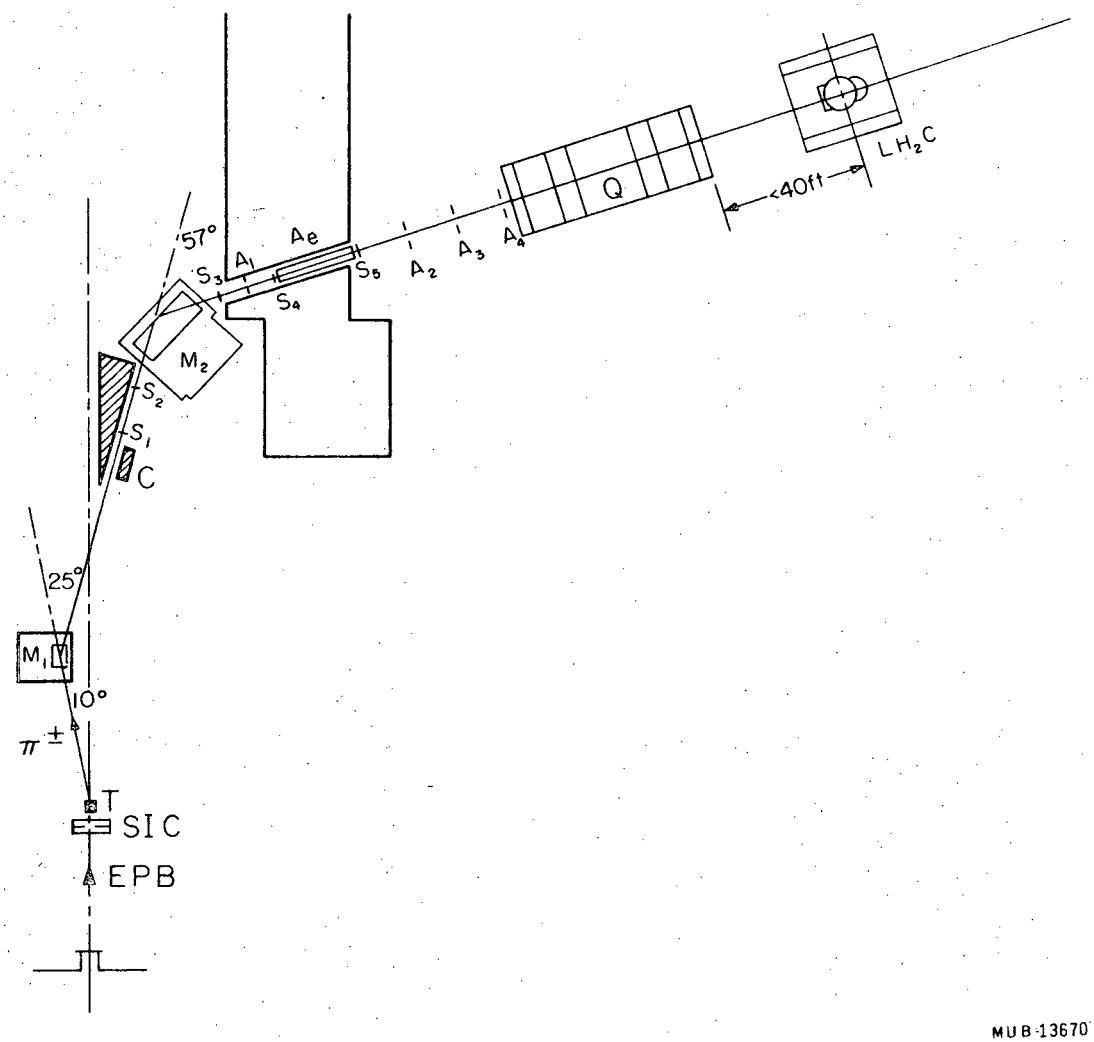
57°
Ae
A1
S3
S5
A2
A3
A4
S4
Q
<40ft
LH2C
M2
S2
S1
C
25°
M1
10°
π±
T
SIC
EPB
MUB-13670

Fig. 1

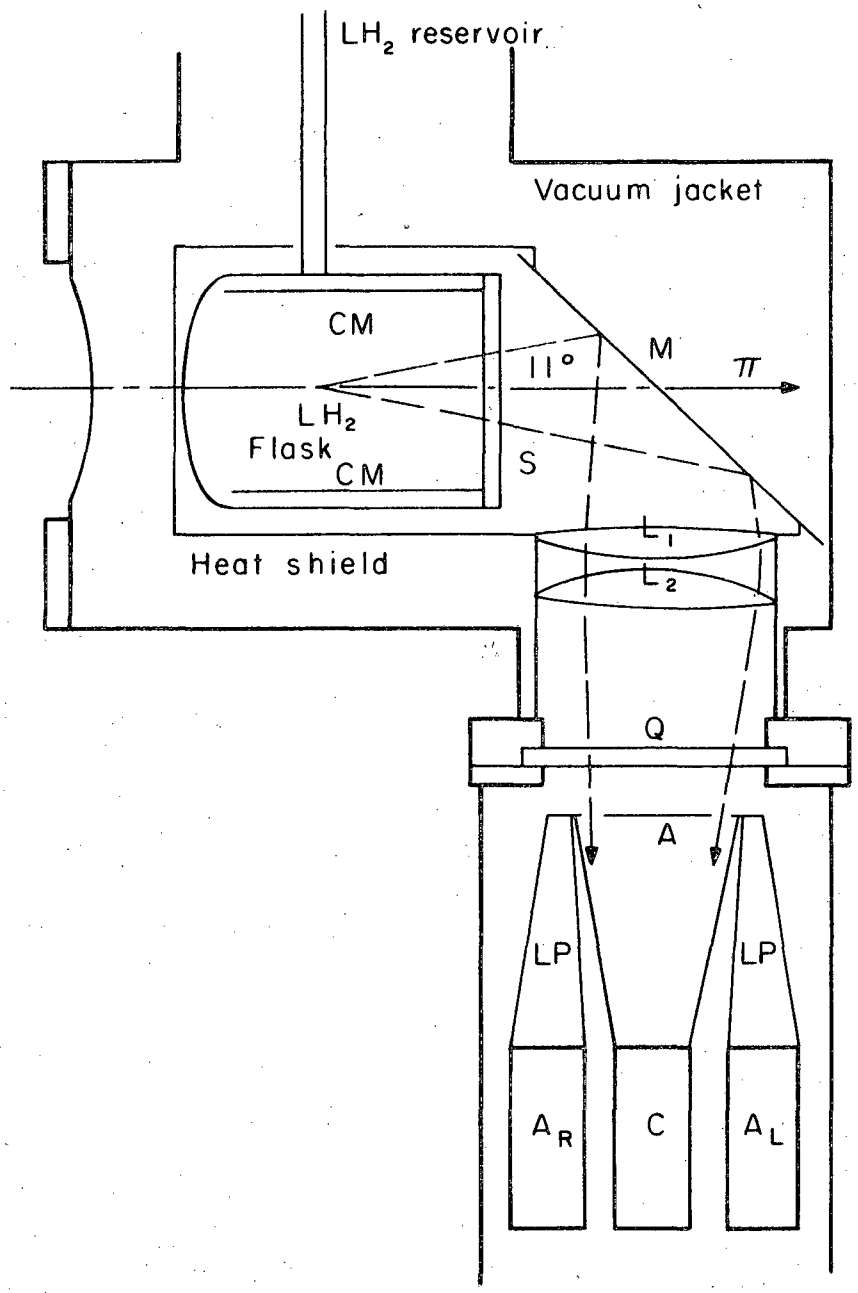

MUB-13668

Fig. 2

This report was prepared as an account of Government sponsored work. Neither the United States, nor the Commission, nor any person acting on behalf of the Commission:

A. Makes any warranty or representation, expressed or implied, with respect to the accuracy, completeness, or usefulness of the information contained in this report, or that the use of any information, apparatus, method, or process disclosed in this report may not infringe privately owned rights; or

B. Assumes any liabilities with respect to the use of, or for damages resulting from the use of any information, apparatus, method, or process disclosed in this report.

As used in the above, "person acting on behalf of the Commission" includes any employee or contractor of the Commission, or employee of such contractor, to the extent that such employee or contractor of the Commission, or employee of such contractor prepares, disseminates, or provides access to, any information pursuant to his employment or contract with the Commission, or his employment with such contractor.