UCRL-17144 Rev.

University of California

Ernest O. Lawrence Radiation Laboratory

ANALYSIS FOR YTTRIUM WITH A SEMICONDUCTOR X-RAY EMISSION SPECTROGRAPH AND AN I^{125} SOURCE

TWO-WEEK LOAN COPY

This is a Library Circulating Copy which may be borrowed for two weeks.

[redacted]

DISCLAIMER

This document was prepared as an account of work sponsored by the United States Government. While this document is believed to contain correct information, neither the United States Government nor any agency thereof, nor the Regents of the University of California, nor any of their employees, makes any warranty, express or implied, or assumes any legal responsibility for the accuracy, completeness, or usefulness of any information, apparatus, product, or process disclosed, or represents that its use would not infringe privately owned rights. Reference herein to any specific commercial product, process, or service by its trade name, trademark, manufacturer, or otherwise, does not necessarily constitute or imply its endorsement, recommendation, or favoring by the United States Government or any agency thereof, or the Regents of the University of California. The views and opinions of authors expressed herein do not necessarily state or reflect those of the United States Government or any agency thereof or the Regents of the University of California.

Report on a summer study project sponsored by the Division of Nuclear Education and Training, U. S. Atomic Energy Commission.

UCRL-17144 Rev.

UNIVERSITY OF CALIFORNIA

Lawrence Radiation Laboratory
Berkeley, California

AEC Contract No. W-7405-eng-48

ANALYSIS FOR YTTRIUM WITH A SEMICONDUCTOR X-RAY EMISSION SPECTROGRAPH AND AN I^{125} SOURCE

Jack F. Klecka

October 3, 1966

Project Supervisor:
Earl K. Hyde

ANALYSIS FOR YTTRIUM WITH A SEMICONDUCTOR X-RAY EMISSION SPECTROGRAPH AND AN I^{125} SOURCE

Jack F. Klecka
St. Olaf College
Northfield, Minnesota

Project Supervisor: Earl K. Hyde
Lawrence Radiation Laboratory
University of California
Berkeley, California

INTRODUCTION

A general discussion of the application of high-resolution semiconductor detectors to non-dispersive X-ray emission spectrography is given by Bowman, Hyde, Thompson, and Jared.[1] In a later report Hyde, Bowman, and Sisson[2] explored the capability of the semiconductor apparatus for some specific analytical problems. One problem selected as a representative of a general class of analytical problems was the quantitative analysis of yttrium on the milligram scale. The radioactive isotope, Am^{241}, was used as a primary source of radiation for the excitation of the characteristic X-rays of yttrium, which were then analyzed for energy and intensity in a silicon detector system.

In the present work the analysis of yttrium samples was restudied with I^{125} substituted for Am^{241} as the primary source. The isotope I^{125} has a half life of 60.2 days for radioactive decay by electron capture to a 35-keV level in Te^{125}, which in turn decays to the ground state by a highly-converted transition. The major radiations are the X-rays of tellurium: Te K_α = 27.3 keV and Te K_β = 31.0 keV. These X-rays are well suited to the excitation of the K X-rays of elements below tellurium. For this purpose I^{125} is superior to Am^{241} not only because of the greater efficiency of excitation of the characteristic X-rays of many elements but also because I^{125} gives rise to a much

smaller background in the 5 to 25 keV energy interval from scattering of the primary radiation. This results in an improved signal-to-background ratio and a substantial increase in sensitivity for the analyzed species.† This can be seen from an observation made by Robert Giauque of this laboratory (unpublished) that the intensity of characteristic X-radiation excited in a milligram-size yttrium sample irradiated successively under identical conditions with a millicurie source of Am^{241} and I^{125} was a factor of nine greater in the latter case.

EXPERIMENTAL APPARATUS AND PROCEDURE

Sample holder. The silicon semiconductor detector was mounted in a cylindrical aluminum housing of 2.6-inch diameter as described in the reports cited above.[1,2] The X-radiations to be analyzed by the detector entered the end of the housing through a thin beryllium window. In order to achieve reproducible sample positioning a sample holder of the design sketched in Fig. 1 was constructed of aluminum and lucite. This holder was mounted on the end of the detector housing by means of a solid ring of aluminum machined to fit snugly over the cylindrical snout of the housing. The slots in this sample holder served to position an aluminum frame upon which the analytical sample was mounted and an aluminum mount for the I^{125} source. These items are illustrated in Fig. 2.

The frame for the analytical sample consisted of a 2-1/2 by 3-1/2 inch piece of 1 mm aluminum stock with a 1-1/2 inch hole drilled in the center. Mylar film or filter paper impregnated with ion exchange resin was stretched

---

†The superior qualities of I^{125} in this regard were pointed out to us by Dr. Barclay Jones of the Technical Measurements Corporation, Menlo Park, California.

across the hole to serve as a thin support of low atomic number material for the analytical sample. This frame support for the analytical sample was slipped into the second or third slot of the sample holder (Fig. 1).

An I^{125} source was prepared from a solution of the isotope obtained from the New England Nuclear Corporation of Boston, Massachusetts. A small volume of solution containing 2 mC was evaporated in a depression in the end of a 10 × 40 mm piece of 5 mm tin stock. The dried activity was covered with a thin film of epoxy cement. This source was slipped into a bracket in the top of a sheet of aluminum also 2-1/2 by 3-1/2 inches as sketched in Fig. 2. This aluminum sheet had a 1-1/2 inch central hole over which was placed a 10 mil copper sheet with a 1/2-inch central hole. This copper sheet served as a collimator to reduce the amount of scattered radiation reaching the detector from any direction other than directly from the analytical sample. The I^{125} radiations were screened from the detector by the tin in which it was mounted and by an additional 1-mm lead absorber. The aluminum sheet supporting the I^{125} source was slipped into the sample holder slot next to one used for the analytical sample mount.

SAMPLE PREPARATION -- MYLAR FILM SERIES

A pure stock solution of yttrium at a concentration of 10 mg per ml was prepared by weighing a sample of 99.9 percent yttrium chloride, dissolving it in HCl, and diluting to volume in a 100 ml volumetric flask. Subsequent dilutions of the stock solution were made to concentrations of 1 mg per ml and 0.1 mg per ml by pipetting 10 ml of the stock solution (or 1 mg per ml solution) into a 100 ml volumetric flask and diluting to volume with distilled water.

Mylar film, 0.00025-inch thick, was cut in strips approximately 3/4-inch wide. The film was fastened to the back of an aluminum mount with Scotch "Magic Mending" tape. This assembly was placed under a heat lamp, and aliquots of the yttrium solutions were placed on the center of the Mylar strips with micropipettes and the solution evaporated with the heat lamp. Volumes transferred were kept to a maximum of 50 microliters to control the location of the dried deposit. Total amount of solution transferred to any one sample was not greater than 250 microliters. Complete drying of the sample was obtained, but the chloride was deliquescent, and quickly became liquid from the moisture absorbed from the air. Although the samples were in a semi-liquid state, they did not run and remained in position when the sample mount was placed in a vertical position in the slot in the sample holder. Sample amounts ranged from 2.5 mg yttrium to 1 microgram.

SAMPLE PREPARATION WITH USE OF ION-EXCHANGE-LOADED PAPER

The usefulness of filter paper loaded with ion exchange resin for preparation of samples at the micro or trace level for X-ray emission spectrography has been studied by Campbell, Spano, and Green.[3] We decided to investigate this method for our purpose because of its simplicity, the possibility of a more uniform distribution sample, and the avoidance of the problems resulting from the deliquescent nature of yttrium chloride samples. We used paper loaded with Amberlite 1R-120 resin manufactured by H. Reeve Angel and Company, Clifton, New Jersey. Their SA-2 series paper is a strong acid ion-exchange resin paper having a strong affinity for a variety of positive ions.

Disks of the grade SA-2 paper, 1/2 inch in diameter, were punched out with a paper punch. Weight of the disks varied between 17.0 and 17.4 milligrams.

According to the figures in Campbell et al.,[3] this corresponds to a resin capacity of approximately 1 mg Y^{+3} cation. The disks were first wetted with 25 microliters of distilled water and allowed to stand for a few minutes in contact with the water. Then the disks were transferred to individual depressions on a ceramic spot plate. Aliquots of the sample solution were pipetted onto the moist disks with micropipettes and allowed to stand for a few minutes to allow the resin to come to near equilibrium with the solution. Then the disks were rinsed with 25 microliters of distilled water, drained, and transferred to a clean location of the spot plate for drying. The remaining solution was pipetted to another moist disk, and the liquid was allowed to be in contact with that disk for a few minutes. The second disk served as a check to see that all the yttrium was held on the first disk. The disks were then dried under a heat lamp. Mounting on the aluminum mount was facilitated by placing a strip of Scotch "Magic Mending" tape across the center of the 1-1/2 inch hole in the aluminum frame used to support the sample. The disk was pressed to the tape with the side that was facing up when the solution was pipetted faced away from the tape. It had been found previously that Scotch "Magic Mending" tape adds little scattering or X-ray peaks to the spectrum. The mounts were then placed in the sample holder.

COUNTING PROCEDURE

When the samples were ready for analysis they were placed in the sample holder and the X-rays excited in the yttrium by the I^{125} source were measured by the semiconductor detector for a period of time ranging from 10 to 30 minutes depending upon the sample size. In the case of the one microgram samples considerably larger count periods were used. The details of energy calibration and data recording were identical to those discussed in Reference 2. The spectra

were recorded in a 400-channel pulse-height analyzer and printed out numerically on paper tape or graphically on an X-Y plotter.

RESULTS

The energy spectra in all cases were essentially identical to those shown in Fig. 12 of the report by Hyde, Bowman, and Sisson.[2] The main difference was the appearance of the spectrum of a blank sample run in the energy interval covering yttrium K X-rays. With I^{125} the background was approximately 25 counts per minute, which was negligibly small compared to the yttrium K X-rays excited in samples containing more than 10 micrograms of yttrium. The background in the same region contributed by scattering of neptunium L X-rays when Am^{241} was used as the primary excitation source was much larger.

Counting rates for the various samples in the Mylar film series are given in Table 1. The calibration curve showing the linearity of the method is given in Fig. 3. Notable is the detection of 1 microgram of yttrium, made possible by the high efficiency and low background of the source-detector combination. Figure 4 shows the spectrum obtained after a 420-minute overnight count with a previous 420-minute background count presubtracted in the pulse-height analyzer memory. Source strength at the time of these runs was approximately 2.2 millicuries of I^{125}. A stronger source would allow a more rapid count at low level. It is felt that with a stronger source and similar long counting time, amounts to 0.1 microgram could have been detected. Some improvement could also be obtained by a more favorable geometric arrangement of source and sample.

Comparison of this experiment's calibration curve with that in the report by Hyde et al. shows that the count rate is only about a factor of two higher. The comparison by Giauque cited above indicates this factor should be more like 9. The difference is explained by a poorer geometric relation between

our sample holder and the sample holder used by Hyde et al. If it were important to increase count rate, a more favorable geometry could be used, and a somewhat larger I^{125} source could also be used to advantage, as stated above.

The statistical error from counting alone varied from about 0.4% for the milligram-sized samples to 4 or 5% for the 10-microgram sized samples. It is noticed from the calibration curve that there is an irregular variance from the straight line that is as great as 30% in a few cases. This error, much larger than statistical counting errors, can be attributed to the criticality of the location of the yttrium sample in relation to the I^{125} source. Qualitative agreement between high or low count rate and closeness to or distance from the source has been established. Not enough time was available in this summer research program for development of all aspects of the preparation technique or a study of the error introduced by such positioning variances. Main interest was directed in showing the sample size region over which fluorescence response was linear and to indicate the level of the count rate.

Table 2 records similar information for the series of samples prepared on the ion-exchange resin-impregnated paper. Figure 5 is the calibration curve obtained from these data. It is noticed that the curve is very similar to the curve of the Mylar film series. The background is not much greater than the Mylar series, being about 30 counts per minute under the yttrium K_α X-ray peak. Again, errors of approximately 20% are evident by the variance of the data from the straight line. These also have been qualitatively attributed to the variations in the positioning of the paper disk in relation to the source.

On counting the disks used to check for complete retention of Y^{+3} by the ion exchange resin, only the 500 microgram and the 250 microgram sample

gave a detectable peak with a 20-minute count time. The data shows that 90% of the 500-microgram sample was retained on the first disk, and 96% of the 250-microgram sample. Hence the loading technique can be considered satisfactory for samples under 250 micrograms in weight.

The low background when using the ion-exchange resin paper makes its use promising for detection of amounts much lower than were considered in this brief investigation.

ACKNOWLEDGMENTS

This work was done under the auspices of the Division of Nuclear Education and Training, U. S. Atomic Energy Commission. I wish to thank Dr. Earl K. Hyde, my advisor and supervisor, for his time and assistance throughout this work. I also wish to acknowledge the help given by Robert Giauque in introducing me to the techniques involved in X-ray emission spectrography of solutions, and to acknowledge the assistance given by Richard Jared and Harry Bowman with the electronics and sample-holder design.

REFERENCES

1. H. R. Bowman, E. K. Hyde, S. G. Thompson, and R. C. Jared, Science 151, 562 (1966).

2. E. K. Hyde, H. R. Bowman, and D. H. Sisson, University of California Lawrence Radiation Laboratory Report UCRL-16845, May 1966 (unpublished).

3. W. J. Campbell, E. F. Spano, and T. E. Green, Anal. Chem. 38, 987 (1966).

Table 1. Count data on yttrium K_α X-rays for samples mounted on Mylar film.

mg yttrium in sample	Count time (min)	Mean counts/min in yttrium K_α peak above background*
2.5 mg	10.0	4847
		4849
2.5 mg'	10.0	5957
		5873
1.0 mg	10.0	3223
1.0 mg'	10.0	3437
0.5 mg	10.0	2060
0.5 mg'	10.0	1705
0.25	10.0	709
0.25'	10.0	895
0.10	10.0	432
0.10'	10.0	398
0.075	20.0	310
0.075'	20.0	381
0.075	20.0	257
0.075'	20.0	340
0.050	20.0	215
0.050'	20.0	209
0.025	20.0	72.6
0.025'	20.0	82.8
0.010	20.0	42.6
		38.6
		47.3
0.005	20.0	19.5
		22.0
		20.6
	30.0	21.7
0.003	20.0	8.6
		11.4
	30.0	9.7
0.001	30.0	3.5
	420.0	3.47

*Average background count under Y K_α peak = 25 c/min.

Table 2. Count data on yttrium K_α X-rays for samples mounted on ion-exchange impregnated paper.

mg yttrium in sample	Count time (min)	Mean counts/min in yttrium K_α peak above background
0.100	20	261.5
0.050	20	148.0
0.025	20	55
0.010	20	38
0.500	5.0	1319
0.500'	20	1384
0.250	10	852

FIGURE CAPTIONS

Fig. 1 Sketch of sample holder.

Fig. 2 Sketch of aluminum frame used for mounting of analytical samples and of second frame used to support I^{125} primary source and copper collimator.

Fig. 3 Calibration curve for yttrium samples prepared by evaporation on Mylar film.

Fig. 4 Curve showing detector of 1μg yttrium. Data collection time 7 hours. Background subtracted.

Fig. 5 Calibration curve for yttrium samples adsorbed on filter paper impregnated with ion-exchange resin.

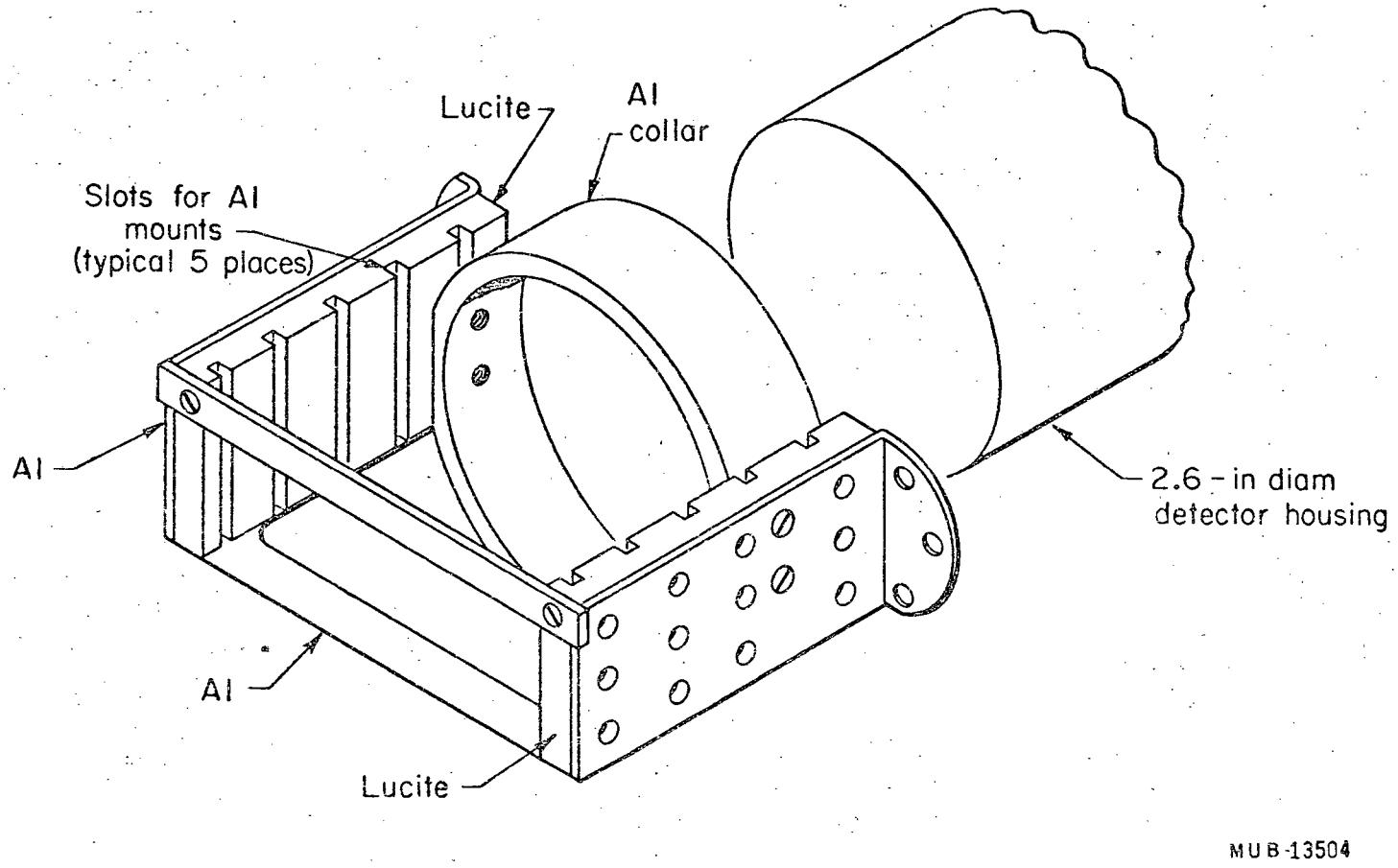
Lucite
Al
collar
Slots for Al
mounts
(typical 5 places)
Al
Al
Lucite
2.6 - in diam
detector housing
MUB-13504

Fig. 1

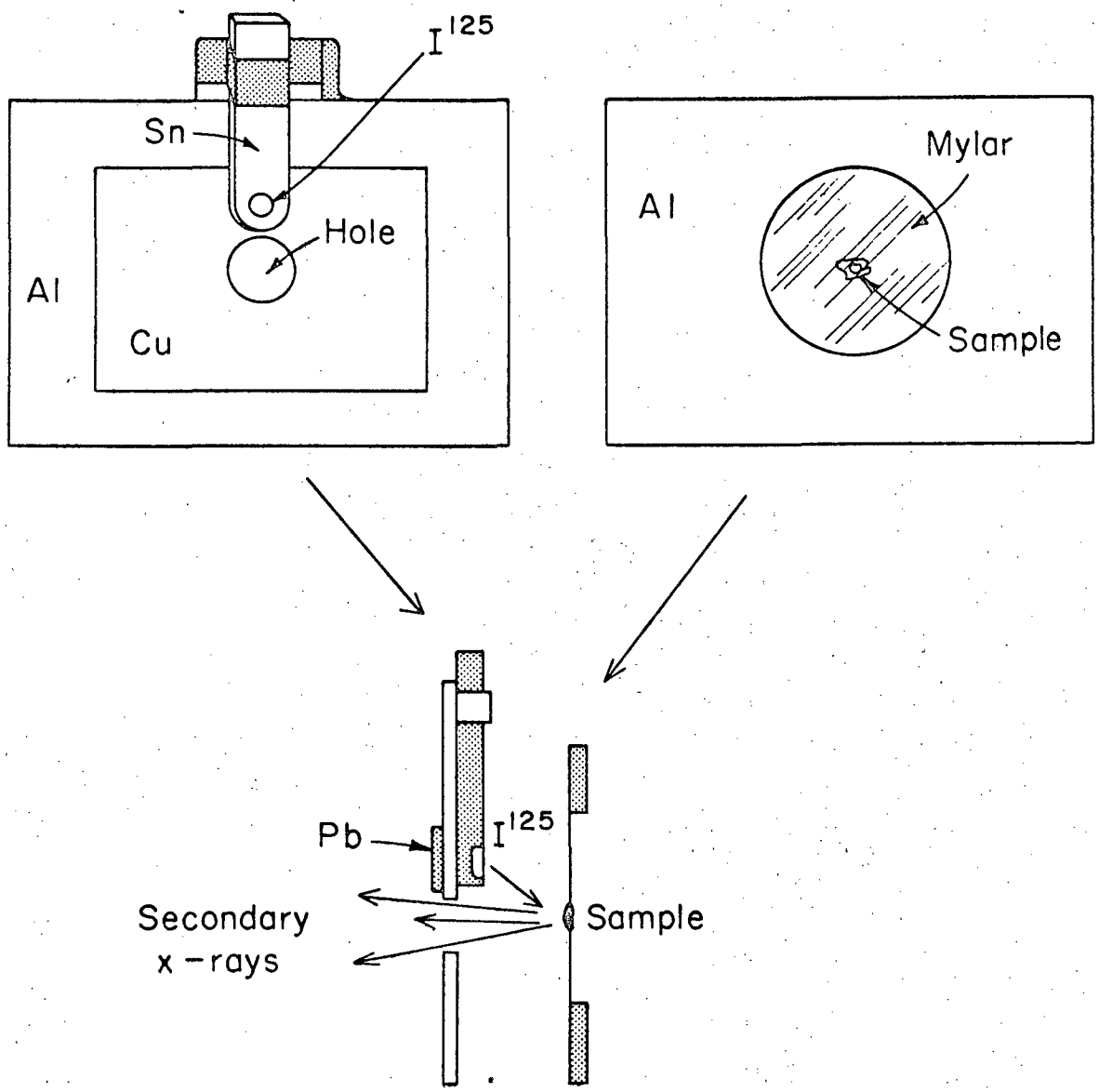

MUB 13505

Fig. 2

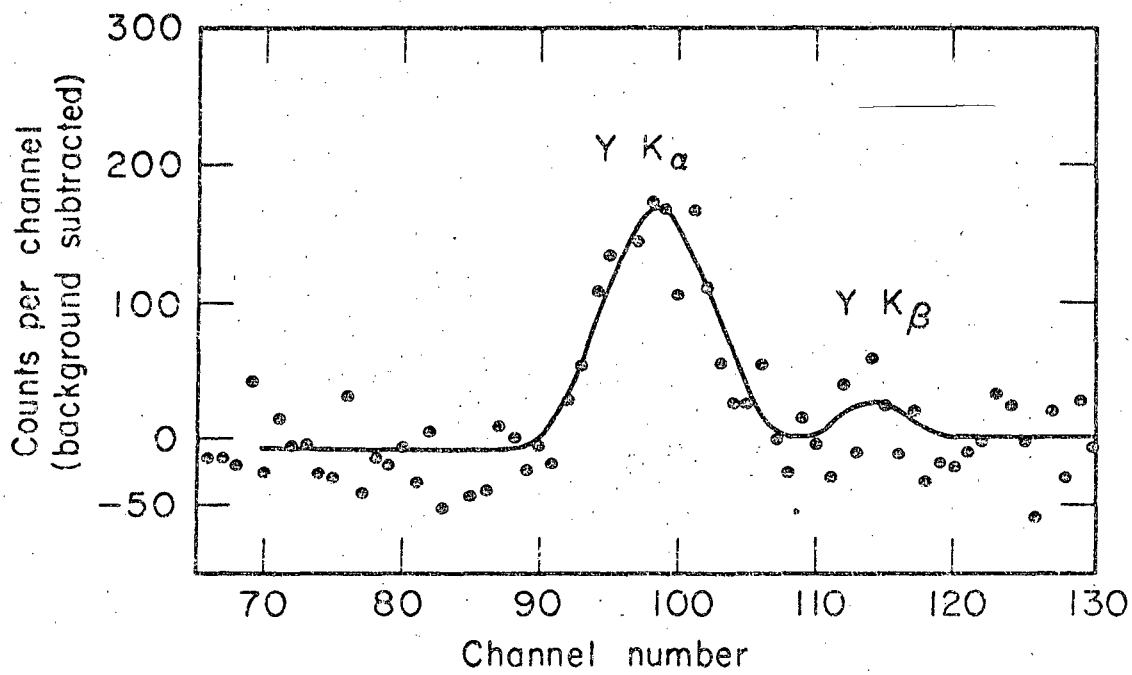

MUB-13506

Fig. 3

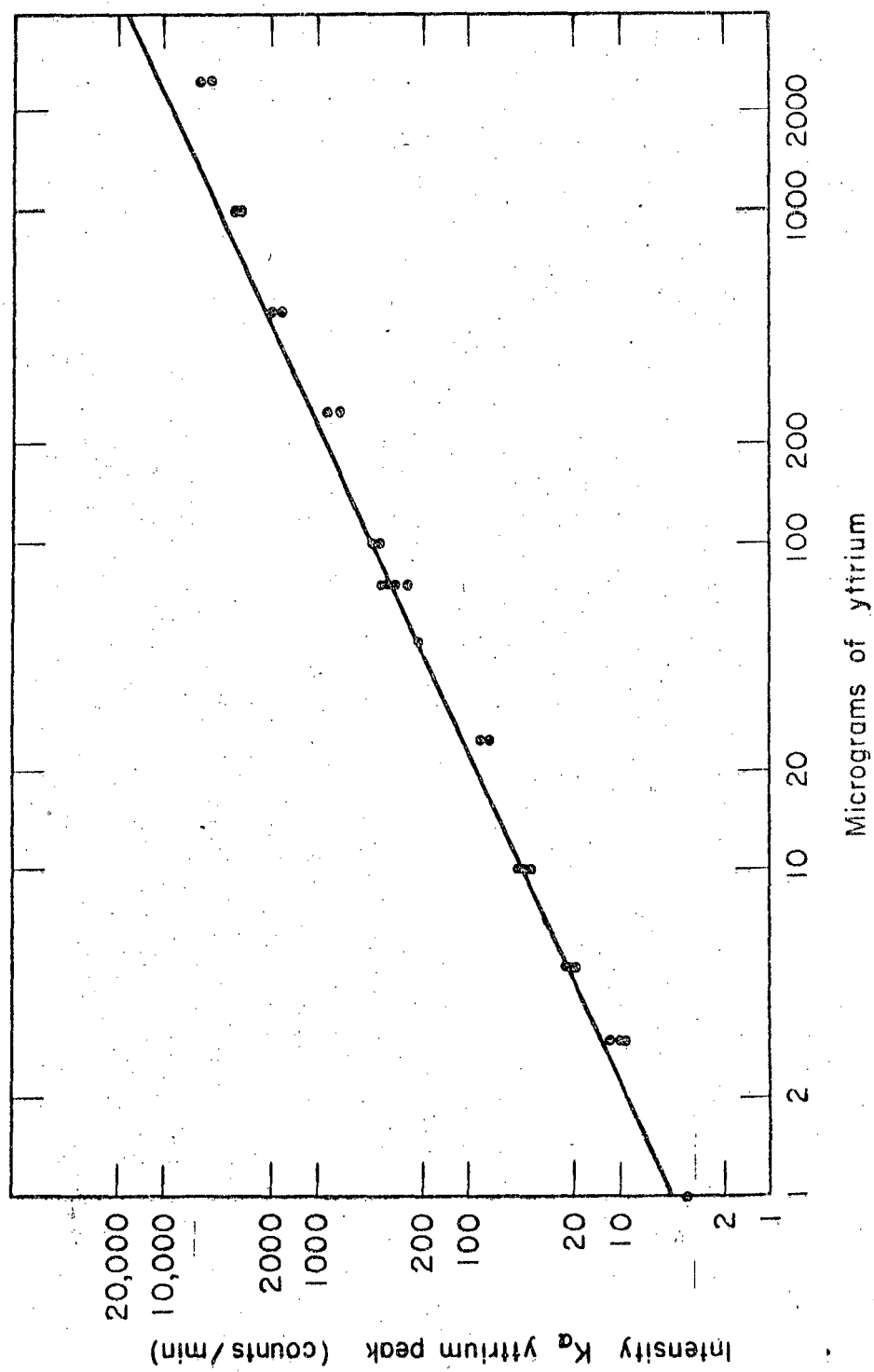

MUB-13507

Fig. 4

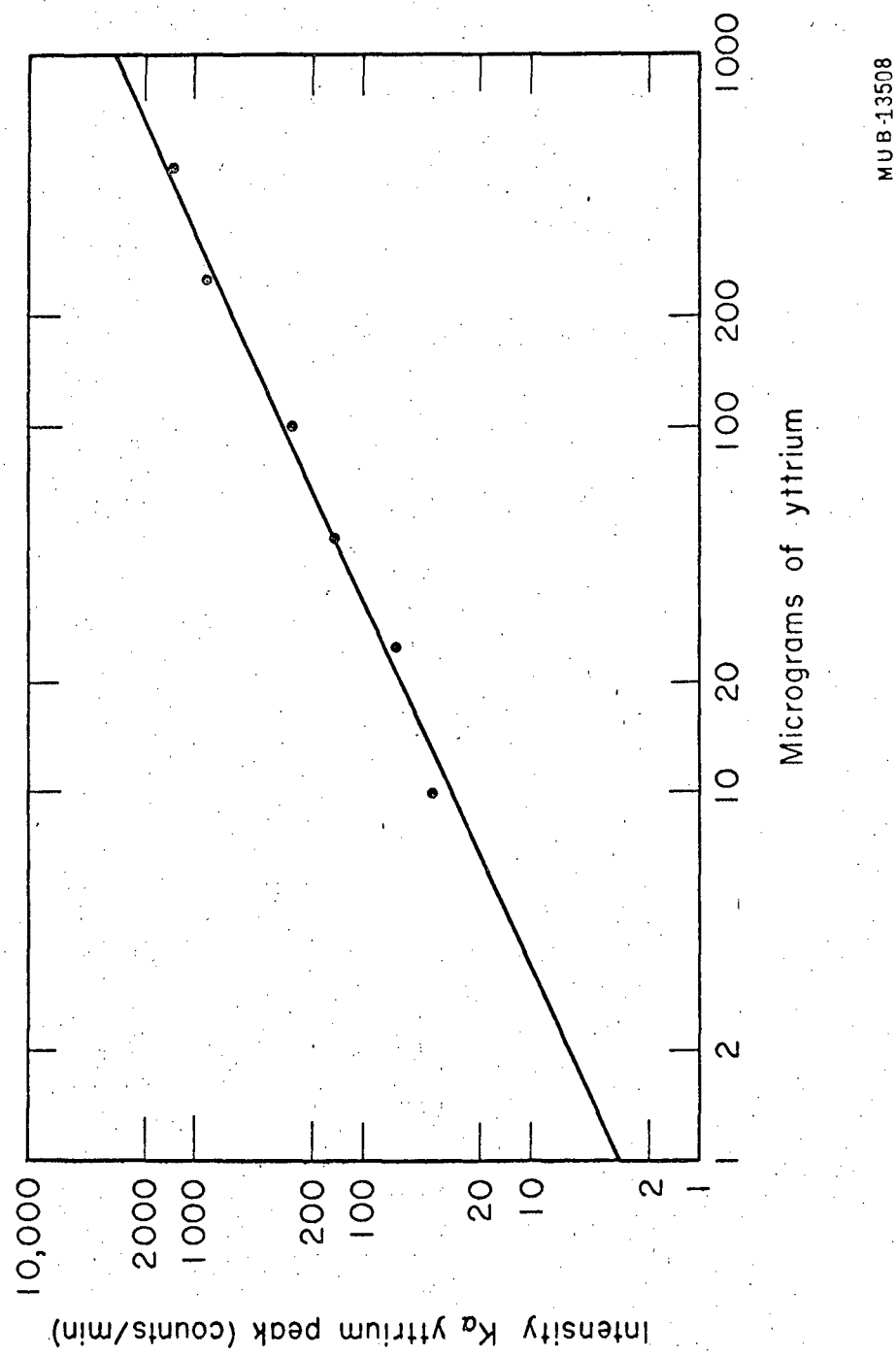
Intensity Kα yttrium peak (counts/min)
10,000
2000
1000
200
100
20
10
2
1
2
10
20
100
200
1000
Micrograms of yttrium
MUB-13508

Fig. 5

This report was prepared as an account of Government sponsored work. Neither the United States, nor the Commission, nor any person acting on behalf of the Commission:

A. Makes any warranty or representation, expressed or implied, with respect to the accuracy, completeness, or usefulness of the information contained in this report, or that the use of any information, apparatus, method, or process disclosed in this report may not infringe privately owned rights; or

B. Assumes any liabilities with respect to the use of, or for damages resulting from the use of any information, apparatus, method, or process disclosed in this report.

As used in the above, "person acting on behalf of the Commission" includes any employee or contractor of the Commission, or employee of such contractor, to the extent that such employee or contractor of the Commission, or employee of such contractor prepares, disseminates, or provides access to, any information pursuant to his employment or contract with the Commission, or his employment with such contractor.