UCRL-17177 Rev.

cy. 2

University of California

Ernest O. Lawrence Radiation Laboratory

DETERMINATION OF NEUTRAL-ATOM DENSITY
IN A HIGHLY IONIZED DECAYING HYDROGEN PLASMA

Peter R. Forman and Wulf B. Kunkel

November 14, 1967

RECEIVED
LAWRENCE
RADIATION LABORA
LIBRARY AN
DOCUMENTS SEC

TWO-WEEK LOAN COPY

This is a Library Circulating Copy which may be borrowed for two weeks. For a personal retention copy, call Tech. Info. Division, Ext. 5545

UCRL-17177 Rev.
cy. 2

DISCLAIMER

This document was prepared as an account of work sponsored by the United States Government. While this document is believed to contain correct information, neither the United States Government nor any agency thereof, nor the Regents of the University of California, nor any of their employees, makes any warranty, express or implied, or assumes any legal responsibility for the accuracy, completeness, or usefulness of any information, apparatus, product, or process disclosed, or represents that its use would not infringe privately owned rights. Reference herein to any specific commercial product, process, or service by its trade name, trademark, manufacturer, or otherwise, does not necessarily constitute or imply its endorsement, recommendation, or favoring by the United States Government or any agency thereof, or the Regents of the University of California. The views and opinions of authors expressed herein do not necessarily state or reflect those of the United States Government or any agency thereof or the Regents of the University of California.

Submitted to Physics of Fluids

UCRL-17177 Rev.
Preprint

UNIVERSITY OF CALIFORNIA

Lawrence Radiation Laboratory
Berkeley, California

AEC Contract No. W-7405-eng-48

DETERMINATION OF NEUTRAL-ATOM DENSITY IN A HIGHLY IONIZED DECAYING HYDROGEN PLASMA

Peter R. Forman and Wulf B. Kunkel

November 14, 1967

DETERMINATION OF NEUTRAL-ATOM DENSITY IN A HIGHLY IONIZED DECAYING HYDROGEN PLASMA*

Peter R. Forman† and Wulf B. Kunkel

Lawrence Radiation Laboratory
University of California
Berkeley, California

November 14, 1967

ABSTRACT

A photoabsorption technique in the vacuum ultraviolet region is used to measure the density of atomic hydrogen in a decaying, highly ionized hydrogen plasma as a function of time and position. The plasma is formed in a metal cylinder with a strong axial magnetic field by a powerful pulsed cross-field discharge that takes the form of an axially propagating ionization front. It is found that during the discharge a fraction of the gas is driven to the boundaries, forming there a layer of increased neutral density which later relaxes by diffusion back into the plasma. In the interior, the plasma is initially highly ionized and the atom density builds up as the ion density decreases. The rate is consistent with predictions based on the collisional-radiative recombination model.

I. INTRODUCTION

In a large class of plasma experiments the ionization is produced by powerful electric discharges through gases at a low pressure that originally fill the chamber in question with a uniform gas density. For quantitative work the ion or electron density and temperature are then usually determined by one or perhaps several of the nowadays standard techniques developed for this purpose. If the degree of ionization is

of interest it is then often determined in an indirect manner. Under steady-state conditions it can, for instance, sometimes be inferred from a pressure balance condition. In all nonsteady cases, however, and in particular in the transient plasmas formed by the very popular condenser discharges, no such arguments apply, and the density of un-ionized gas must really be considered as an unknown. It has become customary to make certain simplifying assumptions or guesses. For instance, it is often argued that in pinch discharges the neutral gas is swept along with the plasma, whereas in other cases it is frequently assumed that the total mass density remains uniform throughout the volume. Obviously, neither of these extreme assumptions is necessarily justified. On the contrary, under some conditions it is more realistic to argue that local thermodynamic equilibrium must be approached so that the neutral density can be computed from a knowledge of electron density and temperature regardless of the initial gas content of the discharge volume. This latter conclusion was arrived at, for instance, in a previous study of a decaying highly ionized hydrogen plasma.[1]

In this paper we report on an investigation undertaken to verify the earlier conclusion in a straightforward manner, i.e., by a determination of the neutral atom density as well as of the other parameters. Details of the electron density and temperature measurements are published elsewhere and are not discussed here.[2] The unique feature of this experiment is the direct determination of the atomic hydrogen density. This was accomplished by means of a photoabsorption measurement.

II. PHOTOABSORPTION TECHNIQUE

If a photon, of wave length less than 912 Å, is incident upon a hydrogen atom there is a finite probability that it will photoionize the atom. The cross section for such a process is well known,[3] and may be expressed by

$$\sigma(n,\lambda) = \bar{g}\,\frac{64\pi^2 e^{10} m_e}{3\sqrt{3}\,ch^6}\,\frac{\lambda^3}{n^5} \qquad \text{for } \lambda \leqslant 912\ \text{Å}, \tag{1}$$

where n is the principal quantum number and $\bar{g}$ is a Gaunt factor averaged over angular momentum states; $\bar{g}$ is of the order of 1. For n = 1 at threshold λ = 912 Å the value is $\sigma = 6.3 \times 10^{-18}$ cm^2.

For the electron temperatures and densities present ($7500^\circ K < T_e < 20\,000^\circ K$) $\left[1 \times 10^{15} < N_e < 5 \times 10^{15}\right]$ the absorption due to all the excited states plus the absorption due to H^- and H_2^+ ions and that of inverse bremsstrahlung is expected to be insignificant in comparison with the absorption due to the ground-state hydrogen atoms.

The photoabsorption coefficient for molecular hydrogen is not appreciable if the wavelength of the incident photon is longer than 860 Å.[4] In order to avoid absorption by molecular hydrogen, a light source was developed that produced, in this region of the spectrum, light predominantly of wavelength 890.8 Å. This light arose from the $5^2P^0_{1/2}$ $7^2S_{1/2}$ transition of indium III. The light source was a triggered vacuum spark with a slug of indium imbedded in one of the carbon electrodes.

The intensity of a beam of light, of frequency interval $d\nu$ passing through a plasma containing hydrogen atoms, obeys Lambert's Law,

$$I(\nu)d\nu = I_0(\nu)\,\exp\left[-K_\nu \int_0^L N(x)dx\right] d\nu, \tag{2}$$

where N(x) is the atomic density distribution along the length of the plasma, and L is the length of the plasma.

The signal received by a detector is an integral over some frequency interval. Because the photoionization cross section is a slowly varying function of frequency and the band pass of a monochromator is narrow, or the source used has a narrow spectrum, the light can be considered to be monochromatic.

The atomic density distribution along the length of the machine may be divided into (a) some distribution at the ends, and (b) the distribution throughout the length of the cylinder. Equation (2) then becomes

$$\int_0^{L_0} N_1(x)dx + \int_{L_0}^{L} N_2(x)dx = \frac{1}{K_{\nu_0}} \ln \frac{I_0}{I} = \frac{1}{K_{\nu_0}} \ln R, \qquad (3)$$

where L_0 represents some dividing point. If, then, two measurements are made with different cylinder lengths, and it is assumed that the plasma decays in the same fashion--in particular that the end effects develop in the same way--the difference of the two measurements yields

$$\int_{L_1}^{L_2} N_2(x)dx = \frac{1}{K_{\nu_0}} \ln \frac{R_2}{R_1}$$

or

$$\langle N_2 \rangle = \frac{1}{K_{\nu_0}\left[L_2 - L_1\right]} \ln \frac{R_2}{R_1} . \qquad (4)$$

III. EXPERIMENT

The experimental device used to produce the plasma has been extensively described in a number of publications.[1,2,5] The following description is intended only as a guide to the reader and to update the description to include the few minor changes required to perform the vacuum uv work.

A hydrogen plasma is produced in a copper cylinder, 14.6 cm in diameter, closed at one end by a quartz end plate and at the other by a movable copper plate. To assure good electrical contact of the copper plate with the cylinder wall, it was fitted with finger stock around its circumference. This movable copper plate or "plug" was one of the necessary modifications of the basic machine. The maximum length of the machine is 86.4 cm. The plasma chamber is inside a solenoid that produces a uniform dc magnetic field of 16 kG.

A base pressure of 2×10^{-5} torr is maintained in the tube. While the experiment is in progress, hydrogen gas flows through the tube at a pressure of 0.085 torr. While the plasma chamber is kept at this pressure two 6-in. (silicone oil) diffusion pumps maintain differential pumping sections at a pressure of 2×10^{-5} torr, the pressure drop being across 1/16-in.-diam holes in the end plates. These two differential pumping sections were the other necessary modification to the basic machine described in previous publications.

A lumped-constant pulse line initially charged to 10 kV is connected by an ignitron switch to the 5-cm-long, 5-cm-diam cylindrical molybdenum electrode which is mounted in the center of the quartz plate. When the ignitron is fired, the gas breaks down and a current of 6.5 kA flows

between the electrode and the tube wall. The molybdenum electrode is the anode. This radial current crossed with the uniform axial magnetic field exerts an azimuthal body force on the plasma, causing it to rotate. This rotation produces a back emf, forcing the current to flow in the un-ionized region ahead of the rotating plasma. In this way a "hydromagnetic ionizing wave" is produced which has been investigated theoretically by Kunkel and Gross[6] and by Taussig.[7]

If the current is allowed to continue flowing after this front has reached the far end of the tube, prominent spectral lines of impurities appear; therefore, the driving current is "corwbarred," i.e., the molybdenum electrode is shorted to the cylinder wall just as the ionizing wave reaches the far end. This crowbarring forces the plasma to stop rotating. After about 30 μsec, for the full-length tube, the rotational energy has disappeared and the plasma begins to decay.

Figure 1 is a schematic drawing of the arrangement that was used in this experiment. Light emanating from the source passes through the 1/16-in. hole in the quartz end plate. After traversing the plasma it exits through the 1/16-in. hole in the movable copper end plate and is incident upon the entrance slits of the vacuum monochromator.

A thin coating of sodium salicylate was used in conjunction with an EMI 9541B photomultiplier tube as the detector. The vacuum monochromator mount and the light source were constructed so that they could be translated horizontally in order to be lined up with holes at different radii.

Because of lack of reproducibility of the intensity of the light source, in addition to the failure of all attempts to monitor its output, an averaging method was adopted. A plasma was formed, by charging the

pulse line, only on alternate shots. If the pulse line is charged, an ionization front is formed, and a plasma is produced. At a time of interest, 0 to 200 μsec later, the light source is fired, and the signal emanating from the 1/16-in. hole in the copper end plate is detected. On the next firing of the machine the pulse line is not charged and no plasma is formed. The shots without plasma are called normalizing shots. Each point in Fig. 2 is the average of from 10 to 15 normalizing shots divided by the average of an equivalent number of plasma shots. The errors indicated are standard deviations. These errors are introduced predominantly by uncertainty in the intensity of the light source and in part by the plasma itself.

Absorption measurements were made at radii of 3, 5, and 7 cm. For the 3- and 5-cm measurements it was possible to vary the length of the plasma. The construction of the movable plug (copper end plate) unfortunately precluded changing the length for the 7-cm radius. The observed attenuation at this radius is very different from those at the other two during the time that the front is coming down the tube. Whereas the attenuation is constant during the first 20 to 30 μsec for the smaller-radii shots, there is an essentially linear increase in $\ln I_0/I$ for the shots near the wall. In addition the maximum absorption at the 7-cm radius was more than four times the maximum at the other radii and decreased in time rather than increased. This was interpreted as the formation of a layer of neutral atoms near the wall while the front was progressing. Therefore it was felt that it would be reasonably safe to interpret the absorption at this length as directly due to neutrals along the entire length, assuming no end effects. The ionizing front that produces the

plasma proceeds down the tube at a rate of about 5 cm per μsec. In order to make a fair comparison between the 63.5-cm data and the 86.4-cm data, the two were matched at the time when the current of short-circuited discharge went through zero. The time scale of Fig. 2 is that of the 86.4-cm data, the 63.5-cm data having had the appropriate shift.

IV. RESULTS

By the method described a direct measurement has been made of the atomic density in a dense, decaying, highly ionized hydrogen plasma. The results are summarized in Fig. 3. The initial degree of ionization in the central regions of the plasma is judged to be greater than 92%. The uncertainty in the percentage ionization is caused by the uncertainty in the atomic density measurement. It is probable that the degree of ionization is even higher, in agreement with the conclusion drawn before.[1] Note that the total density in the interior is about 20% lower than the original gas filling. In the course of the discharge a fraction of the gas is apparently forced towards the boundaries of the chamber and most of it does not return during the period of observation. Previously it had been assumed that all this material is compacted in boundary layers at the end plates, where pressure balance requires large particle densities. The new measurement, however, shows that a layer of un-ionized hydrogen atoms is deposited at the cylinder wall by the plasma-forming discharge. This layer is observed to relax in time, as can be seen in Fig. 3. The rate of this radially inward diffusion is consistent with charge exchange and ionization processes as the controlling mechanisms. Unfortunately, this new evidence does not provide us with an explanation for the unexpectedly rapid energy loss rate that has been inferred before.[1]

In the interior, the plasma is directly observed to recombine *in situ* at a rate in good agreement with the calculations by Bates, Kingston, and McWhirter,[8] i.e., diffusion losses do not have to be invoked to explain the decay.

The authors wish to thank Dr. W. S. Cooper III for his interest, good advice, and constant encouragement during the progress of this work.

FOOTNOTES AND REFERENCES

*Work done under auspices of the U. S. Atomic Energy Commission.

†Present address Los Alamos Scientific Laboratory, New Mexico.

1. W. S. Cooper III and W. B. Kunkel, Phys. Rev. 138, A4 (1965).
2. W. S. Cooper III and W. B. Kunkel, Phys. Fluids 8, 482 (1965).
3. D. R. Bates (editor), Atomic and Molecular Processes (Academic Press, New York, 1962), p. 86.
4. G. R. Gook and P. H. Metzger, J. Opt. Soc. Am. 54, 968 (1964).
5. J. M. Wilcox et al., J. Nucl. Energy: Pt. C, 4, 337 (1962).
6. W. B. Kunkel and R. A. Gross, in Plasma Hydromagnetics (Sixth Lockheed Symposium on Magnetohydrodynamics) (D. Bershader, editor) (Stanford University Press, 1962).
7. R. T. Taussig, Phys. Fluids 8, 1616 (1965).
8. D. R. Bates et al., Proc. Roy. Soc. (London) 270A, 155 (1962).

FIGURE LEGENDS

Fig. 1 Schematic drawing of the arrangement used for the vacuum uv absorption measurements.

Fig. 2 Measured absorption for the two lengths at a radius of 5 cm.

Fig. 3 Plots of the atom, ionic, and total density as a function of radius for several times. Dots indicate atom density, squares indicate ionic density.

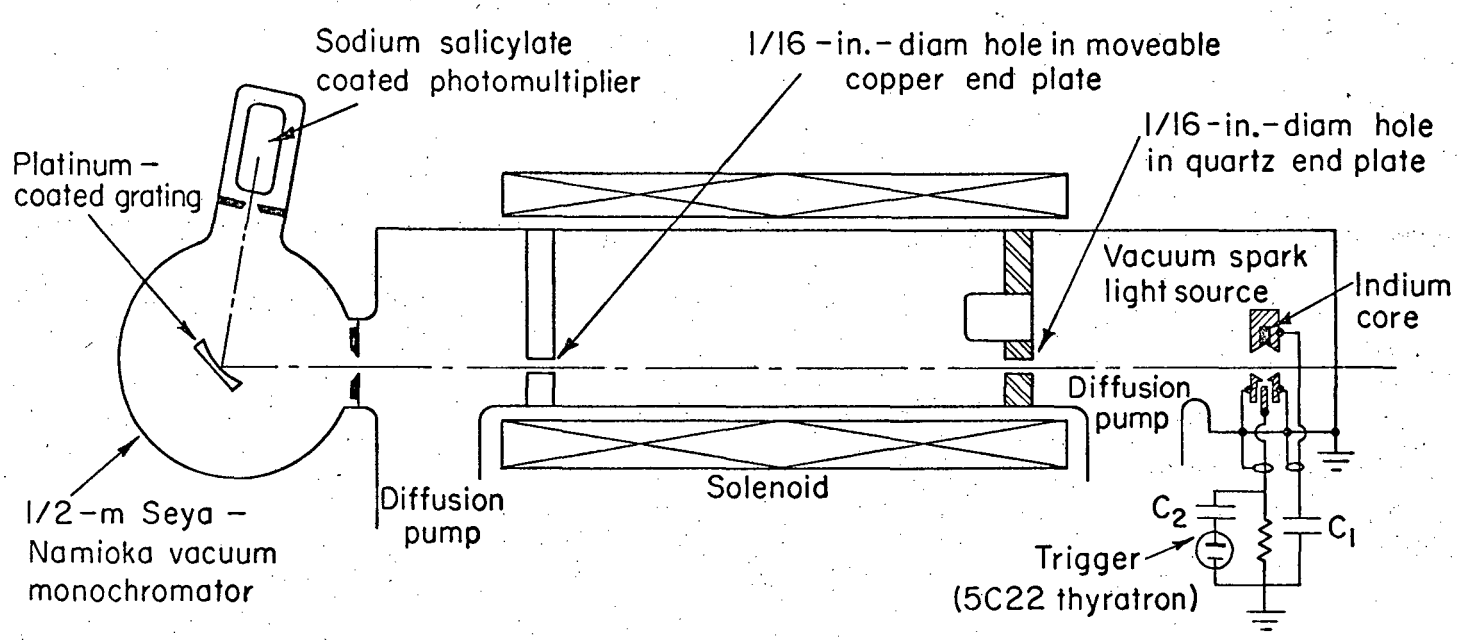

Fig. 1

MUB-12994

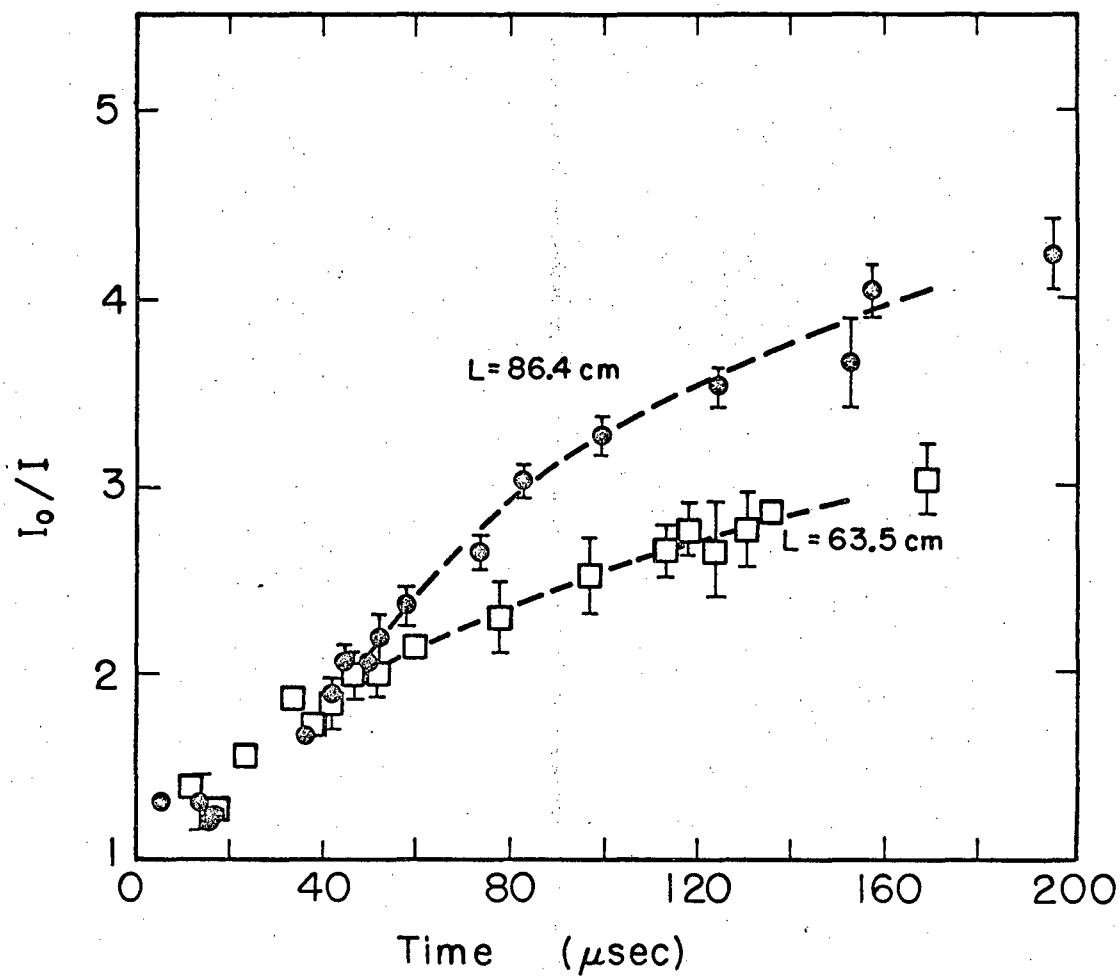

Fig. 2

MUB-13838

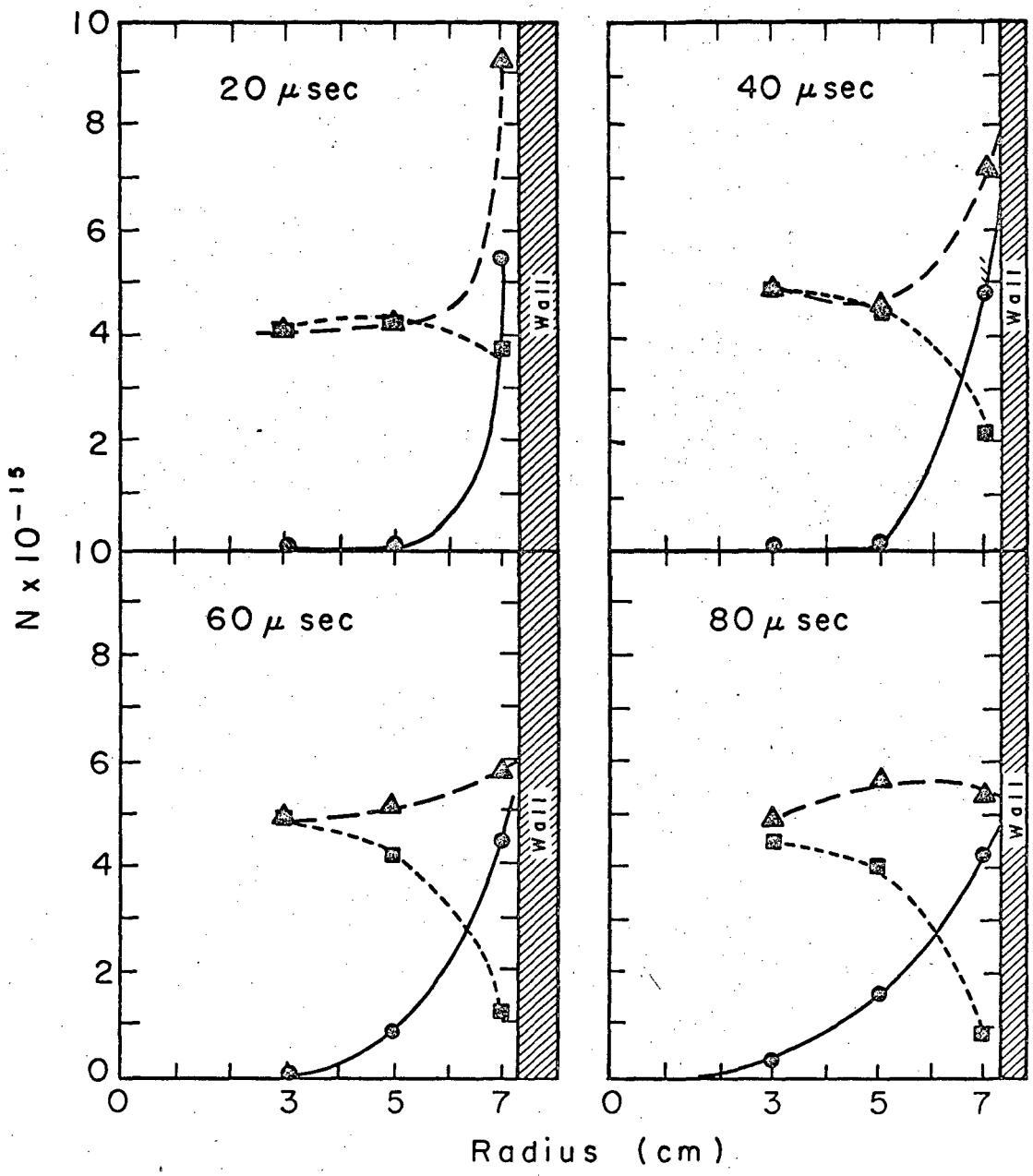

Fig. 3

MUB-13481

This report was prepared as an account of Government sponsored work. Neither the United States, nor the Commission, nor any person acting on behalf of the Commission:

A. Makes any warranty or representation, expressed or implied, with respect to the accuracy, completeness, or usefulness of the information contained in this report, or that the use of any information, apparatus, method, or process disclosed in this report may not infringe privately owned rights; or

B. Assumes any liabilities with respect to the use of, or for damages resulting from the use of any information, apparatus, method, or process disclosed in this report.

As used in the above, "person acting on behalf of the Commission" includes any employee or contractor of the Commission, or employee of such contractor, to the extent that such employee or contractor of the Commission, or employee of such contractor prepares, disseminates, or provides access to, any information pursuant to his employment or contract with the Commission, or his employment with such contractor.