UCRL-17193

University of California

Ernest O. Lawrence Radiation Laboratory

COMPARISON OF π^+ AND π^- LIFETIMES

TWO-WEEK LOAN COPY

This is a Library Circulating Copy which may be borrowed for two weeks. For a personal retention copy, call Tech. Info. Division, Ext. 5545

Berkeley, California

DISCLAIMER

This document was prepared as an account of work sponsored by the United States Government. While this document is believed to contain correct information, neither the United States Government nor any agency thereof, nor the Regents of the University of California, nor any of their employees, makes any warranty, express or implied, or assumes any legal responsibility for the accuracy, completeness, or usefulness of any information, apparatus, product, or process disclosed, or represents that its use would not infringe privately owned rights. Reference herein to any specific commercial product, process, or service by its trade name, trademark, manufacturer, or otherwise, does not necessarily constitute or imply its endorsement, recommendation, or favoring by the United States Government or any agency thereof, or the Regents of the University of California. The views and opinions of authors expressed herein do not necessarily state or reflect those of the United States Government or any agency thereof or the Regents of the University of California.

Submitted to Physical Review Letters

UCRL-17193
Preprint

UNIVERSITY OF CALIFORNIA

Lawrence Radiation Laboratory
Berkeley, California

AEC Contract No. W-7405-eng-48

COMPARISON OF π^+ AND π^- LIFETIMES

David S. Ayres, David O. Caldwell, Arthur J. Greenberg,
Robert W. Kenney, Richard J. Kurz, and Brenton F. Stearns

November 4, 1966

UCRL-17193

COMPARISON OF π^+ AND π^- LIFETIMES*

David S. Ayres, David O. Caldwell,† Arthur J. Greenberg, Robert W. Kenney, Richard J. Kurz,‡ and Brenton F. Stearns**

Lawrence Radiation Laboratory
University of California
Berkeley, California

November 4, 1966

ABSTRACT

A measurement of the difference between the π^+ and π^- lifetimes gave $(\tau_+/\tau_- -1) = 0.0056 \pm 0.0028$, while the absolute π^+ lifetime was found to be 26.6 ± 0.2 nsec.

CPT invariance is a sufficient but not a necessary condition for the equality of the total lifetimes and masses of particle and antiparticle. An experiment has been performed to check CPT invariance in weak interactions by looking for any difference between the total lifetimes of positive and negative pions. This was done in such a manner that the absolute lifetimes of both were also determined directly. The lifetimes were measured by finding the fraction of surviving pions as a function of distance in vacuum in nearly identical momentum-analyzed beams of π^+ and π^- mesons.

Pions were produced in collisions of the external proton beam of the Lawrence Radiation Laboratory's 184-in. synchrocyclotron with a 6-in.-long Be target (Fig. 1). The pion beam was momentum-analyzed by the bending magnets, M_1 and M_2, and geometrically defined by the collimator, C, five thin scintillators, S_1 to S_5, and four annular anti-coincidence scintillators, A_1 to A_4. After S_2, the entire trajectory was in vacuum except for the 36-in.-long, 2/3-atm, CO_2 Cerenkov counter located between S_4 and S_5 to veto electrons in the beam.

The counters and magnets described so far provide (1) a nearly parallel beam of small momentum spread ($\Delta p/p = \pm 0.4\%$) and (2) a monitor of the intensity of that beam. Pions were actually selected by a differential, liquid-hydrogen Cerenkov counter which was positioned successively at various points along the decay path up to 17 ft past A_4 without the quadrupole Q, and with Q in place, up to 36 ft beyond its exit end. Hydrogen was used because operation at cyclotron momenta required a refractive index of about 1.1, and multiple scattering had to

to be kept to a minimum. In the counter[1] (Fig. 2), 11-deg Cerenkov light from paraxial particles is focused by the quartz doublet onto a ring aperture. In order to reject particles with off-angle trajectories, such as δ-rays or decay muons, more efficiently, the ring aperture is surrounded by an anticoincidence ring. The angular resolution of the counter was ± 3 deg, while the velocity resolution ($\Delta\beta/\beta$) was ±0.005. The desired pions had $\beta = 0.912$, muons in the beam had $\beta = 0.947$, and muons from the decay of pions had a range of velocities including $\beta = 0.912$. However, these decay muons were emitted at 7 deg with respect to the beam direction, and hence were rejected.

Complete separation of pions from decay muons is important for correct absolute lifetimes, although it should make no difference in establishing the equality of π^+ and π^- lifetimes. It is important, however, to ascertain (a) that there is no change in the nature of the monitor counts with time, and that there are no important differences between π^+ and π^- with respect to (b) beam geometry, (c) momentum, and (d) Cerenkov counter response with distance. These items are now discussed in order.

A. Monitor

Although it is not necessary that monitor counts, $S_1S_2S_3S_4S_5\bar{A}_e\bar{A}_1\bar{A}_2\bar{A}_3\bar{A}_4$, arise from pions alone, it is important that the fraction due to pions not change, or at least (for relative measurements) that changes be the same for the positive and negative beams. Since the fraction of electrons did change when the proton beam wandered across the Be target, an electron veto counter (of 95% efficiency) was

installed, and a split ion chamber was placed in front of the target to permit controlling the proton-beam position to better than 1 mm. These kept changes in the fraction of electrons to <0.1% for the negative beam and <0.02% for the positive. The muon contamination at counter A_4, as determined from integral range curves in Cu, was 6% for both polarities.

Fluctuations in the data could be caused by accidental coincidences, as well as by changes in beam composition. The low monitor counting rate helped make the effect of accidentals unimportant. The positive flux averaged 35/sec, while the negative beam averaged 7/sec, the difference stemming from the quite different production cross sections. The only significant accidental coincidence rate, caused by particles getting by the edge of S_3 in coincidence with random counts in S_3, gave a mean fraction of 0.0028 for positives and 0.0023 for negatives. The constancy of these rates with time made it unnecessary to correct for them in the monitor counts. There were no measurable accidentals in the pion counts (monitor-Cerenkov coincidences).

The fraction of monitor counts per $S_1S_2S_3\overline{A}_1$ coincidence, the fraction of electrons vetoed, and the fraction of accidentals were all monitored continuously. The distribution of each of these quantities for the 1200 individual readouts was Gaussian with the expected variance. Thus there was no indication of systematic fluctuations in the monitor system.

B. Beam Geometry

Detailed beam profiles, as shown in Fig. 3, were taken with a digitized spark chamber[2] at all positions along the beam trajectory at which data were obtained, in order to be certain that the beam was sufficiently well contained and that the positive and negative beams were similar. The beams were nearly identical in shape but their centers became gradually displaced along the decay path because of the small (~3 gauss) stray cyclotron field. The centering and containment of the beam was also checked at each position by taking counts with the Cerenkov counter moved off center horizontally and vertically. In addition, the angular alignment with respect to the beam axis was tested by rotating the counter in the horizontal and vertical planes. A substantial fraction of the data-gathering time was spent in this type of check.

That no evidence was found for particles outside the expected beam area may be attributed to having three final anticoincidence counters, $\overline{A}_2$ to $\overline{A}_4$, and to having very little scattering material in the beam. The S counters were only 0.025-in. thick, there was no edge wrapping on the A counters because they were in a vacuum, and there were no windows between the electron veto counter and the moveable Cerenkov counter. It is worth noting that because of the larger π^+ cross section, such scattering would make the π^- lifetime appear longer.

C. Momentum

The field at the position of the gaussmeter in each of the magnets M_1 and M_2 was held constant and the same for both polarities to within

0.1%. In the data reported here there were 125 π^+-π^--π^+ sequences, so that any errors in field settings tended to average out. While fields in the beam-transport magnets were reversed in order to change polarity, the stray magnetic field from the cyclotron was constant. From measurements of that field it is estimated that this could have accounted for a momentum difference of at most 0.1%.

Several methods were used to check for a momentum difference. A time-of-flight measurement assured equality only to about 1%. A range measurement gave $(\langle p_+\rangle/\langle p_-\rangle -1) = -0.002 \pm 0.004$. The most accurate determination of the relative mean momenta was provided by measuring for each sign of particle the efficiency of the Cerenkov counter as a function of beam momentum, which was varied by changing the fields in M_1 and M_2. The resulting steep-sided curves, which were a fold of beam momentum spread and counter response, matched closely and gave $(\langle p_+\rangle/\langle p_-\rangle -1) = 0.001 \pm 0.001$. Another momentum comparison was made at the end of the experiment by bending the beams through 78 deg with an analyzing magnet placed after counter A_4. This field was monitored by a nuclear-magnetic-resonance probe throughout both the momentum analysis and an extensive field mapping. The entrance and exit beam trajectories were determined by profiles taken with the digitized spark chamber at six positions. The vacuum system was extended at each position so that no multiple-scattering material was placed in the beam. The positive and negative profiles were taken alternately, and their centroids and shapes were determined with high accuracy, as shown in Fig. 3, permitting a good relative momentum determination, $(\langle p_+\rangle/\langle p_-\rangle -1) \doteq -0.002 \pm 0.001$. Since the chamber

positions were not known with comparable accuracy, the absolute momentum, 311.2 ± 1.0 MeV/c, was determined much less precisely. The full momentum width at half maximum of both beams was 2.5 MeV/c. As an average in determining lifetime ratios, we have used $(\langle p_+\rangle/\langle p_-\rangle - 1) = -0.0005 \pm 0.0007$.

D. Cerenkov Counter Response

It is an important feature of our method that the efficiency of the moveable Cerenkov counter neither has to be known nor does it have to be the same for π^+ and π^-. For absolute lifetime measurements the efficiency must not change over one sequence of counter positions. However, for the lifetime difference it is required only that the efficiency, if it changes, do so approximately linearly over the time required for one π^+-π^--π^+ sequence (about 3 hours). In the data reported here,[3] the order of the ten positions along the beam was shuffled, and two or more π^+-π^--π^+ sequences were taken at each position.

If the counter had a velocity response which was different for π^+ and π^-, this could produce an apparent lifetime difference. Such a systematic effect might occur because of the difference in π^+ and π^- interactions in hydrogen and their momentum dependence near the 3/2-3/2 resonance. Calculations show this effect to be negligible, and the measured equality of the momentum response of the counter to positive and negative beams limits such an effect to 0.1% of the lifetime ratio.

Two difficulties arose in the counter operation. First, despite its being in vacuum, condensation accumulated slowly on the outer surface of the sapphire window, which was at 20°K. After about 24

hours of operation, there was enough scattering of Cerenkov light into the anticoincidence ring to decrease the counter efficiency by about 1%. The counting rate in the ring aperture without anticoincidence was not changed.

The second difficulty was that the counter had an efficiency of 0.6% for both π^+ and π^- without liquid hydrogen. The source of counter-empty counts might have been light produced in the window by weak scintillation of the sapphire or by scattering from surface imperfections of Cerenkov radiation which should have been trapped in the window by total internal reflection. Range measurements, beam profiles, and attenuation with distance measurements all indicated that this counting rate was simply a constant fraction of the counter-full rate, and hence the correction for this effect is negligible. Another possible consequence of light from the window was the appearance of long tails on the measured distribution of counter response as a function of momentum.

The data, based on 12×10^6 π^+ and 6×10^6 π^-, were analyzed in two ways, both utilizing the measured quantities

$$\frac{\pi^{\pm} \text{ counts at position } x}{\text{monitor counts}} \equiv R_{\pm}(x) = \epsilon_{\pm} f_{\pm} \exp\left[-\left(\frac{mc}{p\tau}\right)_{\pm} x\right],$$

where $\epsilon_{\pm}$ is the moveable-Cerenkov-counter efficiency for $\pi^{\pm}$, $f_{\pm}$ is the fraction of $\pi^{\pm}$ in the beam at $x = 0$, and m, p, and τ are the mass, momentum, and lifetime of the pion. In the first method, the slope of a least-squares, straight-line fit to

$$\ln R_{\pm}(x) = \ln(\epsilon_{\pm} f_{\pm}) - \left(\frac{mc}{p\tau}\right)_{\pm} x \qquad (1)$$

gave the $\pi^{\pm}$ absolute lifetimes, it being required only that the (unnecessary) value of $\epsilon_{\pm} f_{\pm}$ be constant over one series of counter positions. In the second method, the slope of a straight-line fit to

$$\ln \frac{R_+(x)}{R_-(x)} = \ln \frac{\epsilon_+ f_+}{\epsilon_- f_-} - \left[\left(\frac{mc}{p\tau}\right)_+ - \left(\frac{mc}{p\tau}\right)_-\right] x \qquad (2)$$

is simply related to the lifetime difference, $(\tau_+/\tau_- - 1)$. Since $R_+(x)/R_-(x)$ is formed for each π^+-π^--π^+ sequence, any changes in $\epsilon_{\pm} f_{\pm}$ that are approximately linear over each sequence will still keep $\epsilon_+ f_+/\epsilon_- f_-$ constant.

Both analyses were done with and without the anticoincidence ring of the Cerenkov counter, and the values obtained for lifetime differences are in good agreement. Only the first method with the anticoincidence ring yields absolute lifetimes. Since the absolute-lifetime analysis is affected by variations of Cerenkov counter efficiency due to condensation on the sapphire window, no data were used for which the counter had been filled with liquid hydrogen for more than 12 hours.

The relative lifetime analysis is shown in Table I. Note that data taken with the quadrupole (Q) out (0.04 - 0.23 mean lifetime) indicate $\tau_- > \tau_+$, but when these are fitted together with the Q-in data (0.20 - 0.78 lifetime) one gets $\tau_+ > \tau_-$ by a greater amount than is the case for the Q-in data by itself. The Q-in data were collected over 3 months with more than 100 π^+-π^--π^+ sequences and 7 positions, whereas the Q-out data were taken in 3 days at the end of the experiment, utilizing 18 sequences and 3 positions under significantly altered beam

conditions. Thus our most reliable estimate of the lifetime difference, shown in Table II, is that given by the Q-in data alone analyzed by the relative method (2) with the anticoincidence ring. The standard deviation given there includes the relative momentum error, while the statistical and consistency errors are the same, since χ^2 per degree of freedom is 1.0 for over 100 data points. As a check on data consistency over a longer period, the absolute lifetime analysis using Eq. (1) with the anticoincidence ring gives $(\tau_+/\tau_- -1) = 0.0030 \pm 0.0031$ over the same distance (0.20 - 0.78 lifetime). The corresponding value for the π^+ lifetime is also shown in Table II with a standard deviation that includes statistical and consistency errors as well as that in the absolute momentum. The latter result is in fair agreement with one of the two recent accurate determinations of τ_+, but not with the other.

As shown in Table II, the comparison of π^+ and π^- lifetimes agrees with the other two contemporaneous experiments.[4,5] The three experiments utilized quite different methods, and we should like to emphasize that the present experiment requires no corrections except for the very small one for a difference in the momenta. Using the same method with improved beam and counters, the experiment will be repeated shortly with greater precision.

We wish to thank James Vale and the cyclotron personnel for assistance with the apparatus and for giving us such stable operating conditions, E. F. McLaughlin and R. V. Schafer for cryogenic design of the hydrogen Cerenkov counter, H. Weisberg for assistance with the digitized spark chamber, G. R. Farrar for aid in the analysis, and A. C. Helmholz and B. J. Moyer for support and

encouragement. Particularly we want to thank R. D. Eandi and B. MacDonald for the extensive help they gave with the apparatus and in the early running of the experiment.

FOOTNOTES AND REFERENCES

*Supported by the U. S. Atomic Energy Commission.

†Also Department of Physics, University of California, Santa Barbara, California.

‡Present address: NASA Goddard Space Flight Center, Greenbelt, Maryland.

**Also Department of Physics, Tufts University, Medford, Massachusetts.

1. The optical system is the same as that described by D. A. Hill, D. O. Caldwell, D. H. Frisch, L. S. Osborne, D. M. Ritson, and R. A. Schluter, Rev. Sci. Instr. 32, 111 (1961). Further details of this counter are given by D. O. Caldwell, R. W. Kenney, E. F. McLaughlin, W. L. Pope, R. V. Schafer, and B. F. Stearns, presented at the 1966 International Conference on Instrumentation for High Energy Physics, Stanford; Lawrence Radiation Laboratory report UCRL-17129, November 1966.

2. H. Weisberg and V. Perez-Mendez, Lawrence Radiation Laboratory Report UCRL-16704, February 15, 1966 and Nucl. Instr. and Methods (to be published).

3. Data reported by D. S. Ayres, R. D. Eandi, A. J. Greenberg, R. W. Kenney, R. J. Kurz, B. MacDonald, in Proceedings of the Williamsburg Conference on Intermediate Energy Physics, February 10-12, 1966, (College of William and Mary, Williamsburg, Va., 1966), Vol. 1, p. 419 are not included here, although the results are quite similar, because counter A_e was not installed. Data reported by R. J. Kurz, D. S. Ayres, R. D. Eandi, A. J. Greenberg, R. W. Kenney, B. MacDonald, D. O. Caldwell,

and B. F. Stearns, Bull. Am. Phys. Soc. 11, 309 (1966) include only a small part of the data used here.

4. M. Bardon, U. Dore, D. Dorfan, M. Krieger, L. Lederman, and E. Schwarz, Phys. Rev. Letters 16, 775 (1966).

5. F. Lobkowicz, A. C. Melissinos, Y. Nagashima, S. Tewksbury, H. von Briesen, Jr., and J. D. Fox, Phys. Rev. Letters 17, 548 (1966). The two values given for lifetime difference arise from different methods of averaging the data.

Table I. π^+/π^- lifetime ratio analysis.

Data selection	Distance range (mean lifetimes)	$\tau_+/\tau_- - 1$	
		No anticoincidence ring	With anticoincidence ring
All	0.04 - 0.78	0.0070 ± 0.0023	0.0074 ± 0.0025
Quad. out	0.04 - 0.23	-0.015 ± 0.009	-0.024 ± 0.016
Quad. in	0.20 - 0.78	0.0058 ± 0.0024	0.0056 ± 0.0028

Table II. Comparison of π^+ lifetime values and π^+/π^- lifetime ratios in recent experiments.

Reference	τ_+ (nsec)	$\tau_+/\tau_- - 1$
Ashkin et al.[a]	25.46 ± 0.32	----
Eckhouse et al.[b]	26.02 ± 0.04	----
Kinsey et al.[c]	26.40 ± 0.08	----
Bardon et al.[4]	25.6 ± 0.3	0.0040 ± 0.007
Lobkowicz et al.[5]	26.67 ± 0.24	{0.0040 ± 0.0018 0.0023 ± 0.0040
This experiment	26.6 ± 0.2	0.0056 ± 0.0028

a. J. Ashkin, T. Fazzini, G. Fidecaro, Y. Goldschmidt-Clermont, N. H. Lipman, A. W. Merrison, and H. Paul, Nuovo Cimento 16, 490 (1960).

b. M. Eckhouse, R. J. Harris, Jr., W. B. Shuler, R. T. Siegel, and R. E. Welsh, Phys. Letters 19, 348 (1965). The numbers quoted differ from the published values in accordance with a communication of the authors to A. H. Rosenfeld.

c. K. F. Kinsey, F. L. Lobkowicz, and M. E. Nordberg, Jr., Phys. Rev. 144, 1132 (1966).

FIGURE LEGENDS

Fig. 1. Experimental arrangement. EPB: 732-MeV external proton beam; SIC: Split ion chamber; T: 6-in. Be target; M_1: 9- by 12-in. C magnet; C: 1-1/2-in.-diam. Pb collimator; M_2: 12- by 36-in. C magnet; Q: 16- by 32- by 16-in. quadrupole triplet; S_1 - S_5: 0.02-in.-thick scintillators; A_1 through A_4: Ring anticoincidence scintillators; A_e: 36-in.-long CO_2-gas Cerenkov counter (10 psia); LH_2C: Moveable liquid-hydrogen Cerenkov counter.

Fig. 2. Schematic drawing of the liquid-hydrogen differential Cerenkov counter. Note that the diameter of the ring focus depends on the angle of emission of the Cerenkov light (and hence the velocity of the particle), while the lateral position of the ring focus with respect to the ring aperture depends on the direction of the particle. The optically coaxial cylindrical mirror provides full efficiency across the 4-in. diameter of the radiator. LH_2: 4- by 8-in.-long liquid-hydrogen radiator; S: 1/4-in. sapphire window; M: 45-deg mirror; L_1, L_2: quartz lenses; Q: quartz vacuum window; A: ring aperture; LP: anticoincidence ring light pipes; C: coincidence photomultiplier; A_R, A_L: anticoincidence photomultipliers; CM: cylindrical mirror.

Fig. 3. Beam profiles taken with a digitized spark chamber. Data were taken in 0.1-in. intervals, but pairs of channels have been added together here for clarity. (a) Profiles at the end of the 36-ft decay path for π^+ and π^-, showing the similarity in their beam

shapes. The relative horizontal scale has been shifted to permit easier comparison. Note that the tails of the profiles, which are the same for positives and negatives, are not due to pions, since the Cerenkov counter gives no counts in those regions; (b) profiles 12 ft beyond a 78-deg bend, showing the similarity in central momentum and momentum spread for the π^+ and π^- beams.

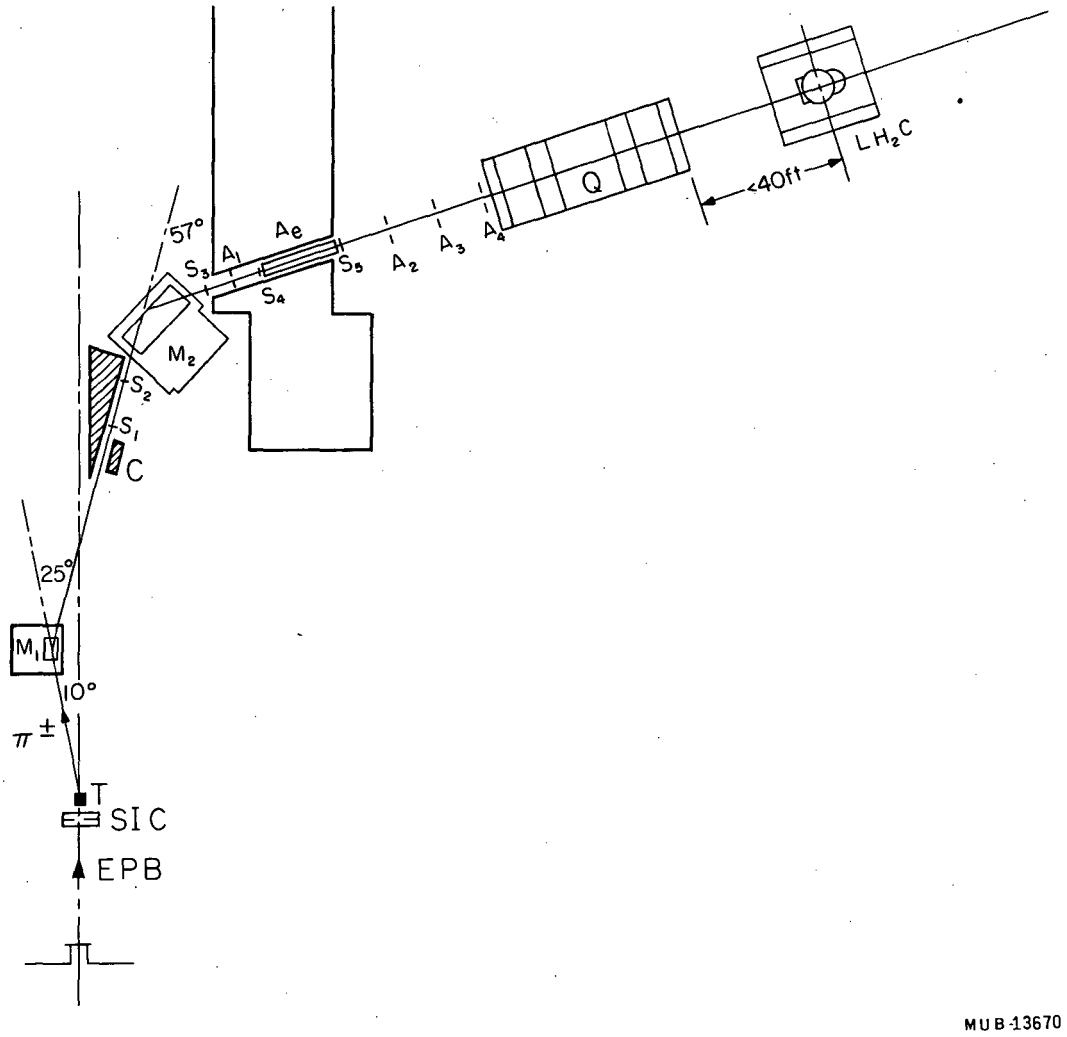
57°
Ae
A1
S3
S5
A2
A3
A4
S4
Q
<40ft
LH2C
M2
S2
S1
C
25°
M1
10°
π±
T
SIC
EPB
MUB-13670

Fig. 1

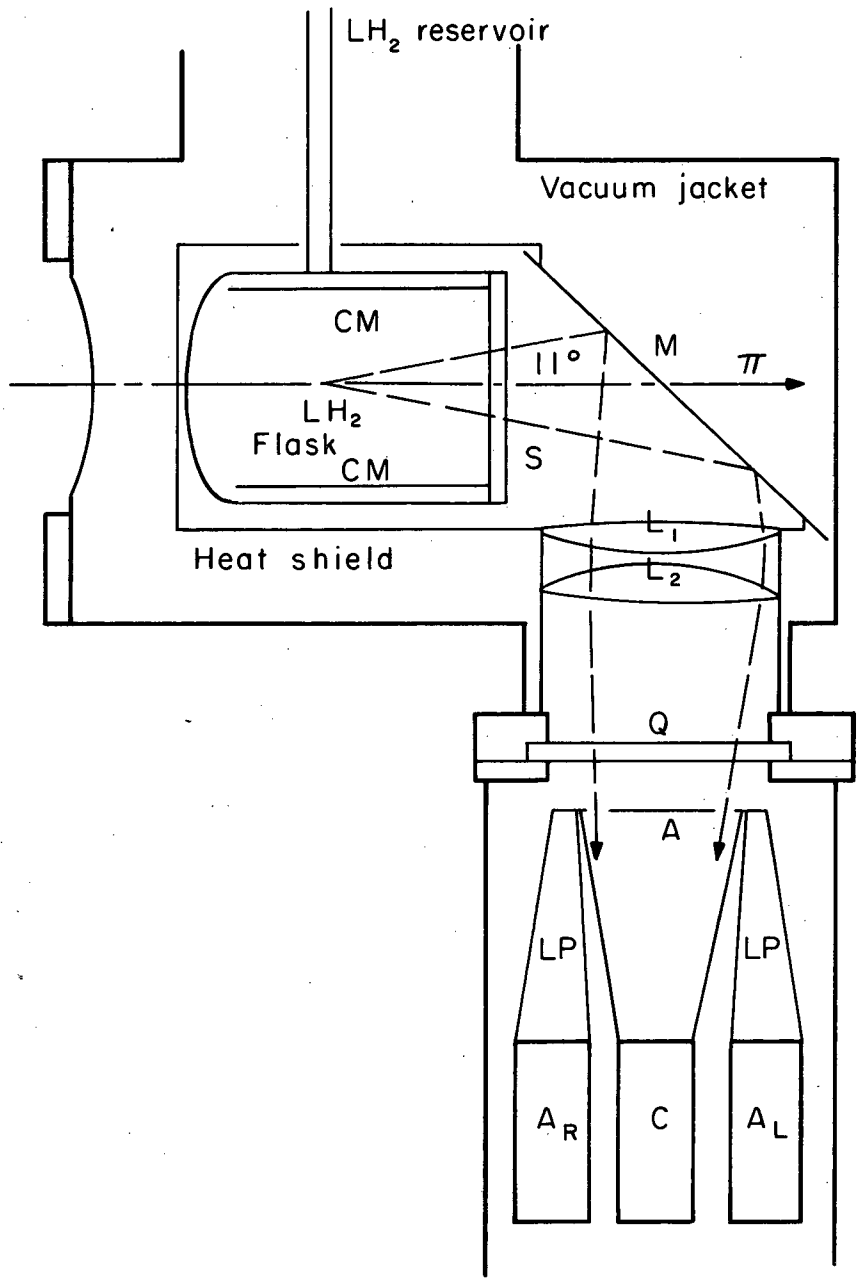

MUB-13668

Fig. 2

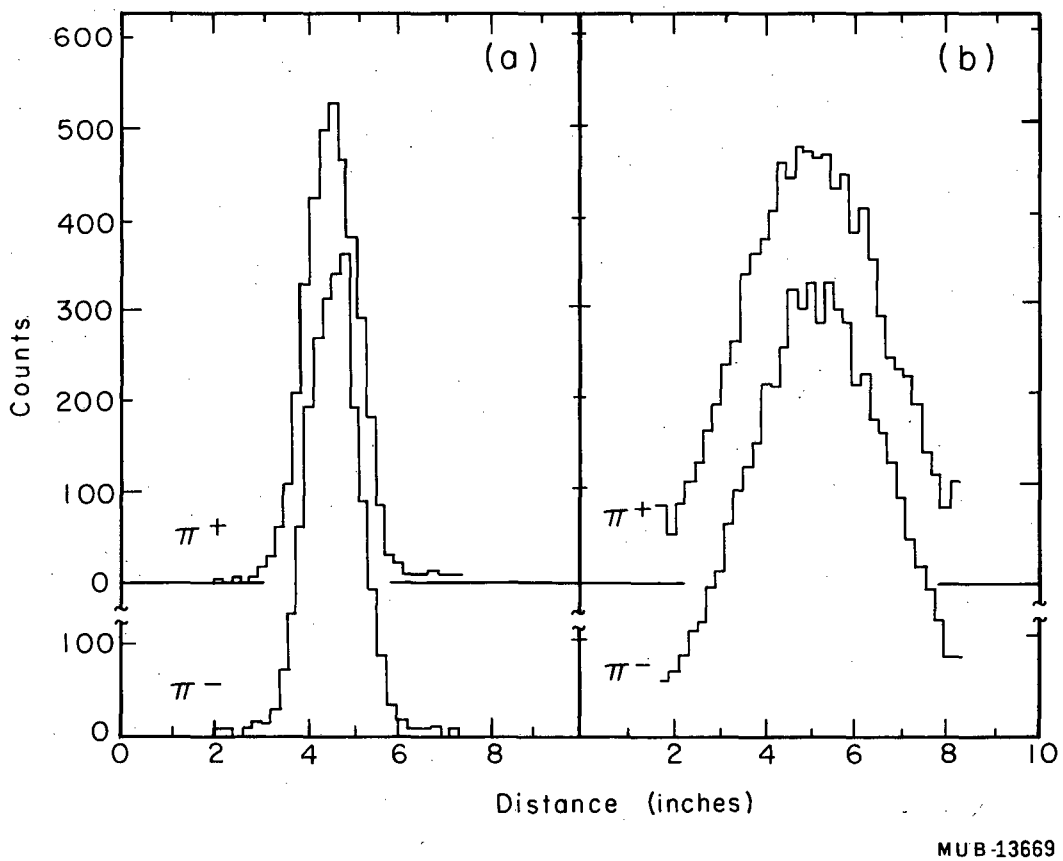
600
500
400
300
200
100
0
100
0
Counts
(a)
(b)
π^+
π^-
π^+
π^-
0
2
4
6
8
2
4
6
8
10
Distance (inches)
MUB-13669

Fig. 3

This report was prepared as an account of Government sponsored work. Neither the United States, nor the Commission, nor any person acting on behalf of the Commission:

A. Makes any warranty or representation, expressed or implied, with respect to the accuracy, completeness, or usefulness of the information contained in this report, or that the use of any information, apparatus, method, or process disclosed in this report may not infringe privately owned rights; or

B. Assumes any liabilities with respect to the use of, or for damages resulting from the use of any information, apparatus, method, or process disclosed in this report.

As used in the above, "person acting on behalf of the Commission" includes any employee or contractor of the Commission, or employee of such contractor, to the extent that such employee or contractor of the Commission, or employee of such contractor prepares, disseminates, or provides access to, any information pursuant to his employment or contract with the Commission, or his employment with such contractor.