UCRL-17194

University of California

Ernest O. Lawrence Radiation Laboratory

ALPHA DECAY OF NEUTRON DEFICIENT ASTATINE ISOTOPES

TWO-WEEK LOAN COPY

This is a Library Circulating Copy which may be borrowed for two weeks. For a personal retention copy, call Tech. Info. Division, Ext. 5545

Berkeley, California

DISCLAIMER

This document was prepared as an account of work sponsored by the United States Government. While this document is believed to contain correct information, neither the United States Government nor any agency thereof, nor the Regents of the University of California, nor any of their employees, makes any warranty, express or implied, or assumes any legal responsibility for the accuracy, completeness, or usefulness of any information, apparatus, product, or process disclosed, or represents that its use would not infringe privately owned rights. Reference herein to any specific commercial product, process, or service by its trade name, trademark, manufacturer, or otherwise, does not necessarily constitute or imply its endorsement, recommendation, or favoring by the United States Government or any agency thereof, or the Regents of the University of California. The views and opinions of authors expressed herein do not necessarily state or reflect those of the United States Government or any agency thereof or the Regents of the University of California.

Submitted to Nuclear Physics

UCRL-17194
Preprint

UNIVERSITY OF CALIFORNIA

Lawrence Radiation Laboratory
Berkeley, California

AEC Contract No. W-7405-eng-48

ALPHA DECAY OF NEUTRON DEFICIENT ASTATINE ISOTOPES

William Treytl and Kalevi Valli

October 11, 1966

ALPHA DECAY OF NEUTRON DEFICIENT ASTATINE ISOTOPES*

William Treytl and Kalevi Valli

Lawrence Radiation Laboratory
University of California
Berkeley, California

November 7, 1966

Abstract

Isotopes of astatine lighter than mass 205 were studied at the Heavy Ion Linear Accelerator by bombardment of ^{185}Re and ^{187}Re with ^{20}Ne, using Si(Au) surface barrier detectors in on-line measurements. Mass number assignments of astatine 201 through 196 are based on excitation functions and on genetic relationships with polonium isotopes. Accurate alpha energies are reported for ^{204}At through ^{196}At, for ^{202}Po through ^{194}Po, and for four light bismuth isotopes. Half lives are given for ^{202}At through ^{196}At, and for the bismuth isotopes. Isomerism was detected in ^{202}At, ^{200}At, and ^{198}At.

*This work was performed under the auspices of the U. S. Atomic Energy Commission.

1. Introduction

Alpha active neutron deficient astatine isotopes have been previously studied by several investigators[1]). The lightest isotope positively identified was ^{201}At [2]). In addition, two alpha groups were tentatively assigned to ^{200}At. Because of the experimental techniques employed, shorter lived activities could not be observed. In some cases, branching ratios and details of electron capture decay have been determined.

Use of faster on-line techniques at the HILAC allows the study of yet shorter lived activities. Compared with the 54 second half life reported for ^{200}At, the present apparatus is capable of observing activities of less than a half second. In addition to accumulating information on previously unknown nuclides, the study is of interest since recent studies have revealed isomerism in several neutron deficient isotopes of polonium[3,4,5]) and emanation[6]). Theoretically, this isomerism could be associated with the presence of the $i_{13/2}$ neutron level.

We were able to observe activities as light as ^{196}At, and isomerism in ^{202}At, ^{200}At, and ^{198}At. As a side product we confirmed previous polonium results from ^{202}Po to ^{194}Po.

2. Experimental

The present work was done at the Heavy Ion Linear Accelerator (HILAC) at the Lawrence Radiation Laboratory at Berkeley. The apparatus was basically the same as that of Macfarlane and Griffioen[7]), and later of Siivola, with a few modifications (fig. 1). A beam of heavy ions was directed through a 0.00015 inch nickel window on a thin (< 2 mg/cm^2) target. The reaction products recoiling out of the target were thermalized in a helium atmosphere, swept in a jet through a 0.35 mm diameter nozzle, and collected on a silver foil. The foil was mounted on a wheel which was flipped 180° by a solenoid, placing the activity in front of a Si(Au) surface-barrier detector (25 mm^2 ORTEC, 25 mm^2 Nuclear Diode). The flipping rate was controlled externally, and could be varied to meet the demands of the experiment.

The electronics consisted of conventional low noise preamplifier, linear amplifier, biased amplifier and 800-channel pulse height analyzer. The analyzer was externally gated on between the beam bursts of the accelerator and was synchronized with the flipping wheel.

For half life measurements, 100-channel segments of the analyzer memory were sequentally routed, eight successive spectra being taken at preset time intervals each cycle.

For accurate calibration of the spectra a calibration source was placed in front of the detector just behind the collector wheel (fig. 1). A hole was made in the wheel to expose the source to the detector in one of the two rest positions of the flipping wheel. Calibration and sample spectra were externally

routed into different 400-channel memory segments. This method allowed us to run both spectra simultaneously without mixing them. The calibration standards are given in table 1.

Beam energy selection was achieved by degradation through a set of 0.00025 inch aluminum foils placed in front of the target (fig. 1). Energies were calculated using the range energy relationship of Northcliffe[11]).

The first runs were performed with an ^{16}O-beam on natural platinum. However, this system was soon discarded in favor of the reactions

$$^{185}Re(^{20}Ne,xn)^{205-x}At$$

$$^{187}Re(^{20}Ne,xn)^{207-x}At$$

According to the manufacturer (Oak Ridge National Laboratory) the isotopic compositions of the targets were 96.66% ^{185}Re, 3.34% ^{187}Re; and 96.7% ^{187}Re, 3.3% ^{185}Re, respectively. The targets (0.5 mg/cm^2) were electrodeposited on 0.000075 inch thick nickel foil.

During the course of the study it was discovered that the collection efficiency depended considerably on the composition of the atmosphere in the target chamber. Introduction of small amounts (0.5 to 1%) of air increased the yield of astatine an order of magnitude. Since only relatively small changes (< 25%) were observed in the yields of bismuth, polonium, and francium, we conclude that the effect is connected to the hot atom chemistry of astatine. A more detailed study of the phenomenon, however, was beyond the scope of this work. Helium pressure in the target chamber was kept at 1 atmosphere.

3. Results

The information obtained for different isotopes and isomers includes, in general, alpha decay energies, half lives, and excitation functions. Three alpha spectra taken at different beam energies are given in figs. 2, 3, and 4. Excitation functions were measured both for astatine isotopes and their alpha active daughters. The mass assignments of the new astatine isotopes were mainly based upon their excitation functions and upon comparison with the excitation functions of their respective polonium daughters. Of course, half-life data and mass-energy systematics have also been considered. The excitation functions are shown in figs. 5, 6, and 7. The first one includes the excitation functions of astatine alone; the other two show them together with the alpha active daughters. In addition to the maximum yield energies, the excitation curves give a rough qualitative idea of the intensity relations. However, any comparison of the intensities must be done with great care because of the variable product yields and finite collection time.

A compilation of our results is given in tables 2, 3, and 4. In addition to the astatine data we give our polonium results as a side product to demonstrate the agreement between them and previous measurements. We also observed alpha peaks that we attributed to bismuth isotopes. Being grand-daughters of astatine, the bismuth peaks have two possible mass assignments each.

3.1. Astatine-202 and Astatine-202m

The alpha decay of astatine-202 has been studied by several investigators. Forsling et al.[13]) used mass separation to show that the two alpha peaks at 6.226 and 6.133 MeV belong to astatine-202. HOFF et al.[2]) studied the nature of these peaks by alpha-gamma coincidence techniques. They failed to observe gamma rays in coincidence with the alphas which led them to consider the possibility of isomerism. As they could not observe clear differences in the half lives of the alpha peaks, they concluded that the isomerism is more likely to occur in the daughter, bismuth-198, than in astatine-202.

Our excitation functions support the assignment of the peaks to astatine-202. However, systematic occurrence of isomerism in the neighbouring isotopes, mass-energy systematics (fig. 8), and a careful study of the half lives indicate that the isomerism is in astatine-202. In table 5 we give results of a few half-life measurements from slightly different experimental conditions. They all indicate that the 6.133 MeV peak has somewhat longer half life than the 6.226 MeV peak. We assign the 6.133 MeV peak to the ground state and the 6.226 MeV peak to an isomeric state as this fits best in the mass-energy systematics.

3.2 Astatine-201

Our results confirm those of Hoff et al.[2]).

3.3 Astatine-200 and Astatine-200m

HOFF et al. observed two alpha peaks at 6.465 and 6.412 MeV with half lives of 0.9 minutes; they assigned them tentatively to astatine-200. Our excitation functions support this assignment. Within the experimental uncertainty we found the same half life, 42 seconds, for both. However, we observed an

additional peak at 6.536 MeV with a half life of 4.3 seconds. The excitation function (figs. 5 and 6) shows that this peak belongs to astatine-200. We have assigned the 6.412 and 6.463 MeV peaks to the ground state (the 6.412 MeV peak is fine structure) and the 6.536 MeV peak to an isomeric state as this fits best in the mass-energy systematics (fig. 8).

3.4 Astatine-199

The peak at 6.638 MeV with a half life of 7.2 seconds clearly belongs to astatine-199. Its excitation function follows those of polonium-199 and polonium-199m, and its alpha energy and half life are close to what can be expected from systematics.

3.5 Astatine-198 and Astatine-198m

The alpha peaks at 6.747 MeV with a half life of 4.9 seconds and at 6.847 MeV with 1.5 seconds have excitation functions similar to polonium-198. We have assigned the former one to the ground state and the second one to an isomeric state of astatine-198. This assignment is in good agreement with energy systematics.

3.6 Astatine-197

The peak at 6.957 MeV with a half life of 0.4 seconds belongs to astatine-197. Its excitation function is similar to those of polonium-197 and polonium-197m, and it fits well in the energy systematics.

3.7 Astatine-196

In subsequent runs, an alpha peak at 7.055 MeV with a half life of 0.3 seconds was observed. The excitation function, shown in fig. 7 clearly follows

that of polonium-196. This assignment fits well with the energy systematics. From comparison with neighbouring isotopes one would expect isomerism in polonium-196. We saw only one peak; a possible isomer is probably beyond our time threshold.

The astatine isotopes lighter than astatine-196 have half lives too short to be detected with the present method. However, their alpha active daughters can be seen (figs. 2 and 7) which indicates that astatine isotopes as light as astatine-194 are produced. Direct production of polonium isotopes is unlikely since the excitation functions are so straightforward. Light astatine isotopes can be expected to have alpha active bismuth daughters. We have observed four alpha peaks in our spectra which we have assigned to bismuth. We list these activities and their possible mass assignments according to our data in table 4, along with the earlier reported values of Siivola[12]). Inspection of table 4 reveals a systematic discrepancy between our work and Siivola's with our assignments tending to be one mass number lower or three mass numbers higher than his. It seems clear, however, that the same activities are seen in both cases. Further work is in progress to resolve this discrepancy.

4. Discussion

We are performing an extensive study in the region of neutron deficient isotopes of elements between bismuth and thorium. As a part of this study we have run excitation functions for numerous combinations of target and projectile. In only a few cases have we obtained so simple and regular excitation functions as in the reactions $^{185}Re + ^{20}Ne$ and $^{187}Re + ^{20}Ne$. We interpret this as indicative of classical compound nucleus reactions predominating over competing processes. Accordingly, direct production of polonium should be negligible, and the excitation functions given in figs. 5 to 7 bind the assignments of astatine isotopes very tightly to those of polonium. The light polonium isotopes, in turn, have been studied by several groups, and at least three latest reports[3,4,5]) agree about their assignments. In a previous study[6]) we were able to connect the assignments of light emanation isotopes to those of astatine and polonium. Preliminary results of a restudy of light francium isotopes confirm the assignments of Griffioen and Macfarlane[14]) and connect the francium isotopes to emanation and astatine. Thus, we have an area on the chart of nuclides where the assignments are interconnected several ways.

Figure 8 shows the systematic occurrence of isomerism in neutron deficient isotopes of elements above bismuth. The isomers are all in odd-neutron isotopes. In even-proton isotopes the isomerism can be understood in terms of the $i_{13/2}$ neutron level as discussed in our previous paper[6]). In the odd-proton elements francium and astatine coupling between the odd nucleons should be considered.

Another interesting feature is the step-like behaviour of the mass-energy curves. If a smooth curve were fitted to the ground state energies, odd-neutron isotopes would lie below the curve and even-neutron isotopes above it. This behaviour could be explained by a relative weakening of the pairing effect between neutrons when the closed shell configuration is approached. A similar behaviour of protons can explain the apparent "pairing" of the curves of different elements. For a constant neutron number the steps between bismuth and polonium, astatine and emanation, and francium and radium would then be smaller than those between polonium and astatine, emanation and francium, and radium and actinium.

Acknowledgments

We wish to thank E. K. Hyde and A. Ghiorso for their valuable assistance and encouragement. The support of the staff of the HILAC and the Electronics Division is gratefully acknowledged. This work was performed under the auspices of the U. S. Atomic Energy Commission.

References

1) E. K. Hyde, I. Perlman, and G. T. Seaborg, "The Nuclear Properties of Heavy Elements," Vol. II, Detailed Radioactivity Properties, (Prentice Hall, Inc., Englewood Cliffs, New Jersey, 1964), p. 1077

2) R. W. Hoff, F. Asaro, and I. Perlman, J. Inorg. Nucl. Chem. 25 (1963) 1303

3) A. Siivola, Lawrence Radiation Laboratory Report UCRL-11828 (1964)

4) E. Tielsch, Phys. Letters 17 (1965) 273

5) C. Brun, Y. LeBeyec, and M. Lefort, Phys. Letters 16 (1965) 286

6) M. J. Nurmia, K. Valli, and E. K. Hyde, Lawrence Radiation Laboratory Report UCRL-16735 (1966)

7) R. D. Macfarlane and R. D. Griffioen, Nucl. Instr. Methods 24 (1963) 461

8) A. Rytz, Helv. Phys. Acta 34 (1961) 240

9) G. Bastin-Scoffier, Compt. Rend. 254 (1962) 3854

10) F. Asaro, F. Stephens, Jr., and I. Perlman, Phys. Rev. 92 (1953) 1495

11) J. C. Northcliffe, Phys. Rev. 120 (1960) 1744

12) A. Siivola, private communication concerning data presented at Lysekil Conference, Sweden (1966)

13) W. Forsling and T. Alväger, Arkiv Fysik 19 (1961) 353

14) R. D. Griffioen and R. D. Macfarlane, Phys. Rev. 133 (1964) 1373

Table 1

Alpha energy standards used in the calibrations

Isotope	Alpha energy (MeV)	Ref.	Isotope	Alpha energy (MeV)	Ref.
^{212}Po	8.7854	[8]	^{212}Bi	6.0898	[8]
^{215}Po	7.3841	[8]	^{212}Bi	6.0506	[8]
^{219}Em	6.8176	[8]	^{224}Ra	5.6840	[9]
^{216}Po	6.7772	[9]	^{223}Ra	5.6053	[8]
^{211}Bi	6.6222	[8]	^{228}Th	5.424*	[10]
^{220}Em	6.2884	[9]	^{228}Th	5.341*	[10]

*Energy given in [10] corrected to fit ^{224}Ra = 5.6840 MeV [9].

Table 2

Astatine results obtained in this work compared with those of Hoff et al.[2])

Isotope	This work		Hoff et al.	
	Alpha energy (MeV)	Half life	Alpha energy (MeV)	Half life
^{196}At	7.055±0.007	0.3±0.1 sec		
^{197}At	6.957±0.005	0.4±0.1 sec		
^{198m}At	6.847±0.005	1.5±0.3 sec		
^{198}At	6.747±0.005	4.9±0.5 sec		
^{199}At	6.638±0.005	7.2±0.5 sec		
^{200m}At	6.536±0.005	4.3±0.3 sec		
$^{200'}$At	6.463±0.005	42 ±2 sec	6.465±0.011	0.9±0.2 min
^{200}At	6.412±0.005	42 ±2 sec	6.412±0.009	0.9±0.2 min
^{201}At	6.342±0.003	90 ±4 sec	6.342±0.006	1.5±0.1 min
^{202m}At	6.226±0.003	2.6±0.3 min	6.227±0.003*	3.0±0.2 min*
^{202}At	6.133±0.003	3.0±0.3 min	6.133±0.002*	3.0±0.2 min*
^{203}At	6.086±0.003		6.085±0.001	7.4±0.3 min
^{204}At	5.947±0.003		5.948±0.003	9.3±0.2 min

*Both groups attributed to ^{202}At ground state.

Table 3

Polonium alpha energies obtained in this work compared with those reported previously

Isotope	Alpha energy (MeV)				
	This work	Siivola[3])	Tielsch[4])	Brun et al.[5])	Hoff et al.[2])
^{193}Po		7.00			
^{194}Po	6.845 ± 0.007	6.85			
^{195m}Po	6.698 ± 0.005	6.72			
^{195}Po	6.608 ± 0.005	6.63			
^{196}Po	6.517 ± 0.005	6.53			
^{197m}Po	6.378 ± 0.005	6.39		6.37 ± 0.03	
^{197}Po	6.280 ± 0.005	6.30		6.27 ± 0.03	
^{198}Po	6.178 ± 0.005	6.18		6.16 ± 0.02	
^{199m}Po	6.053 ± 0.005		6.05	6.04 ± 0.01	
^{199}Po	5.950 ± 0.008	6.06	5.95	5.93 0.02	
^{200}Po	5.860 ± 0.003	5.86	5.85	5.85 0.01	5.860 ± 0.006
^{201m}Po	5.780 ± 0.005		5.77	5.77 0.01	5.780 ± 0.007
^{201}Po	5.677 ± 0.005		5.67	5.67 0.01	5.674 ± 0.009
^{202}Po	5.578 ± 0.005		5.57	5.57	5.580 ± 0.010

Table 4

Present bismuth results compared with those of Siivola[12])

Present work			Siivola		
Assignment (fig. 7)	Alpha energy (MeV)	Half life	Isotope	Alpha energy (MeV)	Half life
			^{190}Bi	6.46	?
			^{191m}Bi	6.90	?
^{190}Bi or ^{194}Bi	6.305 ± 0.005	14 ± 2 sec	^{191}Bi	6.33	15.4 sec
^{191}Bi or ^{195}Bi	6.050 ± 0.005	38 ± 5 sec	^{192}Bi	6.07	48 sec
			^{193}Bi	6.50	3.2 sec
^{192}Bi or ^{196}Bi	5.892 ± 0.005	74 ± 5 sec	^{193}Bi	5.91	60 sec
			^{194}Bi	5.61	85 sec
^{191}Bi or ^{195}Bi	6.100 ± 0.005	55 ± 10 sec	^{195m}Bi	6.13	85 sec
			^{195}Bi	5.42	2.5 min

Table 5

Half lives obtained for 6.133 and 6.226 MeV alpha peaks in a few measurements

	Half life (min)		Reaction	Ion beam energy
	6.133 MeV	6.226 MeV		
1	3.3	2.8	$^{187}Re + ^{20}Ne$	108 MeV
2	3.1	2.6	$^{187}Re + ^{20}Ne$	116 MeV
3	2.7	2.4	$^{197}Au + ^{16}O$	162 MeV
4	2.9	2.7	$^{187}Re + ^{20}Ne$	108 MeV
5	3.0	2.5	$^{197}Au + ^{16}O$	162 MeV
6	3.0	2.6	$^{197}Au + ^{16}O$	162 MeV

Figure Captions

Fig. 1. Schematic diagram of the on-line apparatus.

Fig. 2. Alpha spectrum obtained at full energy neon beam.

Fig. 3. Alpha spectra showing the lightest astatine isotopes and their polonium daughters.

Fig. 4. Alpha spectrum obtained at 124 MeV neon beam.

Fig. 5. Excitation functions of the astatine isotopes.

Fig. 6. Excitation functions of ^{197}At through ^{200}At and their polonium daughters.

Fig. 7. Excitation functions of the lightest astatine, polonium and bismuth isotopes.

Fig. 8. Alpha energy versus neutron number for different elements in the area below 126 neutron shell and above 82 proton shell. The solid circles indicate energies assigned to ground state alpha decay. The crosses represent alpha energies assigned to isomeric states. The open circles are alpha transitions to excited levels at the daughter nuclei (alpha fine structure). Dashed curves refer to assignments considered uncertain by the authors. The lightest three francium values are from data soon to be published.

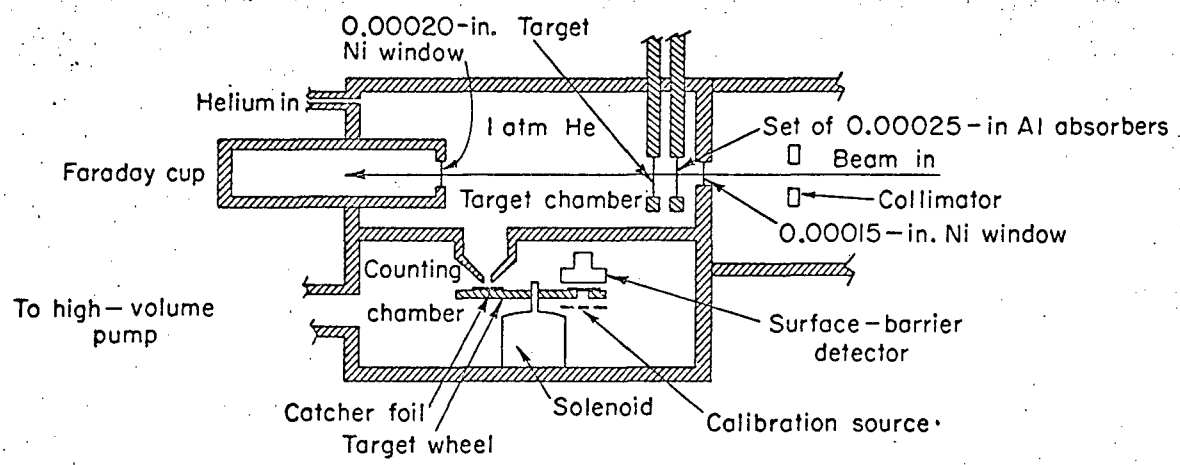
0.00020-in. Ni window
Target
Helium in
1 atm He
Set of 0.00025-in Al absorbers
Beam in
Faraday cup
Target chamber
Collimator
0.00015-in. Ni window
Counting chamber
To high-volume pump
Surface-barrier detector
Catcher foil
Target wheel
Solenoid
Calibration source
MUB-13860

Fig. 1

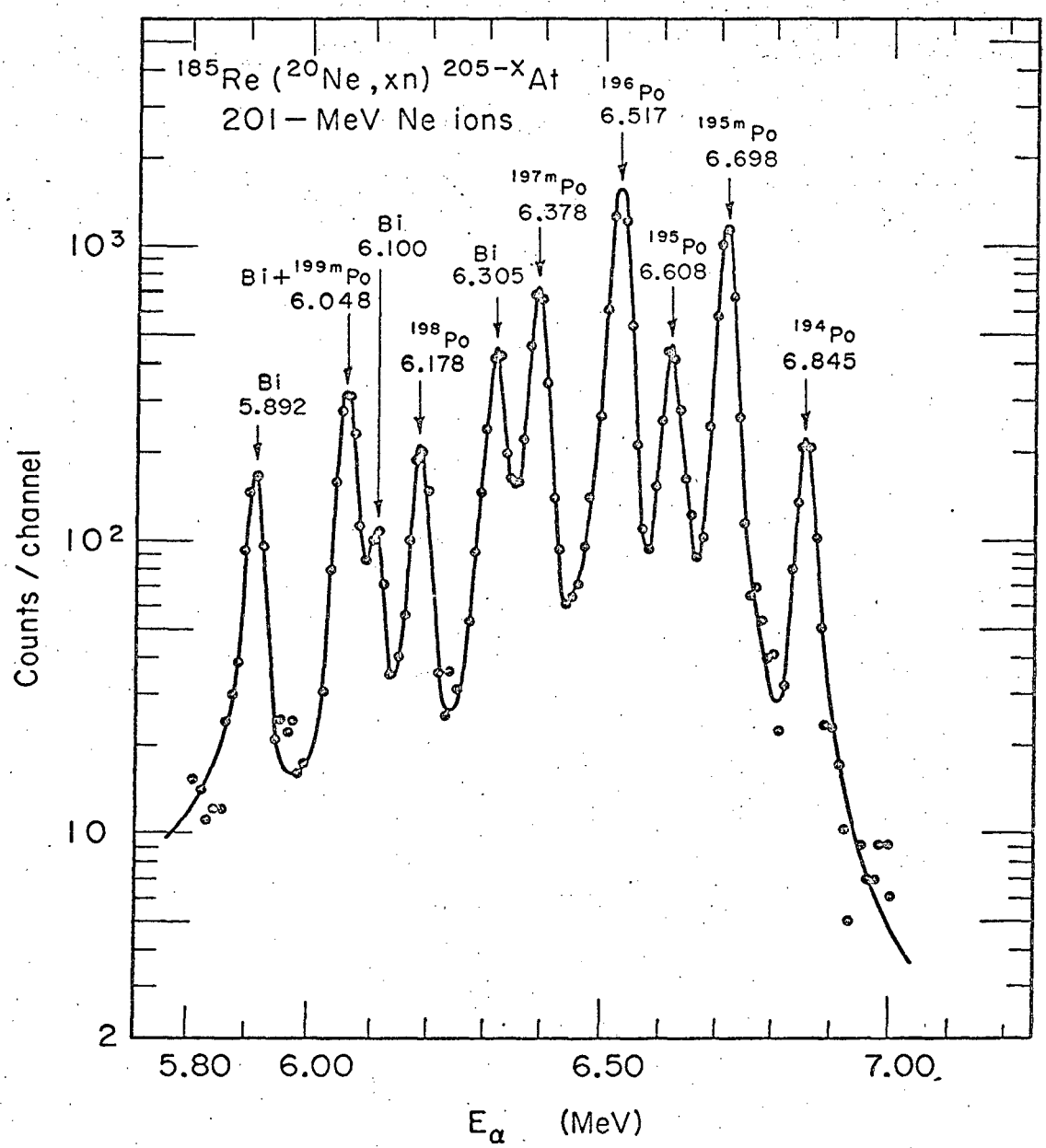

MUB-13859

Fig. 2

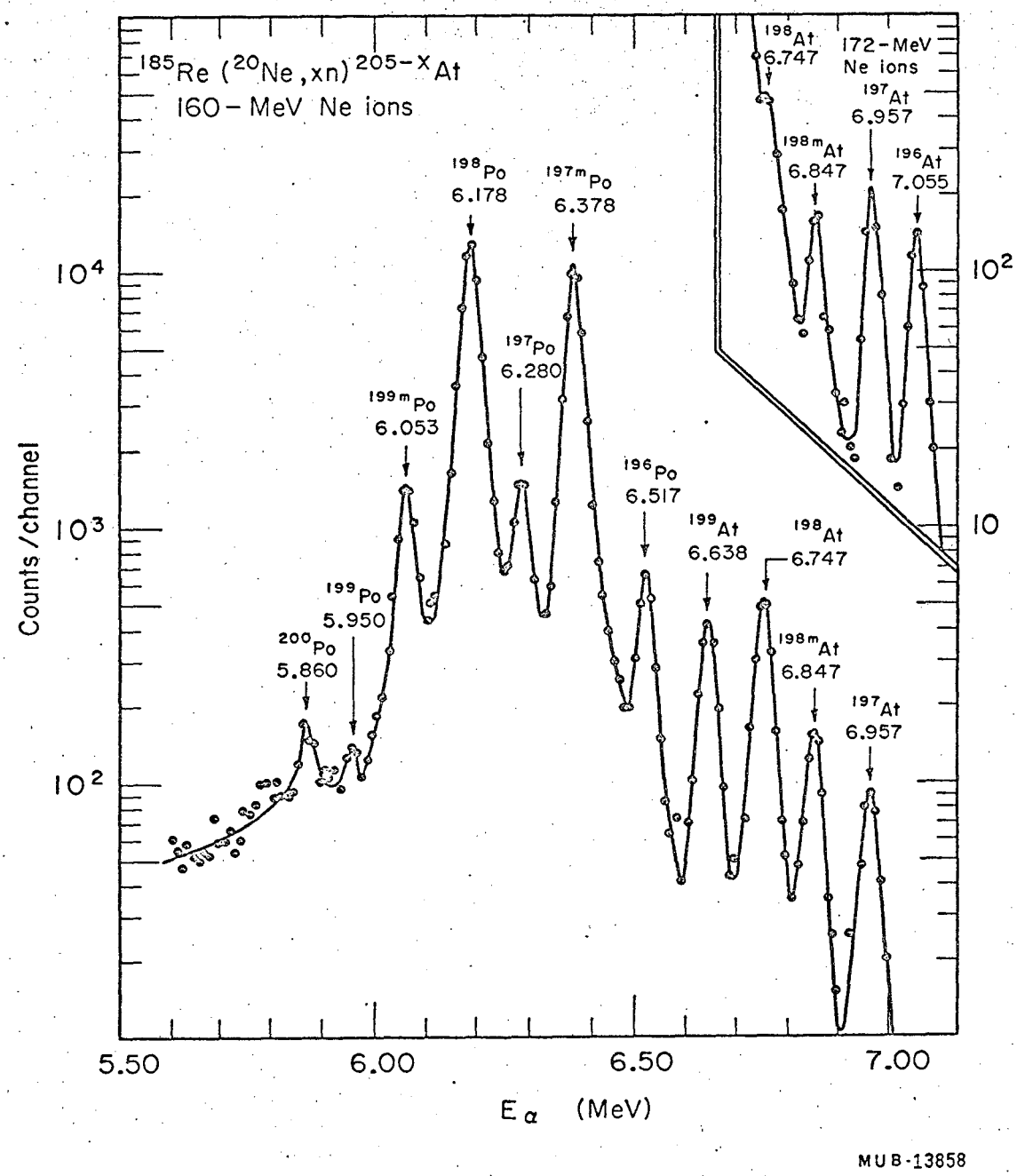
185Re (20Ne,xn) 205-xAt
160-MeV Ne ions
172-MeV Ne ions
198At 6.747
197At 6.957
198mAt 6.847
196At 7.055
198Po 6.178
197mPo 6.378
197Po 6.280
199mPo 6.053
196Po 6.517
199At 6.638
198At 6.747
198mAt 6.847
197At 6.957
199Po 5.950
200Po 5.860
Counts /channel
10^4
10^3
10^2
10^2
10
5.50
6.00
6.50
7.00
Eα (MeV)
MUB-13858

Fig. 3

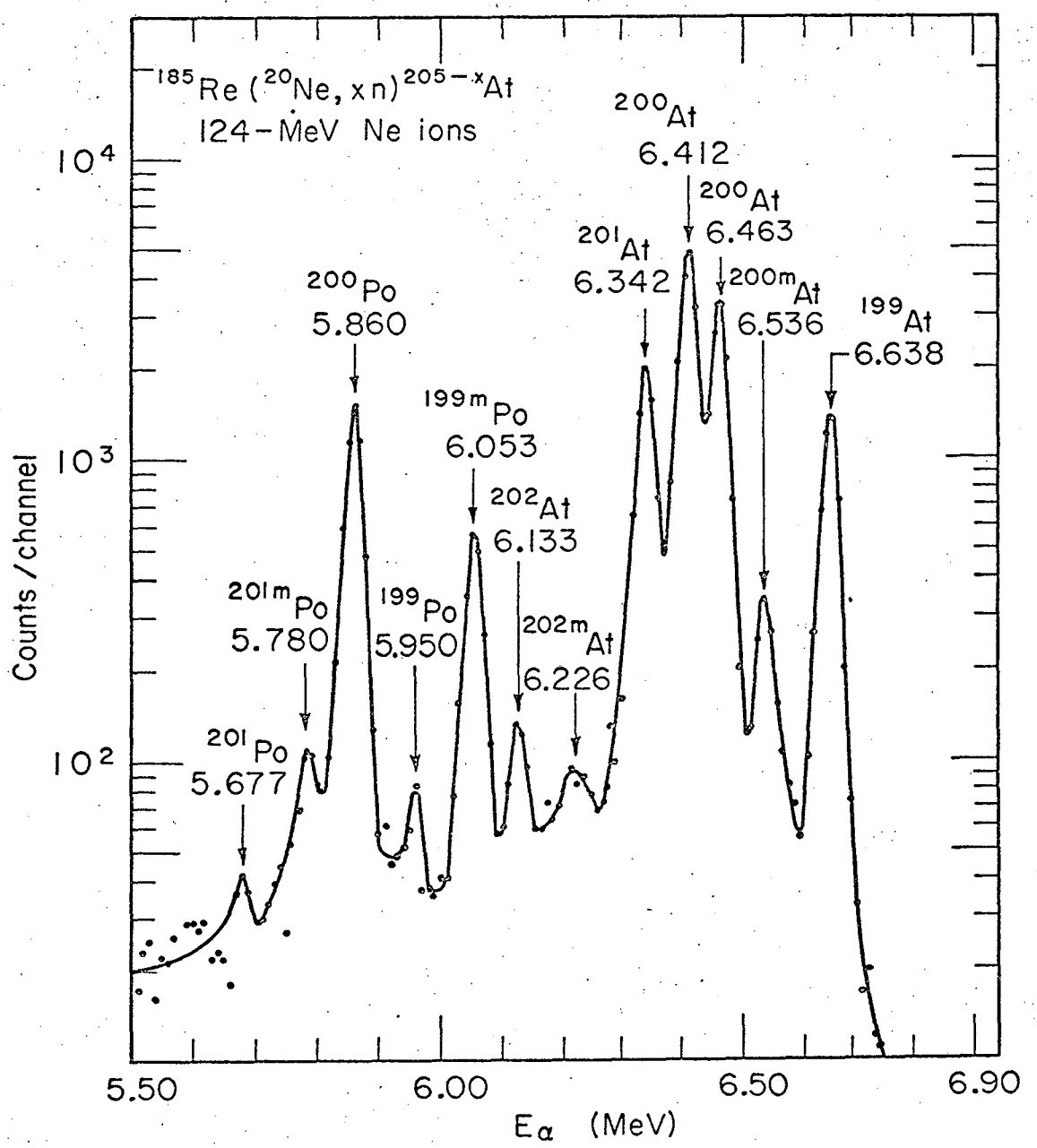

MUB-13861

Fig. 4

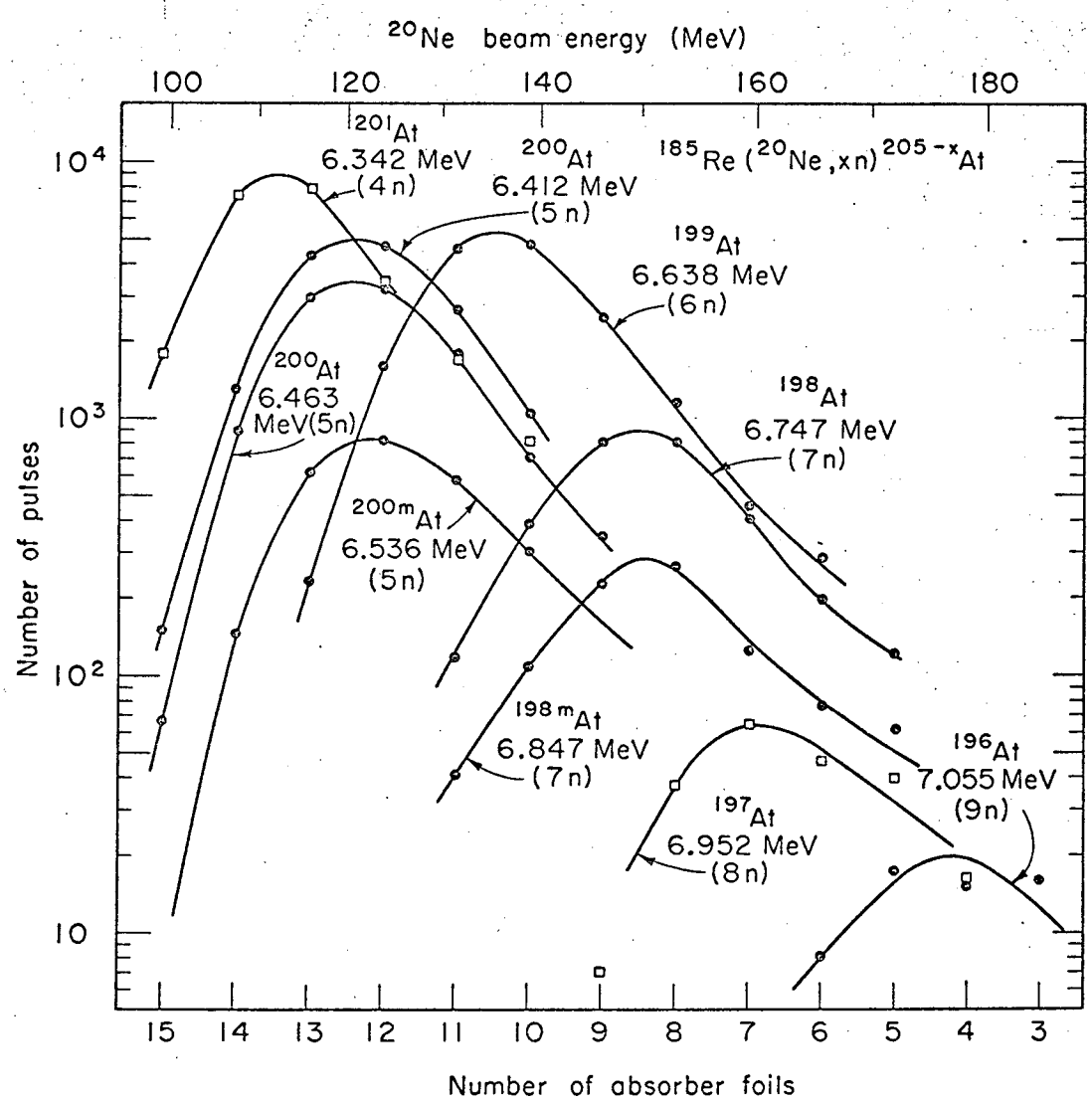
^{20}Ne beam energy (MeV)
100
120
140
160
180
^{185}Re (^{20}Ne,xn)$^{205-x}$At
^{201}At
6.342 MeV
(4n)
^{200}At
6.412 MeV
(5n)
^{199}At
6.638 MeV
(6n)
^{200}At
6.463
MeV(5n)
^{198}At
6.747 MeV
(7n)
^{200m}At
6.536 MeV
(5n)
^{198m}At
6.847 MeV
(7n)
^{196}At
7.055 MeV
(9n)
^{197}At
6.952 MeV
(8n)
10^4
10^3
10^2
10
Number of pulses
15
14
13
12
11
10
9
8
7
6
5
4
3
Number of absorber foils
MUB 13854

Fig. 5

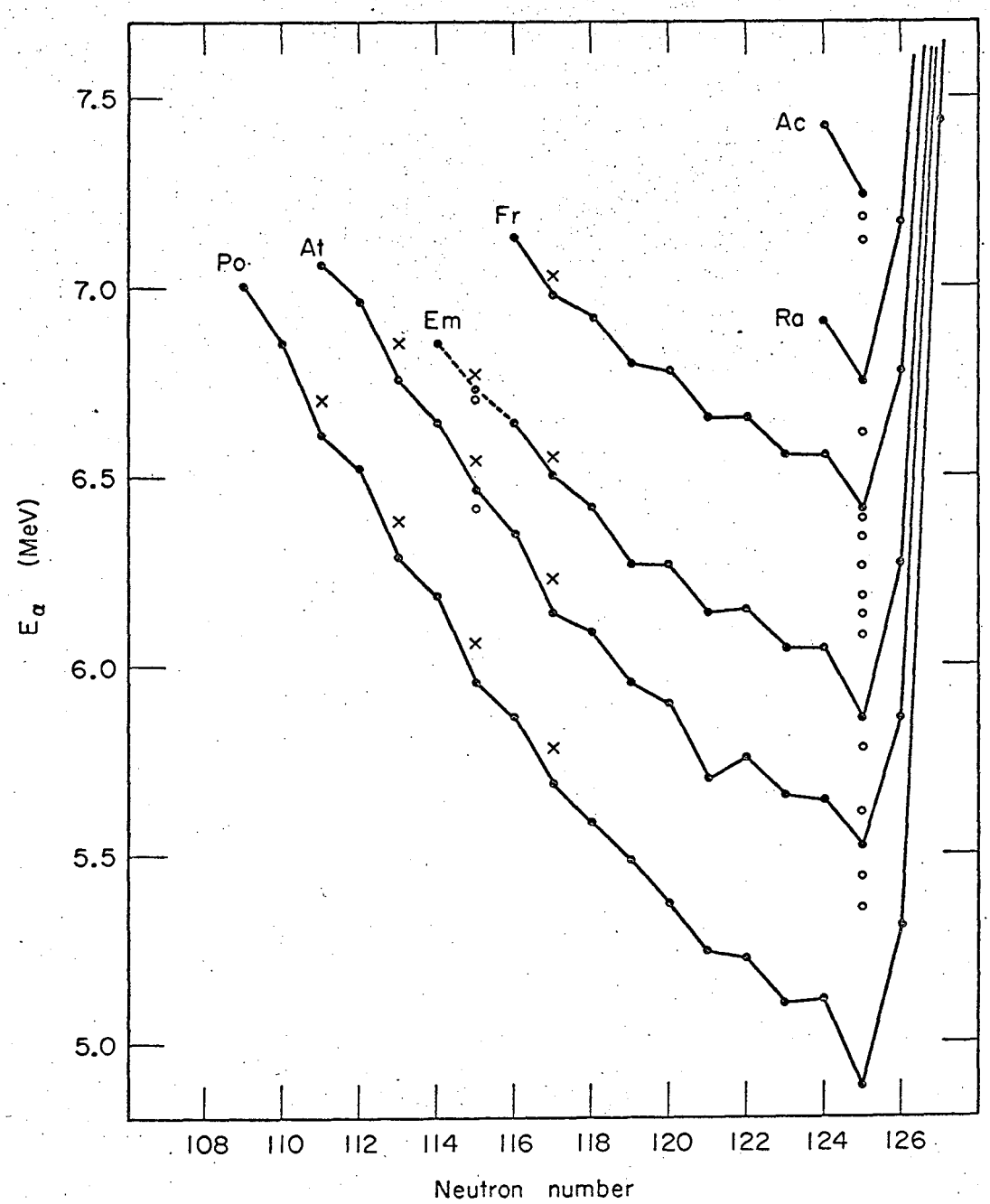

MUB-13855

Fig. 8

This report was prepared as an account of Government sponsored work. Neither the United States, nor the Commission, nor any person acting on behalf of the Commission:

A. Makes any warranty or representation, expressed or implied, with respect to the accuracy, completeness, or usefulness of the information contained in this report, or that the use of any information, apparatus, method, or process disclosed in this report may not infringe privately owned rights; or

B. Assumes any liabilities with respect to the use of, or for damages resulting from the use of any information, apparatus, method, or process disclosed in this report.

As used in the above, "person acting on behalf of the Commission" includes any employee or contractor of the Commission, or employee of such contractor, to the extent that such employee or contractor of the Commission, or employee of such contractor prepares, disseminates, or provides access to, any information pursuant to his employment or contract with the Commission, or his employment with such contractor.