UCRL-17254

University of California

Ernest O. Lawrence Radiation Laboratory

A CERAMIC VACUUM CHAMBER FOR A FAST-CYCLING PROTON SYNCHROTRON

TWO-WEEK LOAN COPY

This is a Library Circulating Copy which may be borrowed for two weeks. For a personal retention copy, call Tech. Info. Division, Ext. 5545

DISCLAIMER

This document was prepared as an account of work sponsored by the United States Government. While this document is believed to contain correct information, neither the United States Government nor any agency thereof, nor the Regents of the University of California, nor any of their employees, makes any warranty, express or implied, or assumes any legal responsibility for the accuracy, completeness, or usefulness of any information, apparatus, product, or process disclosed, or represents that its use would not infringe privately owned rights. Reference herein to any specific commercial product, process, or service by its trade name, trademark, manufacturer, or otherwise, does not necessarily constitute or imply its endorsement, recommendation, or favoring by the United States Government or any agency thereof, or the Regents of the University of California. The views and opinions of authors expressed herein do not necessarily state or reflect those of the United States Government or any agency thereof or the Regents of the University of California.

Submitted to the 1967 U. S. National
Particle Accelerator Conference, March 1-3,
1967, Washington, D. C.

UCRL-17254

UNIVERSITY OF CALIFORNIA

Lawrence Radiation Laboratory
Berkeley, California

AEC Contract No. W-7405-eng-48

A CERAMIC VACUUM CHAMBER FOR A FAST-CYCLING PROTON SYNCHROTRON

Peter T. Clee and H. Paul Hernandez

February 1, 1967

A CERAMIC VACUUM CHAMBER FOR A FAST-CYCLING PROTON SYNCHROTRON*

Peter T. Clee† and H. Paul Hernandez

Lawrence Radiation Laboratory
University of California
Berkeley, California

February 1, 1967

Summary

Alumina ceramic vacuum chambers are proposed in the area of the magnets for the 8-GeV injector synchrotron of the 200-GeV accelerator. The chambers cannot be made in one piece, and the only acceptable joint involves metal, which has a perturbing effect on the magnetic field. For this reason it was proposed that the longest possible ceramic be used to keep the joints to a minimum, but long ceramics require wider tolerances, and this becomes costly in magnet gap. Sample ceramics produced by industry were examined, and from the results the overall cost of ceramics and magnet gap were related to ceramic length. Installing and locating the chambers in the magnet gap is difficult due to the restrictions of shape and size of the gap.

Introduction

The 200-GeV synchrotron being studied by the Lawrence Radiation Laboratory has an 8-GeV synchrotron operating at 18 cps as a booster injector. To avoid disturbance of the magnetic guide fields due to eddy currents, little or no metal can be tolerated in the magnet gaps. This requirement severely limits design of the vacuum chamber, especially with regard to the material for fabrication. Other accelerators have used epoxy-glass laminates, but due to the high beam intensities it has been found that this material has a very short life and vacuum chambers have to be constantly replaced.[1] Examination of other suitable materials indicated that alumina would be a very suitable material,[2] providing that industry could meet the stringent tolerance requirements.

Figure 1 shows a cross section through a typical magnet. The limiting boundaries for the vacuum chamber are the magnet defocus and focus pole tips and the elliptical area allowed for the circulating beam. The only parameter that can be changed to accommodate the vacuum chamber is the distance between the pole tips. The length of a typical magnet is 13 ft, and a vacuum chamber for such a magnet would be 15 ft long. Industry was consulted with regard to the problems of making an alumina vacuum chamber. It was found that their equipment limited the length of the chamber to 30 in. This meant that several lengths of ceramic would have to be joined together to form a 15-ft chamber. To study the problems involved in making an alumina ceramic vacuum chamber, we ordered four 30-in. lengths of ceramic from Western Gold and Platinum Co., Belmont, California and an order to join two of these lengths was placed with Litton Industries, Palo Alto, California. The chambers were manufactured from 97.6% Al_2O_3 by the isostatic molding process. Jointing was carried out by brazing 0.015 in.-thick Cu-Ni "U" flanges onto the ends of the ceramic, which had first been metallized by the Mo-Mn sintered-metal process.[2] The "U" flanges were then welded together. Figure 2A shows a typical joint. This type of joint gave some flexibility to the 15-ft chamber, but introduced metal into the magnet gap. To keep the number of joints to a minimum, the aim was to use the longest possible ceramic sections compatible with industries' techniques, and yet meet the design requirements.

General Design Considerations

To conserve space the cross section of the chamber was made elliptical. The chamber must withstand a pressure of 1 atmosphere, and some work was done to determine the required wall thickness for such a chamber.[4] It was found that a 0.18-in.-thick wall provides a safety factor of 4; this would allow for differences between ideal and actual shape, and stress raisers, such as scratches produced while the ceramic is in the green state. This wall thickness also met the end-flange requirements.

Some indication of tolerance had to be given to the manufacturer. The inner limit was the beam area and the outer limit was the pole tip set at 0.34 in. from the beam area at the point of minimum clearance (see Fig. 1). The 0.34 in. was to be taken up by an 0.18-in. chamber-wall thickness, a 0.03-in. clearance for installation, and 0.13 in. for dimensional tolerance on the

*This work performed under the auspices of the U. S. Atomic Energy Commission.
†On exchange from Rutherford High Energy Laboratory, Berkshire, England.

ceramic, including variation in wall thickness, deviation from cross-sectional dimensions, twist, bow, and waviness.

Manufacturing Problems

The isostatic mold mandrel determines the inside size and shape of the chamber. Alumina shrinks 20% in all directions during firing, and this must be considered when making the mandrel, so that the finished size is within tolerance.

There are two ways of producing the external dimensions--machine the ceramic in the green state, or grind after the firing cycle. It was decided that, as grinding an elliptical shape would be complicated, the ceramic would be machined in the green state. Again an allowance had to be made for shrinkage.

With the wall thickness machined to size before firing, there was a problem of how to support a long, thin-walled tube during the firing cycle so that distortion would be kept to a minimum. At high temperatures when the material is plastic, it tends to slump, and the final shape is distorted. The wall thickness was increased to 0.45 in. on the major axis, while the minor axis remained intact to meet the dimensional requirements at the points of minimum clearance. This helped the stability of the chamber during firing, increased the strength of the fired chamber, provided a location into which pickup points could be ground, and also increased the placement tolerance of the "U" flange. After some experimentation, four 30-in. lengths of ceramic chamber were produced.

Measurement of Chambers

Measuring an elliptical shape is not simple, because such a shape lacks good datum points. To accurately measure these chambers the method and equipment shown in Fig. 3 was devised. Measurements were taken which gave dimensions of cross-sectional shape along the chamber length, the amount of twist, the amount of bow in both axes and waviness along the length. A special caliper gauge was used to measure the wall thickness. The findings were as follows:

Wall Thickness

The wall thickness at points of minimum clearance was 0.18 to 0.20 in., but due to the problems of machining such a flat ellipse, the thickness at some points was as small as 0.15 in.

Cross-Sectional Shape and Taper

Dimensions of the major and minor axes varied by as much as 0.120 in. This variation resulted in a uniform taper over the length of the chamber. The variation in the major axis was acceptable, but the minor-axis variation took up a large proportion of the allowable tolerance at the points of minimum clearance.

Bow

Bow measured in the plane of the minor axis varied from 0.03 to 0.075 in. This again takes up a major portion of the tolerance at the points of minimum clearance. Bow in the plane of the major axis was less than 0.025 in. and was not a real problem.

Twist

Twists of up to 1 deg were measured along the length of the ceramic, but again had little effect on the points of minimum clearance.

The total effect of these variations was checked by placing the ceramic on a mandrel representing the beam space. A gauge representing the pole tips--set at 0.34 in. from the beam at the points of minimum clearance--was then slid over the outside of the chamber. The total 0.34 in. was occupied by the chamber, leaving no tolerance for assembling and jointing the chambers or the 0.03-in. clearance for installation of the chamber. By further experiments and adjustments to the molding mandrel, the 0.12-in. taper can be reduced, but with the method of manufacture used, it may be difficult to eliminate the bow.

Cost Optimization

It is difficult to give definite figures, but there is an indication that the shorter the length of the ceramic, the tighter the dimensional tolerance can be (see Table I). This results in a smaller magnet gap and a saving on magnet costs. However, shorter ceramic lengths require more metal joints, which increases the cost and creates more disturbances to the magnetic field.

The cost can be divided into actual chamber cost and associated costs. The chamber cost includes the cost of ceramic and jointing. Associated cost covers the additional magnet pole gap to allow for chamber tolerance.

Ceramic Costs

There is some experience with various lengths of ceramic pieces--the Deutsches

Table I. Details and breakdown of costs for a 15-ft long chamber made from various lengths of ceramic.

No. of ceramic lengths	26	20	14	10	8	6
No. of joints	27	21	15	11	9	7
Length taken up by joints (in.)	13.5	10.5	7.5	5.5	4.5	3.5
Total length of ceramic (in.)	166.5	169.5	172.5	174.5	175.5	176.5
Length of ceramic piece (in.)	6.42	8.5	12.3	17.45	22.0	29.4
Total ceramic cost at $10/in. (dollars)	1665	1695	1725	1745	1755	1765
Total cost of joints at $140/joint (dollars)	3780	2940	2100	1540	1260	980
Total actual cost of chamber (dollars)	5445	4635	3825	3285	3015	2745
Associated cost of magnet gap to allow for tolerance (dollars)	935	1235	1790	2540	3200	4280
Total actual and associated cost (dollars)	6380	5870	5615	5825	6215	7025

Elektronen-Synchrotron (DESY) chamber is being made of 6-in. lengths of ceramic, the Cambridge Electron Accelerator (CEA) uses 18-in. pieces, and the Lawrence Radiation Laboratory's experimental lengths are 30 in. It would appear that a reasonable guide price for chambers of this cross section is $10 per linear inch of ceramic, which does not seem to vary for different lengths.

Jointing Cost

From the little information available, a guide price is $140 per joint. This includes metallizing the ends of the mating chambers, making two flanges, brazing the flanges to the ceramic, and welding the two flanges together.

Increase in Magnet Gap for Ceramic Tolerance Cost

In the case of the 8-GeV synchrotron, one-inch increase in magnet gap adds $1.1 M to the total cost of the magnet system.[3] As stated previously, there are indications that for shorter lengths of ceramic, tighter tolerances can be maintained, but there is not enough information to give exact figures. Therefore we assume that 0.26 in. of magnet gap is required for 30-in. lengths of ceramic, and that this figure decreases linearly with the reduction of ceramic length.

Example

A typical magnet for the 8-GeV synchrotron is 13-ft-long; half its length has a focusing-gradient pole tip, the other half a defocusing-gradient pole tip. The vacuum chamber for this magnet would be 15-ft long.

The synchrotron has a total of 854 ft of magnet; therefore, the cost of 0.25 in. of pole gap on a 13-ft magnet is

$$\frac{1.1 \times 10^6 \times 13 \times 0.26}{854} = \$4370 \ .$$

Figure 4 shows the total cost (actual and associated) for a 15-ft chamber made from increasing lengths of ceramic.

Grinding the Ceramic to Reduce Tolerance

In joining the ceramics, the ends must be aligned as in Fig. 2, A or B. Figure 2C shows a case that would not be acceptable, and Fig. 5 gives a typical problem which would produce Case 2C. If the ceramics in Fig. 5 were moved to align the ends, the ceramic would either foul the magnet pole tips when installed, or the beam would hit the chamber wall. Some of this error could be removed by grinding. Grinding internally may be difficult, but grinding the outside should not be a problem. If we assume that 33% of the error can be removed by grinding and that grinding costs vary linearly from $40 per 6-in. length to $60 per 30-in. length, the applicable costs would be those shown in Table II.

Figure 4 gives the total cost for a 15-ft chamber made from increasing lengths of ceramic which have been ground after firing.

Table II. Breakdown of costs for a 15-ft chamber made from various lengths of ceramic that have been ground after firing.

Ceramic length (in.)	6.42	8.5	12.3	17.45	22.0	29.4
Total ceramic cost at $10/in. (dollars)	1665	1695	1725	1745	1755	1765
Total cost of joints at $140/joint (dollars)	3780	2940	2100	1540	1260	980
Grinding cost (dollars)	1050	844	634	495	414	357
Total actual cost of chamber (dollars)	6495	5479	4459	3780	3429	3102
Associated cost of magnet gap to allow for tolerance (dollars)	620	820	1185	1685	2130	2850
Total actual and associated cost (dollars)	7115	6299	5644	5465	5559	5952

Installation and Support of Chamber

Alumina ceramic chambers are quite robust in spite of the low tensile strength of alumina. Nevertheless, the 15-ft chambers need careful handling to avoid overstressing the joints or applying high loads that might crack the ceramic.

To install the chamber in the guide-field magnets requires that it be threaded in from the end of the magnet. The total clearance between chamber and magnet is 0.06 in. Therefore adequate support and accurate guidance during installation are essential. One method of support is to hold the chamber internally and guide one end down the center of the magnet gap. One end of the internal support may be supported from a crane, or it may be necessary to set up a platform (see Fig. 6).

When the chamber is installed in the gap, it must be located so that the accelerating beam can pass through freely without hitting the chamber walls. It would be unsatisfactory if the chamber had to be optically aligned, especially if it had to be removed and reinstalled after operation of the machine. Therefore a locating device aligned prior to installing the chamber is required. Such a device (Fig. 7) as well as all items near the magnet gap should be non-metallic and radiation-resistant.

Prior to jointing the chamber pieces are surveyed and location points are ground on the outside. These points can then be used for setting up for jointing and also for locating the chamber when installed in the magnet gap.

Conclusion

With the present state of the art, and where the magnet gap is a dominating factor, it can be seen from Fig. 4 that the optimum length for making ceramic pieces with cross-sectional shape and sizes as mentioned, which are machined before firing, is 12 in. However, in a fast-cycling machine the amount of metal in the gap is also a dominating factor, and longer lengths may have to be adopted at a cost to the magnet gap.

One of the biggest problems in producing long lengths of ceramic is the supporting during firing. Slumping during the plastic state results in bow and (or) taper; this can be reduced by making the wall thicker. Thickness can be increased by leaving the extra molding material on during the firing and grinding it off after firing. The ceramic has to be set up for grinding datum points so it is just as easy to grind the outer surface to size at the same setting. However, using this procedure does limit the outer shape as it is simpler to grind flat surfaces. A possible shape for the booster chambers, if the grinding technique were used, is shown in Fig. 8.

The Cambridge Electron Accelerator at Harvard has 14-ft chamber assemblies installed. The ceramic lengths are limited to 18 in. and were ground after firing. The ceramic external shape, however, is simpler than the booster shape.

Both the elliptical sections shown in Fig. 1 and the grind after firing shape shown in Fig. 8 are feasible. The elliptical sections involve high first cost, developing the mold size, green-state machining techniques, and a method for supporting the chamber in the furnace, but may be very suitable for high-production runs--especially if 12-in. lengths are acceptable. The grind-after-firing technique would be easier to put into production quickly and very suitable for small production runs. Figure 4 shows that grinding

lengths over 20 inches gets to be expensive.

One thing that is certain, making vacuum chambers in alumina ceramic is a practical proposition, provided the limitations are recognized.

Acknowledgments

The authors are indebted to Western Gold and Platinum Co. and to Litton Industries for all the information and help during the manufacture of the experimental chamber.

References

1. R. D. Hay and H. Winick, "Engineering Aspects of Metal-Epoxy Vacuum Chamber Compared to Alumina-Ceramic Vacuum Chamber at the CEA," presented at the 1967 U. S. National Particle Accelerator Conference, Washington, D. C., March 1-3, 1967.

2. W. H. Kohl, "Ceramics and Ceramic-to-Metal Seals," Vacuum, 14, 333 (1964).

3. H. Paul Hernandez, "Selection of a Lamination Shape for a Fast-Cycling Alternating-Gradient Magnet Core," (Paper D-3 of these Proceedings).

4. Gerd Behrsing, Lawrence Radiation Laboratory Engineering Note M3529, March 19, 1965.

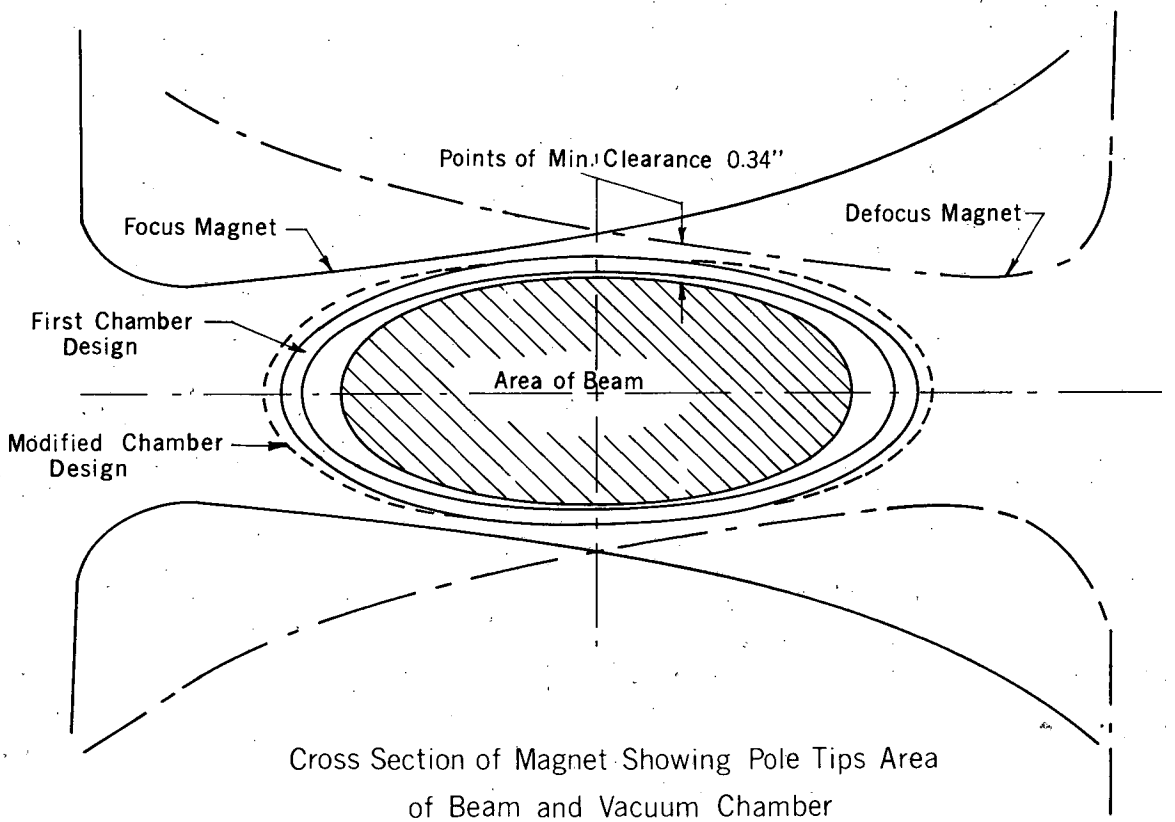

Cross Section of Magnet Showing Pole Tips Area of Beam and Vacuum Chamber

fig. 1

XBL 672-564

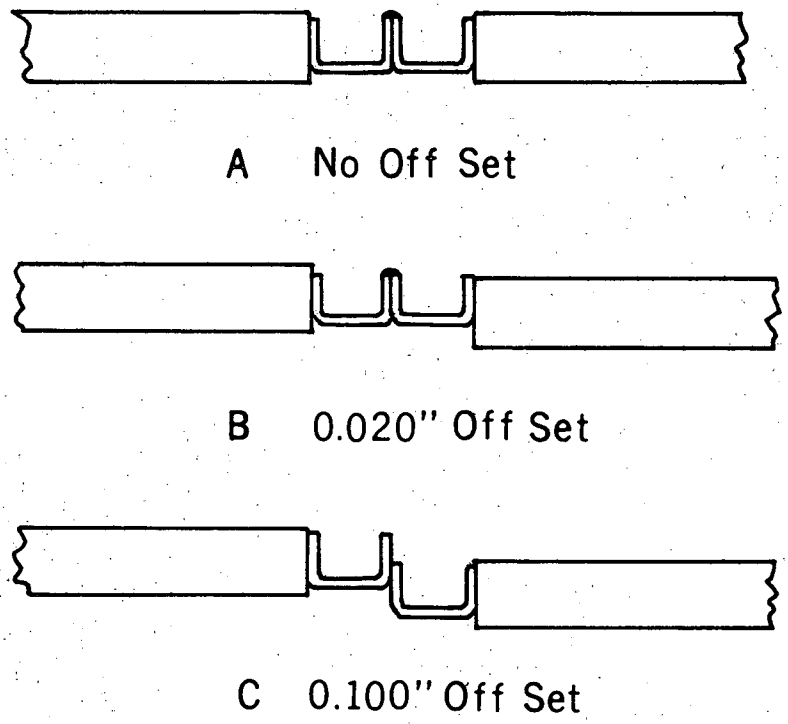

Typical Joints

fig. 2

XBL 672-561

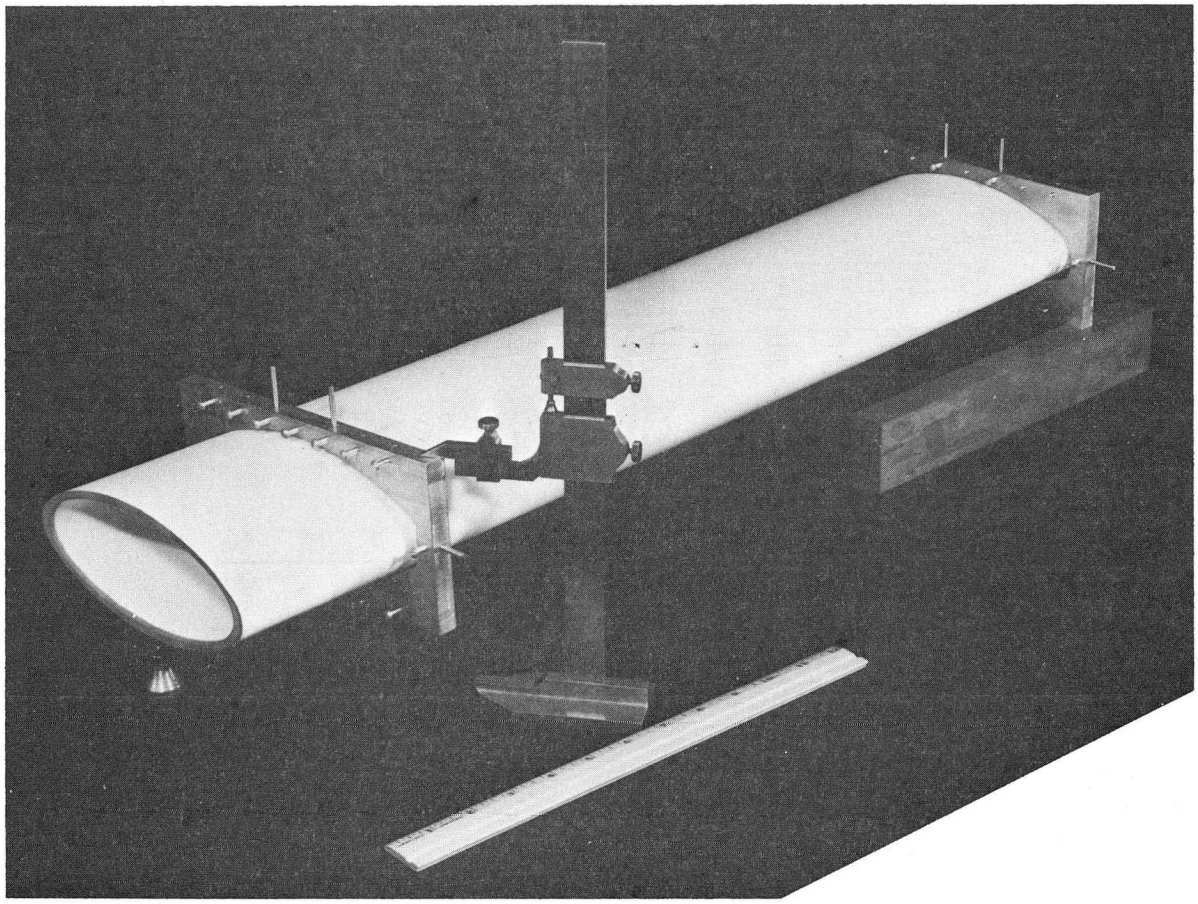

BBH 673-94

Fig. 3

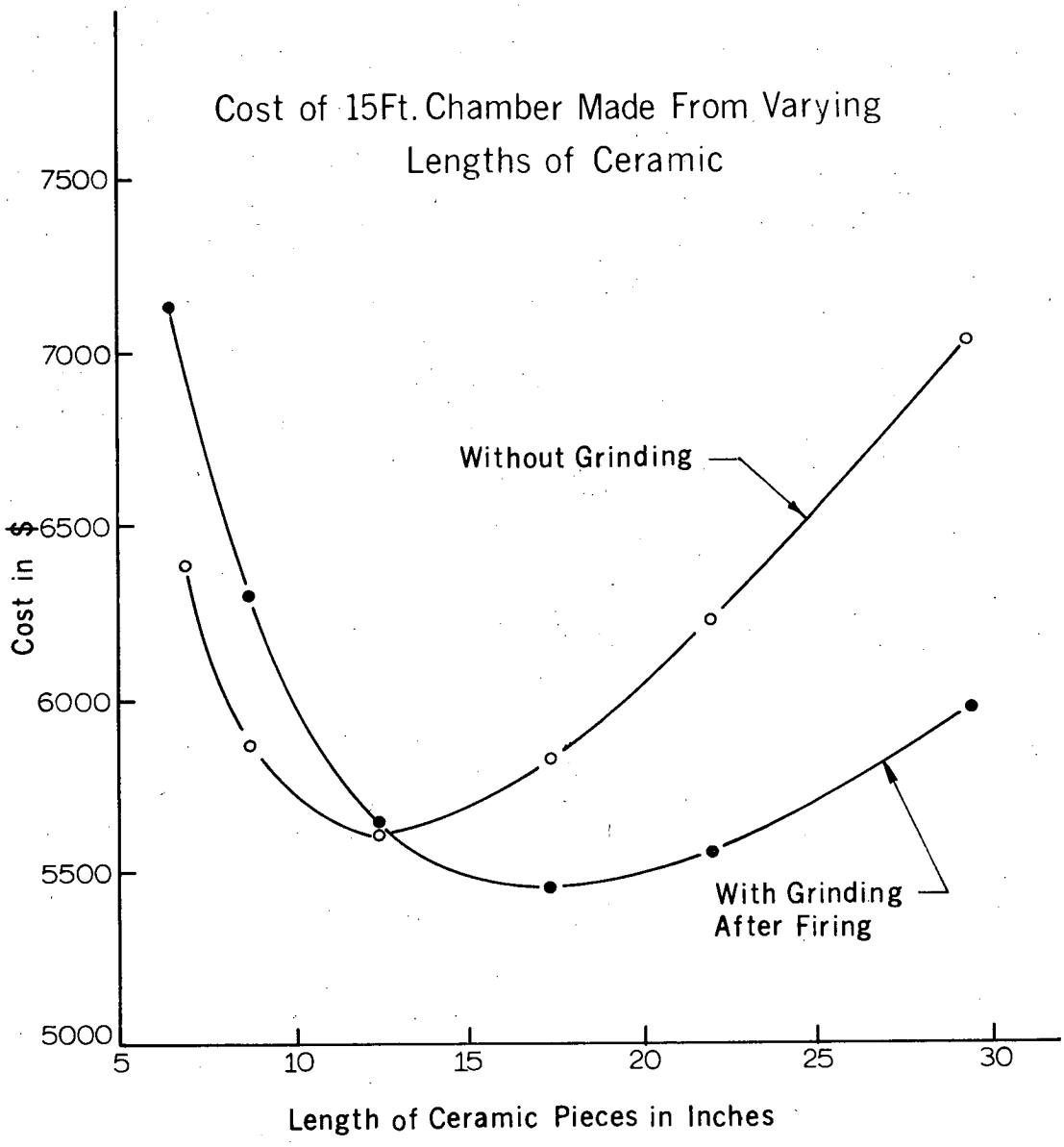

fig. 4

XBL 672-566

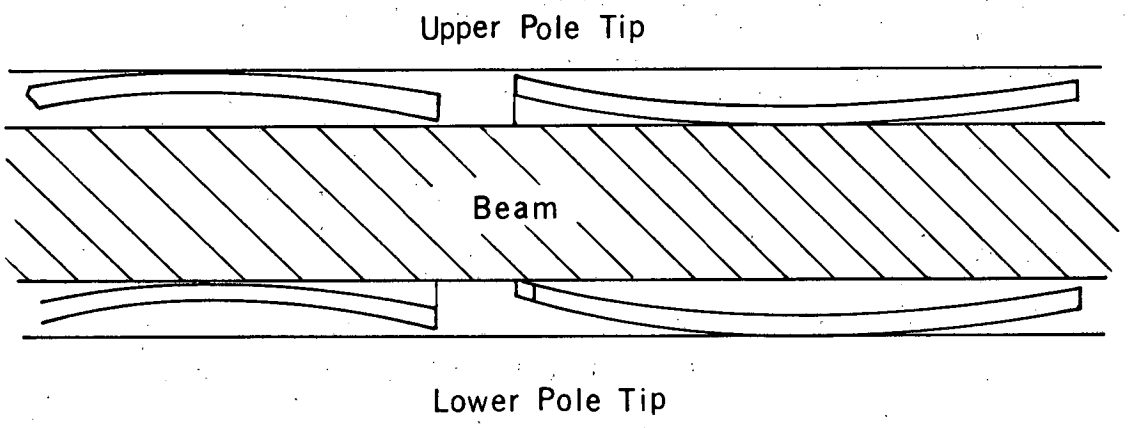

Typical Joint Alignment Problem

fig. 5

XBL 672-560

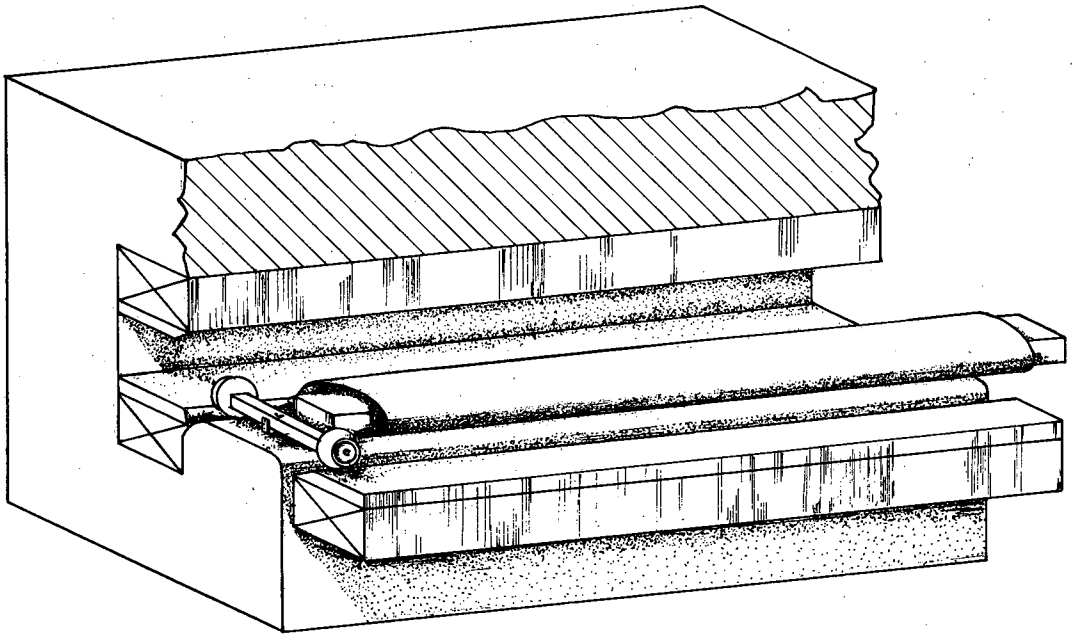

Installation of Vacuum Chamber into Magnet Gap

XBL 672-559

Fig. 6

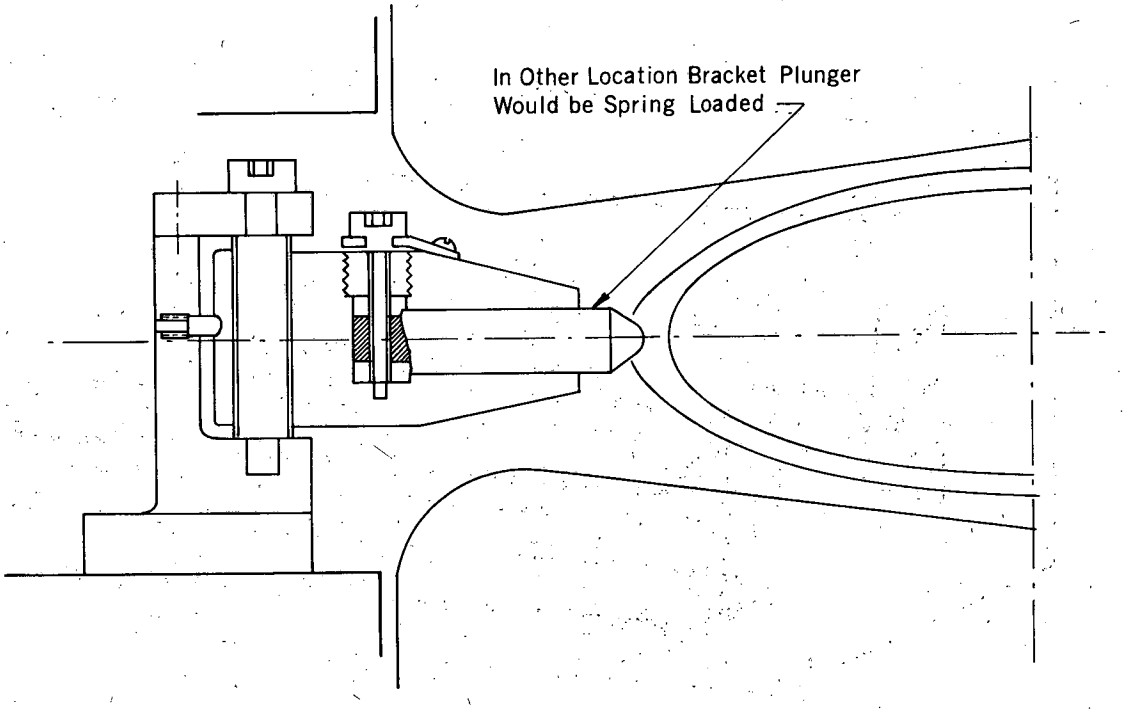

Method of Locating Vacuum Chamber in Magnet Gap

XBL 672-562

Fig. 7

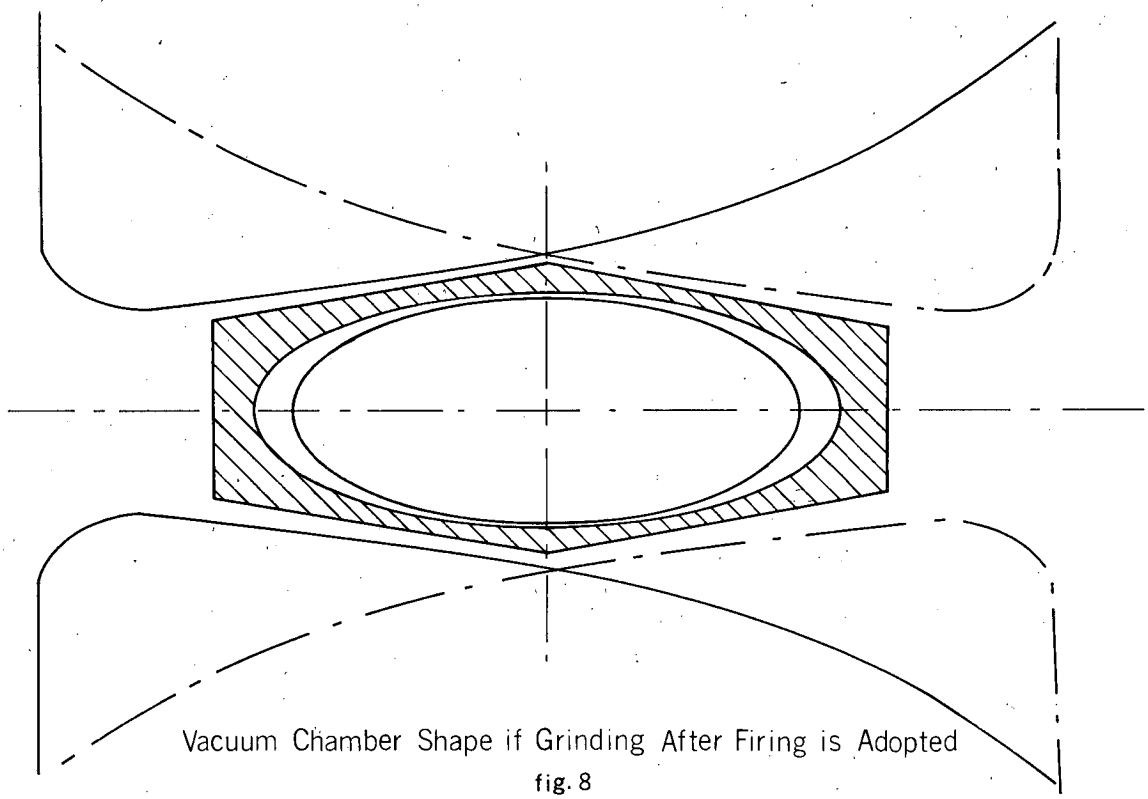

Vacuum Chamber Shape if Grinding After Firing is Adopted

fig. 8

XBL 672-565

This report was prepared as an account of Government sponsored work. Neither the United States, nor the Commission, nor any person acting on behalf of the Commission:

A. Makes any warranty or representation, expressed or implied, with respect to the accuracy, completeness, or usefulness of the information contained in this report, or that the use of any information, apparatus, method, or process disclosed in this report may not infringe privately owned rights; or

B. Assumes any liabilities with respect to the use of, or for damages resulting from the use of any information, apparatus, method, or process disclosed in this report.

As used in the above, "person acting on behalf of the Commission" includes any employee or contractor of the Commission, or employee of such contractor, to the extent that such employee or contractor of the Commission, or employee of such contractor prepares, disseminates, or provides access to, any information pursuant to his employment or contract with the Commission, or his employment with such contractor.