Presented at the annual meeting of the
Optical Society of America, San Francisco,
October 18 through 21, 1966

UCRL-17259
Preprint

UNIVERSITY OF CALIFORNIA

Lawrence Radiation Laboratory
Berkeley, California

AEC Contract No. W-7405-eng-48

BUBBLE CHAMBER OPTICS

I. Modification of Illumination System for 82-Inch Bubble Chamber
II. Alignment of Camera Port Windows

Duane U. Norgren

November 22, 1966

BUBBLE CHAMBER OPTICS*

Duane U. Norgren

Lawrence Radiation Laboratory
University of California
Berkeley, California

November 22, 1966

ABSTRACT

This report discusses how we made the decision for and some of the difficulties relating to the use of coat hanger retro-reflectors in converting a 72-inch to an 82-inch bubble chamber. It presents also a short method for determining alignment tolerances for camera port windows.

I. MODIFICATION OF ILLUMINATION SYSTEM FOR 82-INCH BUBBLE CHAMBER

The Lawrence Radiation Laboratory at Berkeley is engaged in a development program which will adapt the veteran 72-inch bubble chamber (Fig. 1) to future use at the Stanford two-mile linear accelerator. To increase production of stereo triads, the relatively slow gaseous expansion system is being discarded in favor of a faster piston system based on principles successfully incorporated in LRL 25-inch bubble chamber.

In the 25-inch chamber (which is cylindrically shaped), the optical condenser window acts as a short-stroke piston. The window assembly is attached to the chamber body by means of a stainless steel bellows having only one tire-like convolution, which has come to be known as the Omega bellows. Figure 2 is a diametral schematic section of the 25-inch chamber.

In the adaptation of the Omega bellows and piston to the 72-inch chamber, an additional 10-inch of chamber length can be made available--due to the elimination of piping formerly required. Thus the slow (5-sec pulse rate) 72 inch machine is destined to become a rapid-pulsing ($\approx$ 1 sec) 82-inch chamber, but not without the introduction of major illumination problems.

Instead of Scotchlite--ably described by Dr. Welford[1] a few minutes ago--the 72-inch Bubble Chamber employs an array of coat hangers (retro-reflectors) for illumination.[2] These cover the visible bottom of the chamber. This system has functioned well for nearly 8 years and will be retained in the conversion if possible. Figure 3 shows such an array installed in the 15-inch bubble chamber (no longer in operation at LRL). The bottom of the 82-inch chamber is to be a variable-stroke piston with accelerations to 50 G: physical integrity of attached coat hangers is jeopardized. Indeed, prototype reflectors failed when subjected to considerably smaller forces.

We believe that coat hangers can be used successfully in this way. Three significant changes have been made to reduce the tendency of the curved plastic coat hangers to whip, namely:

1. The cross section is relatively fatter and the area has been increased;

2. A lighter and stiffer plastic has been used;

3. The coat hangers are now supported at the middle as well as at the ends.

Samples have successfully withstood nearly 500 000 shake-table cycles at the specified acceleration when supported as indicated.

If experience with coat hangers is unsatisfactory, a Scotchlite system will then be installed. However, such a fundamental change in illumination (to the light-field mode) would lead to modifications in film processing, code displays, and measuring-equipment logic circuits; hence our desire to continue using the present dark-field system.

II. ALIGNMENT OF CAMERA PORT WINDOWS

A. Rationale

Proper relative alignment of the various optical components not only simplifies the data-reduction program, but is necessary for photogrammetric accuracy.

Most bubble chambers have photographic systems comprised of three basic component groups, namely:

1. The chamber with large front window,

2. Camera ports (small windows),

3. Camera(s).

It is customary to align the camera(s) to the main chamber window. Several small windows or camera ports, interposed between the stereo objective lenses and the bubble chamber, seal the vacuum (or other) tank which surrounds the bubble chamber.

It is generally recognized that the camera ports must be very flat and of excellent (Schlieren) quality; determination of necessary optical tolerances for the manufacture of these small windows is simple and straightforward.

Quantization of camera-port alignment tolerances, on the other hand, requires a slightly more subtle analysis, the mathematical mechanics of which are somewhat tedious. Because a chamber having these ports assembled to ordinary mechanical tolerances generally seems to perform adequately, many have been built without the benefit of a study of this interesting parameter.

Figure 4 is the result of such an analysis of the 25-, 72-, and 82-inch bubble chambers. By coincidence, the determining parametric ratios of those three bubble chambers are essentially the same, so that one specific solution is applicable to all. I suspect that many of the medium size bubble chambers throughout the scientific community will approximate these same parameters, namely:

1. Stereo base/object distance = 0.25 to 0.35
2. Port thickness/stereo base = 0.1

A suitable tolerance on stereo base (b)--assuming a 3-μ image error to be acceptable--is 1 part in 10 000. As our chambers have stereo bases of about 50 cm, camera port tilts must disturb the effective entrance pupil spacings by no more than 0.05 mm.

Two classes of port misalignment must be considered. First, the small windows might be perfectly aligned parallel with each other, yet be tilted as a group with respect to the main window. This tilt, although probably random, could possibly occur only in the plane of one stereo pair. Second, the ports might be misaligned randomly, with one or two ports parallel to the main window.

Do the two classes of misalignment disturb the photogrammetry equally? The analysis indicates not. As shown in Fig. 4, the alignment of the ports with respect to each other is at least twice as critical as the alignment of the port system with respect to the chamber window. This is fortunate, because the ports are generally precision seated in a rigid plate close to the camera; in contrast, the position of the more-distant chamber window is determined by several intermediate components (some of which are at cryogenic temperatures), and is thus subject to relatively large displacements.

From the curves (Fig. 4), observe that tolerance in both cases decreases with increasing field angle, but the decrease is essentially linear in one case and exponential in the other.

Berkeley researchers have obtained better stereo fits with film from the 25-inch than from the 72-inch bubble chamber. Judging from Fig. 4, window misalignment may well be suspect: Note that tolerances for the smaller chamber are 40 to 50% greater.

B. Derivation of Curves

A schematic diagram (Fig. 5) was devised to assist in understanding the port misalignment problem, to minimize computation, and to aid in "bookkeeping" (I made the diagram big enough to record all necessary values adjacent to appropriate rays).

The two pairs of parallel lines represent surfaces of camera port windows. Since effect of port tilt is independent of the distance of the port from the lens, it was possible to show both tilted and parallel ports on the same diagram (Fig. 5). Rays drawn through pupil points 0, 1, and 2 (Fig. 5) represent chief rays through lens Z (Fig. 6), and rays through points 1, 2, and n (Fig. 5) may represent those through lenses X and Y (Fig. 6). By moving the pupil points exactly one stereo base b to the right, six values (enough to define the two curves) can be obtained by the solution of only seven refractions, whereas three times as many solutions might be necessary if angles were chosen arbitrarily.

In constructing a diagram such as Fig. 5, draw the left-hand ray vertically along the optical axis of pupil point zero. Angles $\theta_1, \theta_2, \ldots \theta_n$ should be selected (to nearest whole degree) to direct their rays to intersect ray zero at the appropriate chamber distance D.

Ray offset C after refraction through the window is calculated via Snell's refraction equation. The necessary algebraic computation as given in Fig. 5 is typical. By keeping port tilt ϕ to 1° or less, the cosine term may be neglected (cos 1° = 0.99982), thus simplifying problem solution. Actual port tilt must be kept well within 1°; thus the suggested procedure is valid. Another simplification is to calculate for unit port thickness t. The problem solution will then be "per (unit) thickness", and correction to actual port thickness made a final step.

In a particular solution, the diagram (Fig. 5) is used as follows: Assume that a value is to be determined for the effect of one tilted camera port at field angle θ_1. Subtract ray offset C_0 first from C_1, and then from C_1(tilted). The difference between the two differences represents the effective displacement of the pupil point due to assumed tilt. Then compare this displacement with the allowable displacement 0.0001 b, and tolerance derivative db on port misalignment for field angle θ_1 becomes

$$db_{\theta_1} = \frac{0.0001\ b}{C_1 - C_{1_{tilted}}} .$$

To solve for effect of misalignment with respect to main chamber window, use a similar procedure but change the final equation to

$$db_{\theta_1} = \frac{0.0001\ b}{(C_1 - C_0) - (C_1 - C_0)_{tilted}} .$$

The solution in general form will be

$$db_{\theta_n} = \frac{0.0001\ b}{(C_n - C_{n-1}) - (C_n - C_{n-1})_{tilted}} .$$

FOOTNOTE AND REFERENCES

*Work done under the auspices of the U. S. Atomic Energy Commission.

1. W. T. Welford, Current Problems in Bubble Chamber Optics, paper presented orally at the Annual Meeting of the Optical Society of American, San Francisco, October 1966.

2. Duane U. Norgren, Dark Field Illumination System, Patent 3,045,528, July 24, 1962.

FIGURE CAPTIONS

Fig. 1. Schematic of the optics system for the 72-inch bubble chamber.

Fig. 2. Schematic diametral section of the optics system for the 25-inch bubble chamber.

Fig. 3. Optical schematic and installation array of coat hangers in the 15-inch bubble chamber.

Fig. 4. Camera port alignment tolerance as a function of maximum semifield angle. Solid lines connect calculated points; dashed lines are extrapolations.

Fig. 5. Analysis diagram.

Fig. 6. Arrangement of pertinent optical elements, camera pupil points, ports, and main window.

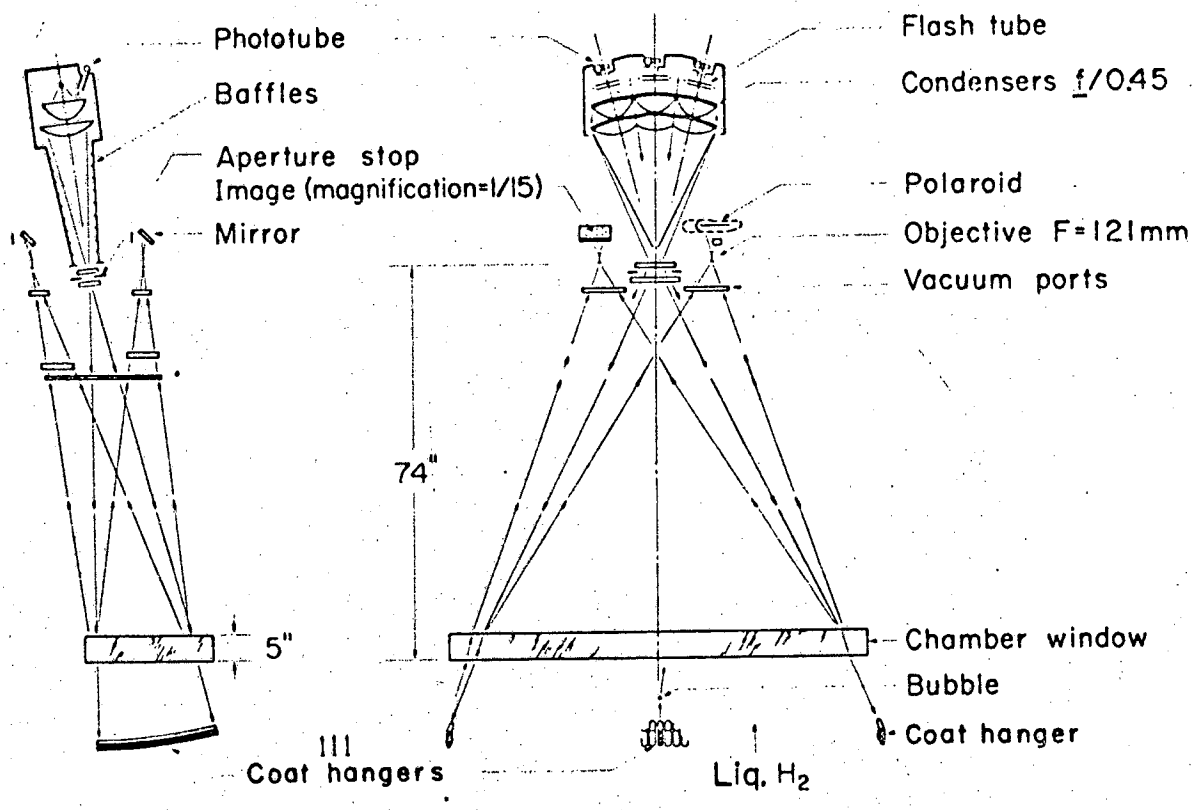
Phototube
Baffles
Aperture stop
Image (magnification=1/15)
Mirror
Flash tube
Condensers f/0.45
Polaroid
Objective F=121mm
Vacuum ports
74"
5"
Chamber window
Bubble
Coat hanger
Coat hangers
Liq. H_2

Fig. 1

MUB 261

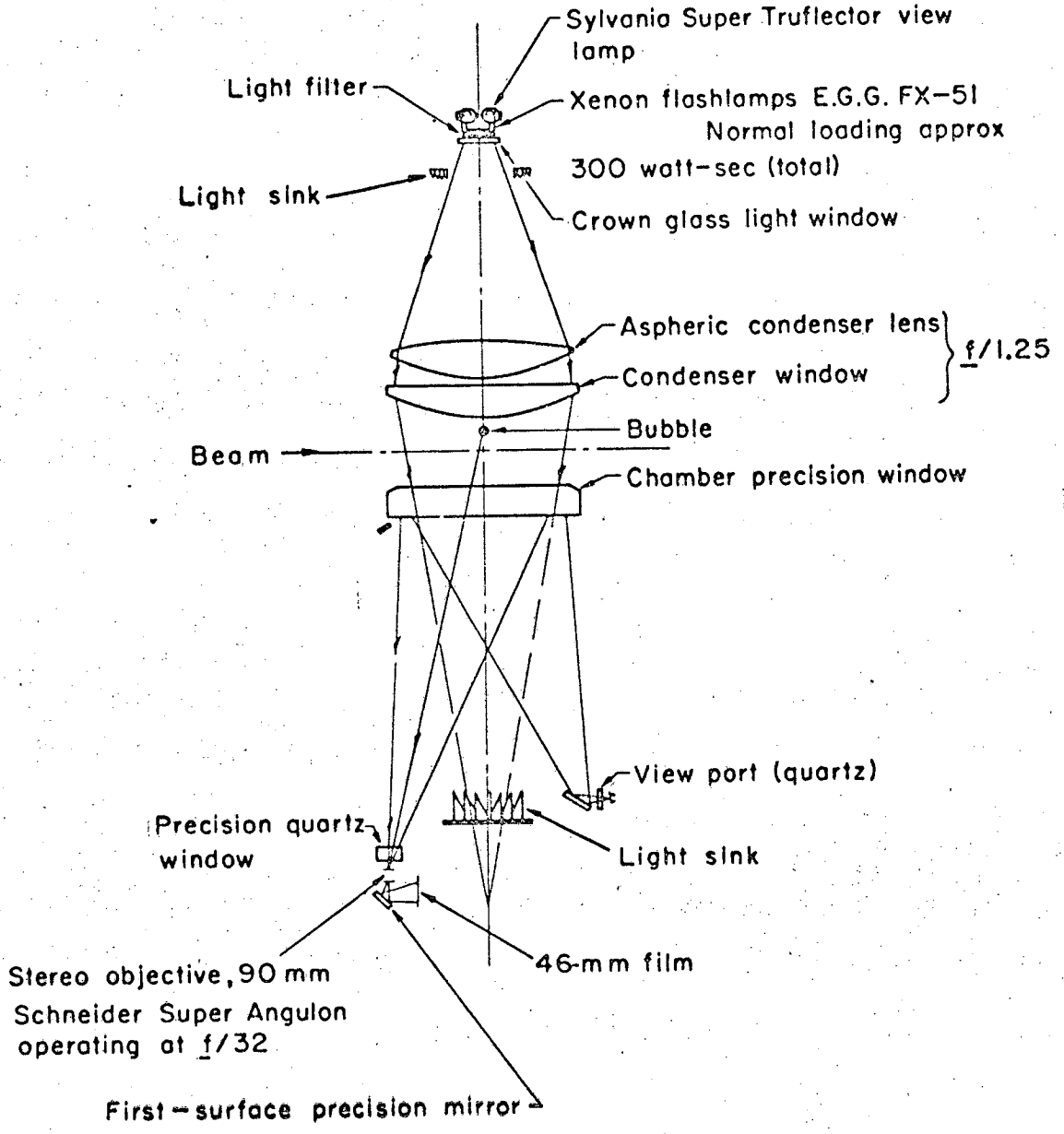

Fig. 2 MUB-3380

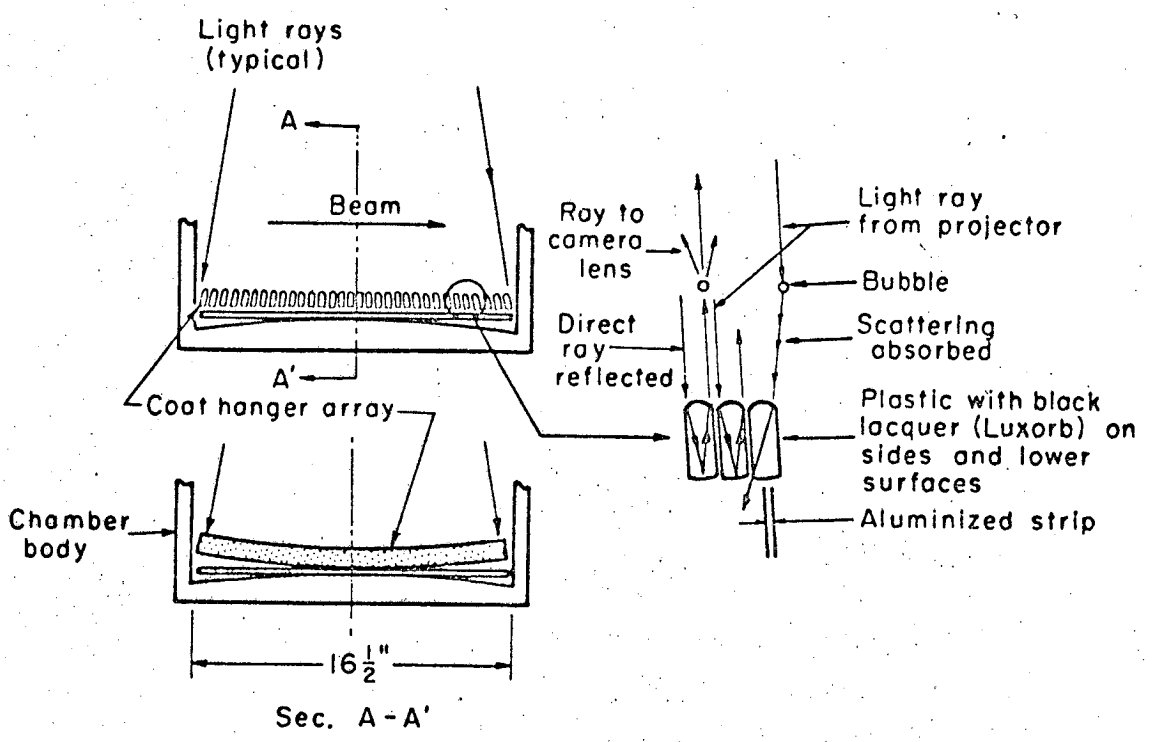

Fig. 3

MUB-13985

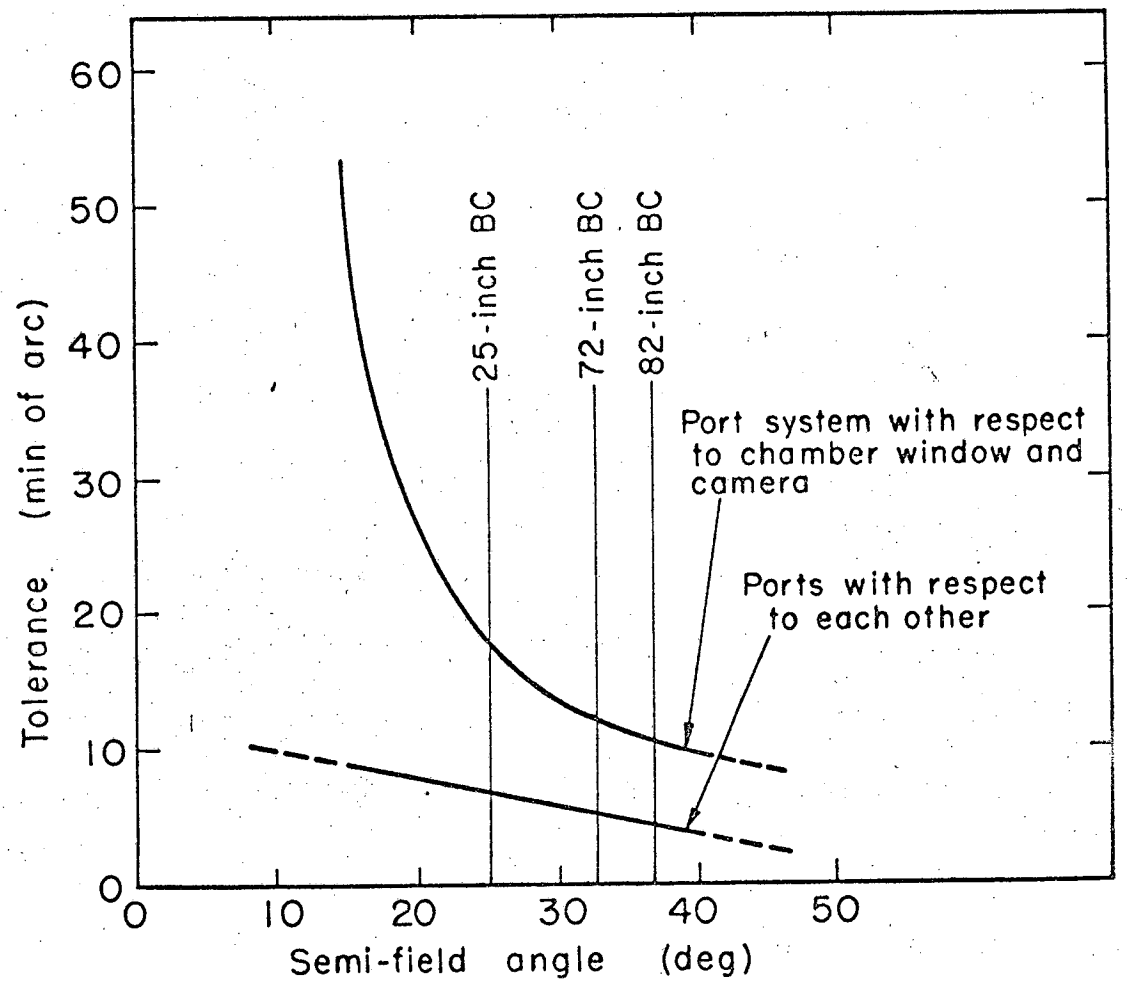

Fig. 4

MUB 13988

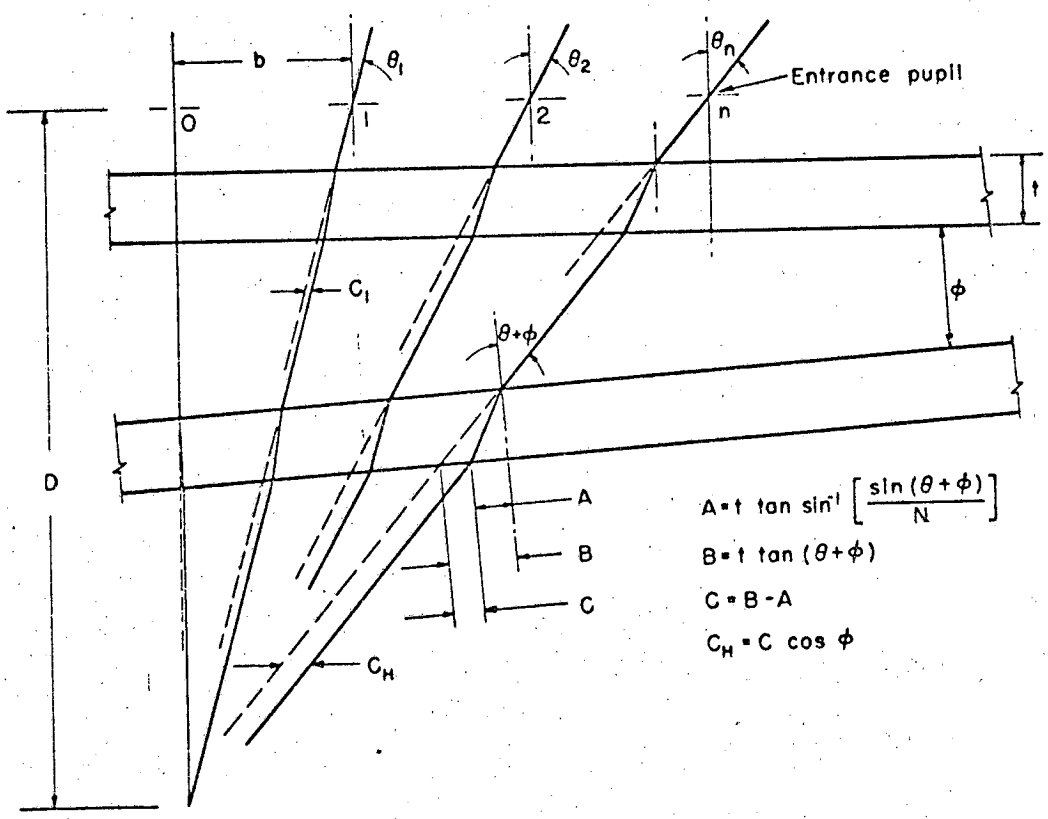

Fig. 5

MUB 13987

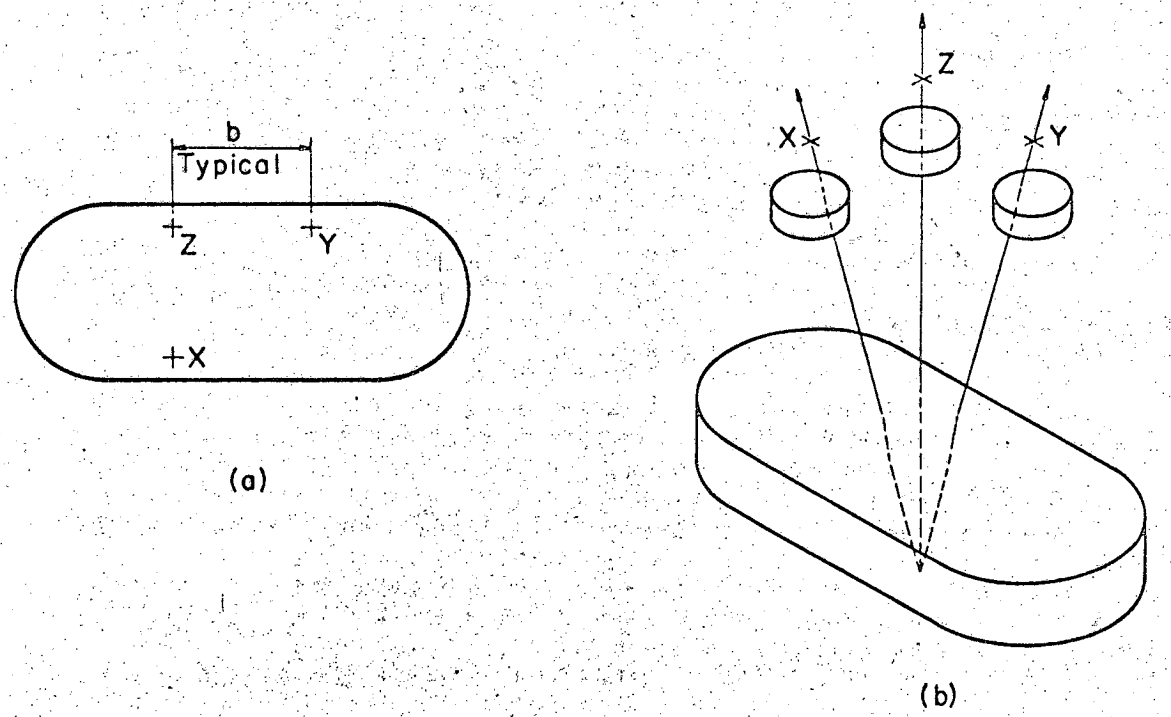

Fig. 6

MUB 13986

This report was prepared as an account of Government sponsored work. Neither the United States, nor the Commission, nor any person acting on behalf of the Commission:

A. Makes any warranty or representation, expressed or implied, with respect to the accuracy, completeness, or usefulness of the information contained in this report, or that the use of any information, apparatus, method, or process disclosed in this report may not infringe privately owned rights; or

B. Assumes any liabilities with respect to the use of, or for damages resulting from the use of any information, apparatus, method, or process disclosed in this report.

As used in the above, "person acting on behalf of the Commission" includes any employee or contractor of the Commission, or employee of such contractor, to the extent that such employee or contractor of the Commission, or employee of such contractor prepares, disseminates, or provides access to, any information pursuant to his employment or contract with the Commission, or his employment with such contractor.