UNIVERSITY OF CALIFORNIA
Radiation Laboratory

Cover Sheet
Do not remove

DECLASSIFIED

INDEX NO. UCRL 172
This document contains 81 pages
and 14 plates of figures.
This is copy 68 of 78. Series A

Issued to: Supe Div.

SECRET
Classification

Each person who received this document must sign the cover sheet in the space below.

| Route to | Noted by | Date | Route to | Noted by | Date |
|---|---|---|---|---|---|
| | Wilson | 11/16/48 | | | |
| | Slater | 3/19/51 | | | |
| | | | | | |
| | | | | | |
| | | | | | |
| | | | | | |
| | | | | | |
| | | | | | |
| | | | | | |
| | | | | | |
| | | | | | |
| | | | | | |
| | | | | | |
| | | | | | |
| | | | | | |

## DISCLAIMER

This document was prepared as an account of work sponsored by the United States Government. While this document is believed to contain correct information, neither the United States Government nor any agency thereof, nor the Regents of the University of California, nor any of their employees, makes any warranty, express or implied, or assumes any legal responsibility for the accuracy, completeness, or usefulness of any information, apparatus, product, or process disclosed, or represents that its use would not infringe privately owned rights. Reference herein to any specific commercial product, process, or service by its trade name, trademark, manufacturer, or otherwise, does not necessarily constitute or imply its endorsement, recommendation, or favoring by the United States Government or any agency thereof, or the Regents of the University of California. The views and opinions of authors expressed herein do not necessarily state or reflect those of the United States Government or any agency thereof or the Regents of the University of California.

Special Review of Declassified Reports
Authorized by USDOE JK Bratton
Unclassified NW, PL 22002 May 79

DOCUMENT PROPERLY DECLASSIFIED
Authorized Derivative Classifier Date 8-16-79
By Date 1-17-80

UCRL 172

Chemistry-Transuranic Elements

SECRET

DECLASSIFIED

UNIVERSITY OF CALIFORNIA

Radiation Laboratory

CLASSIFICATION CANCELLED
BY AUTHORITY OF THE DECLASSIFICATION BRANCH USAEC per ITD 1113
BY B. Fosbett 3-3-56
SIGNATURE OF THE PERSON MAKING THE CHANGE DATE

Contract No. W-7405-eng-48 and 48B

# CHEMISTRY DIVISIONS

# QUARTERLY REPORT

June - August, 1948

CAUTION

This document contains information affecting the National Defense of the United States. Its transmission or the disclosure of its contents in any manner to an unauthorized person is prohibited and may result in severe criminal penalties under applicable Federal laws.

October 1, 1948

Berkeley, California

RESTRICTED DATA

This document contains restricted data as defined in the Atomic Energy Act of 1946.

DECLASSIFIED



SECRET



| STANDARD DISTRIBUTION: Series A | Copy Numbers |
|---|---|
| Argonne National Laboratory | 1-10 |
| Atomic Energy Commission, Washington | 11-12 |
| Brookhaven National Laboratory | 13-20 |
| General Electric Company | 21-24 |
| Hanford Directed Operations | 25-31 |
| Iowa State College | 32 |
| Kellex Corporation | 33-34 |
| Los Alamos | 35-37 |
| Naval Radiological Defense Laboratory | 38 |
| NEPA | 39 |
| New York Directed Operations | 40-41 |
| Oak Ridge National Laboratory | 42-49 |
| Patent Advisor, Washington | 50 |
| Technical Information Division, ORDO | 51-65 |
| University of California Radiation Laboratory | |
| Information Division | 66-68 |
| I. Perlman | 69 |
| B. Tolbert | 70 |
| W. Latimer | 71 |
| E. Segrè | 72 |
| J. G. Hamilton | 73 |
| E. O. Lawrence | 74 |
| Patent Department | 75 |
| University of Rochester | 76-77 |
| Office of Chicago Directed Operations | 78 |

INFORMATION DIVISION
Radiation Laboratory
Univ. of California
Berkeley, California

DECLASSIFIED



TABLE OF CONTENTS

| Title | Page |
|---|---|
| I QUARTERLY REPORT. PROJECT 48 | |
| A. Chemistry of the Actinide and Lanthanide Elements. Nuclear Properties and Nuclear Transformations | |
| Oxidation-Reduction Equilibria of the Lanthanide and Actinide Elements. | 4 |
| X-Ray Diffraction Studies of Praseodymium Oxides and of Solid Solutions of Ceric Oxide with Trivalent Rare Earth Oxides. | 10 |
| Measurements on the Fluorides and Metals of Rare Earth and Actinide Elements. | 17 |
| Products of the Dissolution of Thorium Metal in HCl. | 18 |
| Absorption Spectra of the Aqueous Tripositive Ions of the Lanthanide and Actinide Elements. | 19 |
| Hafnium-Zirconium Separation. | 26 |
| Ion Exchange Separation of Heavy Elements. | 27 |
| Mass Spectrograph for Identification of Radioactivities. | 28 |
| New Artificial Collateral Decay Chains of the Heavy Elements. | 31 |
| Neutron Deficient Heavy Isotopes. | 36 |
| Preparation of Light Neptunium Isotopes. | 37 |
| The Isotope $Cm^{243}$. | 38 |
| Long-Lived Isotopes of Bismuth and Lead. | 39 |
| Neutron Deficient Bismuth Alpha-Emitters. | 40 |
| High Energy Spallation and Fission Products of Uranium. | 41 |

DECLASSIFIED



Table of Contents (Cont'd)

| Title | Page |
|---|---|
| The Fission of Bismuth with High Energy Particles. | 43 |
| Radioactive Properties of the Heavy Rare Earths and Neighboring Elements. | 45 |
| Nuclear Reactions of Arsenic with 190 Mev Deuterons. | 48 |
| High Energy Spallation Products of Copper. | 51 |
| Relative Yields of $Mn^{52}$ and $Mn^{56}$ from 190 Mev Deuterons on Elements 25 to 38. | 54 |
| Abnormal Increase in Atomic Number in Nuclear Reactions. | 56 |
| B. Chemistry of Astatine and the Preparation of Certain Compounds. | |
| Chemistry of Astatine. | 58 |
| C. Bio-Organic Chemistry. | |
| Synthetic and Experimental Chemistry. | 62 |
| Biological Chemistry. | 67 |
| Photosynthetic Chemistry. | 69 |
| II QUARTERLY PROGRESS REPORT. PROJECT 48B. | |
| A. Metals and High Temperature Thermodynamics. | 72 |
| B. Basic Chemistry, Including Metal Chelates. | 75 |
| C. Engineering Development of Plutonium Separation. | 78 |

DECLASSIFIED



SECRET

# I QUARTERLY PROGRESS REPORT. PROJECT 48

## A. Chemistry of the Actinide and Lanthanide Elements.

### Nuclear Properties and Nuclear Transformations.

I. Perlman

### Oxidation-Reduction Equilibria of the Lanthanide and Actinide Elements.

B. B. Cunningham and Co-workers*

The work described below has been carried out primarily for the purpose of investigating oxidation-reduction equilibria between the tripositive and higher or lower oxidation states of various members of the lanthanide and actinide series of elements. Aside from the general scientific interest of such studies the data may be expected to be of value in the prediction of the relative stability of the various oxidation states of the elements beyond curium.

In these investigations data of three kinds have been sought:

1. Bracketing data from experiments in which it is observed that the oxidation-reduction reaction proceeds quantitatively in one case and does not proceed appreciably in the second case, the conditions being chosen so that the equilibrium constant for the reaction is clearly defined as being between a maximum and a minimum value.

2. Thermochemical data to establish $\Delta H$ values for given oxidation-reduction reactions, and from which $\Delta F$ values may be approximated by additional calculations.

3. Measurements of equilibrium constants, from which $\Delta F$ values may be calculated, directly.

### Chemistry of Americium--Stability of the Dipositive State. R. Lohr.

The stability of the dipositive state of americium is of exceptional interest in that this state may be assumed to be isoelectronic with the tripositive state of curium and the tetrapositive state of element 97. The stability of the dipositive state of americium is therefore a rough measure of the stability of the half completed 7f subshell.

It has been reported previously by S. Fried[1] of the Argonne National Laboratory that the reaction:

$$AmO_2 + H_2 = AmO + H_2O$$

*The co-author of each section is indicated after the title of the section.

proceeds substantially to the right at temperatures in the neighborhood of 800°C. In Fried's experiment the AmO was obtained in the form of a black sublimate and its identification was based upon x-ray diffraction investigation by Dr. W. H. Zachariasen. L. B. Asprey and Cunningham were unable to find evidence for the reduction of $10^{-4}$ M solutions of Am(III) in the presence of 0.1 M KCl supporting electrolyte and $10^{-4}$ M $H^+$, using a dropping mercury electrode and the Sargent model X1 polarograph. They concluded that the formal oxidation-reduction potential for the Am(II) = Am(III) + $e^-$ couple is more positive than +0.9 v.

Recent attempts by H. Lohr of this laboratory to repeat Fried's observation have yielded no positive evidence for the formation of AmO under the conditions given by Fried.

The apparatus used by Lohr is shown schematically in Fig.1.

The experiments were carried out as follows.

A 10 microgram sample of americium, in the form of a pellet of the hydrous oxide ($Am_2O_3 \cdot XH_2O$) was introduced into a small (2 mm I.D.) beryllia crucible which was placed inside a 5 mm I.D. quartz tube, and this, in turn, put inside a 12 mm I.D. quartz tube connected to a supply of dry hydrogen and/or ammonia. A resistance furnace outside the larger quartz tube was used to heat the sample to the desired temperature. Attempts to reduce the oxide to AmO were then carried out by passing hydrogen or an $NH_3$-$H_2$ mixture over the hot sample.

Runs were made at various temperatures from 500° to 950°C. At the end of each run the inside wall of the inner quartz tubing (which projected well beyond the end of the furnace) was examined for alpha-activity. In no case was any significant amount of alpha-activity found in the tube.

It was concluded that a volatile compound of americium is not formed by the action either of ammonia or $H_2$ on americium oxide in the temperature range of 500°-950°C.

The black americium compound remaining in the crucible was submitted to Dr. D. H. Templeton for identification by x-ray diffraction analysis. The patterns obtained were so poor, however, that they did not permit identification of the material.

Chemistry of Samarium--Microchemical Scale Preparation of Samarous Chloride. H.R.Lohr.

A standard method of preparing the more difficultly obtainable dipositive compounds of the rare earths is that of reduction of the anhydrous trihalides with $H_2$ or $NH_3$.[2,3] Because of the great stability of the oxychloride the preparation of pure samarium trichloride demands rigorous exclusion of water vapor and oxygen from the system. The reaction, even on the macro-scale, is recognized as being one of great technical difficulty. By suitable design of apparatus, however, it has been possible to obtain fair yields of $SmCl_2$ by this method on the fifty microgram scale, and hence, to demonstrate that the present apparatus is suitable for a reliable investigation of the reaction of $AmCl_3$ with $H_2$ or $NH_3$, using amounts of americium currently available.

The apparatus used is illustrated in Fig. 2. The procedures used to prepare anhydrous $SmCl_3$ and to reduce this to $SmCl_2$ were as follows:

A. Preparation of $SmCl_3$. Fifty micrograms of $Sm_2O_3$ was introduced into a small gold boat and dissolved in about 20 microliters of 12 M HCl. The solution was heated to dryness under a heat lamp to yield hydrated samarium trichloride. This material was then placed in the quartz tube of the apparatus shown in Fig. 2. A slow stream of anhydrous HCl was then passed over the sample which was heated according to the following schedule: room temperature to 90°, ten minutes; 90°, one hour; 90° - 130°, ten minutes; 130°, one hour; 130° - 250°, twenty minutes; 250°, five minutes.

The end of the capillary was then sealed off, the system evacuated, and the magnetic pusher manipulated to push the gold boat into the vertical section of the quartz tube, thus spilling the contents of the boat into the capillary tube. The quartz capillary was then sealed off about one cm. above the sample.

Material prepared in this way was submitted to Dr. D. H. Templeton for identification by x-ray diffraction analysis. The sample was found to be pure $SmCl_3$ with the hexagonal $UCl_3$ structure and lattice constants:

$$a_o = 7.377 \pm 0.006 \text{ A}$$
$$\text{l.c.} \rightarrow c_o = 4.159 \pm 0.004 \text{ A} \qquad (CuK_\alpha = 1.542 \text{ A})$$

It is interesting to note that although the color of $SmCl_3$ is reported in the literature to be yellow-green all samples prepared in this laboratory have appeared to be either white or gray.

B. Preparation of $SmCl_2$. A sample of $SmCl_3$ was prepared according to the procedure outlined above except that the product was left in place in the gold boat.

The system was then flushed with pure dry argon and evacuated to remove the last traces of HCl. The sample was heated to 500°C and anhydrous ammonia admitted to the system. (At temperatures below 500°C ammoniates are formed.) The end of the quartz capillary was reopened and a slow stream of anhydrous $NH_3$ (one atmosphere pressure) passed over the sample for a period of 13 hours. Finally the temperature was raised rapidly to 600°C and maintained at this level for 80 minutes. Observation with a low power microscope showed the contents of the boat to be of a uniform gray color at this point in the procedure.

The capillary was then sealed at the end, the contents of the boat dumped into it, the system evacuated and the capillary sealed off above the sample.

When the sample fell into the capillary it broke into smaller fragments, the inner portions of which were observed to be of a deep red color. The sample was submitted to the x-ray diffraction group working under Dr. D. H. Templeton. Diffraction analysis showed that the sample consisted of two phases in about equal proportions. One of these phases was identified as $SmCl_2$, orthorhombic and isomorphous with $PbCl_2$. The second phase was ~~cubic~~ tetragonal SmOCl, similar to other rare earth oxychlorides.

Chemistry of Europium--Preparation of $EuCl_2$. H. R. Lohr.

Europous chloride was prepared by a procedure similar to that used for the preparation of $SmCl_2$. Its structure was determined by the x-ray diffraction group and found to be of the $PbCl_2$ type.

Chemistry of Praseodymium.

A. Preparation of $Pr_2O_3$ and $PrO_2$ in a form suitable for measuring their heats of solution. LeRoy Eyring. Existing thermochemical data on the rare earth compounds is fragmentary and much of it is of questionable accuracy. Exact data are needed for a better understanding of the reactions of the rare earth compounds. In particular, data on the non-tripositive compounds are needed for the estimation of oxidation-reduction equilibria.

In this connection the praseodymium-oxygen system is of special interest in that it appears to bear a rather close resemblance to the americium-oxygen system and it may reasonably be expected that techniques developed for thermochemical measurements on praseodymium oxides will be more or less directly applicable to americium oxides.

The calorimeter available for these studies is of the adiabatic non-differential type. Accurate values for heats of solution can be obtained only on compounds which dissolve fairly rapidly (i.e. in about ten minutes or less). Consequently material suitable for calorimetric runs must not only be of known composition and crystal structure, but must also be readily soluble.

Samples of $Pr_2O_3$ and $PrO_2$ which appear to meet these requirements have been prepared as indicated below. The apparatus is illustrated in Fig. 3. In these studies particular attention has been paid to the purity of the praseodymium compounds used. All results refer either to a sample of Johnson Matthey praseodymium oxide which was shown by spectrographic analysis to contain no impurities other than 0.4% Nd, or else to this same material after separation of the neodymium by means of a cation exchange column of Dowex 50.

B. Preparation of $Pr_2O_3$. A summary of the methods of preparation and solubility characteristics of samples of $Pr_2O_3$ prepared in different ways is given in Table I.

Preparation No. 4, made by reduction of $Pr_6O_{11}$ with $H_2$ (1/3 atm.) at 500°C yielded material most suitable for measurements of the heat of solution of the C type of $Pr_2O_3$. It would appear to be possible to get fairly accurate measurements on the A type sesquioxide also by using material obtained by vacuum decomposition of $Pr_6O_{11}$ at 1000°C.

C. Preparation of $PrO_2$. Ignition in air of $Pr(C_2O_4)_3$, $Pr_2(CO_3)_3$, $Pr(OH)_3$, etc. at temperatures in the range of 600°-800°C yields a mixed oxidation state oxide of praseodymium whose composition is represented rather accurately by the empirical formula $Pr_6O_{11}$. Treatment of this material or of $Pr_2O_3$ with atomic oxygen or with $NO_2$ at moderate temperatures is reported to yield $PrO_2$.[4] Experiments in this laboratory indicate incomplete conversion of $Pr_6O_{11}$ to $PrO_2$ on treatment with ozone at 200°C or with $NO_2$ at 450°C.

Table I

Methods of Preparation and Solubility Characteristics of Various Samples of $Pr_2O_3$

| Preparation | Starting Material | Reductant | Final Material | Temp. °C | Pressure | Time (Min.) | Solubility |
|---|---|---|---|---|---|---|---|
| 1 | $Pr_6O_{11}$ | | $Pr_2O_3$, type A (hexagonal) | 1000 | ca. $10^{-5}$ | 60 | Soluble < 10 min. 1.5 M HCl |
| 2 | $Pr_6O_{11}$ | | $Pr_2O_3$, type A (hexagonal) | 1000 | ca. $10^{-5}$ | 30 | soluble < 10 min. 1.5 M HCl |
| 3 | $Pr(OH)_3$ | | | 1000 | ca. $10^{-5}$ | | Partially insoluble. |
| 4 | $Pr_6O_{11}$ | $H_2$ | Numerous samples all $Pr_2O_3$ Type C (cubic) | 500 | 1/3 atm. $H_2$ | 20 | Soluble rapidly in dilute acid. |
| 5 | $Pr_6O_{11}$ | $H_2$ | Type A (hexagonal) | 1000 | 1/3 atm. $H_2$ | 220 | Soluble in dilute acid. |

Quantitative conversion of $Pr_2O_3$ or $Pr_6O_{11}$ to $PrO_2$ has been obtained, however, by heating these oxides with oxygen in a sealed bomb at $O_2$ pressure of from 50 - 300 atmospheres and temperatures of 100°-750°C. The apparatus used is illustrated in Fig. 4.

In a typical run a sample of $Pr_6O_{11}$ was placed in the thick-walled quartz capillary which was then filled with a known volume of liquid oxygen calculated to give a pressure of oxygen of about 100 atmospheres when heated. The quartz tube was carefully sealed, and inclosed in the heavy steel jacket. The assembly was heated in a furnace to the desired temperature and for the desired length of time. At the end of the run the apparatus was cooled to room temperature, the bomb removed and chilled by liquid nitrogen, and carefully opened. The oxygen was allowed to evaporate slowly and the praseodymium oxide was then removed. This material was carefully examined microscopically for homogeneity. Samples were submitted to D. H. Templeton for examination by x-ray diffraction methods.

A number of experiments of this kind were performed, with the following results. At 200°C the reaction did not proceed at an appreciable rate, but at 250°C the reaction appeared to be complete in about 72 hours. The resulting material dissolved fairly readily in 1.5 M HCl. At higher temperatures (300°-750°C), the

$PrO_2$ is obtained in this way was difficultly soluble.

It is interesting to note that in all cases in which the $Pr_6O_{11}$ phase has been formed, either in the presence or absence of a separate $PrO_2$ phase, its lattice constant has been essentially invariant. Thus in these various experiments there has been no evidence of solid solution formation in the range $Pr_6O_{11}$-$PrO_2$.

D. Chemistry of Praseodymium--Equilibria in the Praseodymium-Oxygen System. L. B. Asprey. An apparatus has been constructed for the investigation of the equilibria between oxygen and the praseodymium oxides, both as a function of temperature and as a function of the composition of the oxide system. These data will not only supplement the data obtained by calorimetric measurements but will be particularly suitable for a determination of the ranges of solid solution formation of the various oxides. The apparatus shown in diagrammatic form in Fig. 5 has been designed for work on the microgram scale and will thus be suitable for an investigation of the americium-oxygen system.

The characteristics of the apparatus are as follows: The oxide under investigation is placed in the small platinum bucket which is suspended from the free end of the quartz fiber balance. (The beam of the balance consists of a fiber about 10 cm. in length and 0.1 mm. in diameter.) The bucket is then surrounded with a 1.5 cm diameter tube of 5 mil platinum foil and the system filled with pure argon containing a known pressure of oxygen. The pressure of oxygen in the system is regulated by passage of the argon over a $Cu_2O$-CuO mixture heated to a known temperature. The oxide in the bucket is heated mainly by radiation from the surrounding platinum tube which is maintained at the desired temperature by means of a high frequency induction coil. The temperature of the oxide is determined by means of a thermocouple placed just below the bottom of the bucket. Gain or loss of weight by the oxide is measured by following changes in the position of the free end of the fiber by means of a microscope equipped with a filar micrometer. Compensation for expansion or contraction of the supporting apparatus is made by means of a similar balance loaded with an inert substance. Measured changes in the position of the fiber are converted to weight changes by use of a calibration factor previously determined for the balance. The sensitivity of the apparatus is approximately $\pm$ 1 μg.

Equilibrium values under a given set of conditions are determined by repeated treatment of the sample to these conditions until no further changes in weight occur.

Preliminary runs with praseodymium oxide have shown that the apparatus is suitable for an investigation of the equilibrium pressures of oxygen within the range of composition $Pr_2O_3$-$Pr_6O_{11}$.

---

1 S. Fried, private communication
2 Matignon and Cazes, Comp. Rend. 142, 83 (1906)
3 Jantsch, Ruping and Kunze, Z. Anorg. Allgem. Chem. 161, 210 (1927)
4 Gruen and Katz, Argonne National Laboratory Report ANL-4143, p 22 (April 1948).

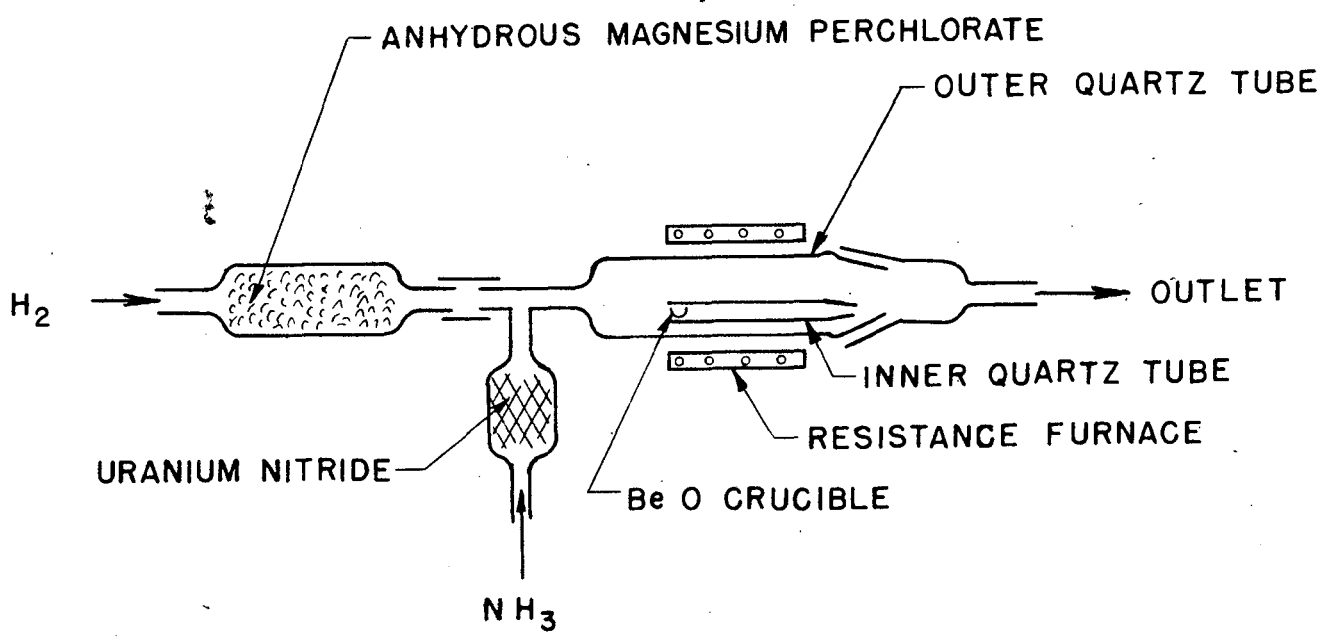


Fig. 1

Apparatus Used in the Attempted Production of AmO

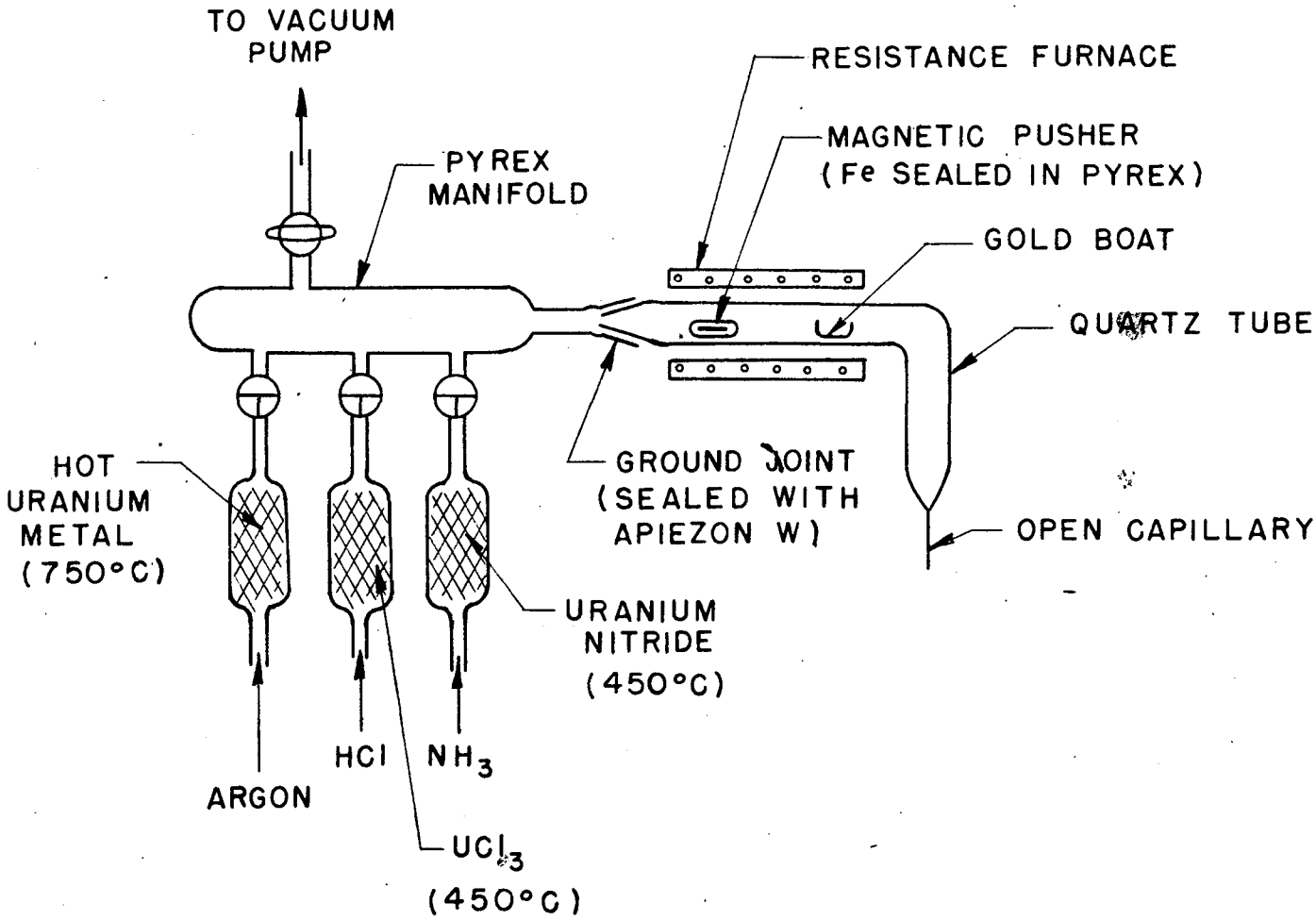


Fig. 2

Apparatus Used for the Preparation of $SmCl_2$.

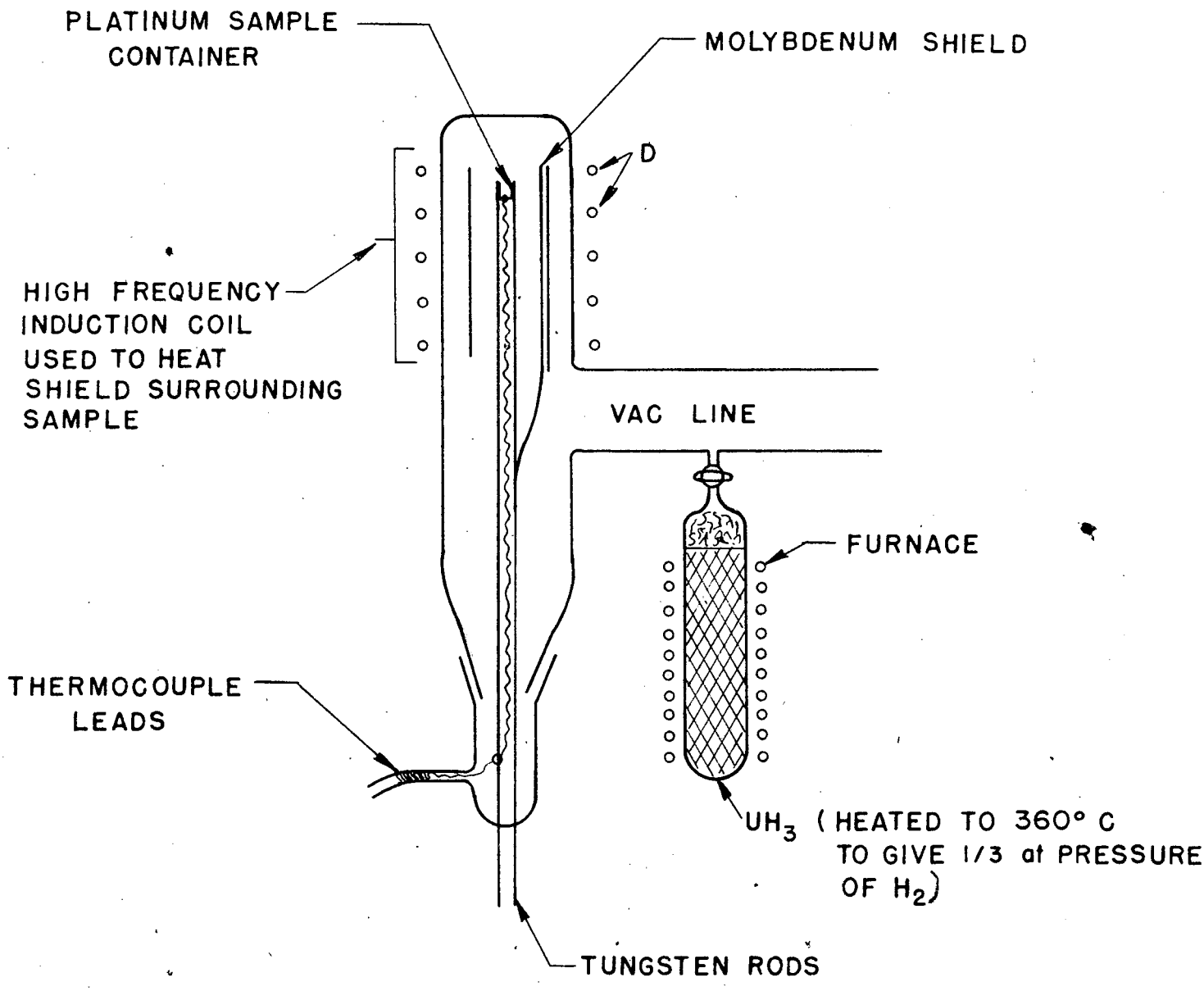


Fig. 3

Cross Section of Apparatus for the Preparation of $Pr_2O_3$.

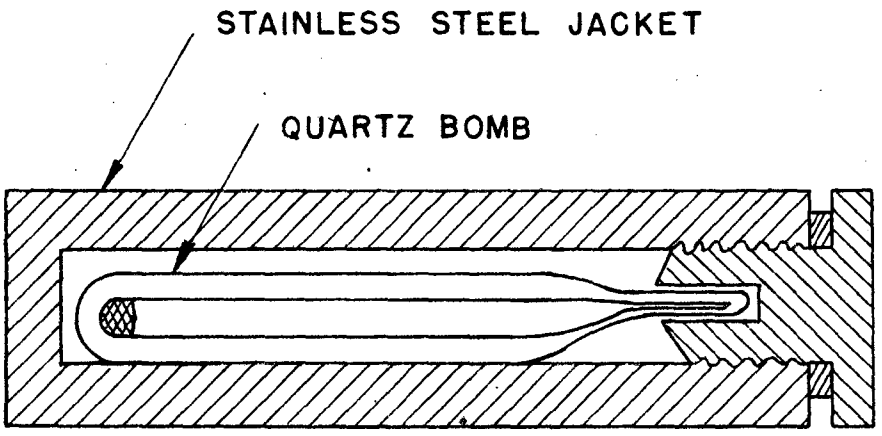


Fig. 4

Quartz Bomb and Jacket Used for the Preparation of $PrO_2$.

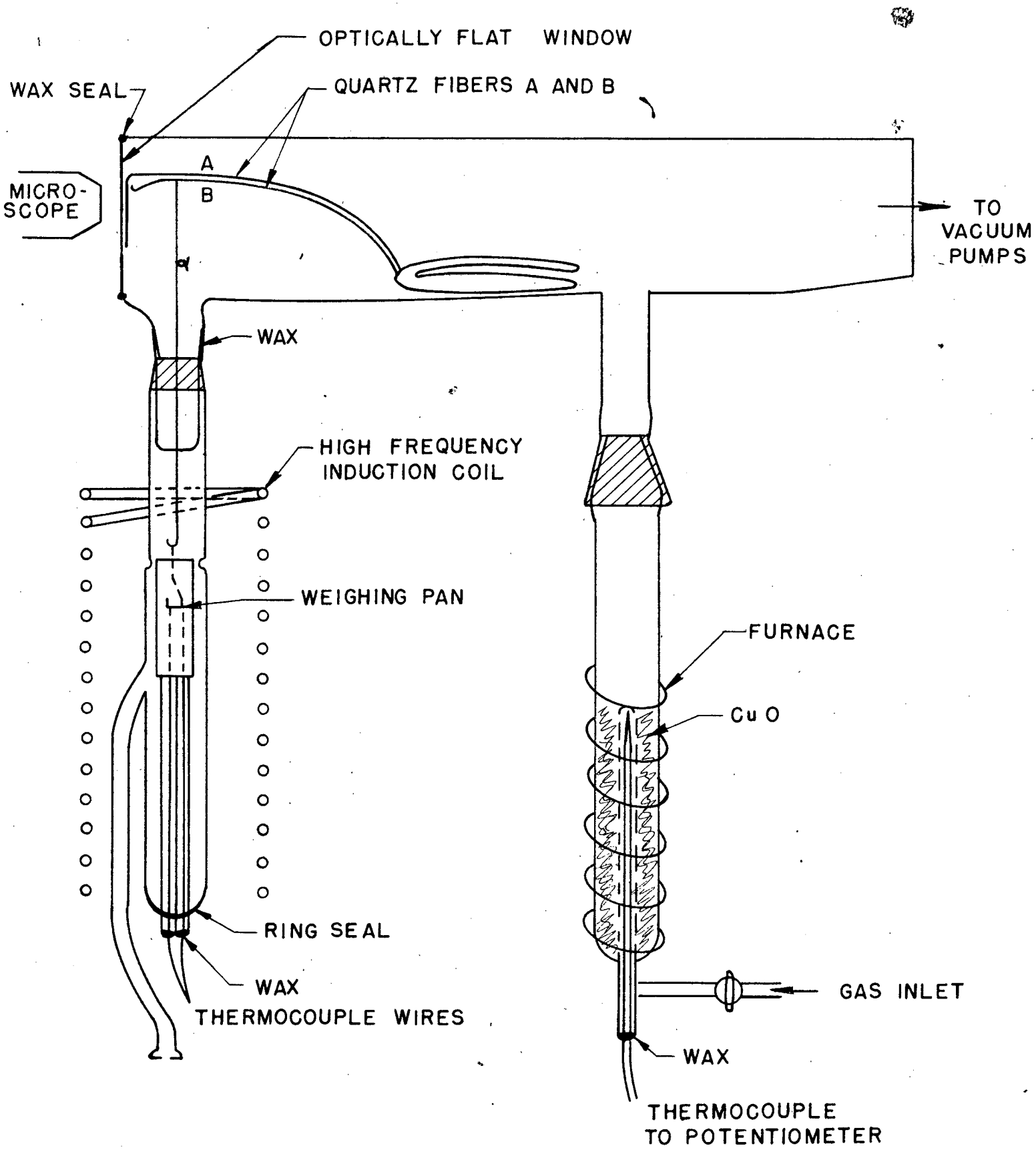
OPTICALLY FLAT WINDOW
WAX SEAL
QUARTZ FIBERS A AND B
A
B
MICRO-
SCOPE
TO
VACUUM
PUMPS
WAX
HIGH FREQUENCY
INDUCTION COIL
WEIGHING PAN
FURNACE
Cu O
RING SEAL
WAX
THERMOCOUPLE WIRES
GAS INLET
WAX
THERMOCOUPLE
TO POTENTIOMETER

Fig. 5

## X-Ray Diffraction Studies of Praseodymium Oxides and of Solid Solutions of Ceric Oxide with Trivalent Rare Earth Oxides

J. D. McCullough

### X-Ray Study of $CeO_2$ - $Nd_2O_3$ System

This system is of interest because of possible relationships to the system $PrO_2$ - $Pr_2O_3$, especially as a possible source of information about $Pr_6O_{11}$. The $CeO_2$ - $La_2O_3$ system has been investigated by Zintl and Croatto and their findings are plotted together with those for $CeO_2$ - $Nd_2O_3$ in Fig. 1.

Starting Materials. The cerium used was $CeO_2$ of better than 99.5% purity obtained from the Rohm and Haas Company, Philadelphia. The neodymium was in the form of $Nd_2O_3$ and was the product of the Maywood Chemical Works, Maywood, New Jersey. Although they claimed 99% purity, a spectrographic analysis showed approximately 1.5 samarium and traces of other rare earths. In any case, the materials were of quite high purity.

Procedure. Stock solutions of Ce and Nd nitrates were made up by dissolving weighed samples of the ignited oxides in nitric acid. Superoxal ($H_2O_2$) was added in small quantities to the $CeO_2$ in order to hasten its solution. Eight samples were made up with the compositions listed in Table I. Each solution was added quickly with stirring to a large excess of freshly prepared ammonium hydroxide. The precipitates were centrifuged, dried, ignited at 800°C for 6 hours, ground in an agate mortar, and heated finally in vacuum to 1400°C for 45 minutes. After another grinding in an agate mortar the samples were mounted in x-ray capillaries. The results are tabulated in Table I and shown graphically in Fig. 1.

Table I

Cell Constants for System $CeO_2$-$Nd_2O_3$
(Fluorite Structure)

| Mixture No. | Atomic percent Nd | Lattice Constant $\lambda$ = 1.542 A |
|---|---|---|
| 1 | 0 | 5.410 ± 0.001 |
| 2 | 5.7 | 5.421 ± 0.001 |
| 3 | 12.5 | 5.433 ± 0.002 |
| 4 | 30.0 | 5.459 ± 0.003 |
| 5 | 41.7 | 5.473 ± 0.003 |
| 6 | 58.8 | 5.494 ± 0.004 |
| 7 | 74.1 | 5.505 ± 0.004 |

Sample No. 7 showed another phase in addition to the solid solution with the fluorite structure. Although this phase should presumably be $Nd_2O_3$, it was neither the "A" nor "C" forms of that substance. The lattice constant of the fluorite phase in this sample should correspond to the saturated solution of $Nd_2O_3$ in $CeO_2$ under the present experimental conditions. Extrapolation of the curve to $a_o$ = 5.505 corresponds to about 67% of NdIII. It is interesting to compare these figures with the atomic percent of PrIII in $Pr_6O_{11}$ which is only 33%.

Praseodymium Oxides.

An extensive x-ray investigation of various Pr-O preparations has been carried out on samples prepared by L. B. Asprey, L. Eyring and McCullough. The results are summarized below.

$Pr_2O_3$. Eyring has been able to prepare either the "A" hexagonal form or the "C" cubic form at will. The "A" form appears to be the more stable form above 1000°C. The "C" form is produced by reduction of a higher oxide in hydrogen at approximately 600°C.

$Pr_6O_{11}$. A total of 15 samples of this material have been examined by means of x-ray diffraction. These samples have been prepared by many methods as indicated in Table II where the lattice constants are given.

$PrO_2$. Including Hilger's $PrO_2$, a total of 12 samples of this oxide have been photographed. The data are summarized in Table III.

The literature values for the lattice constants of $Pr_6O_{11}$ and of $PrO_2$ are not as consistent as those above. They are shown in Tables IV(a) and IV(b). The previous values obtained for $Pr_6O_{11}$ appear for some reason to be not only far from our values but also inconsistent among themselves. Our preparations made apparently in the same manner as theirs show lattice constants in the region of 5.467.

At the present writing there appears to be no explanation for the lack of values in the region 5.395 to 5.464 A, that is, between $PrO_2$ and $Pr_6O_{11}$. Solid solutions between $PrO_2$ and $Pr_2O_3$ should be in order since $CeO_2$ has been shown to form continuous solid solutions with $La_2O_3$ and $Nd_2O_3$ from pure $CeO_2$ to approximately 60 atom percent of the trivalent metal. Preliminary evidence also indicates that $CeO_2$ and $Pr_2O_3$ also form such solid solutions.

Attempts to make a solid solution between $PrO_2$ and $Pr_6O_{11}$ have been unsuccessful. Incomplete oxidation of $Pr_6O_{11}$ has always resulted in two phases, $PrO_2$ and unchanged $Pr_6O_{11}$. Partial decomposition or reduction of $PrO_2$ has produced a $Pr_6O_{11}$ phase and left some unchanged $PrO_2$. Three samples of $PrO_2$-$Pr_6O_{11}$ mixtures were heated in small, sealed quartz tubes (with little free space) to 1060°C for times from 18 hours to 44 hours. Two phases resulted, one of yellow-green $Pr_2O_3$, the other $Pr_6O_{11}$, the latter having the customary lattice constant. A gas escaped (presumably oxygen) when the the tubes were opened.

Stabilities of the Various Oxides.

$PrO_2$ loses oxygen readily when heated mildly in air. In attempting to dry

Table II

Lattice Constants (Fluorite Structure) for Various $Pr_6O_{11}$ Preparations.

$\lambda = 1.542$ A ($CuK_\alpha$)

| Film No. | Method of Preparation (or Sample number) | Lattice Constant Probable Value | (A) ± |
|---|---|---|---|
| 1075 | Eyring, Sample 80(b) | 5.467 | 0.009 |
| 1094 | Eyring, Sample 85(b) | 5.47 | 0.01 |
| 1126 | Eyring, Sample 87(b) | 5.464 | 0.003 |
| 1138* | $Pr_6O_{11}$ heated with $NaClO_3$ in open dish (JDMc) | 5.465 | 0.004 |
| 1150* | $Pr_6O_{11}$ heated with $NaClO_3$ to 500°C in sealed quartz tube for 2 hrs. Calc $O_2$ pressure approx. 100 atm. (JDMc) | 5.465 | 0.005 |
| 1154 | Eyring, Sample 94(a) | 5.469 | 0.004 |
| 1192 | Hilger $PrO_2$ heated to approx. 800°C for 30 min in air. (JDMc) | 5.469 | 0.003 |
| 1202 | Hilger $PrO_2$ heated to 530° in air. Eyring, Sample 100 | 5.469 | 0.003 |
| 1216* | Hilger $PrO_2$ heated in air for 44 hrs at 270°C. (JDMc) | 5.461 | 0.008 |
| 1223** | $Pr_6O_{11}$ sealed in quartz tube heated to 1060°C for 18 hrs (JDMc) | 5.464 | 0.003 |
| 1237** | $Pr_6O_{11}$ sealed in quartz tube heated to 1060°C for 46 hrs. (JDMc) | 5.470 | 0.002 |
| 1249* | $Pr_6O_{11}$ heated with $KClO_3$ in sealed quartz tube for 26 hours at 800°C. | 5.467 | 0.006 |
| 1270* | Eyring, Sample 107(a) $Pr_6O_{11}$ heated in $O_2$ bomb at 500°C | 5.468 | 0.003 |
| 1271* | Eyring, Sample 107(b) $Pr_6O_{11}$ heated in $O_2$ bomb at 500°C | 5.468 | 0.003 |

Table II (Cont'd)

| Film No. | Method of Preparation (or Sample number) | Lattice Constant Probable Value | (A) ± |
|---|---|---|---|
| 1287* | Eyring, Sample 108(a) $Pr_6O_{11}$ heated in $O_2$ bomb | 5.469 | 0.002 |
| 1309 | Pr oxalate heated with $O_2$ in bomb. Eyring 113 | 5.469 | 0.003 |

*$PrO_2$ phase also present.

*$Pr_2O_3$ phase also present.

Table III

Lattice Constants (Fluorite Structure)

for Various $PrO_2$ Preparations.

$\lambda$ = 1.542 A

| Film No. | Method of Preparation or Sample Number | Lattice Constant Probable Value | (A) ± |
|---|---|---|---|
| 1138* | $Pr_6O_{11}$ heated with $NaClO_3$ in open dish (JDMc) | 5.392 | 0.003 |
| 1150* | $Pr_6O_{11}$ heated with $NaClO_3$ in sealed quartz tube for 2 hrs at 500°C. Calc $O_2$ pressure approximately 100 atm. (JDMc) | 5.392 | 0.005 |
| 1166 | Hilger $PrO_2$ | 5.395 | 0.003 |
| 1216* | Hilger $PrO_2$ heated for 44 hrs at 270°C. | 5.392 | 0.005 |
| 1249* | $Pr_6O_{11}$ heated with $KClO_3$ in sealed quartz tube for 26 hrs at 800°C | 5.392 | 0.005 |
| 1273 | Eyring, Sample 106a $Pr_6O_{11}$ plus $O_2$ in bomb | 5.395 | 0.002 |
| 1276 | Eyring, Sample 106b $Pr_6O_{11}$ plus $O_2$ in bomb | 5.395 | 0.002 |
| 1287* | Eyring, Sample 108a $Pr_6O_{11}$ heated in bomb with $O_2$ | 5.393 | 0.002 |
| 1306 | Eyring, Sample 110a $Pr_6O_{11}$ heated in bomb with $O_2$ | 5.395 | 0.002 |
| 1331 | Eyring, Sample 110e $Pr_6O_{11}$ heated in bomb with $O_2$ | Cell Constants not measured yet, but visual comparison shows values to be within narrow limits of other $PrO_2$ samples measured. | |
| 1333 | Eyring, Sample 110d $Pr_2O_3$ heated in bomb with $O_2$ | | |
| 1337 | $Pr_6O_{11}$ heated in $O_2$ at approx 50 atm and 280° for 100 hrs. | | |

*$Pr_6O_{11}$ phase also present.

Table IV(a)

Literature Values for Lattice Constants

of $Pr_6O_{11}$ (Converted to A, $\lambda$ = 1.542A for $CuK_\alpha$ )

| Lattice Constant | Investigators | Reference |
|---|---|---|
| 5.503 | Goldschmidt, Ulrich and Barth. (Heated Pr nitrate to red heat) Prep. I | Strukturbericht 2, 259 |
| 5.499 | Goldschmidt, Ulrich and Barth. (Heated Pr nitrate to red heat) Prep. II | Strukturbericht 2, 259 |
| 5.536 | Goldschmidt (Prandtl) | Strukturbericht 1, 198 |

Table IV(b)

Literature Values for Lattice Constants of $PrO_2$

($\lambda$ = 1.542 A)

| Lattice Constant | Investigators | Reference |
|---|---|---|
| 5.373 | Goldschmidt (Prandtl) | Strukturbericht 1, 198 |
| 5.40 | Scherrer and Palacies | Strukturbericht 1, 198 |

some $PrO_2$, the sample was heated to 270°C for 44 hours in air. The sample then showed about equal amounts of $Pr_6O_{11}$ and $PrO_2$. $Pr_6O_{11}$ is converted to $Pr_2O_3$ at strong red heat, even in contact with air. This can be shown by quickly cooling after protecting from air. An x-ray photo showed the complete conversion of such a sample to the "A" form of $Pr_2O_3$.

A study of mixed Ce-Pr oxides and of Pr-Nd oxides is well under way but x-ray results are not available at this writing. This study includes reduction of the Pr in the mixtures by heating in vacuum partial oxidation of the Pr by heating in air and vigorous oxidation of Pr in oxygen bombs.

[1] Zintl and Croatte, Z. Anag. Allgem. Chem. 242, 79 (1939)

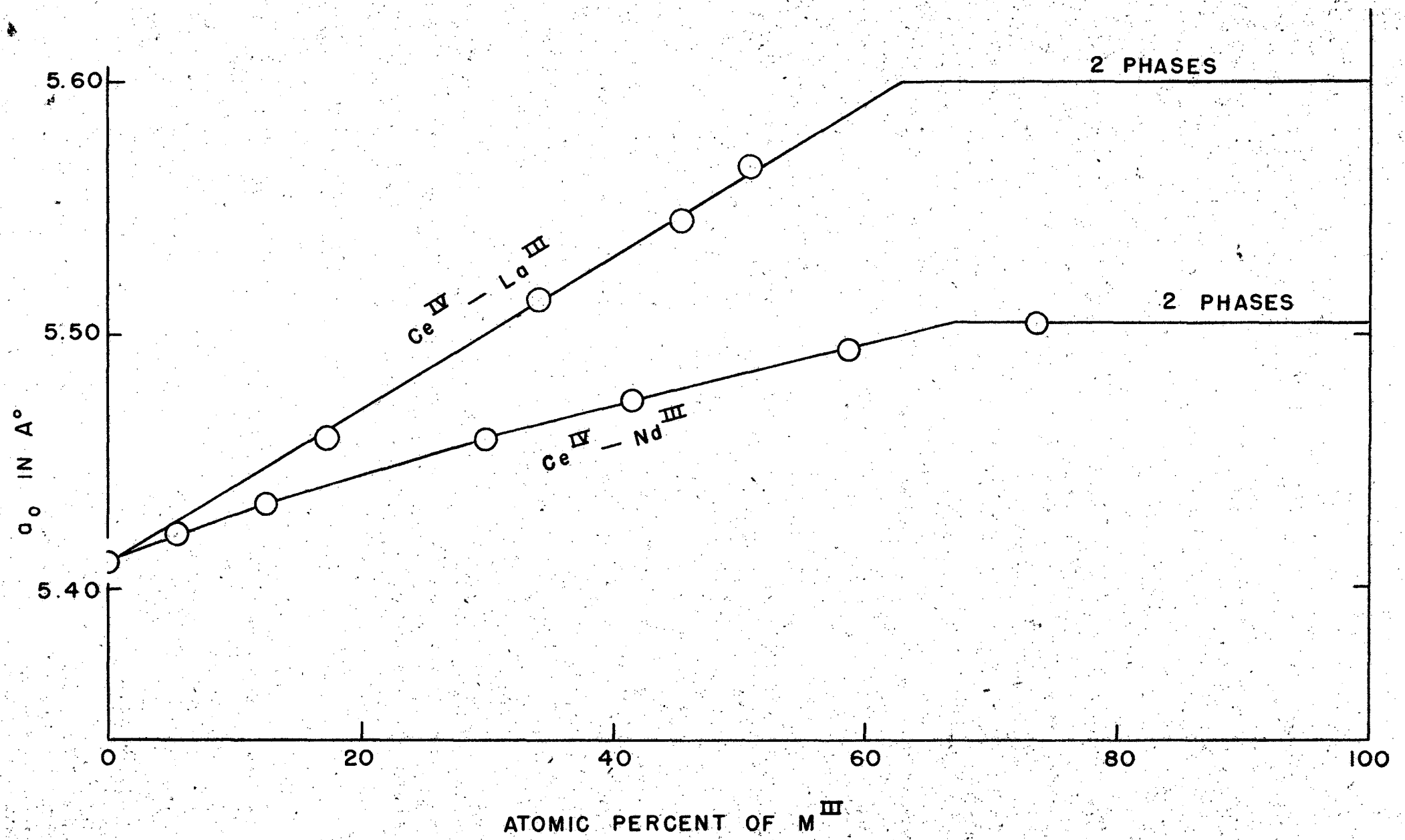
5.60
5.50
5.40
$a_o$ IN A°
2 PHASES
2 PHASES
$Ce^{IV} - La^{III}$
$Ce^{IV} - Nd^{III}$
0
20
40
60
80
100
ATOMIC PERCENT OF $M^{III}$

Fig. 1

12995-1

## Measurements on the Fluorides and Metals of Rare Earth and Actinide Elements

E. F. Westrum, Jr. and J. C. Wallman

(Chemical Preparation)

D. H. Templeton, Carol Dauben and G. A. Young

(X-ray Diffraction Work)

This work is summarized here and will be reported in greater detail at a later time.

$SmF_3$ was prepared from $Sm_2O_3$ by treating the latter with HF. X-ray analysis gave an excellent $EuF_3$ type structure. Production of Sm metal was tried with Li but it was not possible to index the x-ray diffraction lines of the resulting pellet.

$GdF_3$ was prepared by treating the sesquioxide with HF and again an excellent $EuF_3$ type structure was obtained. Reduction of the tri-fluoride with Ba did not appear to give metallic Gd. Li reduction resulted in an unidentified phase, presumed, because of luster and malleability, to be the metal.

$AmF_3$ resulted from treating the hydroxide with HF. Metallic americium was produced by reducing $AmF_3$ with Ba. Uniform, thin Am foils were prepared by vaporizing Am and collecting it on aluminum foils of 0.0001 inch thickness for cyclotron bombardment. The relative vapor pressures of Pu, Am, and Cm in solutions of the three metals were measured. Observations over the range 1400-1800°C indicate that the vapor pressure of curium is more comparable to that of plutonium than that of americium; a volatilization method of separation appears to be feasible.

## Products of the Dissolution of Thorium Metal in HCl

E. F. Westrum, Jr.

A black residue results upon treating thorium metal with various concentrations of HCl; incidental studies on the nature of this residue have been made. It was found that about 25% of the Th remains as residue with an apparent average oxidation state of 2.5. Treatment of this black residue with various solvents showed that the nature of the resulting product could be made to vary. Acetone yielded a greyish residue, nitric acid a bright yellow residue, and HCl a yellow-green residue. Prolonged HCl treatment also gave a yellow residue. Complete solution of the black residue was obtained by using acid fluosilicate. The bright yellow product resulting from nitric acid treatment of the black residue was found to consist of three phases: $ThO_2$ originally present in the Th (and having the $ThO_2$ fluorite structure and proper cell constant), black particles, and yellow particles (having $ThO_2$ fluorite structure but a cell constant about 0.05 Å larger than $ThO_2$). A colloidal suspension of the bright yellow product and a solution made by concentrating the $ThCl_4$ supernatent were examined in the spectrophotometer. No sharp absorption peaks were seen.

# Absorption Spectra of the Aqueous Tripositive Ions of the Lanthanide and Actinide Elements

Betsy Jones and B. B. Cunningham

The qualitative resemblance of the absorption spectra of the aqueous tripositive ions of analogous members of the lanthanide and actinide series of elements has been noted previously by Seaborg[1], Cunningham[2], and by Werner and Perlman[3]. A more detailed investigation of these resemblances has been undertaken using spectral apparatus of much higher dispersion than that previously used.

Apparatus and techniques used in this investigation are as follows. The spectrograph employed is a Baird three meter grating spectrograph giving approximately linear dispersion, which amounts to 5.62A/mm at ~ 2000A and 5.45A/mm at ~ 8800A. The slit width used is 25 $\mu$.

A tungsten filament lamp is used as a light source in the region of 8800-3100A and a hydrogen discharge lamp with quartz windows in the region below 3100A.

Photographic plates used are indicated in Table I below.

Table I

Photographic Plates Used for Determining the Absorption Spectra of Lanthanide and Actinide Ions

| Spectral Region | Eastman Plate No. |
|---|---|
| 1900-3290A | 103-0 U.V. Sensitized |
| 3050-4460 | 103-0 |
| 4225-6790 | 103-F |
| 6560-8800 | I-N |

Solutions have been examined in the quartz micro-absorption cells manufactured by Pyrocell Manufacturing Company. In these cells the solution is contained in a narrow rectangular space of 1 cm. depth, about 1.5 cm. height and from 1.4 to 2 mm. thickness.

A few spectra of solid compounds have been determined in the visible region using a 100 power microscope to cast an image of a small solid crystal on the slit of the spectrograph.

In work with aqueous solutions the variables employed to obtain the maximum number of lines and the maximum resolution are: the concentration of

the absorbing ion, the intensity of the light source and the length of the exposure time.

Each plate used for recording the absorption is also exposed to a d.c. arc iron spectrum which is calibrated by comparison with known iron wave lengths. Each absorption line is measured with respect to an iron line using a Bausch and Lomb eye piece fitted with a millimeter scale. The wave length of the absorption line is then determined from the known wave length of the iron line, the measured distance of the absorption line from it and the known dispersion of the instrument. Errors are estimated on the basis of the width of the line and the error of reading the distance with the eye piece.

The absorption spectra of perchlorate solutions of the following ions have been photographed and measured in the region 2000-8800A: $La^{+++}$, $Ce^{+++}$, $Pr^{+++}$, $Nd^{+++}$, $Sm^{+++}$, $Eu^{+++}$, $Gd^{+++}$. The data are summarized in tabular form in Table II, III, and IV and compared with those of Prandtl and Scheiner[4] and with those of D. C. Stewart and Cunningham[5].

The Baird instrument employed in the present investigation gives higher resolution than either the prism instrument used by Prandtl and Scheiner or the Beckman D.U. spectrophotometer used by Stewart.

The intensity of absorption of the strongly absorbing 5030.0A line of $Am^{+3}$ is much greater than that of the rare earths, as a consequence of the increased relaxation of the selection rules with higher atomic number. The three very closely spaced $Am^{+++}$ lines at 5103.7, 5078.3 and 5030.0 are similar in appearance to the closely spaced $Eu^{+++}$ lines at 3997.9, 3943.5 and 3937.3A.

---

1 G.T.Seaborg University of California Report UCRL 102 (July 1948)
2 B.B.Cunningham AECD 1838
3 L.B.Werner and I.Perlman, University of California Report UCRL 156 (July 1948)
4 Prandtl and Scheiner Z. Anorg. Allgem. Chem., 220, 107 (1934)
5 D. C. Stewart & B. B. Cunningham, unpublished data

Table II

Absorption Spectra of the Tripositive Lanthanides

| Ion and No. 4f e's | observed λ(A) | Prandtl and Scheiner λ (A) | D.Stewart (mu) Beckman | Qualitative Description Min.conc. at which observed, width, completeness of absorption. | |
|---|---|---|---|---|---|
| $La^{+++}4f^{0}$ | transparent | → | → | | |
| $Ce^{+++}4f^{1}$ | - | 2966 | 296.9 | Not observed in a no. of exposures | |
| | 2532 ± 2 | 2530 | <259.3 253.0 | 0.0026 M, inc., very br. | |
| | 2368 ± 2 | 2372 | 237.2 | 0.0003 M, inc., very br. | |
| | 2221 ± 2 | - | - | 0.0003 M, inc., very br.)somewhat | |
| | 2099 ± 2 | - | - | 0.0003 M, inc., very br.)uncertain since gelatin absorbs strongly | |
| | ~2300 continuum | cont. | cont. | | |
| $Pr^{+++}4f^{2}$ | 5972.5±0.5 | 5971 | - | 1M, inc., br. | |
| | 5890.4±0.5 | 5890 | 589.0 | 1M, com., br. | |
| | 4816.6±0.5 | 4819 | 481.9 | 0.1M, inc., med.br. | |
| | 4686.7±0.5 | 4688 | 468.8 | 0.1M, inc., med.br. | |
| | 4440.2±0.5 | 4440 | 444 | 0.1M, inc., med.br. | |
| | at 2225A in 1 M cont. | - | cont | | |
| $Nd^{+++}4f^{3}$ | 8916.6±1 | - | 895 | 1M, inc., br.) | 8890 |
| | 8767.4±1 | | 868 | 1M, inc., br.) | |
| | 8654.9±1 | 8630 | 868 | 0.1M, to resolve com.br. | 8660 |
| | 8623.7±1 | | 868 | 0.1M, to resolve com.br. | 8660 |
| | 8011.4±1 | | 805 | 0.1M, to resolve com.br. | 8010 |
| | 7940.4±1 | | 797 | 0.1M, to resolve com.br. | 7985 |
| | 7836.6±1 | 7850 | | 1M, to resolve com.br. | 7940 |
| | 7398.8±1 | | | 0.1M, to resolve com.very br. | 7400 |
| | 7342.2±0.5 | | 742.5 | 0.1M, to resolve,inc,med.br. — | 7320 |
| | 7315.1±0.5 | 7300 | 732.5 | 0.1M, to resolve,com,med.br. | |
| | 6880.5±1 | 6877 | - | 0.1M, inc.,br. | |
| | 6788.7±1 | 6786 | 678.6 | 0.1M,inc.,br. | |
| | 6365.2±1 | 6369 | - | 1M, inc., br.)quite faint | |
| | 6282.2±1 | 6288 | - | 1M, inc., br.) | |
| | 6246.7±1 | - | - | 1M, inc.,me br.) | |
| | 6228.5±1 | 6228 | - | 1M, inc.,med.br. | |
| | 5782.8±0.5 | 5784 | - | 0.1M, to resolve,com.,med.sh. | |
| | 5752.6±0.5 | 5752 | 575.6 | 0.1M, to resolve,com.,med.sh. | |
| | 5738.3±0.5 | | - | 0.1M, to resolve,com.,med.sh. | |
| | 5716.5±0.5 | 5724 | - | 0.1M, to resolve,com.,med.sh. | |
| | 5318.6±0.5 | 5320 | - | 1M, inc.,br. | |
| | 5218.9±0.5 | 5219 | 521.9 | 0.1M., to resolve,com.,br. | |
| | 5204.2±0.5 | 5207 | - | 0.1M, to resolve,com.,br. | |
| | 5126.8±0.5 | 5129 | 512.9 | 0.1M,com.,br. | |
| | 5088.4±0.5 | 5090 | - | 0.1M,com.,med.sh. | |

| Ion and No. 4f e's | Observed λ (A) | Prandtl and Scheiner λ(A) | Stewart (mu) Beckman | Qualitative Description Min.conc. at which observed, width, completeness of absorption. |
|---|---|---|---|---|
| $Nd^{+++}4f^3$ | 4799.1±0.5 | 4802 | - | 1M, inc., med.br., quite faint |
| | 4755.8±0.5 | 4755 | 475.5 | 0.1M, com., med. br. |
| | 4690.6±0.5 | 4691 | 469.1 | 0.1M, com., med.sh. |
| | 4654.7±0.5 | - | - | 1M, inc., med. br., quite faint |
| | 4614.1±0.5 | 4612 | 461.2 | 0.1M, inc., br. |
| | 4329.1±0.5 | 4332 | 433.2 | 0.1M, inc., med. br. |
| | 4293.6±0.5 | 4296 | - | 1M, inc., med., quite faint |
| | 4272.9±0.2 | 4272 | 427.2 | 0.1M, com., sh. |
| | 4178.6±0.5 | 4282 | 418.2 | 1M, inc., med., quite faint |
| | 3819.7±0.5 | - | - | 1M, inc., sh. |
| | 3802.1±0.5 | 3806 | - | 0.5M, inc., sh. |
| | 3557.3±0.5 | 3557 | - | 0.1M, com., med. sh. |
| | 3583.1±0.5 | 3538 | 353.8 | 0.1M, com., med. sh. |
| | 3504.2±0.5 | 3504 | 350.4 | 0.1M, com., med. sh. |
| | 3465.6±0.5 | 3465 | 346.5 | 0.1M, com., med. sh. |
| | 3395.4±0.5 | 3400 | 340.0 | 1M, inc., med. br. |
| | 3285.1±0.5 | 3282 | 328.2 | 0.5M, inc., br. |
| | 3228.4±0.5 | - | - | 1M, inc., med. sh. |
| | - | 3138 | 313.8 | Rechecked several times |
| | 2996.1±0.5 | 2997 | - | Inc., med. sh. |
| | 2985.0±0.5 | 2984 | 298.4 | Com., sh. |
| | 2912.7±0.5 | 2911 | - | Inc., sh. |
| | 2898.7±0.5 | 2899 | 289.9 | Inc., sh. |
| | 2599.6±0.5 | 2598 | 259.8 | Inc., sh. |
| | 2590.5±0.5 | 2589 | - | Inc., sh. |
| | 2505.0±0.5 | 2504 | 250.4 | Inc., sh. |
| | 2496.0±0.5 | 2496 | - | Inc., sh. |
| at ~ | 2125.0±0.1 cont.in 0.1M | cont. | cont. | |
| $Sm^{+++}4f^5$ | - | 5593 | - | Rechecked several times |
| | 4996.1±1 | 4995 | - | 1M, inc., med. br. |
| | 4888.7±1 | 4892 | - | 1M, inc., br. |
| | 4792.4±1 | 4793 | 479.3 | 1M, inc., br., resolution difficult |
| | 4748.3±1 | | | 1M, inc., med. br., resolution difficult |
| | 4631.5±1 | 4639 | 463.9 | 1M, inc., br. |
| | 4505. ±1 | 4513 | - | 1M, inc., br., very faint |
| | 4405. ±2 | 4430-4389 | 443-438.9 | 1M, inc., very br. |
| | 4175.8±1 | 4180 | - | 1M, inc., med. sh. |
| | - | 4164 | - | |
| | 4152.2±1 | 4148 | 414.8 | 1M, inc., med. sh. |
| | - | 4056 | | Rechecked |
| | 4013.1±1 | 4016 | | 0.1M, com., br. |
| | 4902.7±1 | 3905 | | 1M, inc., med. br. |
| | 3742.7±1 | 3746 | | 1M, inc., med. br. |
| | 3628.8±1 | 3620 | | 1M, inc., med. br. |
| | 3610.4±1 | | | 1M, inc., med. br. |
| | 3535.3±1 | 3535 | - | 1M, inc., med. br. |
| | 3443.3±1 | 3444 | 344.4 | 1M, inc., med. br. |
| | 3317.0±1 | 3326 | - | 1M, inc., med. sh. |
| | 3175.2±1 | 3175 | - | 1M, inc., med. br. |
| | 3054.8±1 | 3055 | - | Inc., med. |
| | 3891.2±1 | 2900 | - | Inc., med. |

| Ion and No. 4f e's | Observed λ(A) | Prandtl & Scheiner λ(A) | Stewart (mu) Beckman | Qualitative Description, Min. conc. at which observed, width, completeness of absorption |
|---|---|---|---|---|
| $Sm^{+++}4f^5$ cont'd | 2751.3±1 | 2737 | - | Inc., med. |
| | 2703. ±2 | - | - | Inc., med. |
| | 2689. ±2 | - | - | Inc., med. |
| | 2665. ±2 | - | - | Inc., med. |
| | 2377.6±1 | - | - | Inc., med. |
| | 2351.8±1 | 2354 | - | Inc., med. |
| | 2330.1±1 | 2328 | - | Inc., med. |
| at ~ | 2250. ±0.1M | | - | |
| | cont. in 1M | cont. | cont. | |
| $Eu^{+++}4f^6$ | - | 5360 | - | Rechecked several times |
| | 5257.1±0.3 | 5255 | - | 1M, com., sh. |
| | 5252.6±0.3 | | - | 1M, com., sh. |
| | 4650.2±0.3 | 4656 | - | 1M, inc., sh. |
| | 4647.7±0.3 | 4651 | - | 1M, inc., sh. |
| | 4642.5±0.3 | 4647 | - | 1M, inc., sh. |
| | 3997.9±0.3 | - | - | 1M, inc., sh., cf. $Am^{+++}$ |
| | 3943.5±0.3 | 3943 | 394.3 | 1M, inc., sh., cf. $Am^{+++}$ |
| | 3937.3±0.3 | - | - | 0.1M, com., med. sh. cf. $Am^{+++}$ |
| | 3839.9±0.3 | 3853 | 385.3 | 1M, inc., med. sh. |
| | 3799.1±0.3 | 3809 | 380.9 | 1M, inc., med. sh. |
| | 3758.5±0.3 | 3766 | 376.9 | 0.1M, inc., sh. |
| | 3745.0±0.3 | 3749 | - | 1M, inc., sh. |
| | 3616.7±0.3 | 3617 | 361.7 | 0.1M, com., sh. |
| | 3612.2±0.3 | | - | 1M, inc., sh. |
| | 3259.0±0.3 | 3275-53 | - | 1M, inc., med. sh. |
| | 3212.1±0.3 | - | - | 1M, inc., med. sh. |
| | 3203.2±0.3 | 3204 | - | 1M, inc., sh. |
| | 3195.8±0.3 | | - | 1M, inc., sh. |
| | 3189.7±0.3 | | - | 1M, inc., sh. |
| | 3177.5±0.3 | 3179 | - | 0.1M, com., sh. |
| | 3167.9±0.3 | 3168 | - | 0.1M, com., sh. |
| | 2980.5±0.3 | 2980 | 298.0 | Com., sh. |
| | 2936.4±0.3 | - | - | Inc., sh. |
| | 2930.2±0.3 | 2930 | 293.0 | Inc., sh. |
| | 2924.6±0.3 | - | - | Inc., sh. |
| | 2899.9±0.3 | - | - | Inc., sh. |
| | 2894.3±0.3 | - | - | Inc., sh. |
| | 2853.3±0.3 | 2861 | - | Com., sh. |
| | 2848.4±0.3 | 2853 | 285.3 | Com., sh. |
| | 2842.8±0.3 | | - | Inc., sh. |
| | 2761.9±0.3 | - | - | Inc., sh. |
| | 2698.2±0.3 | - | - | Inc., med. sh., quite faint |
| | 2644.6±0.3 | - | - | Com., sh. |
| | 2638.4±0.5 | 2676 | 267.6 | Inc., med. sh., quite faint |
| | 2630.0±0.5 | - | - | Inc., med. sh., quite faint |
| | 2606.3±0.5 | - | - | Inc., sh., quite faint |
| | 2587.0±0.5 | - | - | Inc., sh., quite faint |
| | 2571.3±0.5 | - | - | Inc., sh., quite faint |
| | 2563.1±0.3 | 2560 | 256.0 | Com., sh. |
| | 2542.4±0.3 | - | - | Com., med. sh. |
| | 2511.1±0.3 | 2513 | 251.3 | Com., med. sh. |
| | 2498.1±0.3 | - | - | Inc., med. sh. |
| | 2417.5±0.3 | - | - | Inc., sh. |

| Ion and No. 4f e's | Observed λ(A) | Prandtl & Scheiner λ (A) | Stewart (mu) Beckman | Qualitative Description, Min. conc. at which observed, width, completeness of absorption |
|---|---|---|---|---|
| $Eu^{+++}4f^6$ cont'd | at~2350.0±MC cont. in 0.1M | cont | cont | |
| $Gd^{+++}4f^7$ | 3113.8±0.2 | - | - | Inc., sh. |
| | 3108.8±0.2 | 3108 | - | Inc., sh. |
| | 3058.8±0.2 | - | - | Inc., sh. |
| | 3055.4±0.2 | 3055 | - | Inc., sh. |
| | 3052.1±0.2 | - | - | Inc., sh. |
| | 2790.4±0.2 | 2791 | 279.1 | Com., sh. |
| | 2788.7±0.2 | | | Com., sh. |
| | 2787.0±0.2 | | - | Com., sh. |
| | 2784.8±0.2 | | - | Com., sh. |
| | 2764.4±0.2 | - | - | Inc., sh. |
| | 2762.5±0.2 | 2762 | - | Com., sh. |
| | 2760.6±0.2 | - | - | Inc., sh. |
| | 2758.6±0.2 | - | - | Com., sh. |
| | 2758.2±0.2 | - | - | Com., sh. |
| | 2755.6±0.2 | 2756 | 275.6 | Com., sh. |
| | 2753.8±0.2 | - | - | Com., very sh. |
| | 2743.4±0.2 | - | - | Inc., sh. |
| | 2741.2±0.2 | - | - | sh. |
| | 2737.8±0.2 | - | - | sh. |
| | 2732.3±0.2 | - | - | sh. |
| | 2730.4±0.2 | - | - | |
| | 2728.1±0.2 | 2729 | 272.9 | |
| | 2725.3±0.2 | - | - | |
| | 2526.5±0.2 | - | | Inc., sh., very faint |
| | 2520.1±0.2 | 2521 | - | Inc., sh., very faint |
| | cont. | 2457 | - | |
| | with indication of max at 2450-2500A | 2436 cont. | - cont. | |

(1) With the exception of the intensely absorbing $Ce^{+++}$, the spectra of 1M and ~0.15M solutions were photographed. Only the more intense absorption appears in the latter, thus the concentrations listed above divide the lines into two classifications of intensity. Completeness of absorption is indicated by inc.= incomplete, and com. = complete. The width of the absorption line is given by five rather arbitrary classifications. br. = broad, med. br. = medium broad, med. = medium, med. sh. = medium sharp, sh. = sharp.

(2) $Nd^{+++}$ 's from Hoogschagen and Gorter, Physica, 14, 197 (1948)

Table III

Solid Absorption Spectra

| Compound | Observed λ (A) | Comparable Sol'n Absorption | Comments |
|---|---|---|---|
| Hydrated $NdCl_3$ | 5248.2±0.5<br>5221.2±0.5<br>4292.9±0.5<br>4273.4±0.5<br>4025.7±1<br>4013.4±1<br>3576.6±0.5<br>3539.3±0.5<br>3562.0±0.5<br>3569.2±<br>3491. ±1<br>3482. ±1<br>3468.2±0.5 | 5212.2<br><br>4272.9<br><br><br><br>3557.3<br>3538.1<br>3504.2<br>3465.2 | Crystal lines are much sharper than those observed with solutions. Broad solution lines are split into more components by the electric field of the crystal. The effect of replacing the $ClO_4^-$ ion by the $Cl^-$ ion is seen to be a shift of about 20A to the red. |
| Hydrated $EuCl_3$ | 3940.2±0.5<br>3945.2±0.5<br>3621.2±0.5<br>3618.4±0.5<br>3203.7±0.5<br>3183.0±0.5<br>3179.1±0.5 | 3940.1<br><br>3652.2<br>3616.7<br>3203.2<br>3195.8<br>3189.7<br>3177.5<br>3167.9 | With microscope: Shift from anion interchange not so marked here.<br>Without microscope: $Eu^{+++}$ absorption is quite weak, and not enough light passes through microscope for method to be successful. |

Table IV

Actinide Absorption Spectra

| Ion | Observed λ A | D.Stewart's λ (mμ) | Comparable $Eu^{+++}$ Absorption (most intense) | Comments |
|---|---|---|---|---|
| $Am^{+++}$ | ~8135 | ~815.0 | | Need more concentrated solution. inc.med.br. |
| 0.0046 M | 5103.7±1 | | 3997.9 | |
| in 0.97 M | 5078.3±1 | | 3943.5 | Inc. med. br. |
| $HClO_4$ | 5030.0±1 | ~504.0 | 3937.3 | Com. med. br. |

## Hafnium-Zirconium Separation

L. J. Beaufait and E. H. Huffman

A promising method found for the removal of zirconium from hafnium has been the preferential extraction of the zirconium by TTA(thenoyltrifluoroacetone) in benzene. Preliminary results obtained on small quantities, using spectrographic and $Zr^{95}$ tracer analytical methods, indicated that the distribution constant (conc. in benzene/conc. in water) for zirconium was at least three times that for hafnium, when a 2 M $HClO_4$ solution of the elements was extracted with a 0.02 M solution of TTA in benzene. A purification of 81 mg of hafnium, containing 2% zirconium, in 300 ml of 2 M $HClO_4$ was carried out by extracting with five successive 300 ml portions of 0.02 M TTA in benzene. The 17 mg of hafnium recovered from the acid then contained 0.2% zirconium. Further work is designed to obtain more exact values for the distribution constant and to study the effects of variables.

Early attempts to use ion exchange for the separation of hafnium and zirconium have not been successful. When cation exchange methods were attempted the zirconium-hafnium "adsorption" was found to be due to the colloidal nature of the solution, as shown by similar results with inert adsorbents such as charcoal. High enough concentrations of the acids and complexing agents to prevent colloid formation also prevented adsorption. Various concentrations and combinations of HCl, $H_2SO_4$, HF and citrates and oxalates were used. More recently it has been found that 2 M $HClO_4$ prevents colloid formation and allows complete adsorption on Nalcite and that the zirconium and hafnium can be removed with 2-6 M HCl but no column run has yet been tried.

Hafnium and zirconium can be completely adsorbed from 0.03-0.3M HF, when the HF to Zr-Hf concentration is 6:1 or greater, on the anion exchange Amberlite IR-4. Elutions from columns with various concentrations $HNO_3$ and $H_2SO_4$, containing HF to prevent hydrolysis and colloid formation, gave broad "peaks" and no perceptible separation of zirconium and hafnium.

## Ion Exchange Separation of Heavy Elements

K. Street and G. T. Seaborg

In the course of a search for effective separation procedures to be used in our bombardment work with the heavy elements, the elution of several elements from Dowex 50 resin column with HCl solutions has been studied.

It was shown by the use of americium, curium, lutecium, element 61, and cerium tracers that the order of elution of these tripositive ions is strongly dependent on the HCl concentration. With 6 M HCl the rare earths are eluted in the same order as with citrate (lutecium, 61, cerium). Curium comes off just before 61 and americium at the same time as 61. With increase in HCl concentration the actinides elute relatively more rapidly than the rare earths. With 12 M HCl americium and curium are both eluted ahead of lutecium and hence are separated from all the rare earths. Also, although the order of elution of the rare earths remains normal in 12 M HCl, that of the actinides is reversed, i.e., americium is eluted ahead of curium. The separation of americium and curium is small but can be increased by going to higher acid concentration, i.e., 14 M HCl, and also by using 10-30% alcoholic solutions 12 M in HCl.

The order of elution with 12 M HCl of several of the other elements encountered in our work have also been determined approximately. Tripositive plutonium is eluted just ahead of the americium while actinium is eluted very slowly, coming off after cerium. Th(IV), Pu(IV) and Np(IV) are also eluted very slowly, coming off well after the rare earths and actinium. Radium is also well separated from americium and curium, being eluted at about the same time as element 61. U(VI), Bi(III), and probably Pb(II) are eluted very rapidly, coming off the column in approximately one-half the time in which americium and curium are eluted.

## Mass Spectrograph for Identification of Radioactivities

F. L. Reynolds, D. H. Templeton and D. G. Karraker

During the past year a mass spectrograph has been constructed for the determination of mass assignments of radioactive isotopes from cyclotron bombardments. Figures 1 and 2 show views of the receiver and panel region and the source region respectively.

The ion source consists of a tungsten or platinum filament on which the sample is heated to produce ions by thermal excitation. An alternate source, to produce ions by electron bombardment, is under construction. The ions are accelerated by an electric field of about 8000 volts. The beam is deflected $60^{\circ}$ on an arc of 20 centimeter radius. The ions are usually collected on a photographic plate located at the focus. For preliminary experiments with stable isotopes, an electrometer detector is also provided. The radioactive atoms are detected on the plate either by counting methods or by photographic "transfer" techniques similar to those described by Dempster and coworkers[1]. The mass scale on the plate is based on the positions of lines caused by known stable isotopes.

A special feature of the design is the exposed position of both the source and the receiver, which facilitates insertion of the source with the radioactive sample and the removal of the plate after the run. The entire spectrograph may be readily disassembled for cleaning, each unit having vacuum gasket connections. The instrument is of metal construction except the Kovar to glass electrical leads to the source unit. Both the magnet supply current and the 10 kv acceleration supply are measured accurately by potentiometer methods. The magnet supply current is constant to 1 part in 13,000 over a period of an hour. The 10 kv supply is constant to 1 part in 5,000. The magnetic field is sufficient to focus ions of masses as high as 400. The practical resolution of the instrument is about 1200, the dispersion at mass 100 being about 4.0 mm/mass unit. The geometry of the instrument is around 2%, or about one ion of fifty hitting the slit plate reaches the receiver.

During the four months that the spectrograph has been in operation, a large portion of the operating time has been given to adjustments and runs on non-active samples. Good results have been obtained by thermal ionization techniques on samples of neodymium, rubidium, cesium, barium, lead, sodium, thallium and tungsten obtained by evaporation of nitrate solutions in microgram quantities on tungsten or platinum filaments.

Several successful runs have been made with two radioactive isotopes of rubidium, 5-hr. $Rb^{81}$ and 6-hr $Rb^{82}$. These isotopes are of particular interest because their similar half-lives make their differentiation by any other method quite difficult. In fact, the presence of two isotopes was not suspected until the result of the mass spectrograph was obtained.

Bromine in the form of ammonium bromide was bombarded in the 184-inch cyclotron with helium ions of various energies. A small amount of rubidium carrier was added and separated from the target material by strong heating. The residue was dissolved in a small volume of acid and evaporated on the filament for

analysis in the mass spectrograph.

The receiver plate ((a) in Fig. 3) was placed emulsion to emulsion against a transfer plate ((b) in Fig. 3) before development. The radiation from the active deposit causes an image on the transfer plate, while the stable isotopes have no effect. After development the isotopes are washed out of the emulsion, so no further measurements are possible.

The plate from a similar experiment was counted with a Geiger counter, placed behind a small slit. The activity at mass 81 decayed with a 5.0-hr half-life, while that at mass 82, which was considerably weaker, decayed with about a 6-hr. half-life.

The 40-day activity which has been assigned to $Rb^{84}$ was also produced in these bombardments, but in yield too poor for detection with the mass spectrograph.

---

[1] Lewis and Hayden, MDDC-1556, A Mass Spectrograph for Radioactive Isotopes.

## Figure Captions

Fig. 1 Plate-Receiver view of Mass Spectrograph and control panel

Fig. 2 Source region of Mass Spectrograph

Fig. 3 a) Receiver plate
b) Transfer plate

02-203

FIG. 2

02-202

a.

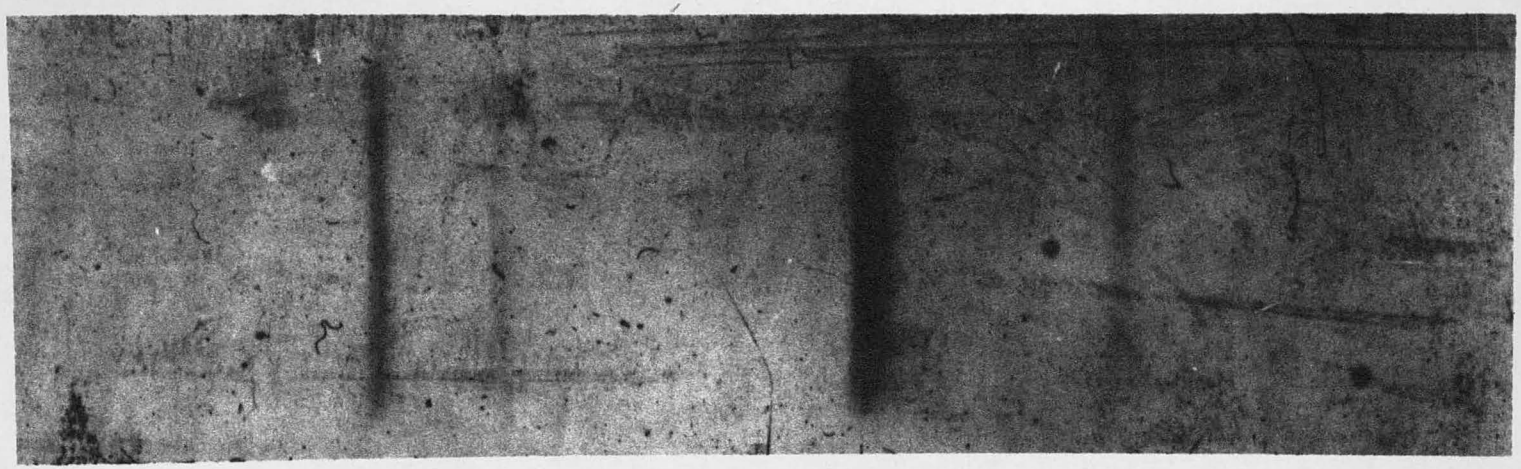

b.

81 82 85 87

FIG. 3

OZ-209

## New Artificial Collateral Decay Chains of the Heavy Elements

W. W. Meinke, A. Ghiorso and G. T. Seaborg

We have produced and identified four new series of alpha-particle emitting radioactive elements; one is a collateral branch of the actinium (4n + 3) radioactive family, another is collateral to the neptunium (4n + 1) family, and the other two are collateral to the thorium (4n) family. Part of this work has already been reported[1]. These series are of considerable interest in that their early members lie on the neutron deficient side of beta stability. They have been produced in high yield by irradiation of thorium with deuterons of about 80 Mev. or alpha particles of about 120 Mev. in the Berkeley 184-inch cyclotron. A fifth series, believed to be collateral to the uranium (4n + 2) family although not positively identified, has been produced at higher deuteron energies. In so far as the present observations are concerned, all of these series begin with isotopes of protactinium (atomic number 91) or uranium (atomic number 92) although progenitors with higher atomic numbers are to be expected and will possibly be produced and identified. The protactinium isotopes are $Pa^{228}$, $Pa^{227}$, and $Pa^{226}$(?), formed by the d,6n), (d,7n) and (d,8n)(?) reactions respectively, while the uranium isotopes are $U^{229}$ and $U^{228}$ formed by the ($\alpha$, 7n) and ($\alpha$,8n) reactions respectively.

After alpha or deuteron bombardments ranging from a few minutes to several hours duration, the metallic thorium was dissolved and the element protactinium or uranium was isolated in essentially weightless fractions. The protactinium was separated by di-isopropyl ketone and/or TTA extractions while the uranium was separated by ether extractions. The decay of the alpha-particles from these fractions was measured through the use of standard alpha-particle counting devices and also with the help of an alpha-particle pulse analyzer equipped with a fast sample-changing mechanism. Through the use of the latter, a number of alpha-particle groups were observed and their energies determined.

Prominent soon after deuteron bombardment are a number of alpha-particle groups, which decay with the 38-minute half-life of the protactinium parent. These are due to the following collateral branch of the (4n + 3) radioactive family:

$$_{91}Pa^{227} \xrightarrow{\alpha} {}_{89}Ac^{223} \xrightarrow{\alpha} {}_{87}Fr^{219} \xrightarrow{\alpha} {}_{85}At^{215} \xrightarrow{\alpha} {}_{83}Bi^{211}(AcC) \xrightarrow{\alpha}$$

$$_{81}Tl^{207}\ (AcC'') \xrightarrow{\beta^-} {}_{82}Pb^{207}\ (\text{stable}).$$

The branch which arises from orbital electron capture by $Pa^{227}$ is not shown. The mass type was identified by observation of the characteristic energy and half-life of the $Bi^{211}$ (AcC) alpha-particles, the half-life of the beta-particle-emitting $Tl^{207}$ (AcC") and the growth of 18.9-day $Th^{227}$ (RdAc) as an orbital-electron-capture branching decay product of the $Pa^{227}$ (ratio $K/\alpha = \sim 0.2$). The energy obtained for these $At^{215}$ alpha-particles is several hundred kilovolts less than that reported[2] for $At^{215}$ as formed by the beta-particle branching decay of $Po^{215}$ (AcA).

Identification of members of the series was aided by a simple method of

recoil collection. Recoil atoms were collected from a plate which contained the entire series in equilibrium and measurements using the plate upon which these were collected established the half-life and the energy of the $Ac^{223}$ alpha-particles. In a "second order" recoil experiment recoils were collected from the plate containing $Ac^{223}$ (and daughters) in order to check the half-life of the alpha-particles attributed to $Bi^{211}$ (AcC) and similarly a third order recoil experiment was effected in order to isolate the beta-particle emitter and prove that it decayed with the known half-life of $Tl^{207}$ (AcC"). The very short half-lives of the $Fr^{219}$ and $At^{215}$ were estimated and their energies identified through crude coincidence experiments using the pulse analyzer apparatus to operate the driven sweep of a cathode ray oscillograph. The measured half-lives and energies for the members of this series are summarized in Table I.

After the decay of the above described series, a second group of alpha-particle emitters can be resolved. This second series, which decays with the 22-hour half-life of its protactinium parent, is a collateral branch of the (4n) radioactive family as follows:

$$_{91}Pa^{228} \xrightarrow{\alpha} {}_{89}Ac^{224} \longrightarrow {}_{87}Fr^{220} \longrightarrow {}_{85}At^{216} \xrightarrow{\alpha} {}_{83}Bi^{212}(ThC) \begin{cases} \xrightarrow{\alpha} 34\% \\ \xrightarrow{\beta^-} 66\% \end{cases}$$

$$\left.\begin{array}{l} {}_{81}Th^{208}(ThC") \xrightarrow{\beta^-} \\ {}_{84}Po^{212}(ThC') \xrightarrow{\alpha} \end{array}\right\} {}_{82}Pb^{208} \quad \text{(stable)}$$

The branch which arises from orbital-electron-capture of $Pa^{228}$ and $Ac^{224}$ is not shown. The mass type was identified through observation of the characteristic radioactive properties of the $Bi^{212}$ (ThC) and its daughters, chemical identification of $Bi^{212}$ (ThC), the growth of $Th^{228}$ (RdTh) as an orbital-electron-capture branching decay product of the $Pa^{228}$(ratio K/a = $\sim$ 50) and the growth of $Ra^{224}$ (ThX) as a similar product of the $Ac^{224}$ (ratio K/a = $\sim$ 10). Of interest is the check, within about 0.15 Mev., of the energy of these $At^{216}$ alpha-particles with the energy reported[3] for $At^{216}$ as formed by the beta-particle branching decay of $Po^{216}$ (ThA). The half-life of the $Ac^{224}$ was measured and the energy of its alpha-particles identified as the result of its collection in recoil experiments. Similarly, the half-life and alpha-particle energy of the $Fr^{220}$ could be determined by second order recoil experiments from plates containing only $Ac^{224}$ (and daughters). The very short half-life of $At^{216}$ was estimated as described above and its energy could be determined by measurements on samples containing its progenitors. The half-lives and energies are summarized in Table I.

If the protactinium fraction is examined in the alpha-particle pulse analyser within six minutes of the end of a short deuteron bombardment at 190 Mev another alpha-particle decay series can be observed. The alpha-particle groups decay with a 1.5 minute half-life giving way to the groups of the $Pa^{227}$ series. The use of a "jiffy probe" in the 184" cyclotron permits the quick expulsion of a target from the cyclotron chamber with a decrease of only a factor of ten in beam intensity. This method plus fast chemical separations makes it possible to observe the short lived protactinium series. Tentatively this series has been assigned to $Pa^{226}$, making it a collateral branch of the (4n + 2) radioactive family as follows:

$$_{91}Pa^{226} \xrightarrow{\alpha} {}_{89}Ac^{222} \xrightarrow{\alpha} {}_{87}Fr^{218} \xrightarrow{\alpha} {}_{85}At^{214} \xrightarrow{\alpha} {}_{83}Bi^{210}_{(RaE)} \xrightarrow{\beta} {}_{84}Po^{210}$$

$$_{84}Po^{210} \xrightarrow{\alpha} {}_{82}Pb^{206} \quad \text{(stable)}$$

However identification is not positive since the short half-life of the series and the problem of obtaining an absolutely pure protactinium sample in a short time has so far precluded any search for $Bi^{210}$ (RaE) growing $Po^{210}$ in the daughters of the series. Similarly no $Th^{226}$ (and daughters) have been observed from orbital-electron-capture branching of the protactinium isotope. It has not yet been possible to obtain estimates for the half-lives of the members in this series beyond protactinium. It is interesting to note that there appears in this series an alpha-particle group of energy within a hundred kilovolts or less of the $Po^{212}$ (ThC') alpha-particle energy --- to date the most energetic alpha-particle group known. The half life of $Pa^{226}$ (?) and roughly estimated energies for the members of this series are summarized in Table I.

Prominent in a uranium fraction soon after short alpha-particle bombardments of thorium are a number of alpha-particle groups which decay with a 7 minute half-life. These are due to the following collateral branch of the (4n) radioactive family:

$$_{92}U^{228} \xrightarrow{\alpha} {}_{90}Th^{224} \xrightarrow{\alpha} {}_{88}Ra^{220} \xrightarrow{\alpha} {}_{86}Em^{216} \xrightarrow{\alpha} {}_{84}Po^{212} \text{ (ThC')} \longrightarrow {}_{82}Pb^{208}$$

(stable)

The branch which arises from orbital electron capture by $U^{228}$ is not shown. The mass type was identified by observation of the characteristic energy (and decay with the 7 minute half-life of the uranium parent) of the $Po^{212}$ (ThC') alpha particles and the growth of 22-hour $Pa^{228}$ as an orbital-electron-capture branching decay product of the $U^{228}$ (ratio $K/\alpha = \sim .25$). The short half-life of the parent $U^{228}$ and the poor ratio of $U^{228}$ to $U^{229}$ obtained in alpha particle bombardments of $Th^{232}$ makes half-life determinations for the other members of this series difficult. The measured half-life of $U^{228}$ and energies for the members of this series are summarized in Table I below.

After the decay of the above described uranium series, a second group of alpha-particle emitters remain. This second series, decaying with the 1 hour half-life of its parent, $U^{229}$, is a collateral branch of the (4n + 1) radioactive family as follows:

$$_{92}U^{229} \xrightarrow{\alpha} {}_{90}Th^{225} \xrightarrow{\alpha} {}_{88}Ra^{221} \xrightarrow{\alpha} {}_{86}Em^{217} \xrightarrow{\alpha} {}_{84}Po^{213} \text{ (NpC')} \xrightarrow{\alpha} {}_{82}Pb^{209} \xrightarrow{\beta^-} {}_{83}Bi^{209}$$

(stable)

The branch which arises from orbital-electron-capture of $U^{229}$ is not shown. The mass type was identified through observation of the characteristic energy (and decay with the 1 hour half-life of the uranium parent) of the $Po^{213}$ (NpC') alpha particles and the growth of 1.5 day $Pa^{229}$ as an orbital-electron-capture branching decay product of the $U^{229}$ (ratio $K/\alpha = \sim 50$ if assume ratio of $Pa^{229}$ $K/\alpha = 1000$). The half-life of the $Th^{225}$ was measured and the energy of its alpha-particles identified as a result of its collection in recoil experiments. A second-order

recoil experiment designed to collect atoms of $Ra^{221}$ and measure their half-life indicated that the $Ra^{221}$ has a half-life less than about 3 or 4 seconds. Coincidence measurements have not as yet been made to approximate the half-lives of $Ra^{221}$ and $Em^{217}$, experimentally. The half-lives and energies are summarized in Table I.

It should be noted that the orbital-electron-capture branching of $U^{229}$ affords an excellent method for obtaining $Pa^{229}$ free from all other protactinium isotopes, as well as other alpha particle emitters. Only about 300 alpha counts of $Pa^{229}$ can be made at present during one bombardment by this method but it does afford considerable opportunity to study the radiation characteristics and branching of the $Pa^{229}$ isotope.

The data listed in Table I extend the information on the isotopes of uranium, protactinium, thorium, actinium, radium, francium, emanation, and astatine so that more interesting correlations[4] of mass and atomic numbers, etc., with alpha-particle decay energies and half-lives are possible.

---

1 Ghiorso, A., W. W. Meinke and G. T. Seaborg, Phys. Rev. (in press, Sept 15, 1948)
2 B. Karlik and T. Bernert, Naturwissenschaften 32, 44 (1944)
3 B. Karlik and T. Bernert, Naturwissenschaften 31, 492 (1943)
4 See e.g., J. Schintlmeister, Oesterr. Chem. Zt. 41, 315 (1938); A. Berthelot, Jour. de Phys. et Rad. (VIII) 3, 17 (1942).

Table I

Collateral Series Data

| Isotope | Radiation | $T_{1/2}$ | Energy(Mev) | K/α branch |
|---|---|---|---|---|
| $Pa^{228}$ | α | 22 h | 6.09 | 50 |
| $Ac^{224}$ | α | 2.5 h | 6.17 | 10 |
| $Fr^{220}$ | α | 30 s | 6.69 | |
| $At^{216}$ | α | $10^{-3}$ s | 7.79 | |
| $Pa^{227}$ | α | 38 m | 6.46 | .2 |
| $Ac^{223}$ | α | 2 m | 6.64 | |
| $Fr^{219}$ | α | $10^{-4}$ s | 7.30 | |
| $At^{215}$ | α | $10^{-4}$ s | 8.00 | |
| (?)$Pa^{226}$ | α | 1.5 m | 6.54? | |
| $Ac^{222}$ | α | | 6.94? | |
| $Fr^{218}$ | α | | 7.81? | |
| $At^{214}$ | α | | 8.74? | |
| $U^{229}$ | α | 1 h | 6.36 | 50? |
| $Th^{225}$ | α | 7 1/2 m | 6.57 | |
| $Ra^{221}$ | α | short | 6.74 | |
| $Em^{217}$ | α | short | 7.77 | |
| $U^{228}$ | α | 7 m | 6.65 | .25 |
| $Th^{224}$ | α | short | 7.17 | |
| $Ra^{220}$ | α | short | 7.45 | |
| $Em^{216}$ | α | short | 8.02 | |

## Neutron Deficient Heavy Isotopes

R. A. James, K. Street, D. A. Orth and G. T. Seaborg

The mass assignments of the 12-hour and 50-hour americium activities have been definitely established as $Am^{239}$ and $Am^{240}$ respectively. In deuteron bombardments of $Pu^{239}$ using $\sim$ 14 Mev deuterons both of these activities were produced in high yield. A similar bombardment of $U^{235}$ produced no detectable $Np^{234}$ showing that this energy is too low for the (d,3n) reaction on $U^{235}$. Assuming the neutron binding energies to be about the same in the americium isotopes as in the neptunium isotopes, no $Am^{238}$ should havebeen produced. Therefore, the 12-hour and 50-hour activities must be $Am^{239}$ and $Am^{240}$. A 10 Mev proton bombardment of $Pu^{239}$ gave only the 12 hour activity showing that the correct assignment is:

$Am^{239}$ - 12 hour, $Am^{240}$ - 50 hour.

The energy of the alpha-particles emitted by 12-hour $Am^{239}$ has been determined by pulse-analysis to be 5.77 $\pm$ 0.05 Mev.

Bombardments of $Pu^{239}$ with 80-120 Mev deuterons have produced a new americium isotope which decays by orbital electron capture with a half-life of 92 $\pm$ 5 minutes. The mass must be less than 239 and is probably 238 or 237. No alpha-particles have been observed in this activity. However, only very small amounts have been produced so it is possible that alpha branching may be observed when larger quantities are made. With larger samples it will also be possible to determine the energy of gamma-rays (if any) accompanying the decay.

The energy of the alpha-particles emitted by $Np^{235}$ has been determined as 5.06 $\pm$ 0.05 Mev. The extent of the alpha-branching is difficult to calculate because of the large excess of L x-rays over the number of K x-rays. Assuming that one K x-ray is emitted per disintegration and that the counting efficiency is 0.5% the alpha branching is $1.7 \times 10^{-3}$. However, if one assumes that one L x-ray is emitted per disintegration and that their counting efficiency is 2%, then the alpha branching is only $7 \times 10^{-5}$. It may be that this discrepancy is caused by the capture of L-electrons; on this assumption the correct value for the alpha branching is probably about $10^{-4}$.

$Pu^{232}$ has been produced by the bombardment of $U^{235}$ with 150 Mev helium ions. It decays by the emission of 6.6$\pm$0.1 Mev alpha-particles with a half-life of 25 minutes. Orbital electron capture branching has not been observed and must be small. The $Pu^{232}$ was identified through its decay into $U^{228}$ and other members of the series (see section by W. W. Meinke, A. Ghiorso and G. T. Seaborg).

## Preparation of Light Neptunium Isotopes

L. B. Magnusson, A. Ghiorso and G. T. Seaborg

The production of neptunium isotopes by high energy particle bombardment of various target materials in the 184-inch cyclotron is being investigated in greater detail. The bombardment of natural uranium with 100 Mev deuterons has been found to yield principally $Np^{239}$ (56 hr. $\beta^-$) and $Np^{236}$ (22 hr. $\beta^-$). Longer-lived Geiger counter activity from one or more electron capturing neptunium isotopes is also observable. A previously unknown neptunium isotope, $Np^{231}$, is also produced but in very low relative yield. $Np^{231}$ emits alpha particles of about 6.3 Mev energy but appears to decay principally by electron capture. The mass assignment is based on separations and identifications of the daughter, $Pa^{227}$ [1] from alpha decay. Separation of the uranium fraction showed an activity which is probably $U^{231}$ from electron capture decay. The half-life of $Np^{231}$ has been determined indirectly to be 53 min. by the decrease in the $Pa^{227}$ activity obtained by catching the $Np^{231}$ alpha-particle recoils. The alpha/electron capture branching ratio is of the order of 0.01. A detailed study of the radiations of $U^{231}$ is scheduled to permit an accurate calculation of the branching ratio.

The new technique[2] of thin foil bombardment may facilitate the neptunium isotope study. The target material is mounted as a thin film on 0.1 mil aluminum foil which is placed in the cyclotron beam. Deuterons of energy at least as low as 80 Mev go through the aluminum foil and target film without losing enough energy to become out of phase or to be scattered from the orbit. In contrast to a thick target bombardment in which a given particle can strike the target only once before being lost, the foil type bombardment permits a given particle to traverse the target many times. The foil technique is convenient and efficient for the bombardment of small quantities (ca 1 mg or less) of valuable target material. The complicating factors of thick target bombardment, furthermore, are avoided. Bombardment of $Np^{237}$ on Al foil, for example, produces $Np^{236}$ essentially free of other short-lived Np activities. The radiations of $Np^{236}$, hitherto practically unknown, are being measured as a step towards the resolution of the various Np activities produced in uranium bombardments.

---

[1] Ghiorso, A., W. W. Meinke and G. T. Seaborg, Phys. Rev. 74, 695 (1948)

[2] This method for obtaining maximum yields from limited quantities of target material was devised by A. Ghiorso, A. G. Thompson and B. B. Cunningham.

## The Isotope $Cm^{243}$

S. G. Thompson, B. B. Cunningham and A. Ghiorso

The isotope $Cm^{243}$ was found as a result of the bombardment of $Am^{241}$ with 40 Mev helium ions. Most of the americium was separated by precipitaton with hypochlorite from $K_2CO_3$ solution. Most of the remaining americium was separated on a Dowex 50 resin column by citrate elution. Differential pulse analysis of the alpha radioactivities in the curium peak revealed that most of the activity was that of $Cm^{242}$ of energy 6.08 Mev corresponding to a disintegration energy of 6.18 Mev. There was, however, a small percentage ($\sim$5%) of alpha radioactivity of energy 5.78 Mev as shown in Fig. 1. The characteristics of this alpha emitting isotope do not correspond to those of the well known curium isotopes $Cm^{240}$ and $Cm^{241}$. It must therefore be $Cm^{243}$ or $Cm^{244}$ with $Cm^{243}$ being most probable because of the higher yields of reaction products resulting from the emission of more than one particle from the compound nucleus. Strictly speaking it is possible that this new isotope is $Cm^{244}$ or even an isotope of element 97. However, the energy of the alpha particles corresponds well with what would be predicted for $Cm^{243}$ on a basis of general relations observed in the heavy region. If the assignment is correct, the half life estimated by yield considerations is about 10 years which also agrees well with predicted values.

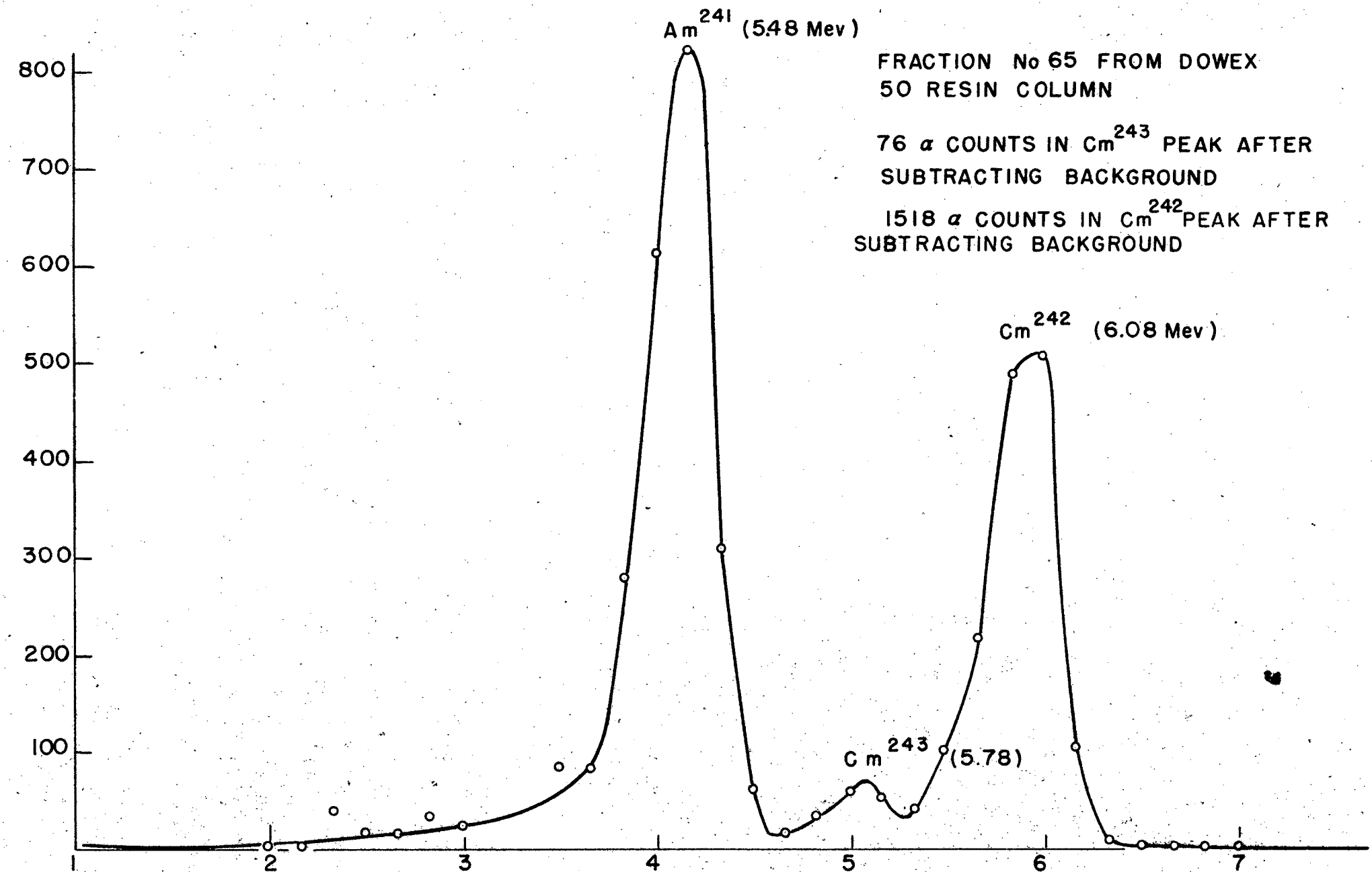


FIG. 1

DIFFERENTIAL PULSE ANALYSIS OF CURIUM FRACTION FROM BOMBARDMENT OF $Am^{241}$ WITH 40 Mev $He^{++}$

12949-1

## Long-Lived Isotopes of Bismuth and Lead

J. J. Howland and I. Perlman

An intensive search has been made for the very long-lived bismuth and lead isotopes which were not found in earlier studies with cyclotron irradiations of lead and thallium. In particular, no activities had been found which could be ascribed to $Pb^{205}$, $Bi^{205}$, $Bi^{207}$, and $Bi^{208}$. These isotopes appeared to have half-lives greater than 100 years.

Examination of larger targets which received longer deuteron or neutron irradiation has probably uncovered three of the missing isotopes, but some of the results are not certain as yet because of the low level of radioactivity.

A large yield (65,000 Geiger c/m) of long-lived bismuth activity was produced by deuteron bombardment of lead in October, 1947. On the basis of the yield relative to that of the known 6.4-d. $Bi^{206}$, the new activity, if it is $Bi^{205}$, should decay with a half-life of 100 years. Some of the acitivity may be due to $Bi^{207}$ or $Bi^{208}$. In 250 days no significant change has been detected in the counting rate of another sample of similar material.

A sample of bismuth which had been exposed to neutrons in a Hanford pile for 6 months was carefully purified with respect to all other elements, especially elements 84 to 96. Further purification procedures did not change its specific activity of 5 electron disintegrations/min/mg and 3 alpha-disintegrations/min./mg. If these activities are due to $Bi^{208}$ which might be produced by an (n,2n) reaction, the specific activity corresponds to a half-life of the order of $10^5$ years. Since there is considerable doubt about the flux of neutrons which had sufficient energy to cause this reaction, the above estimate of half life is not very reliable. The energy of the emitted alpha-particle was measured as $4.95 \pm 0.10$ Mev. From this and the disintegration energies of $Po^{208}$ and $Tl^{204}$ it is possible to calculate that $Bi^{208}$ is about 0.4 Mev unstable with respect to $\beta^-$ disintegration into $Po^{208}$ the 3 yr alpha-emitter. No daughter activities have been observed as yet.

Lead which had been in a Hanford pile 14 months was also purified. It was found to have a specific activity of only 0.6 electron disintegrations/min./mg. This experiment raised the minimum half-life estimate of $Pb^{205}$ to only $10^4$ years because of the low abundance and estimated low capture cross section of $Pb^{204}$. The same minimum was obtained from a negative attempt to find $Pb^{205}$ in the 65,000 c/m of probable $Bi^{205}$ 300 days after isolation of the bismuth. Deuteron bombarded thallium is expected to be a better source of $Pb^{205}$ and also of $Pb^{202}$, another unknown isotope.

## Neutron Deficient Bismuth Alpha-Emitters

H. Neumann and I. Perlman

Alpha emitting isotopes of bismuth on the neutron dificient side of stability have been produced by irradiation of lead with high energy deuterons[1]. Activities with half lives of 9 min., 25 min., and 1 hour have been observed.

The energies of the α particles were determined by the alpha particle pulse analyzer and by mica absorption. Values obtained are:

| | α energy (in Mev) | |
|---|---|---|
| Half-life | Pulse analysis | Mica absorption |
| 55 min | 5.15 | 5.30 |
| 25 min | 5.47 | 5.43 |
| 9 min | 5.83 | >5.6 |

The value of 5.30 Mev obtained for the 1 hr. activity by mica absorption is probably high, since the measurement was made when some 25 min. activity was still present, and the difficulty in making proper correction for the presence of this activity would cause a high result. No mica measurements were done quickly enough to obtain an accurate value for the 9 min. activity, but the limiting value of 5.6 Mev was observed.

The Geiger decay of α-active Bi samples has shown decay periods corresponding to the 25 min. and 1 hr. activities. The best estimate possible at this time of the α-K branching ratios are:

1 hr. activity - $7 \times 10^5$ K disintegrations per α disintegration

(within a factor of 10)

25 min. activity - $7 \times 10^4$ K disintegrations per α disintegration

(within a factor of 10)

No Geiger activity corresponding to the 9 min. α activity has been observed. Since the shortest bombardment was for 20 min., conditions are not the most favorable for the observation of this activity. A safe upper limit for the K-α ratio is $< 3 \times 10^3$ K disintegrations per α disintegration.

An attempt was made to determine the mass assignment of these Bi isotopes by observing the Tl daughters formed by α emission. This was done by collecting the recoiling Tl atoms on a collection plate held at a potential with respect to the radioactive source. No positive results regarding mass assignment of the Bi isotopes has resulted from these investigations.

---

[1] D. H. Templeton and I. Perlman, Phys. Rev. 73, 1211 (1948)

## High Energy Spallation and Fission Products of Uranium

P. R. O'Connor[1] and G. T. Seaborg

Natural uranium was bombarded with 380-Mev helium ions in the Berkeley 184-inch cyclotron in order to study the distribution in yield of the radioactive products. After each of the irradiations, amounting to some 25 in number, the metallic uranium (2 cm x 0.5 cm area and 0.1 cm thickness) was dissolved, and the yield in weighed chemical fractions of each of several isotopes was determined by means of counting experiments using a thin-window, bell-jar type Geiger-Mueller counter under conditions of known counting efficiency. Corrections were made for self-absorption, and for absorption by air and the mica window; back scattering was insignificant in comparison with other factors. Conventional alpha-particle counters and an alpha-pulse analyzer[2] were used for the alpha emitters. The yield for each isotope was determined relative to a standard isotope, the 12.8-day $Ba^{140}$, in order to compensate for the day-to-day variation in intensity of the helium ion beam. The results show what appears to be a continuous yield of radioactive products for the entire range of elements from the uranium region down to elements in the vicinity of atomic number 25. A plot of relative yield vs. the mass number of the radioactive products is shown in Fig. 1. The total cross section for the fission reaction (estimated from the area under the fission part of the curve) amounts to about $2 \times 10^{-24} cm^2$, but this value must be considered to be a very rough one, due to the unknown intensity of the helium ion beam. The errors indicated on this curve are estimated probable errors, arising from counting statistics, chemical operations, and correction factors applied.

There are several points of interest in connection with this distribution curve. The yield curve probably results from two essentially different types of reactions. Spallation reactions probably account for the products from the region of uranium down to those in the neighborhood of mass number 180-200, while the remainder of the curve is accounted for by the fission process. Isotopes with mass numbers 180-200 are more likely spallation products than fission products, and the small differences in yield in this region are not significant owing to the low levels of radioactivity produced. Not shown on the curve are a number of alpha-emitting isotopes with mass number in the neighborhood of 210 which were observed to be present in relatively high yield; these are believed to be products of alpha-emitting radioactive chains[3] originating from heavier isotopes which are found in higher yield as can be seen from the curve.

The distribution of fission products seems to show only a single peak in the region of maximum yield. These results are of course very much in contrast with the yield curve for slow neutron fission of $U^{235}$ and its very characteristic two peaks and deep valley in between[4]. This is not unexpected in view of the previously observed increased relative yield of fission products resulting from symmetrical cleavage as the energy of the bombarding particle is increased[5,6,7,8]. This single maximum is somewhat similar to that observed by Goeckermann and Perlman[9] in the fission of bismuth with 190-Mev deuterons, although the maximum of course, occurs at a higher mass number.

The data indicate but are not sufficiently accurate to prove that the maximum in the curve occurs at a mass number definitely less than one-half that of the initial compound nucleus formed in the reaction as is the case for bismuth fission and thus it cannot be said with certainty whether fission is preceded by the emission of a number of neutrons as in the mechanism proposed by Goeckermann and Perlman. Since uranium can undergo fission as the result of small excitation energy it is probable that some of the fission results from reactions in which only a fraction of the total energy of the helium ion is utilized to form a fissioning compound nucleus of mass around 240, a mechanism similar to that of slow neutron fission. Thus a number of mechanisms may prevail ranging from this one to that in which a number of neutrons are emitted before the fission process giving rise to symmetrical cleavage as the most probable process, with the latter mechanism perhaps predominating in view of the shape of the distribution curve.

The fission yield curve definitely extends to higher and lower mass numbers than is the case for the fission of uranium with lower energy particles. At the low energy end the products down to the region of atomic number about 27 seem definitely to be fission products but the source of the $_{24}Cr^{55}$ is doubtful in that the uranium may have contained sufficient iron impurity to account for the small yield of this isotope. It may be noted that if there are fission products with mass number as low as about 55 it should be expected that there be heavy fission products extending up to about mass number 180, and hence joining with the region of spallation products.

---

[1] Present address: Department of Chemistry, University of Minnesota, Minneapolis, Minnesota.

[2] See, e.g., A. Ghiorso, A. H. Jaffey, H. P. Robinson, "An Alpha-Pulse Analyzer Apparatus", Plutonium Project Record, 14B, 17.3 (1948)(to be issued).

[3] A. Ghiorso, W. W. Meinke, and G. T. Seaborg, Phys. Rev., (in press, Sept. 15, 1948 issue)

[4] "Nuclei Formed in Fission" Plutonium Project, J.Am.Chem.Soc. 68, 2411 (1946); Rev.Mod.Phys. 18, 513 (1946)

[5] Nishina, Y., K. Kimura, T. Yasaki and M. Ikawa, Nature, 146, 24 (1940); Phys.Rev., 58, 660 (1940); ibid, 59, 323 (1941); ibid, 59,667 (1941)

[6] E. Segrè and G. T. Seaborg, Phys.Rev. 59, 212 (1941).

[7] A. S. Newton, Phys. Rev., (in press).

[8] A. Turkevich, presented at meeting of A.A.A.S. in Chicago (December 1947)

[9] R. H. Goeckermann and I. Perlman, Phys.Rev. 73, 1127 (1948)

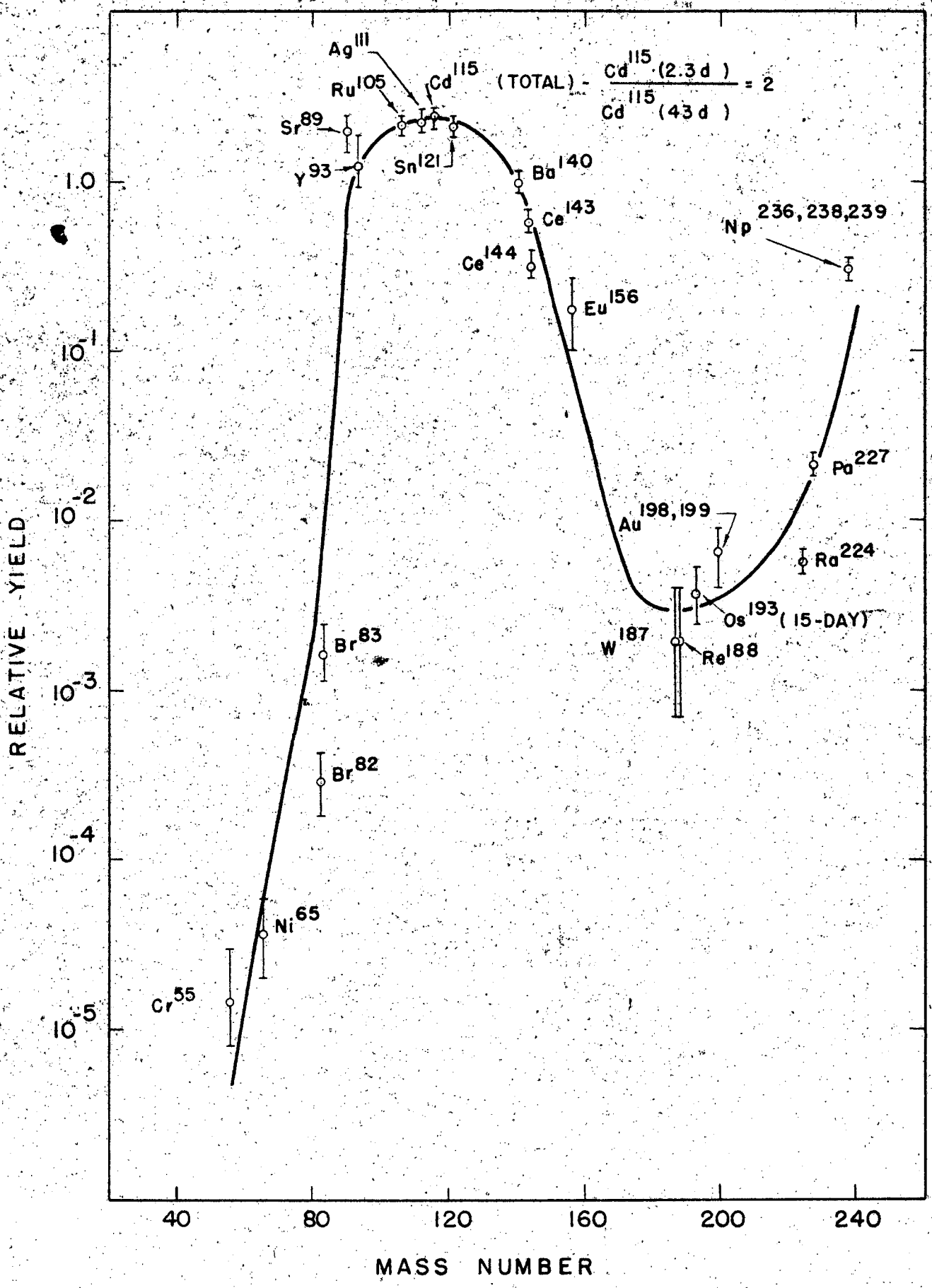


Fig. 1
Relative Yield Curve for Products from 380-Mev Helium Ion Bombardment of Uranium.

## The Fission of Bismuth with High Energy Particles

R. H. Goeckermann and I. Perlman

Fission of elements in the bismuth region of the periodic table with high energy particles was observed soon after the 184-inch cyclotron began operating, by Perlman, Goeckermann, Templeton and Howland[1] using chemical methods. With 380-Mev $He^{+2}$ ions, fission was detected as low as Ta in which the yield was approximately one-thousandth that in bismuth. The characteristics of the fission observed were markedly different from those of the slow neutron fission of $U^{235}$ and a detailed study was made of the fission of $Bi^{209}$ irradiated with 190-Mev deuterons part of which has been published[2].

In the fission of $U^{235}$, the most probable process yields two unequal fragments. The primary fission products have an excess of neutrons in all cases and are on the average three elements away from stability, whether on the light or heavy wing of the distribution curve. This means that there has been a redistribution of the neutrons and protons in the fissioning nucleus so that neither fragment has the n/p ratio of the compound nucleus, $U^{236}$. Another point connected with uranium fission is that with higher energy neutrons or charged particles, the fission cross section is a large part of the geometric cross section.

In contrast, the experimental-theoretical fission yield curve for 190-Mev $D^+$ fission of bismuth shows that the most probable process yields two nearly equal fragments of mass about 100. See Fig. 1. If we consider the fragments of all masses observed from the asymmetric cleavages as well, we find that the primary fission products of low mass have a slight excess of neutrons, those of high mass have slight deficiency of neutrons, and, since all observed fission products have roughly the same n/p ratio, an intermediate region exists where the fission products are, by inference, mostly stable. The fission yield of $Br^{82}$ observed must be that of its formation as a primary fission product--in slow neutron fission of $U^{235}$ its yield is about $10^4$ fold below the chain yield of that mass number, but in high energy bismuth fission about 1/3 of the fragments of mass 82 are Br. The ratio of 14 in yield between the 2.3 d. and 43 d. isomers of $Cd^{115}$ in $U^{235}$ fission is the result of their production by decay of a β-emitting precursor--in Bi fission the yield ratio is only 1.4, indicating their formation as primary fission products. Finally, the cross section for fission of $Bi^{209}$ with 190 Mev $D^+$ is approximately 1/15 of the geometric cross section.

The preceding characteristics of Bi fission can be explained quite well on the assumption of a simple theory of the process. We say that the highly excited nucleus ($Bi^{210}$ to $Po^{211}$) first boils off 10-12 neutrons, by which time fission competes with further neutron or charged particle emission and takes place in a fast process in which the fragments have the same n/p ratio of the parent. The reaction may be represented as: $Bi^{209} + D^+ \longrightarrow [Po^{211}] \longrightarrow 11n + [Po^{200}] \longrightarrow 2FP^*$. The symmetry of the fission and the production of a neutron-deficient and neutron-excess fragment, when a slight neutron redistribution

---

* It should be noted that $Po^{200}$ has about the same value of $Z^2/A$, the fissionability parameter, as $[U^{236}]$.

would give two stable fragments and a greater energy release in the fission process, lead us to deduce a higher rate process than slow neutron fission of $U^{235}$. On the basis of $Po^{200}$ as the fissioning nucleus, we can predict which element (or elements) should be the most probable primary fission products for each mass as indicated in the plot of fission yields (Fig. 1) and the tables I and II. The points on the plot represent individual isotopes measured and the sums of all isobars measured. For example: the predicted primary fission products for mass number 72 are Zn and Ga; when the independent yields of these are measured and added, the agreement with the smooth curve value is good. For mass number 124, the prediction is stable Te and neutron-deficient I; when the I and the neutron-excess isobar of Sb are measured, their sum is only 1/10 the total yield predicted so the other 9/10 is probably formed as the stable Te. For mass number 133, neutron-deficient Ba is predicted and found to be the major product.

When bismuth is bombarded at other energies (Fig. 2), it appears that the fission yield curve broadens somewhat and the fission cross section increases as the energy increases.

When the yield of fission is studied as a function of $D^+$ energy in two Pb samples of different isotopic composition (Fig. 3) by measuring the yield of $Mo^{99}$ (5% f.y. at 190-Mev $D^+$ on Bi), the results support our theory of the mechanism. With $Pb^{204}$ the reaction would be: $Pb^{204} + D^+ \longrightarrow [Bi^{206}] \longrightarrow 8n + [Bi^{198}] \longrightarrow 2FP$; while with $Pb^{208}$ the reaction would be: $Pb^{208} + D^+ \longrightarrow [Bi^{210}] \longrightarrow 12n + [Bi^{198}] \longrightarrow 2FP$. It is found that the ratio of $Mo^{99}$ yields between the lead enriched in $Pb^{204}$ and the lead enriched in $Pb^{208}$ increases as the $D^+$ energy decreases and the probability of boiling off the required number of neutrons therefore decreases. The trend of increasing sharpness of the yield curve peak with decreasing $D^+$ energy was observed in the Pb fission also to as low an energy as the activities could be observed.

---

[1] I. Perlman, R. H. Goeckermann, D. H. Templeton and J. J. Howland; Phys.Rev. 72, 352 (1947)

[2] R. H. Goeckermann and I. Perlman, Phys. Rev. 73, 1127 (1948)

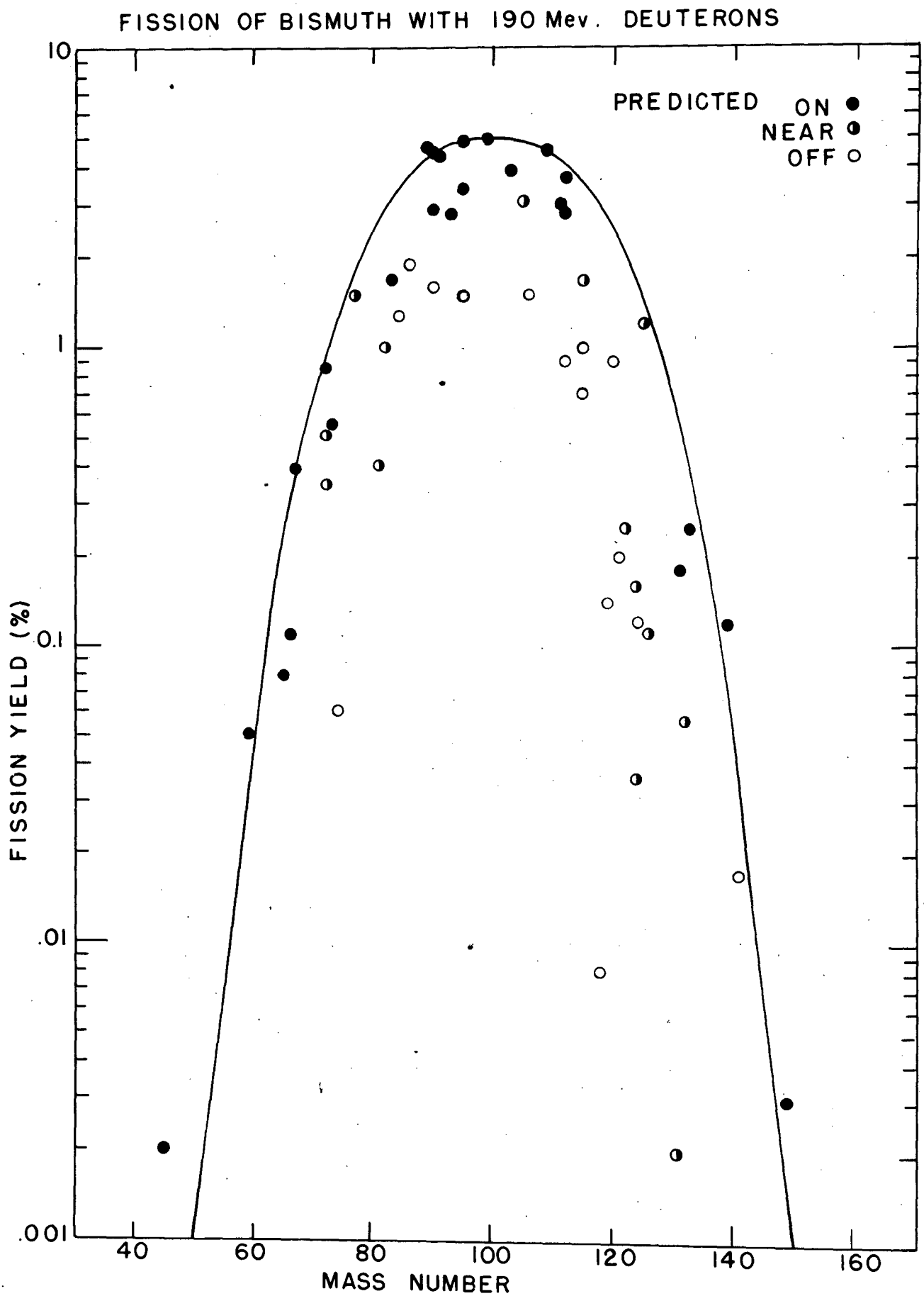


12925-1

FIG. 1

02-207

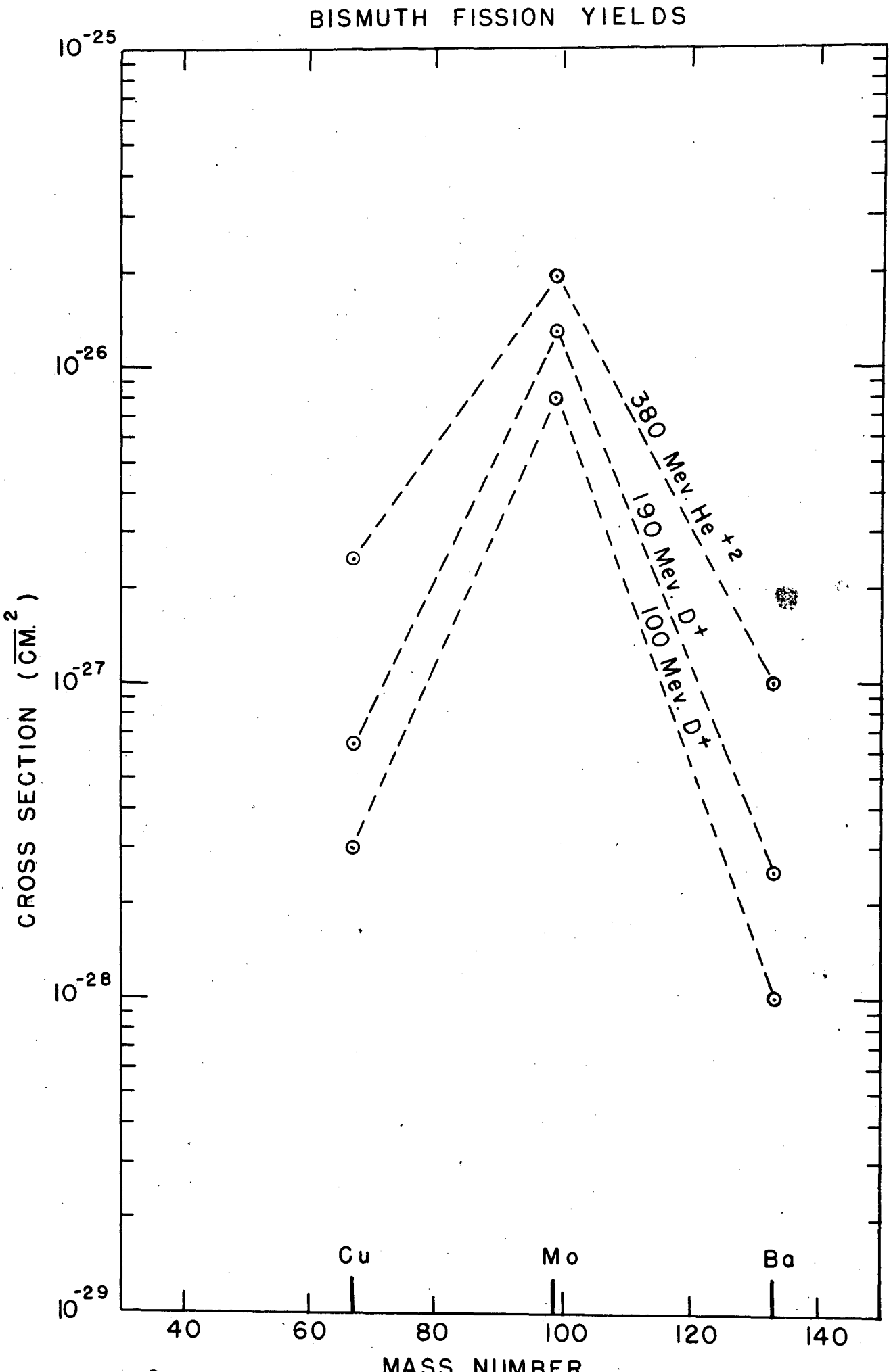
BISMUTH FISSION YIELDS
CROSS SECTION (CM.$^2$)
$10^{-25}$
$10^{-26}$
$10^{-27}$
$10^{-28}$
$10^{-29}$
380 Mev. He +2
190 Mev. D+
100 Mev. D+
Cu
Mo
Ba
40
60
80
100
120
140
MASS NUMBER

OZ-204

YIELD OF $Mo^{99}$
IN FISSION OF ISOTOPIC LEAD

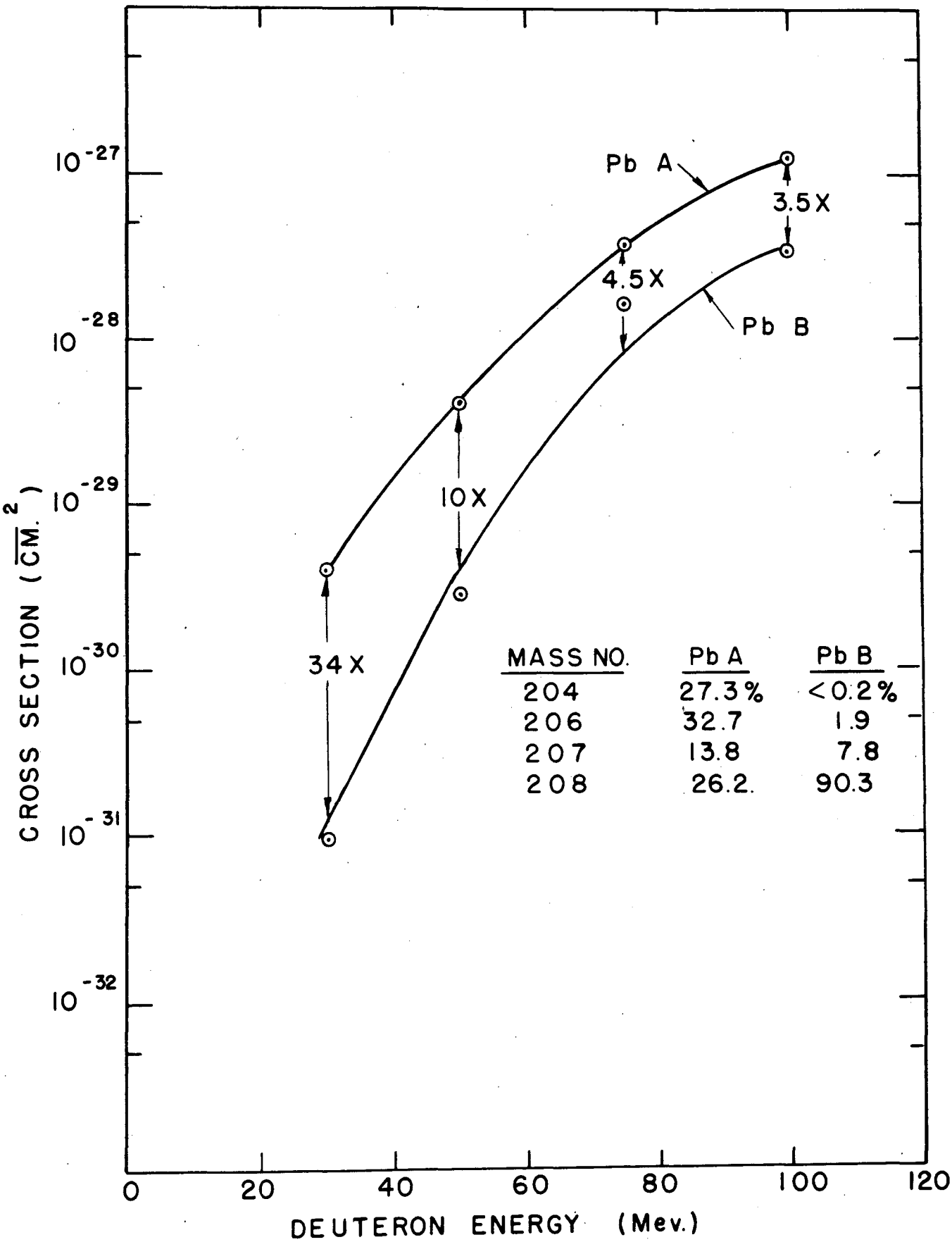


FIG. 3

OZ-205

FISSION OF BISMUTH WITH 190 Mev DEUTERONS

| Mass Number | Predicted Primary FP | FP Measured | Measured Yield (%) | Total Measured Yield for Mass Number | Predicted Fission Yield |
|---|---|---|---|---|---|
| 45 | K $\xrightarrow{\beta^-}$ Ca | Ca | 0.002 | 0.002 | 0.0002 |
| 59 | Mn $\xrightarrow{\beta^-}$ Fe | Fe | .05 | .05 | .04 |
| 65 | Co $\xrightarrow{\beta^-}$ Ni | Ni | .08 | .08 | .23 |
| 66 | Ni | Ni | .11 | .11 | .32 |
| 67 | Ni $\xrightarrow{\beta^-}$ Cu | Cu | .40 | .40 | .40 |
| 72 | Zn<br>Ga | Zn<br>Ga | .35<br>.51 | .86 | .93 |
| 73 | Ga | Ga | .55 | .55 | 1.1 |
| 74 | Ga | As | .06 | .06 | 1.2 |
| 77 | Ge<br>As | As | 1.5 | 1.5 | 1.9 |
| 81 | Se<br>$Se^m$ | $Se^m$ | .41 | .41 | 2.8 |
| 82 | Br<br>Se (stable) | Br<br>- | 1.0 | 1.0 | 3.0 |
| 83 | Br | Br | 1.7 | 1.7 | 3.2 |
| 84 | Br<br>Kr (stable) | -<br>Rb | 1.3 | 1.3 | 3.4 |
| 86 | Kr (stable) | -<br>Rb | 1.9 | 1.9 | 3.8 |
| 89 | Rb $\xrightarrow{\beta^-}$ Sr | Sr | 4.7 | 4.7 | 4.4 |
| 90 | Sr | Sr<br>Y | 2.9<br>1.6 | 4.5 | 4.5 |
| 91 | Sr $\xrightarrow{\beta^-}$ Y | Y | 4.4 | 4.4 | 4.6 |
| 93 | Y | Y | 2.8 | 2.8 | 4.8 |
| 95 | Zr | Zr<br>Cb | 3.4<br>1.5 | 4.9 | 4.9 |
| 99 | Cb $\xrightarrow{\beta^-}$ Mo | Mo | 5.0 | 5.0 | 5.0 |
| 103 | Tc $\xrightarrow{\beta^-}$ Ru | Ru | 3.9 | 3.9 | 4.95 |
| 105 | Ru<br>Rh | Ru | 3.1 | 3.1 | 4.9 |

TABLE. I

FISSION OF BISMUTH WITH 190 Mev DEUTERONS

| Mass Number | Predicted Primary FP | FP Measured | Measured Yield (%) | Total Measured Yield for Mass Number | Predicted Fission Yield |
|---|---|---|---|---|---|
| 106 | Rh | | | 1.5 | 4.8 |
| | | Ru | 1.5 | | |
| 109 | Pd | Pd | 4.6 | 4.6 | 4.6 |
| 111 | Ag | Ag | 3.0 | 3.0 | 4.2 |
| 112 | Ag | Ag | 2.8 | 3.7 | 4.1 |
| | Cd (stable) | - | | | |
| | | Pd | .9 | | |
| 115 | In (stable) | - | | 1.7 | 3.6 |
| | Cd (2.3 d.) | Cd (2.3 d.) | 1.0 | | |
| | Cd (43 d.) | Cd (43 d.) | .7 | | |
| 118 | Sn (stable) | - | | .008 | 3.0 |
| | | Te | .008 | | |
| 119 | Sn (stable) | - | | .14 | 2.7 |
| | Sb | | | | |
| | | Te | .14 | | |
| 120 | Sb (6 d.) | Sb (6 d.) | .90 | .9 | 2.5 |
| | Sb (17 m.) | | | | |
| | Sn (stable) | - | | | |
| 121 | Sb (stable) | - | | .2 | 2.3 |
| | | Te (143 d.) | .20 | | |
| 122 | Te (stable) | - | | .25 | 2.0 |
| | Sb | Sb | .25 | | |
| 124 | Te (stable) | - | | .16 | 1.6 |
| | I | I | .036 | | |
| | | Sb | .12 | | |
| 125 | I | I | 1.2 | 1.2 | 1.4 |
| | Te (stable) | - | | | |
| 126 | I | I | .11 | .11 | 1.2 |
| | Xe (stable) | - | | | |
| 131 | Cs | Cs | .002 | .18 | .54 |
| | Ba | Ba | .18 | | |
| 132 | Ba (stable) | - | | .06 | .45 |
| | Cs | Cs | .056 | | |
| 133 | Ba | Ba | .25 | .25 | .35 |
| 139 | Pr $\xrightarrow{K}$ Ce | Ce | .12 | .12 | .07 |
| 140 | Pr | | | .0004 | .05 |
| | | Ba | .0004 | | |
| 141 | Pr (stable) | - | | .017 | .03 |
| | Nd | | | | |
| | | Ce | .017 | | |
| 149 | Eu | Eu | .003 | .003 | .0015 |

OZ-206

TABLE II

## Radioactive Properties of the Heavy Rare Earths and Neighboring Elements

G. Wilkinson and H. G. Hicks

The study of radioactive isotopes of the rare earth elements, hafnium, tantalum, tungsten and rhenium is being continued. The accompanying table summarizes present knowledge of these isotopes. The symbols used are those employed by Seaborg and Perlman[1]; in addition, the presence of identified x-radiation is signified by "L" or "K" in column 6. Bombardments have been made with 38 and 20 Mev helium ions, 18 Mev deuterons, and 10 Mev protons from the 60-inch cyclotron. Bombardments of tantalum have been made with 200 Mev and 50 Mev deuterons from the 184-inch cyclotron.

---

[1] G. T. Seaborg and I. Perlman "Table of the Isotopes", University of California Report UCRL 179 (Sept. 1948)

Table I

| Isotope | Class | Type | Half Life | Radiation Energy Mev Particles | γ-rays | Produced by |
|---|---|---|---|---|---|---|
| $Tb^{152}$ | D | K | 4.5h | | K | Eu-α-3n |
| $Tb^{153}$ | D | $Ke^-$ | 5.1d | 0.15,0.4 | L,K | Eu-α-2n |
| $Tb^{154}$ | D | $\beta^+$,$Ke^-\gamma$ | 17.2h | $\beta^+$ 2.6;$e^-$0.22 ~1 | L,K,1.4 | Eu-α-n,3n |
| $Tb^{155}$ | D | $Ke^-$ | ~1yr | 0.1 | L,K | Eu-α-2n |
| $Ho^{160}$ | D | K? | ~20m | | K | Tb-α-3n |
| $Ho^{161}$ | B | $Ke^-\gamma$ | 4.5h | 0.3 | L,K,1.1 | Tb-α-2n, Dy-p-n |
| $Ho^{162}$ | B | $Ke^-\gamma$($B^-$?) | 65d | 0.16,0.6 | L,K | Tb-α-n,Dy-p-n,Dy-d-n 3n 2n |
| $Ho^{163}$ | B | $Ke^-$ | 7d | 0.4 | L,K | Dy-p-n |
| $Ho^{164}$ | D | $\beta^-$ | 35m | 0.7 | | Dy-p-n |
| $Tm^{166}$ | B | $\beta^+Ke^-\gamma$ | 7.7h | $\beta^+$2.1;$e^-$0.24, ~1 | L,K,1.5 | Ho-α-3n |
| $Tm^{167}$ | B | $Ke^-\gamma$ | 9d | 0.21 | L,K,0.22 0.95 | Ho-α-2n;Ta-d-5z16a |
| $Tm^{168}$ | B | $Ke^-$ | ~150d | | | Ho-α-3n |
| $Lu^{170}$ | B | $\beta^+Ke^-\gamma$ | 2.15d | $\beta^+$1.7 $e^-$0.1 | L,K,1.5 | Yb-d-2n-3n; Tm-α-3n, Ta-d-3z13a |
| $Lu^{171}$ | B | $Ke^-\gamma$ | 9d | 0.17,0.7 | L,K | Tm-α-2n;Ta-d-3z-12a |
| $Lu^{172}$ | B | $Ke^-\gamma$ | >100d | | | Tm-α-n; Yb-d-n,2n,3n |
| $Ta^{176}$ | B | $Ke^-\gamma$ | 8.0h | 0.12,0.18,1.2 | L,K,1.7 | Lu-α-3n;Ta-d-z,7a |
| $Ta^{177}$ | B | $Ke^-\gamma$ | 2.5d | 0.1 | L,K,1.5 | Lu-α-2n;Ta-d-z-6a |
| $Ta^{178}$ | B | $\beta^-$? | 16d | 1.3 | | Lu-α-n |
| $Ta^{179}$ | D | K? | long | | | $W^{179}$ K decay |

Table I (Cont'd)

| Isotope | Class | Type | Half Life | Radiation Energy Mev Particles | γ-rays | Produced by |
|---|---|---|---|---|---|---|
| $W^{179}$ | C | $Ke^-\gamma$ | 135m | 0.15,0.4 -0.5 | ~0.4 =0.5 L,K,1.2 | Ta-d-4n |
| $Re^{182}$ | B | $Ke^-\gamma$ | 64h | 0.11,0.27,0.6 | $L,K^{0.22}_{1.5}$ | Ta-α-3n;W-p-n |
| $Re^{183 \text{ or } 4}$ | C | $Ke^-\gamma$ | ~80d | 0.1 | L,K,1.0 | Ta-α-2n; W-p-n |
| $Re^{184 \text{ or } 3}$ | C | $K\gamma$ | 13h | | L,K,1.6 | Ta-α-n; W-p-n |

## Nuclear Reactions of Arsenic with 190 Mev Deuterons

H. H. Hopkins, Jr. and B. B. Cunningham

The nature and relative yields of a substantial number of the isotopes produced by bombarding natural arsenic[1] (100% $_{33}As^{75}$) with 190-Mev deuterons have been determined as part of a more comprehensive investigation of the nuclear reactions induced by high energy charged particles. A preliminary account of the work with arsenic has been published[2]. A tabular summary of this data is presented in Table I.

These investigations have been continued with the following objectives: (1) to extend the identification of the reaction products by using improved separation procedures, more rapid techniques and more comprehensive tests for identifying a particular isotope, and (2) to obtain more reliable yield figures by measuring chemical yields.

A summary of the more recent data is presented in Table II.

Experiments have been conducted to identify the light isotopes of Ge and Se. From a bombardment of Ge with 200-Mev $D^+$, the germanium fraction yielded a $\beta^+$activity of 22 m. due to $Ge^{67}$, the assignment proved by periodic milkings for 83-hr. $Ga^{67}$. A period of $\approx$ 150 m. was indicated for $Ge^{66}$, as shown by milkings for 9.4-hr. $Ga^{66}$.

After bombardment of Se with 200-Mev $D^+$, the Se fraction was examined in the $\beta$-ray spectrometer and showed a $\beta^+$ period of about 40 to 50 m.; milkings for $As^{71}$ indicated a half-life of about 50 m. This agrees with the previous assignment of $Se^{71}$, to a positron emitter of 44 min. half-life.

---

[1] Spectrographic analysis of the arsenic showed 0.0002% Cu as the only metallic impurity of atomic number that of Cu or higher, with upper limits of 0.003% for K and 0.0002% for each of the other metals. Impurities could not contribute significantly to the yields reported here.

[2] H. H. Hopkins, Jr. and B. B. Cunningham, Phys. Rev. 73, 1406 (1948)

[3] Parentheses signify identification based on half-life determination only.

[4] Most of the values cited will be found in:
G. T. Seaborg, Rev. Mod. Phys. 16, 1 (1944)

[5] The yield of $As^{72}$ corresponded to a cross-section of about $0.02 \times 10^{-24}$ $cm^2$.

[6] Figures in parentheses signify assumed counting efficiencies.

Table I

Isotopes Produced By $_{33}As^{75}$ + 190 Mev $D^+$

| Isotope | Type of Radiation[3] | Half-Life | | Yield[5] Rel $As^{72}$ [6] | Reaction △ | |
|---|---|---|---|---|---|---|
| | | Observed | Literature[4] | | △Z | △A |
| $_{34}Se^{75}$ | $(K,\gamma,e^-)$ | 120 d | 115 d | 0.11 (5%) | +1 | +0 |
| $_{34}Se^{73}$ | $\beta^+$ | 6.7 h | - | 0.09 | +1 | -2 |
| $_{34}Se^{72}$ | K | 9.5 d | - | 0.1 (100%) | +1 | -3 |
| $_{34}Se^{71}$ | $\beta^+$ | 44 m | - | 0.01 | +1 | -4 |
| $_{33}As^{74}$ | $\beta^-,\beta^+,\gamma$ | 19.0 d | 16 d | 1.1 | 0 | -1 |
| $_{33}As^{72}$ | $\beta^+$ | 26 h | 26 h | 1.00 | 0 | -3 |
| $_{33}As^{71}$ | $\beta^+$ | 52 m | - | 0.3 | 0 | -4 |
| $_{32}Ge^{71}$ | $\beta^+,K$ | 38 h<br>11.4 d | 40 h<br>11 d | 2<br>~2 (3%) | -1 | -4 |
| $_{32}Ge^{68}$ | K | 250 d | 195 d | ≈5 (100%) | -1 | -6 |
| $_{31}Ga^{68}$ | $\beta^+$ | 68 m | 68 m | 0.2 | -2 | -7 |
| $_{31}Ga^{67}$ | $K,\gamma,e^-$ | 83 h | 83 h | ~3 (5%) | -2 | -8 |
| $_{31}Ga^{66}$ | $\beta^+$ | 10 h | 9.4 h | ~0.1 | -2 | -9 |
| $_{30}Zn^{72}$ | $(\beta^-,\gamma)$ | ~50 h | 49 h | ≤0.001 | -3 | -3 |
| $_{30}Zn^{69}$ | $(\beta^-,I.T.,\gamma)$ | 51 m<br>14 h | 57 m<br>13.8 h | 0.07<br>0.05 | -3 | -6 |
| $_{29}Cu^{67}$ | $\beta^-$ | 61 h | 56 h | 0.02 | -4 | -8 |
| $_{29}Cu^{64}$ | $(\beta^-,\beta^+,K,\gamma)$ | 13 h | 12.8 h | 0.1 | -4 | -11 |
| $_{29}Cu^{61}$ | $(\beta^+,K)$ | 3.3 h | 3.4 h | 0.1 (100%) | -4 | -14 |
| $_{29}Cu^{60}$ | $(\beta^+)$ | ~20 m | 24.5 m | 0.06 | -4 | -15 |
| $_{28}Ni^{66}$ | $\beta^-$ | 56 h | 56 h | 0.002 | -5 | -9 |
| $_{28}Ni^{65}$ | $(\beta^-,\gamma)$ | 2.6 h | 2.6 h | 0.001 | -5 | -10 |
| $_{28}Ni^{57}$ | $\beta^+$ | 34 h | 36 h | 0.0002 | -5 | -18 |
| $_{27}Co^{61}$ | $(\beta^-)$ | 1.8 h | 1.75 h | 0.003 | -6 | -14 |
| $_{27}Co^{56-58}$ | $(\beta^+,\gamma,K)$ | ~80 d | 72 d | 0.06 (35%) | -6 | -19<br>-17 |

Table I (Cont'd)

| Isotope | Type of Radiation | Half-Life Observed | Half-Life Literature | Yield Rel $As^{72}$ | Reaction $\Delta Z$ | Reaction $\Delta A$ |
|---|---|---|---|---|---|---|
| $_{27}Co^{55}$ | $\beta^+, \gamma$ | ~16 h | 18.2 h | 0.003 | -6 | -20 |
| $_{26}Fe^{59}$ | $(\beta^-, \gamma)$ | 43 d | 47 d | 0.005 | -7 | -16 |
| $_{25}Mn^{56}$ | $(\beta^-, \gamma)$ | 2.6 h | 2.59 h | 0.002 | -8 | -19 |
| $_{25}Mn^{52}$ | $(\beta^+, \gamma, K)$ | 6 d | 6.5 d | 0.0002 (40%) | -8 | -23 |
| $_{24}Cr^{51}$ | $(K, \gamma, e^-)$ | 26 d | 26.5 d | 0.005 (5%) | -9 | -24 |

Table II

Some Isotopes Produced by $_{33}As^{75}$ + 190 Mev $D^+$

| Isotope | Type Radiation | Half-Life | Remarks |
|---|---|---|---|
| $_{32}Ge$ | $\beta^+$ | 1 hr. | This Ge activity has not yet been assigned. |
| $_{31}Ga^{70}$ | $\beta^-$ | 20 m | Observed in β-ray spectrometer. |
| $_{30}Zn^{72}$ | $(\beta^-)$ | 49 hr. | Observed from milkings of 14-hr $Ga^{72}$. |
| $_{30}Zn^{63}$ | $\beta^+$ | 38 m | Observed in β-ray spectrometer. |
| $_{30}Zn^{62}$ | K | 9.5 hr. | Radiation observed through 1 gm. Be. |
| $_{30}Zn^{65}$ | $(\beta^+, K)$ | 250 d. | Not followed long enough yet. |
| $_{29}Cu^{67}$ | $\beta^-$ | 62 hr. | Observed in β-ray spectrometer. Maximum energy 0.55 Mev. |
| $_{29}Cu^{62}$ | $\beta^+$ | 10.5m. | Observed in β-ray spectrometer. |
| $_{29}Cu^{61}$ | $\beta^+$ | 3.4 hr. | Observed in β-ray spectrometer definitely for the first time. |
| $_{28}Ni^{57}$ | $\beta^+$ | ≈36 hr. | Observed in β-ray spectrometer. Previous identification uncertain; the true yield is smaller than that reported[2]. |
| $_{27}Co^{55}$ | $\beta^+$ | 18 hr. | Definitely observed in β-ray spectrometer. |
| $_{26}Fe^{59}$ | $(\beta^-)$ | 47 d. | This is the only Fe isotope observed; $Fe^{52}$, $Fe^{51}$ are formed in yield $\ll$1% that of $Fe^{59}$. |
| $_{25}Cr^{49}$ | $(\beta^+)$ | ~42 m. | Observed for first time. |
| $_{27}Cl^{38}$ | $(\beta^-)$ | 38 m. | This period and a 1 hr. period $Cl^{39}$(?) are found in Cl fraction after halogen separation. |

## High Energy Spallation Products of Copper

D. R. Miller and G. T. Seaborg

The identity and yields of the radioactive products of the irradiation of natural copper (stable mass numbers 63 and 65) with high-energy deuterons and helium ions have been investigated. A total of ten 190 Mev deuteron bombardments were conducted, while two helium ion bombardments were run, one at 190 Mev and one at 380 Mev. After a 10- to 40-minute bombardment with a beam of about one microampere for the deuterons or of about 0.2 microampere for the helium ions, the spectrographically pure metallic copper target was dissolved in nitric acid, inactive carrier elements added, and chemical separations performed until pure elemental fractions were isolated. Measurements were then taken as aliquots of these fractions with a thin-window (ca 3 mg/cm$^2$ mica) Geiger-Muller counter. Half-life determinations were the main evidence in the identification of the radioactive spallation products, but supporting evidence was usually obtained by at least one of the following methods:

a) Energy determination by counting through varying thicknesses of aluminum or beryllium (for electrons) or lead (for gamma-rays).

b) Observation of parent-daughter relationships, where possible.

c) Determination of the sign of emitted electrons by counting them after passage through a magnetic field.

Two previously unreported isotopes were positively identified in the course of this work. Freshly precipitated zinc fractions showed a growth corresponding to about 10-minutes half-life, followed by a 9.5-hour decay. Chemical separation of copper from the zinc fractions showed that the 9.5-hour zinc was the parent of the 11-minute $Cu^{62}$; the 9.5-hour activity was therefore assigned to $Zn^{62}$. Comparison of the number of counts per minute of 11-minute $Cu^{62}$ separated from the zinc fraction with the total number of counts per minute in the zinc fraction indicated that $Zn^{62}$ decays by orbital electron capture. A 7.8-hour period was noted in the iron fractions and was shown by iron-manganese separations to give growth to a 21-minute manganese activity. An aluminum absorption curve of the parent-daughter equilibrium mixture showed, in addition to a component of ca 2.3 Mev attributable to the 21-minute $Mn^{52}$, a component of ca 0.6 Mev maximum energy, presumably due to the 7.8-hour parent, assigned to $Fe^{52}$.

The chlorine fractions always showed, in addition to the 37-minute $Cl^{38}$, a component with a half-life of about one hour. The ratios of the yields of the 37-minute to the one-hour isotopes produced in four different bombardments were 4.8, 3.8, 4.9, and 5.0; the numbers of silver chloride precipitations used in the chemical isolations were 1, 3, 1, and 3, respectively. The relative constancy of these yield ratios and the high specificity of the chemical procedure make it seem likely that the one-hour activity belongs to an isotope of chlorine; because of the high purity of the copper targets, it is difficult to see how this activity could be due to a bromine or iodine isotope. Since no positive particles were detected in these samples, the one-hour period might be a negative beta-emitter of chlorine at mass 39.

The identity and yields of the observed spallation products are summarized in

the accompanying table. The observed half-life listed in the fourth column represents either the best value or the average of several values. The yields resulting from 190 Mev deuteron bombardment (column 5) are in most cases average values, computed from the number of individual values enclosed in parentheses immediately following the average yield. All yields are expressed on an atom basis relative to $Cu^{61}$; using the previously mentioned values for the beam current, a relative yield of one is equivalent to a cross section of about $0.06 \times 10^{-24}$ $cm^2$.

The large number and wide distribution of radioisotopes formed in the spallation of copper are immediately evident; it is reasonable to assume that stable isotopes are also formed in good yields. The cross section for all the 25 observed radioisotopes is about $0.3 \times 10^{-24}$ $cm^2$. Since a total of 70-75 fairly well characterized isotopes(radioactive plus stable) exist for the elements in question, a total cross section close to the geometrical cross section (ca $1 \times 10^{-24}$ $cm^2$) is indicated.

About 85% of the total observed yield is made up of products with masses 60-65, and about 80% is represented by copper isotopes. If the total yield for each mass number is plotted against mass number, the maximum yield is shown at A = 61-62. The yields for $A \cong 50$-60 are approximately constant; this region accounts for about 15% of the total observed yield. There appears to be a sharp decrease in yield with decreasing mass number starting at $A \cong 45$-50.

These results are in agreement with the present concept of the mechanisms of high-energy excitations, as proposed by R. Serber. A continuum of excitation energies from zero up to nearly the full energy of the entire projectile particle is achieved by combinations and modifications of those basic mechanisms:

1) Single (or consecutive single) nucleon collisions

2) The stripping process

3) Amalgamation of the entire incident particle with the target nucleus.

Most of the spallation products of copper appear to result from excitations of less than about 50-75 Mev; this amount of excitation would be induced by the first two mechanisms. The products far removed from the target nucleus undoubtedly arise from a high degree of excitation by the third mechanism.

The data also indicate, as would be expected, that the excited nucleus preferentially emits neutrons rather than protons (up to a certain point), but that the emission of almost exclusively neutrons (or protons), followed by a series of rapid positron (or negative beta-particle) decays, is a relatively rare event.

High Energy Spallation

Products of Copper

| Isotope | Literature Type of Radiation | T 1/2 | Obs $T_{1/2}$ | Yield relative to $Cu^{61}$ 190 Mev $D^+$ | 190 Mev $He^{++}$ | 380 Mev $He^{++}$ |
|---|---|---|---|---|---|---|
| $_{30}Zn^{62}$ | (K) | 9.5h | 9.5h | 0.036(3) | --- | --- |
| $Zn^{63}$ | $\beta^+$ | 38m | 37m | 0.047(2) | --- | --- |
| $Zn^{65}$ | $\beta^+$,K | 250d | (250d) | 0.007(1) | --- | --- |
| $_{29}Cu^{60}$ | $\beta^+$ | 24.5m | 25m | 0.30(2) | --- | 0.18 |
| $Cu^{61}$ | $\beta^+$,K | 3.4h | 3.3h | 1.0(6) | 1.0 | 1.0 |
| $Cu^{62}$ | $\beta^+$ | 10.5m | 11m | 2.3(2) | --- | 2.4 |
| $Cu^{64}$ | $\beta^+$,$\beta^-$,K | 12.8h | 13h | 0.57(8) | 0.70 | 0.53 |
| $Cu^{67}$ | $\beta^-$ | 56h | - | - | <0.03 | <0.0006 |
| $_{28}Ni^{57}$ | $\beta^+$ | 36h | 38h | 0.04(2) | --- | 0.05 |
| $Ni^{65}$ | $\beta^-$ | 2.6h | 2.55h | 0.04(2) | --- | 0.057 |
| $Ni^{66}$ | $\beta^-$ | ca60h | --- | --- | --- | ≤0.02 |
| $_{27}Co^{55}$ | $\beta^+$ | 18.2h | 17h | 0.033(2) | --- | --- |
| $Co^{61}$ | $\beta^-$ | 105m | 103m | 0.14(2) | --- | --- |
| $Co^{62}$ | $\beta^-$ | 9.4h | --- | <0.001(2) | --- | --- |
| $_{26}Fe^{52}$ | $\beta^+$ | 7.8h | 7.8h | 0.003(4) | --- | --- |
| $Fe^{53}$ | $\beta^+$ | 8.9m | 9m | 0.07(2) | --- | --- |
| $Fe^{59}$ | $\beta^-$ | 47d | 48d | 0.067(5) | --- | 0.051 |
| $_{25}Mn^{51}$ | $\beta^+$ | 46m | 47m | 0.043(1) | --- | 0.038 |
| $Mn^{52}$ | $\beta^+$,K | 6.5d | 5.8d | 0.13(3) | --- | 0.12 |
| $Mn^{54}$ | K | 310d | (310d) | 0.09(1) | --- | --- |
| $Mn^{56}$ | $\beta^-$ | 2.89h | 2.5h | 0.15(2) | --- | 0.07 |
| $_{24}Cr^{49}$ | $\beta^+$ | 41.9m | 41m | 0.01(3) | --- | 0.009 |
| $Cr^{51}$ | K | 26.5d | 27d | 0.03(2) | --- | 0.024 |
| $_{23}V^{48}$ | $\beta^+$,K | 16d | 16.5d | 0.05(1) | --- | --- |
| $_{22}Ti^{45}$ | $\beta^+$ | 3.08h | 3.0h | 0.003(1) | --- | --- |
| $Ti^{51}$ | $\beta^-$ | 72d | 74d | 0.003(2) | --- | --- |
| $_{17}Cl^{38}$ | $\beta^-$ | 37m | 37.5m | 0.00050(2) | 0.00060 | 0.0033 |
| $Cl^{34}$ | $\beta^+$ | 33m | --- | <0.00005(2) | <0.00006 | <0.0003 |
| $_{15}P^{32}$ | $\beta^-$ | 14.3d | 15d | 0.0005(1) | --- | --- |

## Relative Yields of $Mn^{52}$ and $Mn^{56}$ from 190 Mev Deuterons on Elements 25 to 38

N. A. Bonner

The usual procedure for the study of spallation reactions is to bombard a particular element and attempt to identify all of the products of the bombardment. In order to obtain similar information in a different way, it was decided to bombard a series of elements and look for one or more particular isotopes, measuring the relative yields in each case.

Because of the convenient chemistry and half lives involved, the isotopes chosen were $Mn^{52}$(6.5 d) and $Mn^{56}$(2.59 h).

The elements bombarded were Cr, Mn, Fe, Co, Ni, Cu, Zn, Ge, As, Se and Sr.

The procedure was to bombard the element in the purest form available (usually 99.9+%), dissolve in conc. $HNO_3$, precipitate $MnO_2$ with $KClO_3$ from the boiling $HNO_3$ solution (after adding the necessary holdback carriers and a known amount of $Mn^{++}$ carrier) filter and wash. The precipitate was dissolved in $HNO_3$ + 30% $H_2O_2$ and the precipitations repeated twice more. For elements above Zn (at. no. 30) it was found necessary to precipitate As and Ge with $H_2S$ from 6N HCl, then precipitate MnS from ~1N NaOH with $H_2S$ in addition to the three $MnO_2$ precipitations. After the purification a suitable aliquot was mounted and counted with an end window Geiger counter.

The activities of the two Mn isotopes were corrected to infinite bombardment time. The $Mn^{52}$ activity was divided by 0.40 to correct for the fact that the decay is 35% $\beta^+$ and 65% K capture. In order to correct for different beam intensities and different sample areas, a piece of pure Cu foil was placed behind the target in each bombardment. The foil was cut so that it intercepted as nearly as possible the same part of the beam that the sample did. The Cu was purified by making two CuCNS precipitations and the 12.8 h $Cu^{64}$ activity measured. The Mn yields were then obtained relative to the monitor activity. Each activity was calculated in the units- counts/minute per millimole at the end of an infinite bombardment time.

The results obtained are given in the following table.

The yields of $Mn^{56}$ from Ge, As and Se are highly doubtful, since the first samples were not pure, but contained activities due to elements other than Mn. The value for the relative yields of $Mn^{52}$ and $Mn^{56}$ was obtained from H. H. Hopkins. The other yields are probably accurate to $\pm$ 15%.

The results are more or less what would be expected from previous work. The yields remain more or less constant until about 4 atomic numbers above Mn, then begins to fall off. At a point six or seven atomic numbers above Mn, the yield falls off rapidly. By the time Sr is reached (13 atomic numbers above Mn), the yield has fallen off by a factor of $10^4$ to $10^5$.

The low ratio of $Mn^{52}/Mn^{56}$ from Co might possibly be due to the possibility of the production of $Mn^{56}$ by (n,$\alpha$) on $Co^{59}$ as suggested by I. Perlman.

Yields Relative to $Cu^{64}$ from Cu (200 Mev Deuterons)

| | $Mn^{56}$ 2.59h | $Mn^{52}$ 6.5 d. | $\frac{Mn^{52}}{Mn^{56}}$ |
|---|---|---|---|
| $_{25}Mn$ | 0.298 | 2.16 | 7.2 |
| $_{26}Fe$ | .419 | 2.55 | 6.1 |
| $_{27}Co$ | 1.07 | 2.11 | 1.97 |
| $_{28}Ni$ | .308 | 2.18 | 7.1 |
| $_{29}Cu$ | .329 | .545 | 1.17 |
| $_{30}Zn$ | .131 | .305 | 2.33 |
| $_{31}Ga$ | - | - | - |
| $_{32}Ge$ | $4.8 \times 10^{-2}$ | $8 \times 10^{-3}$ | .17 |
| $_{33}As$ | $(5 \times 10^{-3})$ | $5.25 \times 10^{-4}$ | (0.1) |
| $_{34}Se$ | $<1.2 \times 10^{-2}$ | $5.5 \times 10^{-4}$ | $>.05$ |
| $_{35}Br$ | - | - | |
| $_{36}Kr$ | - | - | |
| $_{37}Rb$ | - | - | |
| $_{38}Sr$ | $6.2 \times 10^{-5}$ | $<1.8 \times 10^{-5}$ | $<.3$ |

## Abnormal Increase in Atomic Number in Nuclear Reactions

D. H. Templeton and I. Perlman

In bombardments of bismuth and lead with high energy deuterons and helium ions, respectively, in the Berkeley 184-inch cyclotron we have observed isotopes of astatine (element 85) as transmutation products. Each of these reactions is unusual in that the atomic number Z of the product exceeds by one unit the sum of the atomic numbers of the reacting nuclei. In heretofore observed reactions products have Z equal to or less than this sum.

The experiments dealt chiefly with the isotope $At^{211}$, which was identified by the following distinctive properties[1]. It decays with a 7.5-hour half-life, 40% by emitting 5.9 Mev alpha-particles and 60% by electron capture followed rapidly by the 7.4-Mev alpha-decay of the daughter $Po^{211}$. This pair of alpha groups is easily resolved with the alpha pulse analyzer[2] and is identified by energy measurement and half-life determination. The formation of one alpha-particle per disintegration makes the sensitivity for detection good and the computation of yield simple.

Two lighter astatine isotopes with half-lives 4.5 hr. and 1.7 hr and alpha-particle energies 5.66 Mev and 5.76 Mev have been observed in helium ion bombardment of bismuth. The decay is probably chiefly by electron capture, and the branching fractions have not been established. In the lead-helium ion and bismuth-deuteron bombardments there was consistent evidence for the presence of these isotopes from the decay curves and the pulse analyses, but the resolution does not warrant yield computations.

Bombardments were done with the metal sample mounted on the cyclotron probe at different radial distances to get particles of various energies. Astatine was separated from the metal targets by two chemical procedures, based on precipitation of tellurium carrier and astatine with sulfur dioxide and on the distillation of astatine directly from the target at 400°C. The yield of $At^{211}$ was computed from the observed alpha-activity of the separated astatine.

The small but appreciable yields at low energies are not significant because of possible helium contamination of the deuteron beam and bismuth impurity in the lead. (The cross-section for $(\alpha,2n)$ reaction on bismuth increases sharply with decreasing energy down to about 30 Mev.) However, at 380 Mev the $(\alpha,2n)$ cross-section for bismuth falls to about $10^{-28}$ $cm^2$, and is not enough to explain the observed yield from helium ions on lead. Uranium and thorium impurities of 20 ppm in the lead are enough to produce the observed effect, but the lead is known to be purer than this by a factor of ten or more.

Negative beta-decay of an excited state of $Po^{211}$ is unreasonable because $At^{211}$ is unstable by electron capture, and because excitation of the nucleus does not decrease beta half-lives fast enough for it to compete with neutron, proton, or alpha emission.

The lead reaction is explained if a negative meson is ejected from the

compound nucleus:

$$Pb^{208} + He^{4} \longrightarrow Po^{212} \longrightarrow At^{211} + \mu^{-} + n$$

The mechanism has not been proved, but it is consistent with the observations of Gardner and Lattes[3] that negative mesons are produced with alpha-particles of this energy.

The analogous reaction for bismuth:

$$Bi(d,\mu^{-})At^{211}$$

is less likely because of the higher yield. A reasonable mechanism involves the production of secondary alpha-particles in spallation reactions, with a cross section of the order of $10^{-26}$ $cm^2$. These low energy alphas would make $At^{211}$ by $(\alpha,2n)$ reactions with good yield.

The secondary reaction mechanism is less satisfactory for the lead case because it involves production of lithium ions; such a mechanism cannot be ruled out, however.

---

[1] D. R. Corson, K. R. MacKenzie and E. Segrè, Phys. Rev. 58, 672 (1940)
[2] See A. Ghiorso, A. H. Jaffey, H. P. Robinson and B. Weissbourd, "An Alpha-Pulse Analyzer Apparatus", Plutonium Project Record, 14B, 17.3 (1948) (to be issued)
[3] E. Gardner and C. M. G. Lattes, Science 107, 270 (1948)

## B. Chemistry of Astatine and the Preparation of Certain Compounds

G. L. Johnson, R. F. Leininger, E. Segrè

### Chemistry of Astatine

#### Search for New Isotopes

One three hour bombardment of Bi with α-particles was performed using the full energy of the 184-inch cyclotron on a thick target. A separation of astatine from polonium and fission products was effective using techniques previously described[1,2]. In the report of 1940 the difference in carrying of Te reduced by $SO_2$ and Te reduced by $SnCl_2$ was reported.

The process used consisted of a double distillation of astatine from bismuth and polonium in vacuo followed by alternate Te products and by-products and halogen by-products. The separation was completed four hours after the end of the bombardment. No activities were observed that could not be attributed to previously observed astatine isotopes (210, 211, 212). Since I. Perlman and co-workers have observed two alpha activities of astatine (1.7 hr and 4.5 hrs) under conditions in which longer half lives would have been observed, our search was entirely for possible K electron capture or γ emitting isotopes. Under our conditions, half lives of the order of one month could have been detected if the cross section for production of that isotope had been of a moderate magnitude (0.1 barn or greater).

#### Volatility Experiments[2]

Additional experiments have been completed on the volatility of astatine from solution. The results are summarized in the following table.

Table I

Distillation of Astatine Solutions

| Initial Solution containing At | Percent of At in each successive ml of Distillate | | | | | | | | | Percent left in Still | Material Balances in percent |
|---|---|---|---|---|---|---|---|---|---|---|---|
| | (1) | (2) | (3) | (4) | (5) | (6) | (7) | (8) | (9) | | |
| 48% HBr | 0 | 0 | 0 | 0 | 0 | 0 | 0 | 0 | 0.1 | 107 | 107 |
| ~20% HI | 0 | 0 | 0 | 0 | 0 | 0 | 0 | 0.2 | 0.6 | 94 | 95 |

Since free bromine and free iodine were present in both distillation the above result is taken to indicate that astatine does not readily form these intrahalogen compounds.

#### Electrochemistry

The electrochemistry of astatine has been studied further. In a previous

report[2] the critical deposition potentials of astatine were reported.

Deposition of astatine on a gold cathode - 1.22 ± 0.025 volts

Deposition of astatine on a gold anode - 1.45 ± 0.02 volts

All potentials are with respect to a normal $H_2$ electrode.

If a small amount of free bromine is added (a slight color of $Br_2$), while astatine is being deposited at the cathode, all deposition immediately stops. There is no effect on the anodic deposition. These effects we interpret in the following manner. Various oxidation species are present in solution and different ones are responsible for cathodic and anodic deposition. The one deposited at the anode is in a higher oxidation state than the one deposited at the cathode and bromine is a good enough oxidizing agent to oxidize the lower state qualitatively to the higher.

Preliminary experiments to determine the effect of pH on the critical deposition potential at the cathode, in an effort to determine the reaction taking place there, have been only partially successful. The work has been discontinued for the present but will be resumed at a later date.

Carrying Experiments

The carrying of astatine by HgS as a function of pH in HCl has been rechecked. The carrying (ratio of activity in the supernatent to the sum of the activity in the precipitate and supernatent x 100) was consistantly 99-100% in 1-5 M HCl, while the material balances ranged for 85-100%. CdS in 0.3 M HCl carried 80-90% of the astatine. No good theory for the carrying of astatine by the various sulfides has been evolved as yet. Possible explanations are. (1) reduction to the zero state and adsorption on the precipitated sulfide or (2) reduction to the minus one state and carrying as a metal astatide coprecipitated with the metal sulfide. Cadmium sulfide as a carrier was of interest in that cadmium iodide is quite soluble therefore the astatide would possibly also be soluble.

A mercuric sulfide precipitate containing carried astatine was shaken with carbon tetrachloride for two hours at the end of that period no activity was found in the carbon tetrachloride. This negative result is not as conclusive as a positive result would have been, therefore noting can be said at the present time as to mechanism of the carrying of astatine by the metallic sulfides.

The carrying of astatine by AgI after $SO_2$ reduction is not as clean cut as previously reported. When TlI is precipitated after $SO_2$ reduction the carrying is low ranging from 25-40%. In the course of experiments to clarify these results it was observed that $SO_2$ slowly reduces $Ag^+$ to the zero state. In a previous report[2] the carrying of astatine by metallic silver was reported and the anomalous carrying of silver and thallous iodide can be explained on this basis even though no visible metallic silver precipitate was present in the silver iodide experiments.

As a check four aliquots of the same astatine solution were treated as described on the following page.

| | % Centrifuged out after 15 minutes | | | % Centrifuged out after 15 minutes | |
|---|---|---|---|---|---|
| | (1) | (2) | | (3) | (4) |
| Treated with Saturated $SO_2$ | 8 | 14 | Treated with 2 Mg $Ag^+$ | 7 | 21 |
| Supernatent from above treated with 2 Mg $Ag^+$ | 51 | 62 | Supernatent from above treated with saturate $SO_2$ | 65 | 59 |
| Left in final Supernatent | 14 | 8 | Left in final Supernatent | 10 | 3 |
| Material Balance | 73 | 84 | Material Balance | 82 | 83 |

In the above experiments no visible precipitates were observed.

In view of these results we concluded that $SO_2$ incompletely reduces astatine (TlI carrying) but that the combinate of carrying of silver iodide and metallic silver carries astatine completely.

Since a more powerful reducing agent is required, a very small Jone reductor was used. Slightly more activity was found to stick to amalgamated zinc than to plain zinc. Using zinc as the reducing agent and precipitating silver or thallous iodide in the absence of the reducing agent complete carrying has been found.

Therefore, $SO_2$ is insufficient to reduce astatine, but, zinc reduces it completely. The experiments indicate that $SO_2$ forms an equilibrium mixture of astatine in the reduced and the unreduced states.

From the oxidation potentials involved we estimated that the potential for the reduction of astatine from the zero to the minus one state is approximately 0.0 volts in our solutions ($10^{-11}$ - $10^{-13}$ M.) No corrections to a standard state can be made at the present time since we have no indication as to the molecular species present in these extremely dilute solutions.

Preparation of Special Compound for Physics Experiments.

Lithium hydride and lithium deuteride have been prepared for use in scattering experiments. The method used was that described by Vanino in Handbuck de Preparativen Chemie (1925). Metallic lithium in an iron boat was heated to 500°C in a slow stream of hydrogen or deuterium.

Nine grams of LiH were prepared and 6.7 grams of LiD were prepared with a yield of 60% of the deuterium converted to the deuteride.

The experiment to change the half live of $Be^7$ by compound formation is being extended. The relative half lives of $BeF_2$ and BeO will be measured.

The trial runs for the preparation of BeF have been completed. The thermal decomposition of $(NH_4)_2 BeF_4$ in a stream of $CO_2$[3] produced a good glass like product. However, the yield was poor since the decomposition temperature (800°C) is close to the boiling point of $BeF_2$. The method[4] to be used is the hydrofluorination of beryllium hydroxide in a platinum boat at 210°C in a stream of anhydrous HF followed by sintering the product at 375°C. Good yields of a pure product have been obtained in trial preparations.

---

[1] Corson, MacKenzie and Segrè, Phys. Rev. 58, 672 (1940)
[2] Johnson, Leininger and Segrè, Quarterly Report Dec. 1947-Feb. 1948
[3] Gmelin Handbuck der Anorganische Chemie (1909)
[4] H.A. Wilhelm, Private Communication

## C. Bio-Organic Chemistry

B. M. Tolbert

### Synthetic and Experimental Chemistry

#### Alcohols and Halides-$C^{14}$.

The preparation of $C^{14}$-labeled methanol, ethanol, and propanol from carbon dioxide or the corresponding free acid has been investigated using lithium aluminum hydride as a reducing agent. Equipment and techniques have been worked out which have proved very satisfactory in routine use; the major difference in the procedures used and those described in current literature is that vacuum systems have been used wherever possible. Thus in the preparation of methanol, the carbon dioxide is absorbed in the lithium aluminum hydride and dissolved in diethyl carbitol in a vacuum line reaction. The alcohols have been isolated and identified by their boiling points and indices of refraction, but the yield of the reaction has been determined by conversion of the alcohol to the corresponding iodide or bromide which may be purified and weighed. Barium carbonate can be converted to methyl iodide in over 94% yield in less than one day's time for the entire procedure. The yield of the halides from the acetic and propionic acids are equally satisfactory. In the latter cases, the free acid is prepared by treatment of the sodium salt with dry hydrogen chloride gas. In this manner, both of the labeled bromides and all three of the labeled propyl bromides can be produced.

#### Stilbamidine.

The synthesis of low activity stilbamidine from cyanide has been completed. An overall yield of about 25% based on potassium cyanide was obtained with the product material having an activity of about 10,000 counts per minute per milligram. A high activity preparation is in progress which will produce stilbamidine with a specific activity of about 6 millicuries per mmole. Preliminary data on the biochemistry of this material will be described in a later section of this report.

Tryptophan-3-$C^{14}$. Tryptophan labeled in the 3-position of the indole nucleus has been prepared as follows:

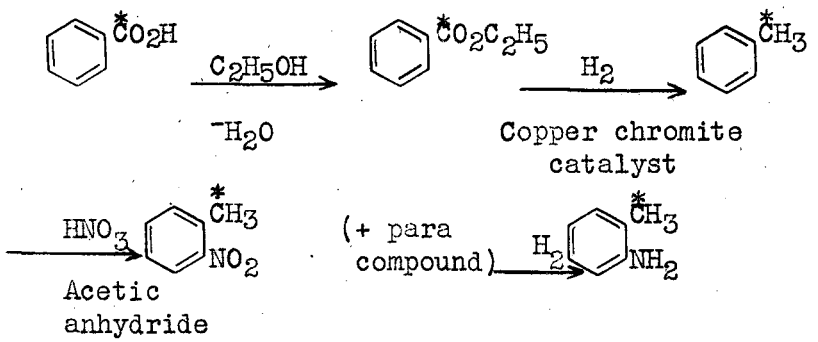

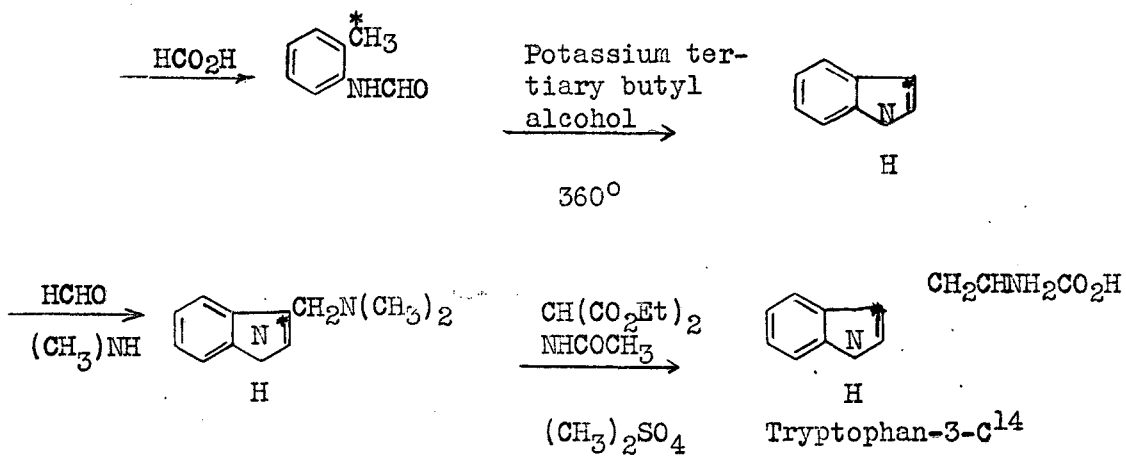


D-glucose-1-$C^{14}$ and D-mannose-1-$C^{14}$.

The preparation of synthetic $C^{14}$ labeled D-glucose and D-mannose has been completed. The primary reactions involved are the preparation of nitromethane and the condensation of this with D-arabinose (the five-carbon aldehyde) to form a mixture of nitro sugars; the various isomers were then separated and hydrolyzed to give glucose and mannose. The reaction sequence and outlines of the preparation details are as follows:

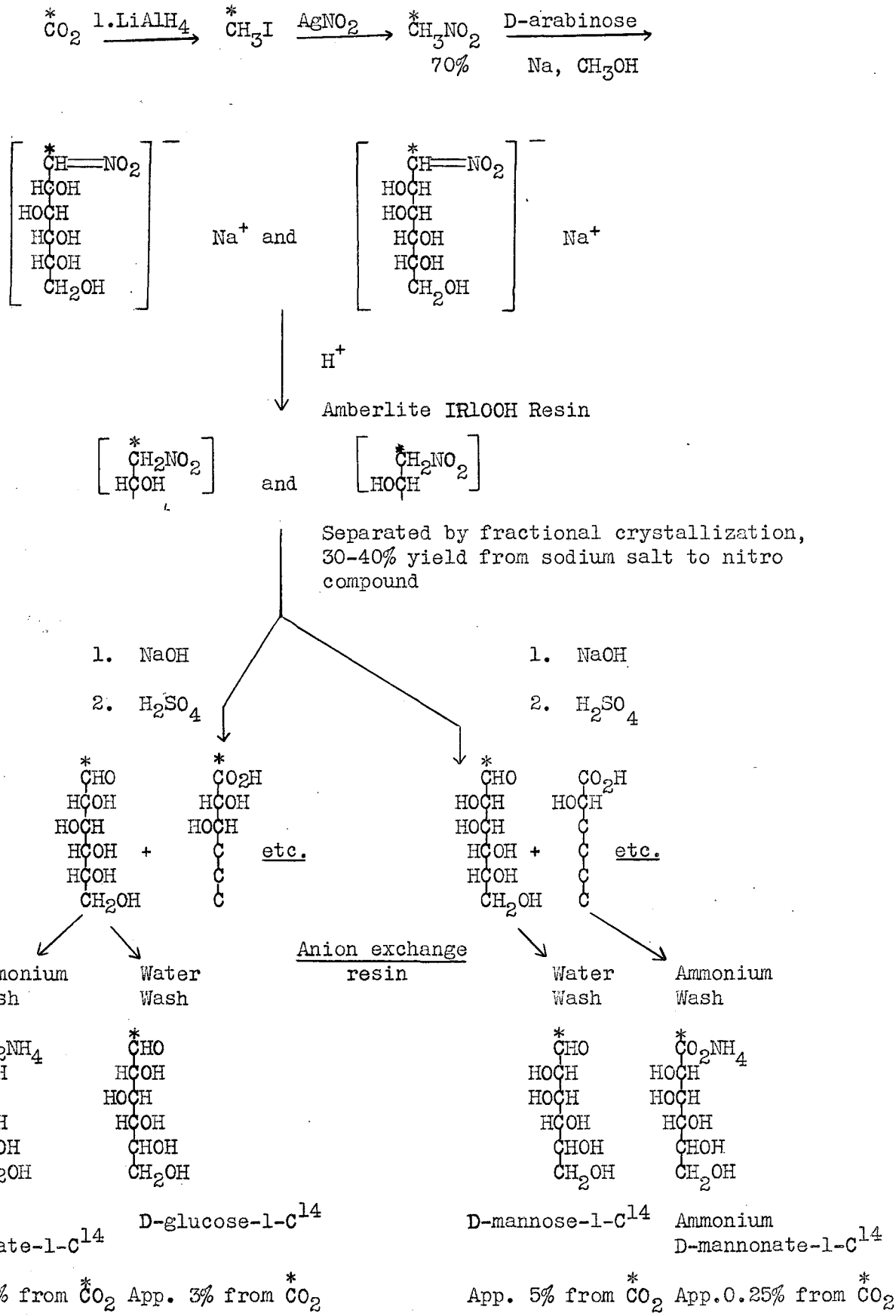
$^*CO_2$ 1.LiAlH4 $^*CH_3I$ AgNO2 $^*CH_3NO_2$ 70% D-arabinose Na, CH3OH
Na+ and
Na+
H+
Amberlite IR100H Resin
and
Separated by fractional crystallization, 30-40% yield from sodium salt to nitro compound
1. NaOH
2. H2SO4
1. NaOH
2. H2SO4
etc.
etc.
Anion exchange resin
Ammonium Wash
Water Wash
Water Wash
Ammonium Wash
Ammonium D-gluconate-1-C14
D-glucose-1-C14
D-mannose-1-C14
Ammonium D-mannonate-1-C14
App. 0.5% from *CO2
App. 3% from *CO2
App. 5% from *CO2
App.0.25% from *CO2

Using this method, 125 mg. of D-glucose-1-$C^{14}$ with a specific activity of 1200 disintegrations per minute per milligram and 50 mg. of D-mannose-1-$C^{14}$ with a specific activity of 1100 disintegrations per minute per milligram have been prepared by forced co-crystallization with inactive material. This glucose was then converted to lactic acid by Lactobacillus Casei. In this process, the glucose molecule is assumed to split between the 3- and the 4-carbon atoms, with these carbon atoms giving rise to the carboxyl group of the lactic acid. In the experiments using the synthetic glucose, the carboxyl group of the lactic acid was found to contain only that amount of activity to be expected from over-oxidation of the lactic acid during the chemical degradation. The remainder of the first warm run of glucose and mannose is now crystallizing; this process is usually a relatively slow one and cannot be easily hurried. At the same time, a high specific activity preparation is in progress.

Benzoic Acid-$C^{14}$.

Benzoic acid with a very high specific activity, approximately 20 microcuries per milligram, has been prepared in about 95% yield from carbon dioxide on an 8 mmole scale. Part of this material is to be used to prepare beta-labeled phenylalanine.

Biological Metabolites.

Studies on the improved synthesis of glycine using resin exchange columns are in progress. The study of the preparation of the 3-labeled alanines, choline, and acetylcholine are continuing.

Benzene-$C^{14}$.

A practical method for the synthesis of ring-labeled compounds has occupied the attention of this group for some time. In the work to date $C^{14}$ ring-labeled compounds have been prepared but the preparations devised have not been by good yield or reasonably short procedures. The first of these methods involved the condensation of carbonyl-labeled pyruvic acid and the dehydrogenation of this product to uvitic acid. Subsequent decarboxylation produced toluene as follows:

$$\overset{*}{C}O_2 \xrightarrow[2.H^+]{1.CH_3MgI} CH_3\overset{*}{C}O_2H \xrightarrow[1.CuCN]{1.PBr_3} CH_3\overset{*}{C}OCO_2H \xrightarrow[2.H_2SO_4]{1.NaOH}$$

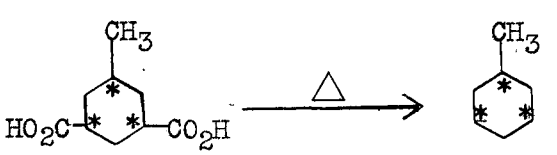


The yield was low.

The second method tried was cyclization of heptene-1-$C^{14}$. In none of the preparations was the heptene-1-$C^{14}$ yield very high, primarily because of poor decomposition of the quaternary ammonium salt.

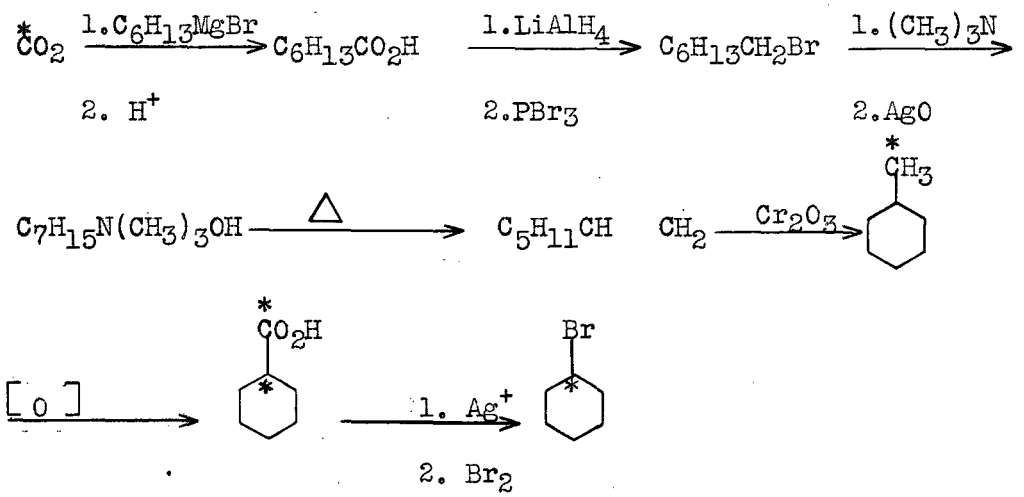


The yield of the toluene from the olefin was about 30% per pass, and the subsequent steps involving the oxidation of the toluene to the benzoic acid and the decomposition of the benzoic acid to bromobenzene makes this method rather impractical for the synthesis of ring-labeled compounds.

The next methods tried involved Diels-Alder type condensations. Thus, the following series of reactions were investigated:

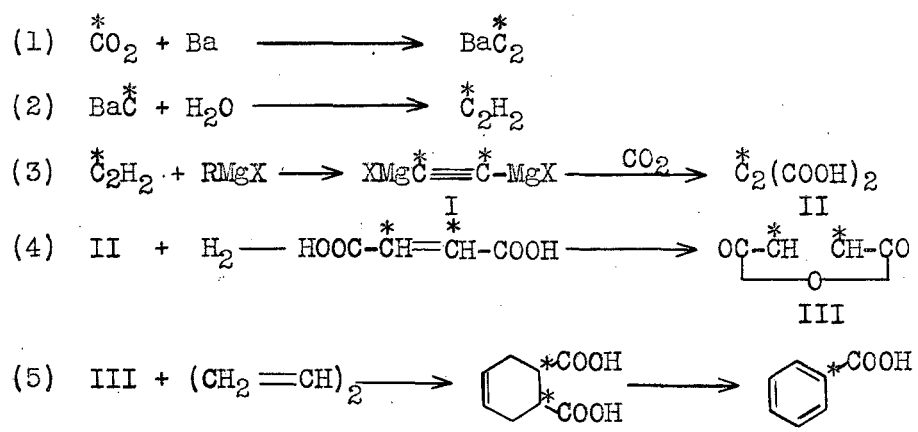


It was found, however, that step (3) could not be carried out with a reasonable yield, although a large variety of conditions were investigated and some study was made of the reaction on a macro scale.

The possible formation of calcium acetylene dicarboxylate by the high temperature and pressure carbonation of calcium carbide was also investigated. The experiments indicated that no reaction occurred between these materials even when the temperature was 335°C and the carbon dioxide pressure was 5700 psi.

An attempt was made to prepare $C^{14}$-labeled butadiene, and although several possible high-yield preparations have been devised, none of these has been adequately investigated yet in the laboratory. If butadiene can be prepared in satisfactory yields, it appears reasonable that its condensation with maleic anhydride and the subsequent decarboxylation of the ring-labeled compound should lead to a satisfactory method for the preparation of labeled benzene.

Malonic Acid.

The experiments on the decarboxylation of $C^{14}$ carboxyl-labeled malonic acid have been completed with the decarboxylation of two samples on a scale larger than that reported earlier. In two experiments, 6.0 and 10.0 mmoles of the carboxyl-labeled acid were decomposed by melting. The scheme for separation of the two active products was improved by minor changes in technique and apparatus so that the frequency ratios of breaking of the $C^{12}$-$C^{12}$ and $C^{12}$-$C^{14}$ bonds calculated on all bases agree within rather moderate experimental errors. In Table I below are compared the results obtained with both the large-scale and small-scale apparatus. The bases of calculation in Column 4 are (a) carbon dioxide and malonic acid, (b) malonic acid and acetic acid, and (c) carbon dioxide and acetic acid.

Table I

| | $F_{12-12}$ | $F_{12-14}$ | $F_{12-12}/F_{12-14}$ Bases | | |
|---|---|---|---|---|---|
| | | | A | B | C |
| Small Scale experiments (4) | 0.516±0.005 | 0.452±0.005 | 1.21±0.017 | 1.066±0.02 | 1.14±0.013 |
| Large scale experiments (2) | 0.531±0.016 | 0.474±0.015 | 1.13±0.03 | 1.11 ±0.03 | 1.12±0.03 |

Studies on the decarboxylation of $C^{14}$ carboxyl-labeled bromomalonic acid have been made and it has been found that the effect is similar to that observed for malonic acid. The ratio of $F_{12-12}/F_{12-14}$ was found to be 1.3.

## Biological Chemistry

Stilbamidine.

A preliminary experiment on the excretion of stilbamidine labeled with $C^{14}$ has been carried out on a dba mouse. After intravenous injection, a trace of activity appeared in the breath, about 2% of the administered dose in the urine, and the rest of the activity was eliminated with the feces. The respiratory

and the urinary excretions were not measureable after forty-eight hours. The fecal excretion, however, continued at a rate of about 5% per day. The activity of the stilbamidine used in these experiments was too low to permit investigation of tissue activities. A 2 mg. dose of the compound was well tolerated by the mouse. Further experiments will be carried out when the high activity material is prepared.

Tyrosine.

A study has been carried out on the relationship of tyrosine to glycogen formation. The literature on the glycogenic capability of tyrosine is somewhat ambiguous, although studies by Dunn and others have shown that the glycogenic activity is small. These studies were carried out on fasting rats using measurement of the net increase of the liver glycogen as the criterion of glycogenic power. This technique could conceivably give low results if glycogen turnover is rapid, in which case a considerable glycogen formation might be accompanied by only a slight net increase in total glycogen. The tracer technique, of course, would demonstrate glycogen formation if it occurred even though there were no net increase at all.

A second aspect of the problem is that if tyrosine can be demonstrated to form glycogen it must be capable of transformation into one of the intermediate compounds in the glycogenic sequence, and consequently can be converted to carbon dioxide by the sequence of reactions responsible for the combustion of glucose. It would not be necessary, of course, that all of the intermediate be first converted to glycogen before combustion, and, consequently, even a moderate formation of glycogen could be accompanied by a considerable formation of carbon dioxide. Thus, the demonstration of glycogenesis could constitute a strong inference that the extensive conversion of tyrosine to carbon dioxide which we have observed is due in part to a mechanism of this sort and not due entirely to the already known conversion via acetoacetate.

In addition to the possibility that tyrosine might be converted to one of the intermediates of glycolysis, it is possible that tracer might appear in the glycogen merely by incorporation via the Wood-Werkman reaction of carbon dioxide already formed from the tyrosine:

$$CH_3COCOOH + \overset{*}{C}O_2 \rightleftharpoons HOO\overset{*}{C}CH_2COCOOH \rightleftharpoons HOO\overset{*}{C}CH \quad CH\overset{*}{C}OOH$$

$$\longrightarrow CH_2=C(OPO_3H_2)\overset{*}{C}OOH + \overset{*}{C}O_2$$

$$CH_2=C(OPO_3H_2)\overset{*}{C}OOH \rightleftharpoons \ldots \rightleftharpoons CH_2(OPO_3H_2)\overset{O*}{\overset{\|}{C}}CH_2OH$$

$$\rightleftharpoons CH_2(OPO_3H_2)\underbrace{COH\overset{*}{C}HOH\overset{*}{C}HOH}_{O}CHCH_2OPO_3H_2 \rightleftharpoons \text{glucose}$$

This process would lead to glucose labeled in the 3 and 4 positions, whereas if one of the glycolytic intermediates such as oxalacetic acid were formed, the tracer would appear in the 1, 2, 5 and 6 positions of the glucose.

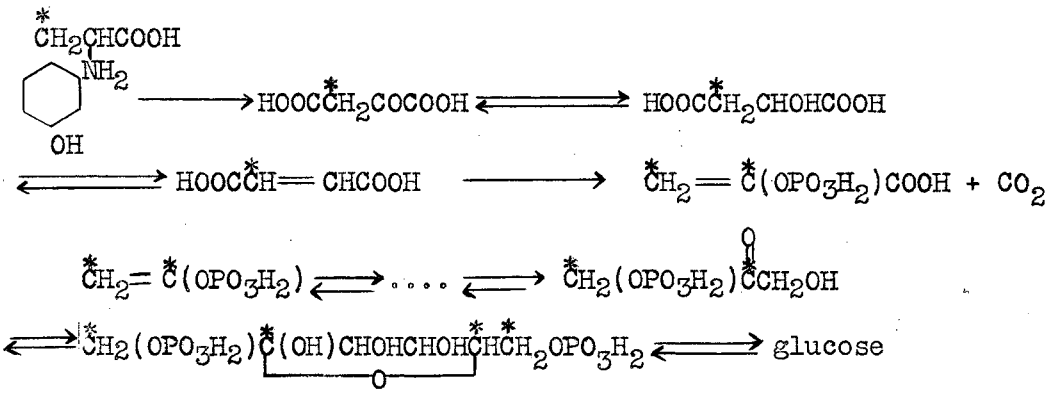

The experiment consisted of the administration of 500,000 counts of dl-tyrosine labeled in the beta position to a normal, unfasted white rat. At the end of five hours the rat was killed and the liver was taken. The impure glycogen isolated from the liver showed a slight activity which rose moderately on repeated reprecipitation. The glycogen was then hydrolyzed to glucose which was also active, but its specific activity was less than that of the glycogen. On formation of the diacetone derivative it remained active, and the osazone of the glucose was active. The final specific activity was of order of 1/2 count per minute per milligram. The amount of glucose obtained was too small to permit degradation experiments. From the very small amount of activity incorporated it seems likely that it arises simply from incorporation of carbon dioxide. This process, of course, does not involve any net increase in carbon fixed as glycogen.

Isolation of tyrosine from the hydrolyzed liver showed that only slightly more than half of the total activity in the liver was present as unchanged tyrosine. In view of this extensive metabolism it seems probable that the failure to observe activity in the glycogen did not result from killing the animal too early, particularly in view of the fact that previous investigators have frequently taken their animals from four to six hours after administration of test substances.

Tryptophan.

Tryptophan labeled with $C^{14}$ in the 3-position of the ring was fed to rats; N-methylnicotinamide was then isolated as a picrate from the urine and shown to be active. The position of the label has not been established.

## Photosynthetic Chemistry

Paper chromatography is being used extensively as a major tool in the analysis of metabolism processes in plants. Since the separation of compounds by this method is a function of distribution between liquid phases and not absorption, it is applicable to the separation of tracer amounts of metabolic intermediates. In this process a small aliquot of the solution to be analyzed is evaporated on a 1 cm. area near the corner of an 18" by 22" sheet of filter paper. One edge of the sheet is then immersed in a trough of water-saturated phenol. When the solvent has traversed the paper, the components of the original sample are distributed as spots in a line. After drying, an adjacent edge of the paper is immersed in a water-saturated solution of lutidine which is allowed to traverse the paper. Thus, the components are distributed in characteristic positions on the whole sheet of paper, dependent upon their relative distribution coefficients between wet paper

and the organic phase. After drying, radioautographs of this sheet are made by exposing them to X-ray film for three hours to two weeks depending upon the amount of radioactivity involved. Ninhydrin color tests give the location of amino acids which serve as markers for the other radioactive components.

With this technique, complex mixtures of compounds can be unequivocally analyzed in a few days with little labor. With classical methods, the same results can be obtained only with months of labor, and in many cases the results are very uncertain. It is felt the importance of this technique in this type of research cannot be overemphasized.

Using this method, the photosynthetic products of Scenedesmus algae have been fed $C^{14}O_2$ and analyzed. With a relatively long time of photosynthesis with $CO_2$ the labeled products are apparently largely sugar and alanine; the latter is incorporated rapidly in proteins. In the case of Scenedesmus which have photosynthesized for 5 minutes, approximately 30-40% of the fixed activity is water soluble, probably protein in nature. As the time of photosynthesis is decreased a number of interesting phenomena are observed, and a description of the result of radioautographs of the paper chromatograms is included below.

a. 5-minute photosynthesis: The two sugars, glucose and fructose, occur in amounts approximately equal to that of alanine; there is relatively less aspartic acid produced and a sugar phosphate is found which travels less far on the paper chromatograph than that synthesized in the 5-second experiment and which occurs in somewhat smaller amounts than either of the sugars.

b. 30-second photosynthesis: The two sugars are found in about equal amounts and are faintly discernible on the radioautograph. The major radioactive products are the sugar phosphate intermediates. The ether extractable components (malic acid, alanine, and aspartic acid) occur to the extent of about 10% of the total activity.

c. 15-second photosynthesis: No evidence of sugar is found in the radioautograph. The amounts of alanine and aspartic acid are smaller relative to the amount of phosphorylated intermediates.

d. 5-second photosynthesis: Only one major spot appears; this corresponds to the phosphorylated intermediate which travels farthest on the chromatogram in the lutidine solvent and scarcely at all in the phenol. The correlation between these $C^{14}$ radioactive phosphorylated intermediates and the same compound containing $P^{32}$ is underway. The fact that the majority of the $P^{32}$ activity in a radioautograph coincides with the $C^{14}$ radioactive areas indicates that these are probably the same compound. The identity of these active materials will be determined in further work. Of primary interest, of course, is the single intermediate formed during the 5-second photosynthesis which corresponds closely to a well-separated $P^{32}$ active area.

The sugar fractions separated using ion exchange resins give a radioautograph for fructose and glucose areas with detectable traces of other neutral substances. The anionic material which can be eluted only by sodium hydroxide from the anion gives a single active area, and on the basis of chemical evidence, it is now considered to be phosphoglyceric acid. It has been found possible to

fractionate materials of this sort on ion exchange resins. The cationic materials which are absorbed on the ion exchange resin have been chromatographed and shown to include alanine, aspartic acid, asparagine, beta-alanine, serine, phenylalanine, and no other substances in detectable amounts in the case of 30-second to 2-minute experiments.

No labeled glutamic acid has been observed except in experiments where the plants have been allowed to respire following a period of photosynthesis. Thus, it appears that glutamic acid is in equilibrium with respiration intermediates while aspartic acid is in equilibrium with oxalacetic acid involved in photosynthesis.

Pyruvate Metabolism.

A series of experiments are in progress to determine the path taken by $C^{14}$ which is given to photosynthesizing algae in the form of methyl-labeled pyruvate. It has been found that the optimum amount of activity is fixed at some time of illumination between 2 and 5 minutes. The activity fixed at 10 minutes is the same as that in the 5-minute experiments. In 5 minutes, 1 ml. of cells in 100 ml. of solution will fix approximately 80% of the activity given to them in the form of pyruvic acid (0.7 mmoles containing 3 microcuries). About 80-90% of the fixed activity is water insoluble but is extractable from the cells by alcohol. Partition experiments and paper chromatographs indicate that this activity is present in fatty acids. The possible presence of sugars and amino acids in the water soluble material is being investigated.

Isotope Effect.

On exposure of plants to light and radioactive $CO_2$ there is observed first a rise in the specific activity of the $CO_2$ and then a fall. This fall is probably due to respiration as it continues down with time, but the unusual rise in specific activity of the carbon dioxide can only be explained as due to an isotope effect in which the use of the $C^{22}O_2$ is quite clearly preferred over the $C^{14}O_2$ by the plants. This effect may amount to as much as 50% during the reduction of the partial pressure of the original $CO_2$ to one-tenth (for example, from 30 mm. down to 3 mm.).

# II QUARTERLY PROGRESS REPORT. PROJECT 48B

W. M. Latimer, Director

## A. Metals and High Temperature Thermodynamics

L. Brewer, N. Lofgren, A. Searcy, L. Kamm Templeton

R. Edwards, L. A. Bromley, R. McKisson

### Physical and Thermodynamic Properties of the Common Gases, Elements and Halides.

Four papers covering these topics and collectively referred to usually as the "Halide Report", are being corrected, revised, and brought up to date just prior to being sent to the printer for final publication. The work has largely been completed.

### Thermodynamics of the Gaseous Molybdenum Chloride System.

Hydrogen and Hydrogen chloride equilibrium data over molybdenum metal at high temperatures has been collected and evaluation of the species present in this system is in progress. Also the equilibrium constants themselves are to be evaluated. An integral part of the work has been the development of an analytical procedure for determining as accurately as possible small quantities of molybdenum of the order of 10 to 100 micrograms. A colorimetric procedure has been developed which fulfills this requirement within error limits of approximately 3 percent. At this stage the stable species appear to be the molecules $MoCl_2(g)$ and $MoCl_4(g)$, while the species $MoCl(g)$ and $MoCl_3(g)$ are still very uncertain. A mathematical treatment of the present data will probably indicate more precisely the exact stable species.

### Thermal Conductivity of Gases.

The data on the thermal conductivity of gases at elevated temperatures is very meager. If gases are to be used for heat transfer agents at high temperatures such data will be indispensible. From numerous considerations it was decided to measure the thermal diffusivity and from this to calculate the conductivity. Preliminary tests on the proposed electrical system indicate that it will be very satisfactory. Accordingly, work is continuing on this project.

### Thermodynamics of Carbon.

A paper reporting the results of work leading to the heat of sublimation of graphite and heat of formation and heat of dissociation of $C_2(g)$ has appeared in the Journal of Chemical Physics. Additional calculations have yielded the absolute transition probability in emission for the 0-0 transition in the $C_2$ Swan bands. The calculated $\underline{f}$ value of 4.3 with an uncertainty of a factor of only 3 or 4 checks very well with a value of 5.5 obtained by King who used absorption techniques. Both results are based upon the pressure of $C_2(g)$ in equilibrium with graphite as reported in the published paper.

Thermodynamics of CN.

The small glass spectrograph was refocused because structural changes in the graphite tube furnace necessitated disassembly of the spectrograph. Several preliminary runs have been made but none has yielded a good value for the heat of formation of CN from solid graphite and nitrogen. Very shortly, however, a satisfactory run should be made from which will result the heat of formation of CN, its pressure in equilibrium with nitrogen and graphite, its absolute transition probability, and perhaps the heats of dissociation of CN and $N_2$.

Thermodynamics of CH.

Several more exposures have been taken of the CH bands in an effort to determine the heat of formation from graphite and hydrogen. In each case, however, deterioration of the heated tube occurred before sufficient exposures could be obtained. A considerable amount of work has been carried out to prepared tubes more suitable than graphite. A tube of tantalum carbide appears to be most suitable. A request for a quotation on TaC tubes has been submitted to Pfanstiehl. Experiments on direct melting of tantalum and graphite powders in a graphite form above the 3300°C eutectic are being conducted. A satisfactory tube from these experiments may result. Tantalum and graphite powders react completely to form TaC at 2200°C but will not sinter at temperatures below at least 3000°C. In the course of this work temperatures in the neighborhood of 3500°C have been obtained in a graphite-packed quartz tube heated inductively. Heating Ta tubes in ethylene atmospheres gives only a thin superficial coating of TaC which flakes very easily. Wrapping graphite tubes with tantalum or tungsten also did not give satisfactory results.

Vapor Pressures and Heats of Sublimation of Metals.

Theoretical considerations indicate that the graphite tube furnace should be very useful for determining the vapor pressures and heats of sublimations of metals. Preliminary experiments have been performed on rhenium and osmium.

Refractories.

Further work with the Ta-Si system indicates that there are at least three phases between Ta and Si. Only previously known $TaSi_2$ has been identified from X-ray work. There are no phases between $TaSi_2$ and Si. The interior of a tantalum crucible that has been coated with a tantalum silicide by repeated exposure to silicon vapor at 1600 to 1800°C will be tested as a container for molten aluminum. Molybdenum and tungsten are not suitable as containers for Al at 1300°C. Tantalum, BeO, TaC, and $Al_4C_3$ coated on graphite appear from preliminary work to be suitable containers for Al above 1000°C.

Structure of Solids.

Lattice energy calculations and other theoretical studies are being continued on nitrides, phosphides, arsenides, oxides, sulfides, selenides, and tellurides of the alkaline earth metals.

Liquid Metal Systems.

Work on the low-melting Na-U-Bi alloy system is continuing. Some new apparatus for this purpose has been built. It is now planned to study the low melting region by X-ray analysis of solid phases which are to be obtained from the separation of the solid from equilibrium solid-liquid preparations. The design of the new high-temperature calorimeter has been completed and its construction has begun. An improved device using a liquid Na-K alloy for continuous removal of oxygen and water vapor from a dry box atmosphere has been constructed and tested. Alterations are being made to improve its action.

Thermodynamics of Gaseous Oxides and Hydroxides.

Knudsen effusion apparatus for the determination of the stability of the gases TiO, MgO, AlO and SiO has been partially completed. Preliminary Tests regarding suitable containers for the Al-AlO-$Al_2O_3$ system have been made.

Heats of Dissociation of $S_2$ and SO.

Both thermodynamic and explosion data have been considered in an effort to resolve the existing discrepancies in the heats of dissociation of $S_2$ and SO. No definite conclusions can be drawn at the present time. New experimental methods are under consideration.

## B. Basic Chemistry, Including Metal Chelates

R. E. Connick, W. H. Reas, Z. Z. Hugus, W. C. Orr,

K. L. Mattern, C. R. Hurley, G. R. B. Elliott

### Exchange of Iodine Atoms Between $I_2$ and $IO_3^-$.

The interpretation of the kinetic data for this system is made difficult because of the unknown degree of ionization of $HIO_3$ in the solutions employed. Therefore an attempt was made to measure the ionization of this acid spectrophotometrically. In addition the presence of a dimer was looked for on the basis of a suggestion of O.Meyers.

The molal extinction coefficients of $HIO_3$ and $IO_3^-$ appear to be very nearly the same. However, the molal extinction coefficient of the dimer differs appreciably from those of the above species. It is possible to measure the equilibrium constant for the dimerization spectrophotometrically and by studying this equilibrium as a function of the acidity the ionization constant of $HIO_3$ may also be determined. Work is in progress on the measurement of these equilibrium constants.

### Extraction of Lanthanum Into Benzene-TTA Solutions.

The cause of the irreproductibilty encountered in earlier experiments has been traced to the sticking of the lanthanum chelate to the walls of the pipets used for analysis. In delivering 100 microliter samples of the benzene phase, up to 80 percent of the lanthanum tracer was lost, even when the pipet was washed several times with benzene. The adsorbed material is removed by an acid wash.

The above trouble has been eliminated by the addition of lanthanum carrier to the solutions. Preliminary experiments indicate the expected third power dependence of the extraction coefficient on the TTA concentration.

### Chemistry of Zirconium.

The polymerization of zirconium in acidic solution has been studies using a two phase extraction system. The zirconium at equilibrium is partially extracted into a benzene-TTA solution. By studying the variation of the extraction coefficient with zirconium concentration the polymerization process may be followed.

Two series of experiments were run--one at 2 M $HClO_4$ and the other at 1 M $HClO_4$ with 1 M $LiClO_4$ added to maintain constant ionic strength. At 2 M $HClO_4$, polymerization starts at about $10^{-3}$M zirconium while in 1 M $HClO_4$ the polymerization begins at about $10^{-4}$M zirconium. Presumably the polymer consists of zirconium ions and oxide or hydroxide ions although there may also be perchlorate ions present.

From the data it can be shown that a dimer exists and that polymers containing many zirconium atoms are formed. In all probability polymers exist with all numbers of zirconium atoms, starting with the dimer and running up to large

colloidal particles. The data do not allow a unique identification of the higher polymers since their stability is such that there are always many of them present in the same solution.

The dimer appears to have between three and four hydroxide groups attached. The higher polymers contain approximately four hydroxide groups per zirconium ion.

A comparison of the extraction coefficient of the monomer for the series at 1 M $HClO_4$ with that for the series at 2 M $HClO_4$ indicates that the monomer is nearly a +4 ion in these solutions. This result is believed to be correct compared with an earlier result using trace concentrations of zirconium which showed the zirconium to be $ZrOH^{+3}$. The earlier result was probably in error because of complexing impurities.

Uranyl Species in Perchloric Acid Solution and the Extraction of Uranyl Ion Into Benzene-TTA Mixtures.

The work on this system has now been completed and a report will be issued soon. The uranyl ion has been shown to have a +2 charge in perchloric acid solutions ranging from ca 2M to ca 0.1 M. Discrepancies in earlier work were found to be erroneous.

The spectrum of the complex ion formed by a uranyl ion combining with one TTA ion in water has been identified and the complexing may be estimated roughly.

In the benzene phase the uranium is present as the uranyl chelate, $UO_2K_2$, at low TTA concentrations, but at higher TTA a new species $UO_2K_2.HK$ is formed. There is some evidence that one or both of these species may contain water of hydration when the benzene phase is equilibrated with an aqueous phase.

Chemistry of Ruthenium.

Molar extinction coefficients were measured for $RuO_4$ in 0.1 M $HClO_4$ and 0.1 M NaOH. Molarity of $RuO_4$ was obtained by $S_2O_3^{=}$ titration of $I_3^-$ formed by reaction of $RuO_4$ with $I^-$.

Absorption spectra were measured for various forms of ruthenium most of which were not identified more than tentatively. $RuO_4$ was reduced by several methods including standing in NaOH and $HClO_4$ solutions, reduction by $S_2O_3^{=}$ in $HClO_4$, $H_2O_2$ in $HClO_4$ and NaOH, $H_2$ in $HClO_4$, Zn-$H_2$ in $HClO_4$ and NaOH. In most cases of reduction listed above, color changes indicated intermediate products different from final products. Where possible successive spectra were run following changes from one form to another. Some of these systems are now being studied in detail.

Measurements have been made to try and determine the equilibrium constant for the hypothesized reaction

$$RuO_4 + OH^- = RuO_4OH^-.$$

Considerable difficulty was experienced because of reduction by $H_2O$ of $RuO_4OH^-$ to $RuO_4^{=}$.

Studies have been made attempting to determine the mechanism and rate of the reduction of +8 ruthenium to $RuO_4^=$ in alkaline solution. The present evidence indicates the reaction is heterogeneous and irreproducible.

## C. Engineering Development of Plutonium Separation

T. Vermeulen, M. Davis, T. Hicks, Barney Rubin

### Solvent Extraction Utilizing Chelate Process.

Preliminary rate and extraction studies on plutonium have been completed and are reported in UCRL 126.

Construction of a five-stage counter-current horizontal extractor with accessory equipment has been completed, and upon test has shown satisfactory flow characteristics. A second extractor for series operation with the first unit is almost completed.

Two preliminary runs with plutonium, simulating extraction from dissolver solution into TTA, indicate 95% recovery and better, with decontamination too high to determine accurately in the present unshielded equipment.

### Pilot Scale Synthesis of TTA.

One hundred ten pounds of purified TTA have been prepared in runs in the 10 gallon glass lined reactor, and bath production is continuing in order to satisfy the needs of other project centers. The procedure in use has been reported in UCRL 152.

Physical-chemical study of the various steps in TTA production for the purpose of designing a large scale continuous flow synthesis is nearing completion.

LMB/Information Division
10-18-48

DECLASSIFIED

SECRET