UCRL-17385 Rev.
c.3 (c.2 mss)

University of California

Ernest O. Lawrence Radiation Laboratory

BARYON RESONANCES IN SU(3)

TWO-WEEK LOAN COPY

This is a Library Circulating Copy which may be borrowed for two weeks. For a personal retention copy, call Tech. Info. Division, Ext. 5545

Berkeley, California

UCRL-17385 (Rev.) c.2

DISCLAIMER

This document was prepared as an account of work sponsored by the United States Government. While this document is believed to contain correct information, neither the United States Government nor any agency thereof, nor the Regents of the University of California, nor any of their employees, makes any warranty, express or implied, or assumes any legal responsibility for the accuracy, completeness, or usefulness of any information, apparatus, product, or process disclosed, or represents that its use would not infringe privately owned rights. Reference herein to any specific commercial product, process, or service by its trade name, trademark, manufacturer, or otherwise, does not necessarily constitute or imply its endorsement, recommendation, or favoring by the United States Government or any agency thereof, or the Regents of the University of California. The views and opinions of authors expressed herein do not necessarily state or reflect those of the United States Government or any agency thereof or the Regents of the University of California.

Submitted to Phys. Rev. Letters

UCRL-17385 Rev.
Preprint

UNIVERSITY OF CALIFORNIA

Lawrence Radiation Laboratory
Berkeley, California

AEC Contract No. W-7405-eng-48

BARYON RESONANCES IN SU(3)

R. D. Tripp, D. W. G. Leith, A. Minten, R. Armenteros,
M. Ferro-Luzzi, R. Levi-Setti, H. Filthuth, V. Hepp,
E. Kluge, H. Schneider, R. Barloutaud, P. Granet,
J. Meyer, and J. P. Porte

March 28, 1967

BARYON RESONANCES IN SU(3)*

R. D. Tripp

Lawrence Radiation Laboratory
University of California
Berkeley, California

D. W. G. Leith and A. Minten

Stanford Linear Accelerator Center
Stanford University
Stanford, California

R. Armenteros, M. Ferro-Luzzi, and R. Levi-Setti

CERN
Geneva, Switzerland

H. Filthuth, V. Hepp, E. Kluge, and H. Schneider

Institut für Hochenergiephysik
Heidelberg, Germany

R. Barloutaud, P. Granet, J. Meyer, and J. P. Porte

CEN, Saclay, France

March 28, 1967

ABSTRACT

An attempt is made to place most of the known baryon resonances into SU(3) multiplets after which a comprehensive comparison of decay rates is made in graphical form.

I. INTRODUCTION

During the past year there has been a considerable increase in our knowledge concerning Y^* resonances. Combined with the detailed information available on N^*'s and the fragmentary data on Ξ^*'s, we are now in a position to make more significant tests of the systematics of SU(3). This we do first by arranging most of the known resonances into multiplets by means of mass formulae, and then testing the consistency of these assignments by a comparison of various decay rates within each multiplet.

Recent advances[1] in Y^* resonances are:

1. Discovery of a Y_0^* with a mass of about 1700 MeV,[2] and identification of its spin-parity.[3]

2. Suggestion of a Y_0^* at about 1830 MeV with $J^P = 5/2^-$.[3]

3. Evidence[4] for $Y_1^*(1915)$ with an indication of $J^P = 5/2^+$.[5]

4. Evidence on the branching fraction into $\Sigma\pi$ of many of the resonances lying in the mass range from 1650 to 1950 MeV.[3]

5. Evidence on the branching fraction into $\Lambda\pi$ of $I = 1$ resonances in the same mass region[5] and at higher energy.[6]

6. Elasticities of Y^* resonances as derived from total-cross-section studies[2,4] and bubble chamber studies of the elastic and charge-exchange channels.[1,6]

In Table I we list the masses, widths, and branching fractions of the various resonances to be discussed. Most of these are from the compilation of Rosenfeld et al.,[7] with additions and alterations arising from more recent information and further investigations as noted. We do not include in this discussion certain isolated resonances[8] for which

there are at present no likely SU(3) partners, nor do we treat decays into baryons and vector mesons nor into baryon resonances and pseudoscalar mesons. Evidence for these latter decay modes is currently too limited.

II. DECUPLETS, UNITARY SINGLETS, AND THEIR RECURRENCES

The $3/2^+$ decuplet consisting of $\Delta(1236)$, $\Sigma(1385)$, $\Xi(1530)$, and $\Omega(1674)$ is now known to satisfy moderately well the relative decay-rate relationships of SU(3) when suitably corrected for mass differences. The old discrepancy arising from the apparent absence of $\Sigma(1385) \to \Sigma\pi$ has been resolved by a better measurement in good agreement with SU(3).[9]

To compare the various partial widths we use the expression

$$\Gamma = C^2 g^2 B_\ell(p) \left(\frac{M_N}{M_R}\right)^2 p, \qquad (1)$$

where C is the appropriate SU(3) Clebsch-Gordan coefficient,[10] g^2 is related to the coupling constant, and $B_\ell(p)$ is the barrier-penetration factor for an angular momentum ℓ as given approximately for a non-relativistic square-well potential by Blatt and Weisskopf.[11]

We do not use the Glashow-Rosenfeld[12] prescription because numerical factors are left out of their expression when ℓ is greater than 1. M_R is the mass of the resonance,[13] and M_N, the mass of the nucleon, is introduced only to make g^2 dimensionless and of order unity; p is the c.m. momentum of the decay products.

Figure 1a shows g^2 calculated from Eq. (1) for the various decay modes of the $3/2^+$ decuplet and for those decay modes of the

presumed $7/2^+$ recurrence of the $3/2^+$ decuplet for which decay rates are known. The major discrepancy in the $3/2^+$ decuplet lies in the relative coupling constant of $\Xi(1530)$ compared to $\Delta(1236)$. This difference of a factor of two, if acceptable, can be looked upon as setting the scale for discrepancies in decay rates which might be tolerated among more questionable multiplets. The $7/2^+$ rates are seen to be in satisfactory agreement and to yield a g^2, using this centrifugal-barrier expression, of the same size as for the $3/2^+$ decuplet.

Figure 1b displays g^2 for all currently available decay rates of the two presumed unitary singlets $\Lambda(1520)$ of $J^P = 3/2^-$ and $\Lambda(2100)$ of $J^P = 7/2^-$. Within the rather larger experimental uncertainties, the agreement appears satisfactory, again yielding g^2 comparable with the $3/2^+$ and $7/2^+$ decuplets.

III. OCTETS

There have been a number of suggested baryon octets. The $3/2^-$ octet originally considered[12] now seems untenable. Proposals more in keeping with current data have often been mentioned in the literature. Recently Goldberg et al.[14] have discussed some decay rates of possible $3/2^-$ and $5/2^+$ octets and arrive at conclusions similar to ours. Figure 2 is a mass plot of four of the more respectable possibilities along with the Dalitz version[15] of how the quark model accounts for the three negative-parity octets and the two negative parity singlets $\Lambda(1405)$ and $\Lambda(1520)$ of $J^P = 1/2^-$ and $3/2^-$ respectively, all shown with solid lines. Dashed horizontal lines in the quark scheme indicate multiplet levels for which there is currently insufficient evidence. It is

interesting that the quark model can accomodate in a natural way only those unitary singlets that are actually observed.

The $1/2^-$ states consist of a nonet: $\Lambda(1405)$ and a presumed octet of eta-baryon resonances. Only for two of these four octet states has there been any convincing experimental evidence. For $\Sigma(1770)$ there have been some conflicting indications,[1] while a $J^P = 1/2^-$ Ξ predicted to be at 1820 MeV from the Gell-Mann-Okubo mass formula, assuming no mixing with $\Lambda(1405)$, has not been reported. This should lie considerably below $\Xi\eta$ threshold, which is indicated by a horizontal line.

The $3/2^-$ nonet states are $\Lambda(1520)$ and the octet now perhaps completed with the discovery of $\Lambda(1690)$ mentioned in Section I. (We shall use here a compromise of the masses found in the two experiments.[2,3]) The unmixed mass of the Λ member of the octet should lie at 1677 MeV, but a mixing angle of about 16 deg with the unitary singlet would displace it upward. For all members except $\Xi(1815)$ the spin-parity is firmly established; for $\Xi(1815)$ it is likely to be $3/2^-$.

With the appearance of a strong $5/2^-$ amplitude in $I = 0$ at 1827 MeV as noted in Section I, a possible $5/2^-$ octet can now be constructed. This is indicated in Fig. 2. The N(1688) and $\Sigma(1765)$ both have $J^P = 5/2^-$, while nothing is known yet concerning the spin-parity of $\Xi(1933)$, the existence of which is still doubtful. We include it here only because it falls at the correct mass to complete the octet.

Members of a $5/2^+$ octet occur at approximately the correct masses to correspond to recurrences of the $1/2^+$ baryon octet. The N(1688) and $\Lambda(1815)$ are known to have $J^P = 5/2^+$, while for $\Sigma(1910)$ there is only weak evidence for this J^P assignment.[5] The Ξ predicted to lie at 1990 MeV by the mass formula has not been observed.

At this point, agreement with SU(3) and, in particular, the quark model appears rather satisfactory. All states have not yet been seen, but there is no reason to suppose that even in the lower mass region our knowledge of the baryon resonances is complete. We shall now proceed to make as complete a comparison of decay rates between members of each octet as is possible with our present experimental knowledge. For each octet we shall find that there is at least one decay rate that is in serious disagreement with the assignments proposed in Fig. 2.

Since octets of baryon resonances can be formed which are symmetrical and antisymmetrical under the interchange of the meson and baryon, we must consider the octets of baryon resonances to be linear combinations of these two symmetries. If the symmetrical and antisymmetrical couplings are denoted by g_d and g_f, and the corresponding Clebsch-Gordan coefficients for each decay mode by C and C', then each partial width may be written as

$$\Gamma = (Cg_d + C'g_f)^2 B_\ell(p) \left(\frac{M_N}{M_R}\right)^2 p. \qquad (2)$$

The relationship between g_d and g_f in our notation and α (defined in Gell-Mann's convention as the ratio of the D coupling to the sum of the D and F couplings) is $\alpha^{-1} = 1 + \sqrt{5}\, g_f/3\, g_d$. For each measured decay rate we may then plot g_f vs g_d. These rates will yield straight lines with slopes given by the Clebsch-Gordan coefficients and displaced from the origin by amounts proportional to the square roots of the decay rates. The lines are inversion-symmetric through the origin corresponding to the square-root-sign ambiguity and we display the one which is most consistent with the other decay modes. Only a half-

plane need be plotted, since there is an overall sign ambiguity. Satisfactory agreement among members of an octet is indicated by a common value of g_d and g_f for all decay modes within that multiplet. We now proceed to investigate each octet in turn.

Four decay rates of N(1570) and $\Lambda(1670)$ of the $1/2^-$ octet are plotted in Fig. 3a. (The sign ambiguity is illustrated here for $\Lambda(1670) \rightarrow N\bar{K}$, where + or - affixed to each curve denotes the sign of the coupling.) In order to extract a decay rate from the known excitation cross sections for the reactions, it has been assumed that each resonance decays predominantly into the indicated two channels. A satisfactory cross-over of the four lines is found in the region of $g_d = 1.8$, $g_f = -1.1$. Considering the uncertainty in the experimental data and in the above assumption, the agreement is quite adequate. Very little is known about the possible $\Sigma(1770)$, so we do not show its decay modes.[16] However, a serious disagreement results if we proceed with the above values of g_d and g_f to predict the partial width of the only remaining open channel, namely $\Lambda(1670) \rightarrow \Sigma\pi$. This gives 250 MeV while the total width of the resonance is only 18 MeV. The disagreement here is well over an order of magnitude so it cannot easily be dismissed as a consequence of symmetry breaking.[17]

An effort is made in Fig. 3 to impart a feeling for the precision of the experimental partial width by the thickness of each line. Short dashed lines indicate the regions of the figure that are allowed by study of the relative signs of the resonant amplitudes in the reaction channels by Kernan and Smart[18] for the reaction $K^-n \rightarrow \Lambda\pi^-$ and by the CERN-Heidelberg-Saclay collaboration[3] for the reaction $K^-p \rightarrow \Sigma^{\pm}\pi^{\mp}$. (See figure caption.)

Figure 3b shows for the $3/2^-$ octet a fairly satisfactory intersection near $g_d = 0.4$, $g_f = 0.8$ for most of the decay rates. The observed rates of $\Lambda(1690) \rightarrow \Sigma\pi$ and $N\bar{K}$ are a factor of 3 too large and too small respectively. This disparity could be greatly diminished by introducing mixing with $\Lambda(1520)$ as indicated in the figure. Such mixing would not destroy the agreement of the isosinglet $\Lambda(1520)$ decay rates noted in Fig. 1b. However the major disagreement (at least a factor of 30) lies in the apparent complete absence of the $\Xi(1815) \rightarrow \Sigma\bar{K}$ decay mode. Within the framework of SU(3) this could have several explanations, none of which is particularly appealing:

1. $\Xi(1815)$ could be a member of a 27plet, in which case the decay rates should be in the ratio $\Lambda\bar{K}:\Sigma\bar{K}:\Xi\pi = 9:1:1$. Experimental uncertainties could be stretched to satisfy these ratios. However, no clear example of a 27plet has yet been seen.

2. $\Xi(1815)$ could have some other spin-parity.

3. Within the quark model, $\Xi(1815)$ could be a member of the other predicted but unseen $3/2^-$ octet. Since $\Xi \rightarrow \Sigma\bar{K}$ has the same Clebsch-Gordan coefficients as $N \rightarrow N\pi$, the absence of $\Xi(1815) \rightarrow \Sigma\bar{K}$ implies that the corresponding N has a very small partial width into the πN channel. Thus its nonappearance in detailed elastic-scattering experiments would have a natural explanation. Nevertheless, even among themselves, the three Ξ decay rates result in considerable inconsistency when Ξ is interpreted as a member of an octet.

Figure 3c shows the decay rates for the $5/2^-$ octet. Apart from $\Xi(1933)$ a reasonably satisfactory agreement can be had with $g_d = 1.05$ and $g_f = -0.2$ within the considerable uncertainty of some of the decay rates. The present poorly known rate for $\Xi \rightarrow \Lambda\bar{K}$ is nearly an order

of magnitude too high, while there is no evidence for the $\Sigma\bar{K}$ decay mode (not shown), which should be strong. Since its spin-parity has not been determined, there are many possibilities for $\Xi(1933)$, but if the $\Sigma\bar{K}/\Lambda\bar{K}$ branching ratio is small it would militate against its being a member of this $5/2^-$ octet.

The known decay rates for the $5/2^+$ octet are collected in Fig. 3d. Apart from $\Sigma(1910) \rightarrow \Sigma\pi$, there seems to be good agreement with $g_d = 0.7$ and $g_f = 1.15$. The upper limit on the decay rate for $\Sigma(1910) \rightarrow \Sigma\pi$ is nearly 100 times smaller than expected, so again the proposed octet is untenable in this form. It is interesting to note that, with the above values of g_d and g_f, the elasticity of $\Sigma(1910)$ would be very low, so that it could well have gone undetected so far in scattering experiments. What is observed at 1910 MeV may be in another multiplet not necessarily of this J^P, since the spin-parity assignment for this resonance is not firmly established.[5] If so and if Σ of $J^P = 5/2^+$ is coupled strongly to K^*, then it may show up only in production experiments at higher energy where K^* exchange often seems to play an important role.

It is important to note that despite an additional free parameter, the octet decay rates provide severer tests of SU(3) than do the decay rates of decuplets and singlets. This is because the SU(3) coefficients never differ by more than a factor of three for decuplets and are unity for singlets. Kinematical corrections arising from mass differences are generally of this magnitude, as are the observed departures from SU(3). On the other hand, interference between the symmetrical and antisymmetrical octet states lead to rates that may differ by orders of magnitude, often resulting in the large discrepancies noted above.

In conclusion, the experimental knowledge of baryon resonances acquired during the past several years has fitted moderately well within the framework of SU(3). Despite the flexibility of the theory, the multiplet structure and the general agreement found among decay rates can no longer reasonably be regarded as fortuitous. However, there still remain a number of mysterious discrepancies far outside the range considered legitimate for departure from SU(3).

We are grateful to many colleagues for access to their preliminary and unpublished data, and we thank Dr. H. Harari, Dr. A. H. Rosenfeld, and Dr. G. Segrè for helpful discussions.

REFERENCES

*Work done in part under the auspices of the U. S. Atomic Energy Commission.

1. M. Ferro-Luzzi, rapporteur's talk, in Proceedings of the XIII International Conference on High Energy Physics, Berkeley, September 1966.

2. J. D. Davies et al., Phys. Rev. Letters 18, 62 (1967).

3. R. Armenteros et al., Phys. Letters 24B, 198 (1967).

4. R. L. Cool et al., Phys. Rev. Letters 16, 1228 (1966).

5. W. Smart, A. Kernan, G. E. Kalmus, and R. P. Ely, Jr., Phys. Rev. Letters 17, 556 (1966).

6. C. G. Wohl, F. T. Solmitz, and M. L. Stevenson, Phys. Rev. Letters 17, 107 (1966).

7. A. H. Rosenfeld et al., Rev. Mod. Phys. 39, 1 (1967).

8. These include N(1400), $J^P = 1/2^+$; N(1700), $J^P = 1/2^-$, and $\Delta(1670)$, $J^P = 1/2^-$ as reported by Bareyre et al., Phys. Letters 8, 137 (1964).

9. R. Armenteros et al., Phys. Letters 19, 75 (1965).

10. J. J. de Swart, Rev. Mod. Phys. 35, 916 (1963).

11. J. M. Blatt and V. F. Weisskopf, Theoretical Nuclear Physics (John Wiley and Sons, Inc., New York, 1952), p. 361. A radius of interaction of 1 fermi has been adopted; nearly all results are quite insensitive to this choice.

12. S. Glashow and A. H. Rosenfeld, Phys. Rev. Letters 10, 192 (1963).

13. Following R. P. Feynman, Theory of Fundamental Processes (W. A. Benjamin, Inc., New York, 1962), p. 70 ff., we introduce

two powers of the resonant energy into the denominator in order that both sides of Eq. (1) transform as the inverse of the fourth component of a 4- vector. We thank Dr. A. H. Rosenfeld for pointing this out.

14. M. Goldberg, J. Leitner, R. Musto, and L. O'Raifeartaigh, Nuovo Cimento 49A, 169 (1966).

15. R. H. Dalitz, Les Houches Lectures, 1965 (Gordon and Breach, New York, 1965).

16. If one calculates the $\Sigma\eta$ and $N\bar{K}$ decay rates from the crudely known excitation cross section[1] assuming that it is a two-channel process dominated by $\Sigma\eta$, then it is found that the $\Sigma\eta$ decay mode fits well with the previous four, while the partial width into $N\bar{K}$ is very much smaller than would be expected.

17. An alternative possibility is that $\Lambda(1670)$ is a unitary singlet. This is in less violent discord with experiment but yields $g^2 \approx 0.2$, which is rather low compared to other multiplets.

18. A. Kernan and W. M. Smart, Phys. Rev. Letters 17, 832 (1966).

Table I. Branching fractions and partial widths.

Mass and width	Mode	Branching fraction	Partial Γ
$J^P = 1/2^-$			
N(1570)	Nπ	0.3	39
Γ = 130	Nη	0.7	91
Λ(1670)[a]	NK̄	0.06	1.1
Γ = 18	Λη	0.94	16.9
$J^P = 3/2^+$			
Δ(1236)	Nπ	1.0	120
Σ(1385)[b]	Λπ	0.86	30.1
Γ = 35	Σπ	0.14	4.9
Ξ(1530)	Ξπ	1.0	7.3
$J^P = 3/2^-$			
N(1530)[i]	Nπ	0.65	68
Γ = 105	Nη		0.4
Σ(1660)[c]	Λπ	0.10	5.0
Γ = 50	Σπ	0.67	33.5
	NK̄	0.10	5.0
Λ(1690)[d]	Σπ	0.46	18.4
Γ = 40	NK̄	0.245	9.8
	Λη	<0.027	< 1.1
Ξ(1815)[e]	Ξπ	0.10	1.6
Γ = 16	ΛK̄	0.65	10.4
	ΣK̄	<0.02	< 0.3
Λ(1520)[j]	Σπ	0.51	8.2
Γ = 16	NK̄	0.39	6.2
$J^P = 5/2^+$			
N(1688)[f]	Nπ	0.65	71.5
Γ = 110	ΛK	< 0.0013	< 0.15
	Nη	< 0.015	< 1.7
Λ(1820)[g]	Σπ	0.12	10.2
Γ = 85	NK̄	0.60	51
	Λη	< 0.014	< 1.15
Σ(1910)[g]	Λπ	0.10	6
Γ = 60	Σπ	< 0.01	< 0.6
	NK̄	0.08	4.8
$J^P = 5/2^-$			
N(1688)[f]	Nπ	0.40	56
Γ = 140	ΛK	< 0.016	< 2.3
	Nη	< 0.025	< 3.5
Σ(1765)	Λπ	0.17	15.3
Γ = 90	Σπ	0.01	0.9
	NK̄	0.50	45
	Ση	< 0.005	< 0.5
Λ(1827)[g]	Σπ	0.23	17.2
Γ = 75	NK̄	0.10	7.5
	Λη	< 0.08	< 6.1
Ξ(1933)	Ξπ	0.5	70
Γ = 140	ΛK̄	0.5	70
$J^P = 7/2^+$			
Δ(1920)	Nπ	0.5	100
Σ(2035)[h]	Λπ	0.25	40
Γ = 160	Σπ	0.06	9.6
	NK̄	0.16	25.6
	ΞK	< 0.016	< 2.6
$J^P = 7/2^-$			
Λ(2100)[h]	Σπ	0.05	8.0
Γ = 160	NK̄	0.29	46.4
	ΞK	0.01	1.6
	Λη	< 0.03	< 4.8

Footnotes to Table I.

a. Branching fractions obtained on the two-channel assumption.

b. Width and branching fractions from reference 9.

c. We adopt a slightly higher elasticity than that reported in reference 2. Even so, there is insufficient $\Sigma(1660)$ formed to accomodate the large $\Sigma\pi$ amplitude required by the analysis of reference 3, and in addition a comparably large rate into $\Lambda(1405)\pi$.

d. Branching fractions for $\Sigma\pi$ and $N\bar{K}$ from references 2 and 3. The upper limit for $\Lambda\eta$ comes from the measured cross section of 0.08 mb at $\Gamma/2$ above resonance as reported by Berley et al., Phys. Rev. Letters 15, 641 (1966).

e. Upper limit on the $\Sigma\bar{K}$ mode is extracted from Table I of the paper of G. A. Smith et al., Phys. Rev. Letters 14, 25 (1964) by comparison of the $\Sigma\bar{K}K$ and $\Lambda\bar{K}K$ reactions.

f. The upper limits on the decay mode $N(1688) \rightarrow \Lambda K$ were extracted from the unpublished associated production data of J. Anderson, F. Crawford, and J. Doyle (private communication). These limits come from the absence of both A_4 and A_5 coefficients in the angular distributions of $\pi^- p \rightarrow \Lambda K^0$ in this momentum region. A_5 is the most sensitive measure, and under the assumption that the two degenerate resonances of $J^P = 5/2$ decay into ΛK in proportion to their probabilities of formation and to their respective centrifugal barriers, we obtain the limits listed. This ignores SU(3) as a starting value. Figure 3cd shows that another iteration keeping A_5 fixed would satisfy SU(3). The upper limit on $N \rightarrow N\eta$ comes from assigning a maximum enhancement of 0.3 mb to the reaction $\pi^- p \rightarrow N\eta$ at 1688 MeV as derived from the work of W. B. Richards et al., Phys. Rev. Letters 16, 1221 (1966).

g. The $\Sigma\pi$ and $N\bar{K}$ rates are from references 1, 2, and 3. The upper limits on the $\Lambda\eta$ rates for $\Lambda(1820)$ and $\Lambda(1827)$ are obtained from the measured cross section of 0.2 mb.

h. Preliminary estimate of the $\Sigma\pi$ mode from A. Barbaro-Galtieri (private communication). The ΞK mode is estimated from the cross section for $K^-p \rightarrow \Xi K$ reported by J. Berge et al., Phys. Rev. 147, 945 (1966); the $\Lambda\eta$ upper limit is from S. Flatte and C. Wohl (private communication).

i. $N\eta$ partial width from the analysis of A. T. Davies and R. G. Moorhouse (Rutherford Laboratory Preprint).

j. A more recent compilation by G. B. Yodh (submitted to Phys. Rev. Letters) gives for $\Lambda(1520)$ a lower branching ratio $\Gamma(\Sigma\pi)/\Gamma(N\bar{K}) = 0.42/0.47$. This indicates a greater need for singlet-octet mixing than shown in Fig. 1.

FIGURE LEGENDS

Fig. 1. Display of the relative coupling constants for various decay modes of the $3/2^+$ decuplet and its recurrence and the $3/2^-$ unitary singlet and its recurrence. SU(3) coefficients and corrections for mass differences have been introduced so that within each multiplet all decay modes should have the same value of g^2.

Fig. 2. Mass plot for four proposed octets. The short horizontal line in the $1/2^-$ octet corresponds to the baryon-eta threshold mass. The diagram on the right shows the Dalitz version (reference 15) of how the quark-model can accomodate the negative parity multiplets.

Fig. 3. Plots of g_d vs g_f as given by Eq. (2) for the known decay rates of the presumed octets of $J^P = 1/2^-$, $3/2^-$, $5/2^-$, and $5/2^+$. Decay rates indicated by heavy lines are known to about 25%, medium lines are somewhat less well-known, while light lines may be uncertain to a factor of 2 or more. Error bars on the heavy and medium lines correspond respectively to 25% and 50% uncertainty in the decay rates. Long dashed lines denote upper limits. Short dashed lines indicate the regions of the figures allowed by measurements of the relative signs of reaction amplitudes by Kernan and Smart and by the CERN–Heidelberg–Saclay collaboration. The sign affixed to each decay-rate line denotes the sign of the coupling. Shaded areas in each figure indicate the approximate values of g_d and g_f that seem to agree best with experiment, although other regions of each plot may still be acceptable. Wavy lines in Figs. 1b and 3b exhibit the displacements from the pure singlet and pure octet decay rates into $\Sigma\pi$ and $N\bar{K}$ due to a mixing angle of -16 deg., the magnitude suggested by the mass formula.

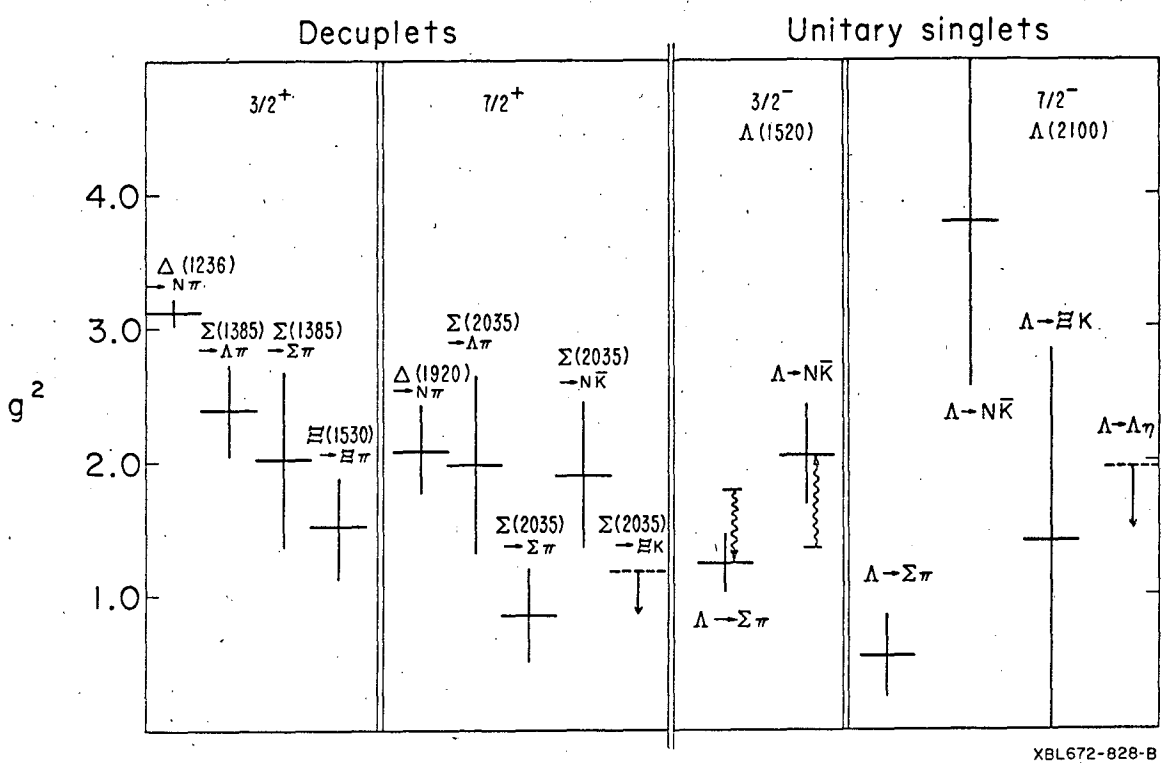
Decuplets
Unitary singlets
3/2+
7/2+
3/2−
Λ(1520)
7/2−
Λ(2100)
4.0
3.0
2.0
1.0
g2
Δ(1236) → Nπ
Σ(1385) → Λπ
Σ(1385) → Σπ
Ξ(1530) → Ξπ
Σ(2035) → Λπ
Δ(1920) → Nπ
Σ(2035) → NK̄
Σ(2035) → Σπ
Σ(2035) → ΞK
Λ→NK̄
Λ→Σπ
Λ→NK̄
Λ→Σπ
Λ→ΞK
Λ→Λη
XBL672-828-B

Fig. 1

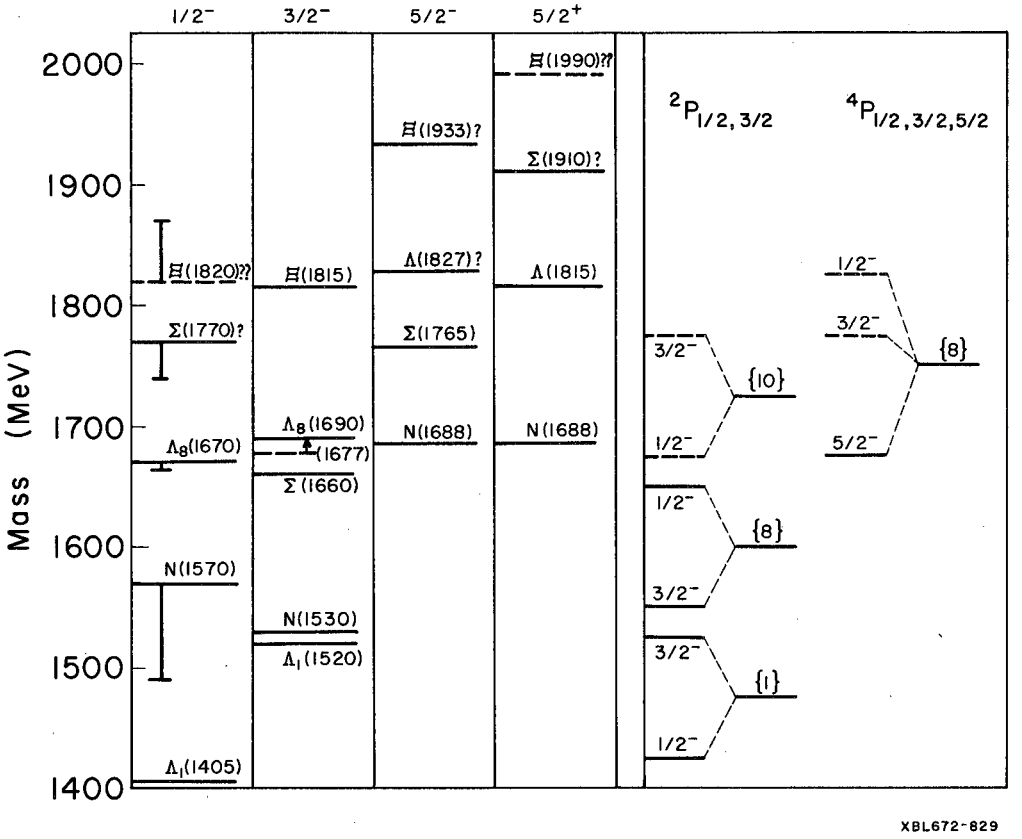
1/2⁻
3/2⁻
5/2⁻
5/2⁺
Mass (MeV)
2000
1900
1800
1700
1600
1500
1400
Ξ(1820)??
Σ(1770)?
Λ8(1670)
N(1570)
Λ1(1405)
Ξ(1815)
Λ8(1690)
(1677)
Σ(1660)
N(1530)
Λ1(1520)
Ξ(1933)?
Λ(1827)?
Σ(1765)
N(1688)
Ξ(1990)??
Σ(1910)?
Λ(1815)
N(1688)
2P1/2,3/2
4P1/2,3/2,5/2
3/2⁻
1/2⁻
{10}
1/2⁻
3/2⁻
{8}
3/2⁻
1/2⁻
{1}
1/2⁻
3/2⁻
5/2⁻
{8}
XBL672-829

Fig. 2

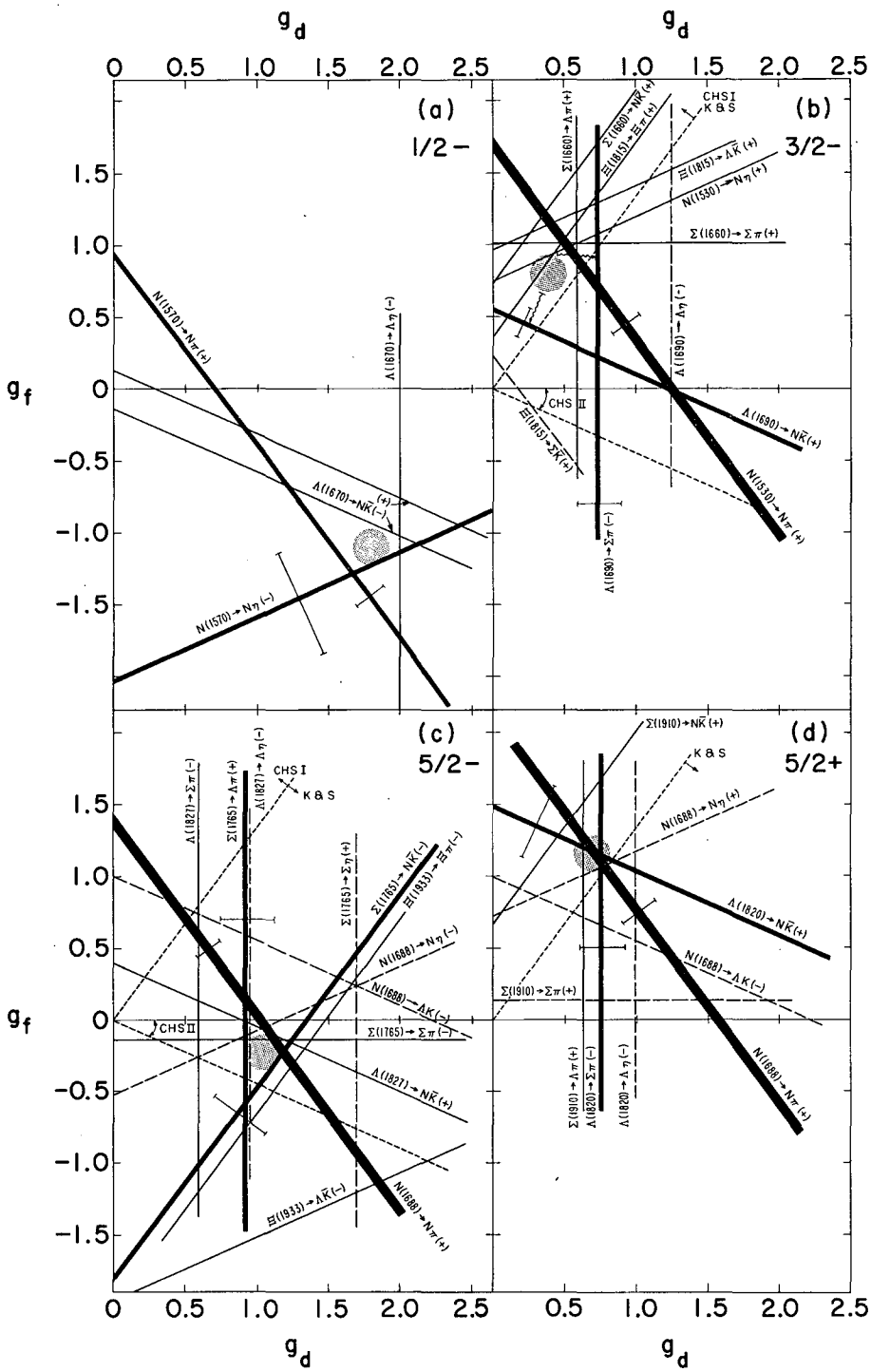
(a)
1/2−
(b)
3/2−
(c)
5/2−
(d)
5/2+
g_d
g_f
CHS I
CHS II
K&S
N(1570)→Nπ(+)
N(1570)→Nη(−)
Λ(1670)→Λη(−)
Λ(1670)→NK̄(+)(−)
Σ(1660)→Λπ(+)
Σ(1660)→NK̄(+)
Ξ(1815)→ΞK̄(+)
Ξ(1815)→ΛK̄(+)
N(1530)→Nη(+)
Σ(1660)→Σπ(+)
Λ(1690)→Λη(−)
Λ(1690)→NK̄(+)
N(1530)→Nπ(+)
Λ(1690)→Σπ(−)
Ξ(1815)→ΣK̄(+)
Λ(1827)→Σπ(−)
Σ(1765)→Λπ(+)
Λ(1827)→Λη(−)
Σ(1765)→Ση(+)
Σ(1765)→NK̄(−)
Ξ(1933)→Ξπ(−)
N(1688)→Nη(−)
N(1688)→ΛK(−)
Σ(1765)→Σπ(−)
Λ(1827)→NK̄(+)
Ξ(1933)→ΛK̄(−)
N(1688)→Nπ(+)
Σ(1910)→NK̄(+)
N(1688)→Nη(+)
Λ(1820)→NK̄(+)
N(1688)→ΛK(−)
Σ(1910)→Σπ(+)
N(1688)→Nπ(+)
Σ(1910)→Λπ(+)
Λ(1820)→Σπ(−)
Λ(1820)→Λη(−)
XBL674-2668A

This report was prepared as an account of Government sponsored work. Neither the United States, nor the Commission, nor any person acting on behalf of the Commission:

A. Makes any warranty or representation, expressed or implied, with respect to the accuracy, completeness, or usefulness of the information contained in this report, or that the use of any information, apparatus, method, or process disclosed in this report may not infringe privately owned rights; or

B. Assumes any liabilities with respect to the use of, or for damages resulting from the use of any information, apparatus, method, or process disclosed in this report.

As used in the above, "person acting on behalf of the Commission" includes any employee or contractor of the Commission, or employee of such contractor, to the extent that such employee or contractor of the Commission, or employee of such contractor prepares, disseminates, or provides access to, any information pursuant to his employment or contract with the Commission, or his employment with such contractor.