UCRL 1750
Cy. 2

UNIVERSITY OF CALIFORNIA

Radiation Laboratory

TWO-WEEK LOAN COPY

This is a Library Circulating Copy which may be borrowed for two weeks. For a personal retention copy, call Tech. Info. Division, Ext. 5545

BERKELEY, CALIFORNIA

DISCLAIMER

This document was prepared as an account of work sponsored by the United States Government. While this document is believed to contain correct information, neither the United States Government nor any agency thereof, nor the Regents of the University of California, nor any of their employees, makes any warranty, express or implied, or assumes any legal responsibility for the accuracy, completeness, or usefulness of any information, apparatus, product, or process disclosed, or represents that its use would not infringe privately owned rights. Reference herein to any specific commercial product, process, or service by its trade name, trademark, manufacturer, or otherwise, does not necessarily constitute or imply its endorsement, recommendation, or favoring by the United States Government or any agency thereof, or the Regents of the University of California. The views and opinions of authors expressed herein do not necessarily state or reflect those of the United States Government or any agency thereof or the Regents of the University of California.

UCRL-1750
Unclassified-Instrumentation Distribution

UNIVERSITY OF CALIFORNIA

Radiation Laboratory

Contract No. W-7405-eng-48

UNIVERSITY OF CALIFORNIA RADIATION LABORATORY
6.4 BEV BEVATRON RF SYSTEM

C. N. Winningstad, D. Paxson, O. Anderson
Q. Kerns and J. Riedel

April 15, 1952

Berkeley, California

		Page No.
Abstract		3
Preface.	C. N. Winningstad	4
Section I.	Primary Frequency Generator. C. N. Winningstad	5
Section II.	Twenty Point Curve Corrector. Donald Paxson	11
Section III.	Ripple Corrector and Bias Regulator. Oscar Anderson	13
Section IV.	The D.C. Current Transformer. Quentin Kerns	15
Section V.	Final RF Amplifier. Oscar Anderson	19
Section VI.	RF Aspects of the Drift Tube and Tangent Tank. C. N. Winningstad	22
Section VII.	Self-Tracking System for the Final RF Amplifier. Quentin Kerns	23
Section VIII.	Saturating Supply for Final RF Amplifier. Quentin Kerns	25
Section IX.	Monitoring and Controls. Jack Riedel	29
Section X.	Frequency Marker. Donald Paxson	31

UCRL-1750
Unclassified-Instrumentation
Distribution

UNIVERSITY OF CALIFORNIA RADIATION LABORATORY
6.4 BEV BEVATRON RF SYSTEM

Radiation Laboratory, Department of Physics
University of California, Berkeley, California

April 15, 1952

ABSTRACT

The University of California Radiation Laboratory bevatron rf system utilizes the magnet current as the major source of frequency determining information for the primary frequency generator. Especially designed Ferroxcube III saturable reactors are the basis of controlling the primary frequency generator's resonate frequency with the magnet current. The 450 mmfd. capacity of the accelerating anode, or drift tube, is automatically resonated with Ferroxcube III reactors also, in order that the final rf amplifier plate dissipation rating need be only the order of 10 kw to obtain the 22.3 kv rf level.

UCRL-1750
Unclassified-Instrumentation
Distribution

UNIVERSITY OF CALIFORNIA RADIATION LABORATORY
6.4 BEV BEVATRON RF SYSTEM

Radiation Laboratory, Department of Physics
University of California, Berkeley, California

April 15, 1952

PREFACE

C. N. Winningstad

The rf system for the University of California Radiation Laboratory 6 Bev bevatron is shown in block diagram in Fig. 1.

It is the purpose of this paper to present the details of this system in a manner which will allow a familiarization with the rf system problems and the solutions to date.

The overall purpose of the rf system is to supply an accelerating system for the protons injected into the bevatron "race track". The magnetic field of the bevatron is allowed to increase according to a rate determined by the characteristics of the bevatron magnet and associated current generating equipment. In order to keep the injected beam at the proper radius, the rf system will be required to change frequency in step with the magnetic field such as to accelerate the protons to the proper energy for the given bevatron radius and magnetic field.

The specifications imposed upon the rf system are given in brief form in "Bevatron Specifications", M62D revised 1-21-52.

I. PRIMARY FREQUENCY GENERATOR

C. N. Winningstad

The primary frequency generator for the University of California bevatron is a radio frequency oscillator which must generate frequencies from approximately 0.25 to 2.5 Mc according to the relationship $F = 2.495/\sqrt{1 + 4.089/H^2}$, where F is frequency in megacycles, and H is the magnetic field in kilogauss. The accuracy with which the oscillator must conform to the above equation for only 10 percent beam loss is approximately 0.1 percent in the region of injection, or 0.37 Mc, and approximately 1 percent at final energy, or 2.48 Mc.

The wide frequency range, plus the extreme accuracy required, suggest that the system should be substantially independent of devices subject to drift. Since the magnetic field H is a quite reasonably repeatable function of the magnet current I, it was proposed that the oscillator be controlled very nearly 100 percent by magnet current information in the region of high required accuracy, and be controlled to about 98 percent by magnet current information in the region of final energy.

To accomplish this, an oscillator system has been developed which utilizes an inductance which is varied by saturating the core material with shunted current from the main magnets.

The variable inductance is composed of two nearly identical "ferroxcube" toroids, approximately 0.975 inches o.d., 0.725 inches i.d., and 3/16 inches thick, wound independently in opposite directions and connected in series, for the rf winding. The two toroids are mounted

such that their thickness dimensions are colinear and approximately 3/16 inches apart. This combination is electrostatically shielded with a brass housing, which also serves as a confinement for the temperature controlled oil bath. The housing is constructed such that the hole through the two toroids is available for the saturating windings along with their appropriate insulation. With this arrangement, coupling between the saturating and rf windings is negligible.

Many items influence the stability and repeatability of the rf winding inductance as a function of saturating ampere turns. The effects which are not negligible for our purposes are hysteresis, temperature, history, and rf level.

Hysteresis is controlled by using two saturating windings. One, the "main" winding, is energized from the magnet current shunt: the second, the "bias" winding, is energized with reverse ampere turns from the bias regulator supply. Since the main winding starts with zero ampere turns, and the bias winding has a fixed number of reverse ampere turns, as the main winding builds up, the toroids will pass through a zero saturating flux point, provided the bias winding ampere turns were sufficient to overcome the previous cycles' residual magnetism. Thus each saturating cycle is given a fresh start through zero flux, and closely repsatable hysteresis cycles result.

If a change in the end points of the hysteresis cycle is made, the first few cycles with the new terminal points will not be identical. This is known as the history effect. For our purposes, after approximately five new cycles have been made, the history of previous cycles is sufficiently masked.

such that their thickness dimensions are colinear and approximately 3/16 inches apart. This combination is electrostatically shielded with a brass housing, which also serves as a confinement for the temperature controlled oil bath. The housing is constructed such that the hole through the two toroids is available for the saturating windings along with their appropriate insulation. With this arrangement, coupling between the saturating and rf windings is negligible.

Many items influence the stability and repeatability of the rf winding inductance as a function of saturating ampere turns. The effects which are not negligible for our purposes are hysteresis, temperature, history, and rf level.

Hysteresis is controlled by using two saturating windings. One, the "main" winding, is energized from the magnet current shunt: the second, the "bias" winding, is energized with reverse ampere turns from the bias regulator supply. Since the main winding starts with zero ampere turns, and the bias winding has a fixed number of reverse ampere turns, as the main winding builds up, the toroids will pass through a zero saturating flux point, provided the bias winding ampere turns were sufficient to overcome the previous cycles' residual magnetism. Thus each saturating cycle is given a fresh start through zero flux, and closely repeatable hysteresis cycles result.

If a change in the end points of the hysteresis cycle is made, the first few cycles with the new terminal points will not be identical. This is known as the history effect. For our purposes, after approximately five new cycles have been made, the history of previous cycles is sufficiently masked.

The ferroxcube material used has a temperature coefficient of initial permeability of approximately plus 0.0048 per unit parts per degree centigrade. Thus the temperature of the cores must be regulated to plus or minus 0.1 degrees centigrade.

The rf level influences the value of the inductance as a function of saturating ampere turns mainly in the region of few saturating ampere turns, with reasonable rf levels. For our purposes, as low a level as is practical is most favorable. Operation below 2 volts peak is satisfactory.

The ferroxcube material was chosen for its wide range of permeability; a range of 1000 to 10 for 0 to 400 ampere turns is realizable. The material is basically stable enough to assure the necessary repeatability. An important coincidence is that when a properly chosen capacitor and inductance are used, simply saturating the ferroxcube reactor will result in nearly the required value of frequency as a function of saturating current. Referring to Fig. 2, by choosing the proper value of bias ampere turns the correct frequency at injection may be obtained. By proper choice of the percent of current shunted from the magnet, the initial slope of the frequency - current function may be obtained. By proper choice of the shaper inductance, the final frequency may be determined. The required function of frequency versus current is shown on Drawing No. 4Y5055; note that there is a distinct change in slope. The initial straight section is reasonably easily duplicated with the bias and "slope", or shunt, controls. The final region of relatively small slope implies that the shaper reactor is a large inductance compared to the main reactor, when

the main reactor is well saturated. With a large enough shaper reactor, it was found that the ferroxcube material gave the closest approximation to the changing slope region, when the initial and final slopes were matched; and in particular, "ferroxcube III" was the most suitable of the various types of ferroxcube available.

Unfortunately the ferroxcube III samples furnished us have varied considerably. The original, and best material for the oscillator, was made in Holland by the Phillips Company, in the form of 2 in. x 1 in. x 1/2 in. bricks. Later samples were made in this country, and though not suited for the oscillator, they are used in the driver and final stages. They are in toroidal form, 2-1/2 in. o.d., 1-3/4 in. i.d. and 1 in. thick. One of the characteristics of the ferroxcube III which gives an index as to the suitability of the permeability characteristics is the Curie temperature. The Curie temperature for the old brick material is approximately 170° C, and for the new material, approximately 127° C. A high Curie temperature seems to be correlated with a long, straight saturation characteristic, which is desirable for our purposes.

Unfortunately even the brick material will not fit the changing slope portion of the curve satisfactorily. The saturation of the ferroxcube is not abrupt enough. In order to help the situation out, a capacitor was placed in parallel with the shaper reactor such that it parallel resonanted above 2.5 Mc with the shaper reactor, as shown in Fig. 3. This in effect made the shaper reactor appear to be an increasingly larger inductance as the oscillator resonant frequency increased. Thus the

the main reactor is well saturated. With a large enough shaper reactor, it was found that the ferroxcube material gave the closest approximation to the changing slope region, when the initial and final slopes were matched; and in particular, "ferroxcube III" was the most suitable of the various types of ferroxcube available.

Unfortunately the ferroxcube III samples furnished us have varied considerably. The original, and best material for the oscillator, was made in Holland by the Phillips Company, in the form of 2 in. x 1 in. x 1/2 in. bricks. Later samples were made in this country, and though not suited for the oscillator, they are used in the driver and final stages. They are in toroidal form, 2-1/2 in. o.d., 1-3/4 in. i.d. and 1 in. thick. One of the characteristics of the ferroxcube III which gives an index as to the suitability of the permeability characteristics is the Curie temperature. The Curie temperature for the old brick material is approximately 170° C, and for the new material, approximately 127° C. A high Curie temperature seems to be correlated with a long, straight saturation characteristic, which is desirable for our purposes.

Unfortunately even the brick material will not fit the changing slope portion of the curve satisfactorily. The saturation of the ferroxcube is not abrupt enough. In order to help the situation out, a capacitor was placed in parallel with the shaper reactor such that it parallel resonanted above 2.5 Mc with the shaper reactor, as shown in Fig. 3. This in effect made the shaper reactor appear to be an increasingly larger inductance as the oscillator resonant frequency increased. Thus the

required sharpness of slope change was more closely approached. In order to obtain the necessary accuracy, and also to allow for possible required changes due to differences between the final bevatron and the models of the bevatron, the shaper reactor will be further modified to allow it to be variable enough to produce a 2 percent effect on the frequency at maximum saturating ampere turns in the main reactor. The value of the shaper reactor, within its 2 percent range, will be determined by the 20 point corrector unit. Note that the effect of the shaper reactor decreases with decreasing frequency. Thus the frequency of the oscillator is determined, for a given set of components in Fig. 4, to better than 99.9 percent by the shunted magnet current through the main reactor saturating winding, in the region of injection. As the frequency increases, the shaper 20 point corrector saturating winding will have increasing effect, to a maximum effect of only 2 percent. Thus the magnet current will supply nearly 100 percent of the frequency determining information at injection, and the current never supplies less than 98 percent of the information.

In order that the vacuum tube circuitry associated with the frequency determining components have a small influence on the resonant frequency of the system as a whole, a cathode follower is used to minimize the system's input capacity, and variations therein. The output of the cathode follower feeds a distribution system, and also feeds back power through an isolation resistor. The use of a cathode follower somewhat restricts the amount of isolation resistance permissible; however, the advantage of a short time delay associated with the single cathode

follower stage is more important than the possible additional isolation obtainable if additional amplifiers were used to maintain loop gain with large isolation.

A diode limiter system is used to regulate a constant rf level at the tank circuit.

II. TWENTY POINT CURVE CORRECTOR

Donald Paxson

The bevatron 20-point curve corrector is used to supply a maximum of 2 percent of the frequency determining information to the bevatron primary frequency generator. The corrector accepts a voltage which is obtained from a d.c. current transformer in the shunted magnet current circuit. The amplitude of input signal is divided into 20 chosen voltage intervals. The output voltage for any of these 20 intervals has a rate of change which is a positive or negative fraction of the input rate of change, and whose value starts at the value which the preceding interval ended at. The first interval starts at zero volts. When displayed on an oscilloscope, the output of the corrector consists of a voltage wave made up of twenty straight, connected lines whose slopes are varied by the settings of the controls on the front panel. See Fig. 5 for example.

The output voltage signal at any point can be varied arbitrarily from -10 volts to + 10 volts without effecting the voltage wave at any other point; that is, the twenty controls are completly independent of each other in their action.

The 20 points can be arbitrarily spaced with respect to the incoming voltage wave, and the voltage at those points is a function of the incoming voltage wave only, and is independent of time. For example, if the incoming voltage varies from 0 to 400 volts in 1 second, the output voltage wave will be traced through in 1 second, and if the incoming wave varies from 0 to 400 volts in 0.5 milliseconds, the output voltage

wave also will occur in 0.5 milliseconds.

The output voltage from the corrector is converted into a current which is fed into the corrector reactor of the primary frequency generator.

The basic system used is to feed the incoming voltage wave into 20 biased diode tubes which pass a current into a 20 channel mixer. Each diode starts to operate when the incoming voltage equals the bias voltage on the diode, and the amount of current passed by each tube is controlled by the setting of the potentiometer between it and the mixer.

The output voltage is repeatable and stable to 50 millivolts.

III. RIPPLE CORRECTOR AND BIAS REGULATOR

Oscar Anderson

The bevatron magnet power supply will introduce perhaps a four percent current ripple at a fundamental frequency of about 720 cps into the magnet winding. The percentage ripple in the magnetic field will be several times less, and of a different phase. Since the main part of the frequency information is derived from the magnet current, it is necessary to cancel the ripple component of the current and substitute a ripple current which corresponds to what is actually in the magnetic field. It is desirable to do this without disturbing the inherently high stability for slow signals that the current-controlled ferroxcube oscillator system gives. Fig. 6 shows the basic system to be used.

The current transformer and the field integrator are adjusted to produce the same size slow signals, but of opposite polarity. When these are added, the result is essentially the integrated field ripple minus the current ripple. This combined signal could then be introduced into a winding on the oscillator cores in such a manner that the introduced "minus current ripple" would cancel the ripple due to the main one-turn winding, and the integrated field ripple would be the only net ripple seen by the oscillator cores. However, to do this directly would defeat the requirement of not interfering with the slow-signal stability. A filter is inserted to remove slow signals due to zero drifts or gain unbalance of the current transformer and the field integrator, since these drifts would be hard to hold under 1 percent, much less 0.1 percent.

A simple R-C filter will probably be satisfactory since the lowest ripple frequency, 720 cps, is much higher than the highest frequency present in appreciable amplitude in the small unbalance signal that the gain drifts will produce. In addition, the accuracy requirements on the phase and amplitude of the corrected ripple signal are not too stringent, since the ripple is fairly small to begin with.

A special winding on the ferroxcube cores could be used for the ripple corrector, but one is already required for the bias, and it is simplest to make this winding serve both purposes. The bias current regulator supply can be modulated with the filtered combined ripple signal and thus be made to serve a dual purpose. The diagram indicates how simple feedback can be used to make the bias supply accurately follow the required signal.

The bias supply is capable of accurately regulating an output current between the limits of 100 and 500 milliamps. The d.c. stability is better than 0.1 percent, including hum components.

IV. THE D.C. CURRENT TRANSFORMER

Quentin Kerns

It is desirable to be able to monitor the main magnet current in some fashion without making a direct connection to the magnet current lead because of insulation problems. The D.C. Current Transformer is designed to employ the magnetic field around an insulated current carrying conductor as a measure of the current, over a range of frequency from 0 to 200 kc/sec. or higher.

Use is made of the change in incremental permeability of ferroxcube III with a change in d.c. saturating flux density. Figure 7 shows the approximate shape of the incremental - permeability - vs. saturating flux curve.

It is seen that a ferroxcube core, magnetically biased to some point such as "A" in Fig. 8, will exhibit a nearly linear permeability change in magnitude as a function of a small added magnetic flux.

The D.C. Current Transformer utilizes three toroidal cores of ferroxcube III, seen in cross section in Fig. 9. Magnet current flows in a conductor on the axis of the three cores.

A biasing current flows in opposing directions in windings on the two end cores. In the absence of any magnet current in the center conductor threading the cores, the two end cores will be biased to the same point on the μ_{ac} curve, Fig. 8. Thus the bridge formed of the two ferroxcube cored inductances, and the two resistors to ground, will

balance and there will be no resultant error signal. In the presence of a magnet current of the polarity indicated by arrows, the ferroxcube core to the right will be saturated more and show a lower permeability; the core to the left will become less saturated and show an increased permeability. In this case, the bridge is unbalanced, and the phase of the error signal carries the information as to the direction of unbalance.

The amplified error signal is fed to a phase sensitive detector, and the resulting output voltage, filtered to remove carrier frequency components, is a measure of the degree and direction of unbalance.

Symmetrically arranged around the group of three cores, there is a 4500 turn toroidal winding. A current in it produces magnetic flux in the opposite direction to the flux surrounding the magnet current conductor. The cathode follower controlling the current to this winding can thus neutralize the flux around the magnet conductor by a current of 1/4500 magnet current in the 4500 turn winding, and restore the bridge to balance. By making the gain of the error signal amplifier high enough, the bridge will always stay essentially in balance, and the cathode follower output current is an accurate measure of the magnet current.

The presence of the third ferroxcube core allows the bridge to be out of balance, and hence different carrier voltages to appear around the left hand and right hand cores, without a net carrier voltage appearing in the 4500 turn winding. In fact a winding around the floating center core would be a source of error signal equally as good as the present choice except for requiring more leads.

Without the carrier system at all, the 4500 turn winding on the three cores is potentially an accurate current transformer for a certain range of frequencies. By amplifying the voltage across the coil and feeding it into the cathode follower gird in a direction to tend toward a zero coil voltage, the 4500 turn winding is made to look into a pair of terminals having a low impedance - perhaps 5 ohms or less. Furthermore all the coil current, a.c. and d.c., flows through R, since the voltage amplifier has a very high input impedance. The voltage drop across R, plus the small coil (voltage drop), is then proportional to the magnet current for all frequencies from zero up to the limit of the device as a straight a.c. current transformer.

The toroidal cores used have a cross section of 1/4 in. x 1/4 in., and an i.d. of ~ 2-1/4 in., are cut from the same original core of 1 in. x 1/2 in. x 2-1/4 in. i.d. Correct wire size for the 4500 turn winding is simply the largest that can be physically used. Space through the center hole must be left for an electrostatic shield, for insulation, and for the conductor itself, which will be necked down to 1/2 in. diameter to conserve space where it passes through the toroids.

To buck out 4500 amps in the magnet current lead, one amp is required in the 4500 turn winding, and the cathode follower chosen should be capable of this plus some reserve. A negative power supply bleeds current through the cathode follower even at zero output current, making it unnecessary to cut off cathode follower plate current completely.

Carrier voltages of the order of 0.2 volt/core turn and carrier frequencies 200 - 2000 kc are satisfactory.

A choice of bias current can be made which will prevent ambiguity of the error signal in case the circuit is temporarily out of range because of an overcurrent.

V. FINAL RF AMPLIFIER

Oscar Anderson

The final rf amplifier is required to put ~ 22,000 v peak on the drift tube, in the case where a single drift tube is used. The capacity of this, including the bushing, will be about 450 $\mu\mu f$. The KVA required at injection frequency of 375 kc is about 250 KVA, and at the top frequency of 2.50 Mc is about 1700 KVA. In a case like this, a great saving in power is obtained by tuning the capacity with an inductance. It is planned to use a system that was first tried on the 1/4 scale bevatron model and proved successful. Saturable inductors will be used with cores made of the ferromagnetic material, ferroxcube III, which has an unsaturated rf permeability of approximately 900 and a reasonably high "Q" over the required frequency range if properly used. The Q of this material at a given frequency is higher the more it is saturated with d.c. flux. Since the permeability of 900 can give a frequency range approaching $\sqrt{900} = 30$, and a range of only about 7 is required, it is planned to operate so as to use the "saturated end" of the 30:1 range and thus keep the Q as high as possible. This will keep the power required, and the number of cores necessary, to a minimum.

The largest size core that could conveniently be obtained in toroidal form are 2-1/2 in. o.d. x 1-3/4 in. i.d. x 1 in. thick. Under the above conditions it has been found that about 240 of this size cores are needed to handle the required KVA without overheating. The number required was estimated in the following way.

1. It was determined by experiment that the power in the cores would be highest at the injection frequency. It was decided to design the system to be able to run continuously at this frequency for test purposes.

2. Some five turn reactors were made up which would accept 10 cores each. These had "windings" made of heavy pieces of copper which would carry 1000 amperes of d.c. for saturating purposes, as well as the rf. The inductance of these when fully saturated was measured and the value of saturating current to get an inductance of $\left[\frac{2.5}{0.375}\right]^2$ times this was also measured.

Oil was forced through these reactors to cool the cores and it was found that they would run continuously at 2 kv peak at injection frequency, 375 kc, with the appropriate value of the saturating current. At 2.5 kv the interior of the cores exceeded the Curie temperature. The safe value of 2 kv corresponded to 40 volts per core per turn, which had been determined as a good maximum value previously, for other reasons.

3. The inductance of these five turn reactors was 1.25 μh when saturated. The drift tube capacity, 450 $\mu\mu$f, requires 9 μh to resonate at 2.5 Mc. Various models showed the stray inductance of the drift tube stem and the correction to the reactors would be something under 1-1/2 μh. Every effort was made to keep these as low as possible. See Drawing No. 327266 of the drift tube stem and reactor box No. 327266. Therefore, if they were to be used, a combination of six five turn reactors were needed. That would give 7-1/2 μh and put 2 kv or less

on each reactor, with a total of 22 kv. An arrangement using 2 parallel stacks each containing twelve, five turn reactors gives the right inductance and fills the minimum voltage requirements. This system requires 240 cores, as mentioned above. The greatest core dissipation, at injection frequency, will be approximately 75 watts per core, or 18 kw total for 240 cores.

Note that if it is desired to allow a margin of 2:1 on voltage, i.e. design for 44,000 volts peak, it could be done in two ways:

1. By the use of four parallel stacks of 24, five turn reactors each, which would take 4 x 240 = 960 cores and also four times the rf power and saturating power.

2. By the use of two drift tubes, say on opposite sides of the "race-track", each with the 240 core set-up, and drive them 180° out of phase. This cuts all the power requirements of the first method in half.

VI. RF ASPECTS OF THE DRIFT TUBE AND TANGENT TANK

C. N. Winningstad

The accelerating electrode, or drift tube, and the tangent tank to be used for the rf accelerating system, comprises the major capacity associated with the final rf amplifier tuned circuit. In addition to the capacitive effects of the drift tube, there will be inductances associated with the leads connecting the drift tube to the resonanting circuitry. The resistive component of the drift tube system is to be kept low by the use of a copper liner in the tangent tank and on the drift tube, and also the liner will extend a few feet beyond the tank. A 1/12 scale model was made, from which an approximate full scale equivalent circuit was calculated, shown in Fig. 10. The physical system is shown in Fig. 11.

At 0.25 Mc, the circuit appears to be approximately 444 $\mu\mu$f. At 2.5 mc, the circuit appears to be about 470 $\mu\mu$f. At 12 Mc, the system is resonant.

Tests conducted previously indicate that ion lock probably will not be a problem with the drift tube.

VII. SELF-TRACKING SYSTEM FOR THE FINAL RF AMPLIFIER

Quentin Kerns

The bevatron rf output system employs a saturable ferroxcube inductor which tunes to resonance with the accelerating electrode capacity over the required frequency range. The 1000 amp. d.c. supply delivers a saturating current proportional to an applied control voltage. It is the function of the frequency tracking system to derive a suitable control signal for the saturating current supply such that the output rf circuit will always be tuned to the instantaneous input frequency.

Fig. 12 is a block diagram of the tracking system. The phase difference between the grid and plate signals of the rf output stage is the criterion of tuning or mistuning of the anode resonant circuit. When in tune, the natural phase angle is very close to 180°. The phase angle must lie in the range of 180 ± 90° while the tube is delivering energy to the tank circuit. 90° is added to this angle by the constant 90° phase shifter. The phase meter then must have a range of 90° ± 90°. It conveniently works normally in the range near 90°. This is a simplification since if the two rf signals are clipped to constant amplitude square waves, the sum is proportional to the phase difference. In practice, the time of overlap of the waves is the measure of phase difference used.

Given the voltage proportional to phase difference plus a constant, the reactor can now be tuned automatically by feeding this signal (plus another appropriate constant to set the regulated phase angle 180° grid to anode) to the input of the 1000 amp. supply. The phase position

control adds a fixed voltage to the d.c. coupled circuit, allowing adjustment of the exact phase angle the regulating loop seeks to maintain.

The integral control takes advantage of the fact that the needed signal to the 1000 amp. supply increases with time. The gain in the direct proportional control channel can be reduced a factor of 50 with added integral control.

On the 1/4 scale model, the phase angle could be maintained easily to $\pm 5^{\circ}$ with a frequency change of 3 Mc/sec^2. Varying the anode voltage deliberately, as during the turn-on pulse, does not affect the tracking after the voltage is up a few percent of the way. Starting from zero voltage, the phase transient lasts the order of 100 μ seconds, depending on how far off the actual resonant frequency is at the instant of plate voltage application.

VIII. SATURATING SUPPLY FOR FINAL RF AMPLIFIER

Quentin Kerns

The 1000 ampere d.c. supply furnishes the saturating current to the ferroxcube saturable inductor in the rf output stage. In a time of about two seconds the current must vary from essentially zero to 1000 amps., the initial time rate of change of current being several times the average rate. In view of the desired overall response time of the electronic frequency tracking system (which includes the current supply as one element), it appeared desireable early in the game to make the time constant of the saturating current supply quite small. Experience with the 1/4 scale bevatron rf system confirmed this point.

Amplidyne generators were investigated as a possible solution, and doubtless a suitably fast machine could be constructed. As a result of experience with other regulated supplies however, the series - regulated, lossy element type of power supply was investigated and built. The present 1000 ampere supply within its dynamic voltage range has a time constant of the order of a few microseconds.

In principle, the operation of the supply follows the diagram of Fig. 13, a negative feedback system. Assume that the load current may be controlled between the necessary limits by the variable resistance. Then the amplified difference between the actual load current and the desired load current, in terms of an error voltage, adjusts the magnitude of the resistance so as to reduce the error. A high frequency signal

path provides a direct route for transient voltage changes, and overlaps the rectifier path in frequency band. Thus the load current is made to follow the input signal voltage from 0-300 kc. A practical circuit for achieving this result is shown in Fig. 14.

It is apparent that the full secondary voltage of the three phase step up transformer will appear across the open circuits CB, BA, and AC when the primary is energized, and there will be no input to the selenium rectifier. Further, it can be seen that when all A, B, and C points are connected together, there can be full input to the selenium rectifier, and hence maximum load current. By connecting A to A to A, and so on, the series tube on the mercury vapor rectifier output can reflect a varying impedance to the terminals CB, BA, and AC, and so vary the output from zero to maximum.

The series tube is chosen to be able to dissipate the order of one-fourth the maximum output power, since maximum loss in it occurs when the load voltage and current are ~ 1/2 maximum. A step-up transformer ratio is chosen to give an open circuit mercury vapor rectifier voltage equal to the series tube rating. The step-down transformer, of course, must deliver rated input to the selenium rectifier when the series tube is fully conducting - e.g., at zero bias on the series tube. Low impedance transformers are essential if the full capabilities of the circuit one to be realized. The RC circuits across the rectifier outputs are to damp the parasitic resonant circuits associated with transformer leakage reactance and shunt capacity, and form essentially a critically

damped circuit with the transformer leakage inductance. These RC circuits thus provide the necessary low-impedance path for the high-frequency components of voltage to be carried by the high-pass transformer.

If the rectifier connection schemes are identical - i.e., both delta or both wye, the current ratio between load and series tube equals the voltage ratio of the step down transformer. The voltage ratio of the high-pass transformer is set equal to this current ratio, and in this way saturation of the core with d.c. magnetic flux is avoided. This transformer determines the allowable band width of the error signal amplifier, since the amplifier gain must fall to a low value before the transformer phase angle becomes bad. In turn, the error signal amplifier band width determines the response of the entire supply, since its band width has then become the limiting factor. It is possible, of course, to cascade a still higher-pass transformer in the system to extend the range in frequency.

A suitable shunt is one that introduces no phase angle over the frequency spectrum involved, and provides sufficient output voltage for the error signal amplifier. If the shunt output is only a few volts, a fairly stable amplifier must be used to obtain stability of the output current. One attack on this problem is to use as a current monitoring device the "DC - transformer" arrangement designed for monitoring the main magnet current. An output of 1 volt/5A, or 200 volts for 1000 amps., would allow a simple error signal amplifier to be used.

The error signal amplifier is adjusted to have a large gain at

d.c. and low frequency, to provide stabilization against line voltage fluctuations and to reduce ripple in the output current. Ripple percentage is normally around 0.1 percent for a loop gain of 10 at ripple frequency.

IX. MONITORING AND CONTROLS

Jack Riedel

Perhaps the best way to describe the purpose and function of the various controls and monitoring devices associated with the radio frequency aspects of the bevatron is to list the sequence of operating events which will lead up to the establishment of the final energy beam.

Assume that the bevatron is loaded up with a circulating beam of protons of injector energy and that the primary frequency generator is running at the correct frequency. A pulse derived from the magnetic field (probably by a "Varian Associates" electron induction pulse unit) will turn the high voltage on the power stages of the rf system, and excite the drift tube. If the frequency is wrong the beam will strike a target at either the minimum radius limit or the maximum radius limit. The time delay between the turning on of the rf and this interception of the beam constitute the monitoring necessary to adjust the "bias" control of the oscillator. This time delay will be extended by adjusting the slope control, resetting the rf "on" time and the bias control as necessary. The intensity of the beam can now be optimized by adjusting the "rise shaper". Three knobs at the operators desk permit him to adjust the manner in which the rf voltage builds up with time. This is done by regulating the plate voltage on the power output stages.

The above process is continued until the frequency gets to approximately 1 Mc. From here on it is expected that further adjustments will be made with the 20 point shaper, again using the beam intercepting

target to monitor the results. Thus the beam itself is used to determine how to make the adjustments.

Now this whole system is predicated on the assumption that anything once optomized will remain that way, and a rather complex monitoring system has been set up to insure this. As the beam is pushed to higher and higher energies the pips from the frequency marker are lined up with pips from a current marker. Observations of these pips will tell if there is any jitter or instability in the frequency tracking. But it will also serve as a basis for knowing what is the cause of a possible diminution or loss of beam.

Pips from a second current marker unit which monitors only the current going through the "primary frequency generator" ferroxcube will also be lined up with the frequency marker pips. The purpose of this is to give a permanent record of what the frequency - current relationship should be. Then at any future time work can be done on the rf system independently of the bevatron beam and magnet, by replacing the current from the shunt with a suitable current supply. Also, after a shutdown during which various maintenance work has been done, it may be determined in advance that the rf system is properly adjusted.

X. FREQUENCY MARKER

Donald Paxson

The purpose of the bevatron frequency marker is to generate marker pulses which represent accurate measurements of the bevatron oscillator frequency. The pulses are spaced 50 kc apart and represent the instantaneous frequency with an accuracy of ± 0.05 percent. Ultimately, the frequency markers will be compared with markers derived from the magnetic field of the bevatron, thereby giving a direct measure of the relation of frequency versus magnetic field at any time.

Basically, the frequency marker measures the time interval of an rf cycle. In principle this is accomplished by converting the rf sine waves into sharp pulses which then are sent through a cable which has a delay time of 20 microseconds. The pulses going into the cable are compared with those coming out of the cable in a coincidence circuit. There will be a coincidence of incoming and outgoing pulses from the cable only when the recurrence rate (the frequency) is a multiple of the delay time of the cable. The delay time of the cable is 20 μs and this corresponds to a frequency of 50 kilocycles. Therefore, there is a coincidence of pulses every 50 kilocycles, namely 50 kc, 100 kc, 150 kc. etc. The physical length of the cable is approximately 500 ft. It has very high attenuation for sharp pulses and, in fact, has an attenuation of 40 even for sine waves at 2.5 Mc. For this reason, it was found to be impractical to send the pulses directly through the 500 ft. of length.

In practice, the cable is divided into five 100 ft. lengths, with an amplifier to sharpen and amplify the pulses placed between the adjacent lengths. See Fig. 15 for the block diagram.

The resolving power, and hence the accuracy of this device, depends on the sharpness of the pulses. For an accuracy of ± 0.05 percent the width of the pulses must be 0.007 microseconds when the incoming frequency is 400 kc. These pulses are derived from the sine waves by passing the sine waves through a series of Class C amplifiers. These amplifiers are biased far beyond cutoff so that the amplifier sees only the very top of the sine waves (or pulses). Since this device uses a 20 microsecond delay, it takes, in effect, 20 microseconds to measure the frequency. Therefore, the frequency to be measured cannot change at a rate which is greater than 0.1 percent of the instantaneous frequency in 20 μs. For example, if the instantaneous frequency is 400 kilocycles, and it is desired to mark this frequency with an accuracy of ± 0.05 percent (± 200 cycles or 400 cycles altogether), then as an ultimate limit, the 400 kilocycles cannot change more than 400 cycles in 20 microseconds. This corresponds to an ultimate rate of change of $\frac{400 \text{ cycles/sec}}{20\ \mu s} = 20$ megacycles/sec^2.

Information Division
4-17-52 gg

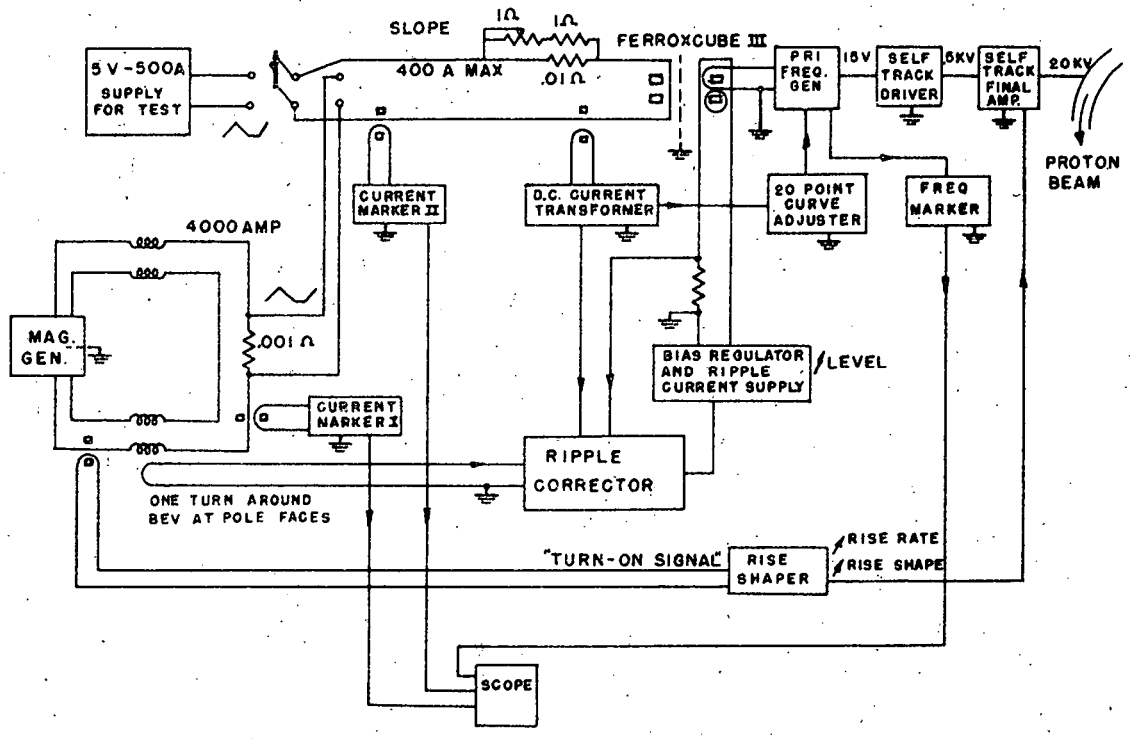

FIG. 1

MU3577

Block Diagram RF System

FIG. 2

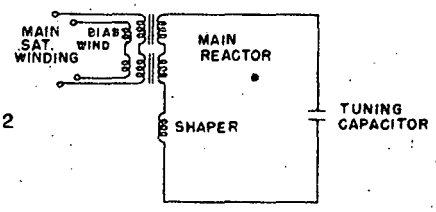

FIG. 3

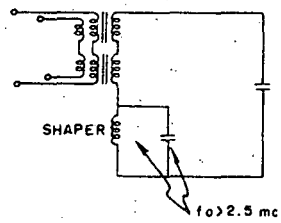

FIG. 4

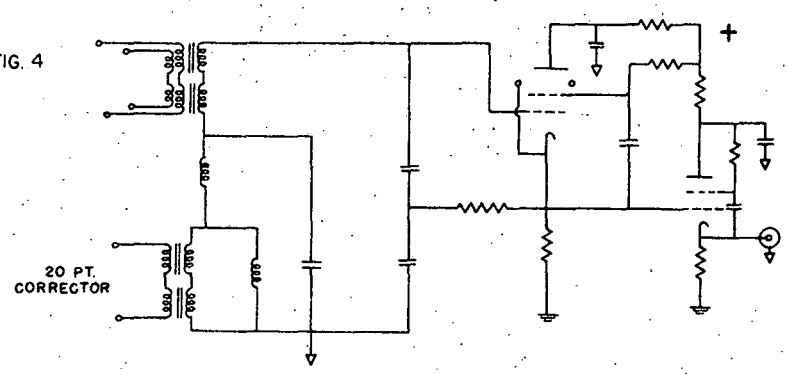

MU3578

Fig. 2 - Basic Primary Frequency Generator Resonant Circuit

Fig. 3 - Modified Primary Frequency Generator Resonant Circuit

Fig. 4 - Final Primary Frequency Generator Resonant Circuit

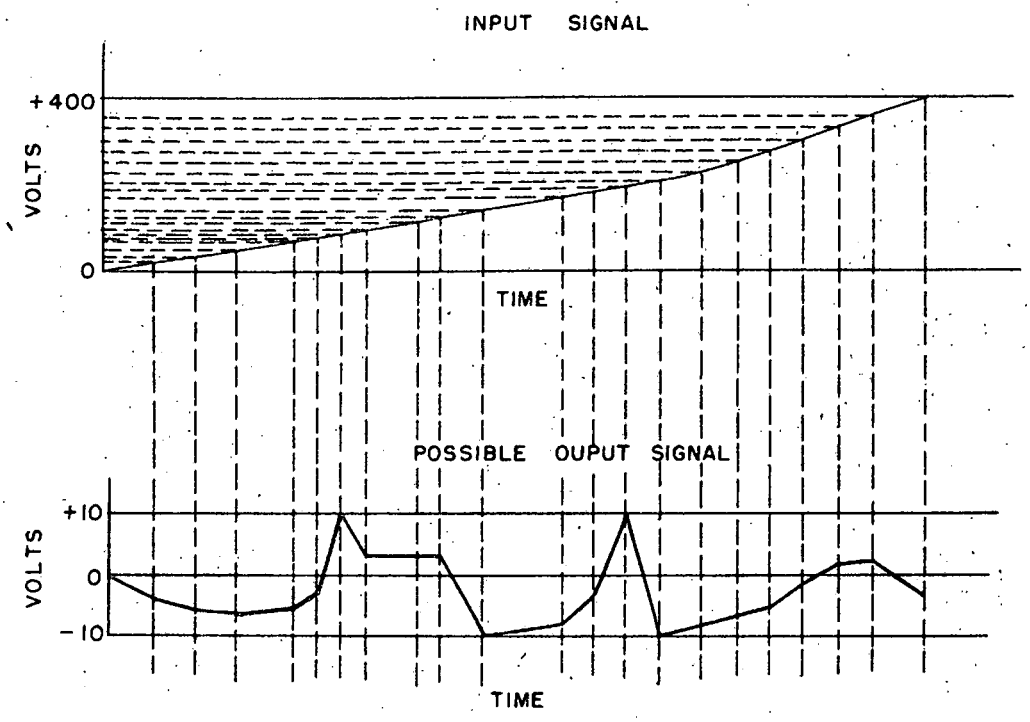

FIG.5

MU3579

Typical 20 Point Corrector Input and Output Signals

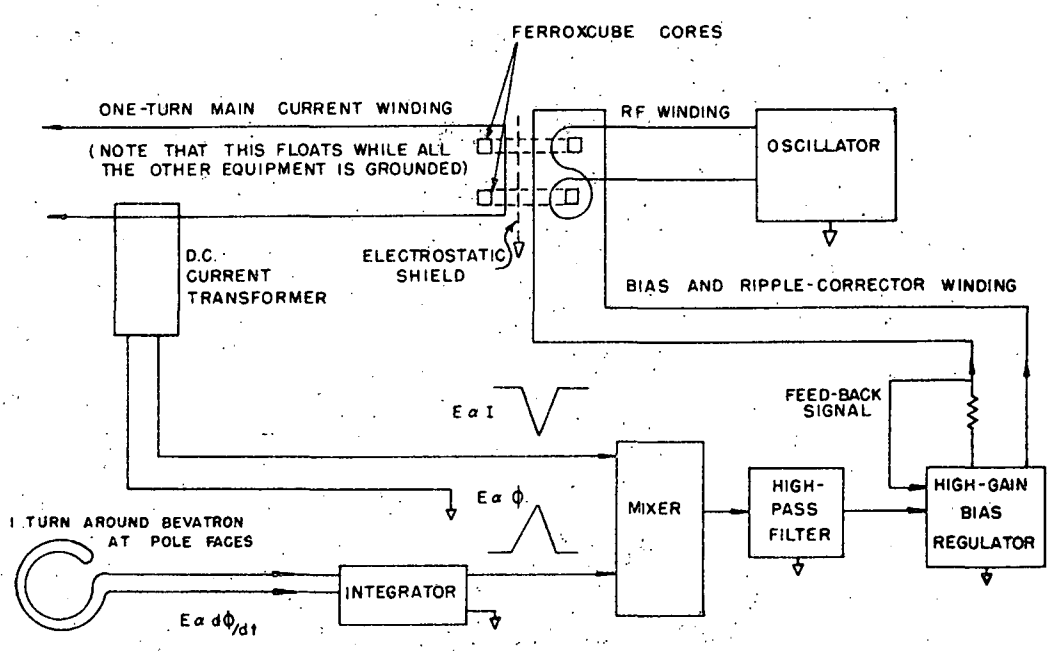

FIG. 6

MU3580

Block Diagram of Ripple Corrector

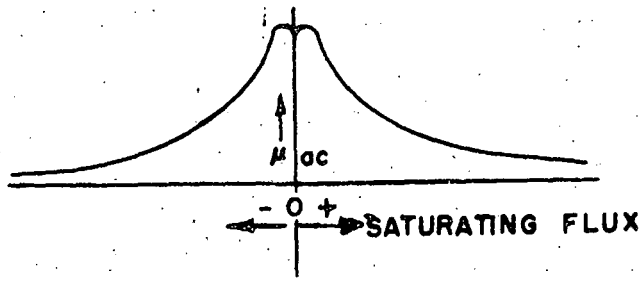

FIG. 7

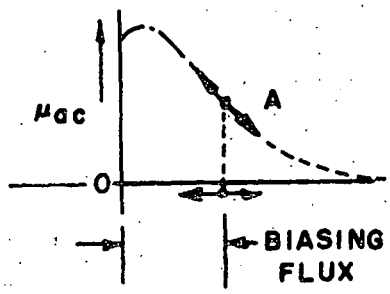

FIG. 8

MU 3581

Fig. 7 - Ferroxcube III Saturating Curve of Incremental Permeability

Fig. 8 - D.C. Current Transformer Magnetic Operating Point

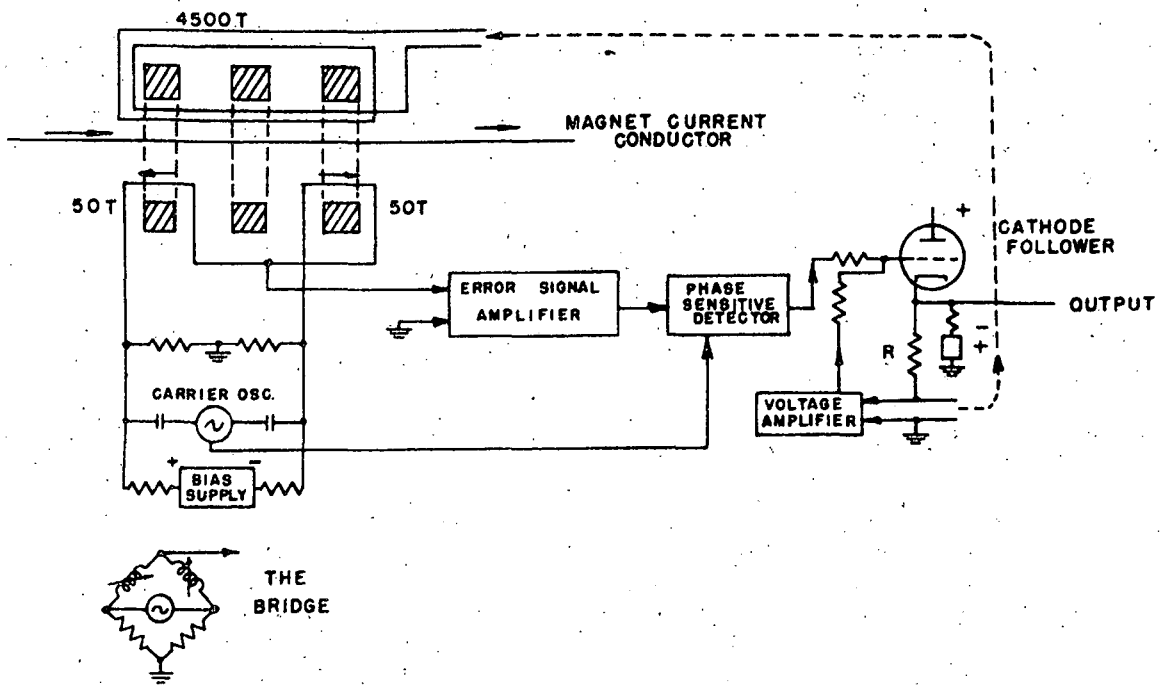

FIG. 9

MU3582

D.C. Current Transformer Block Diagram

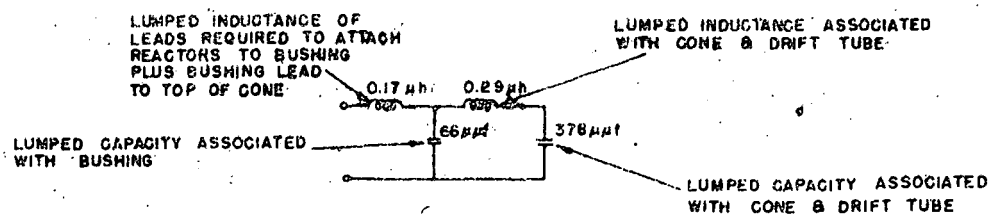

FIG. 10

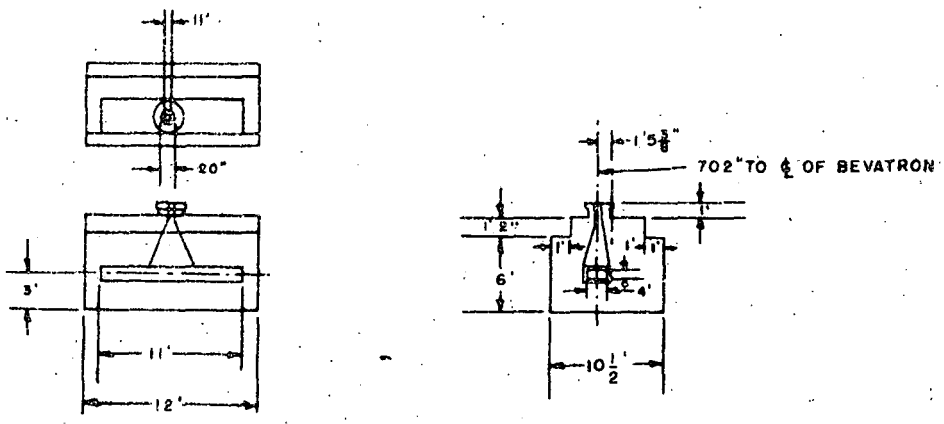

NORTH SIDE ELEVATION

WEST END ELEVATION

FIG. 11

MU 3583

Fig. 10 - Equivalent Circuit of Drift Tube and Tangent Tank

Fig. 11 - Physical System of Drift Tube and Tangent Tank

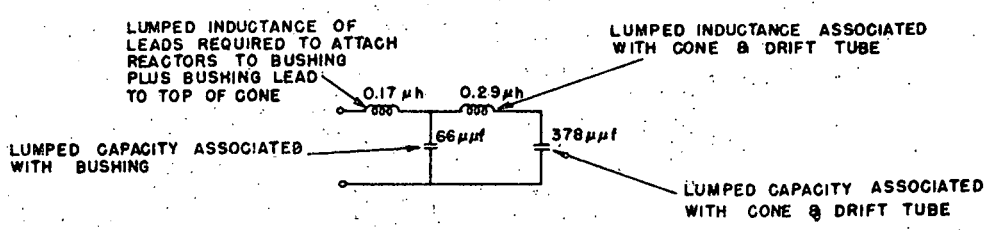

FIG. 10

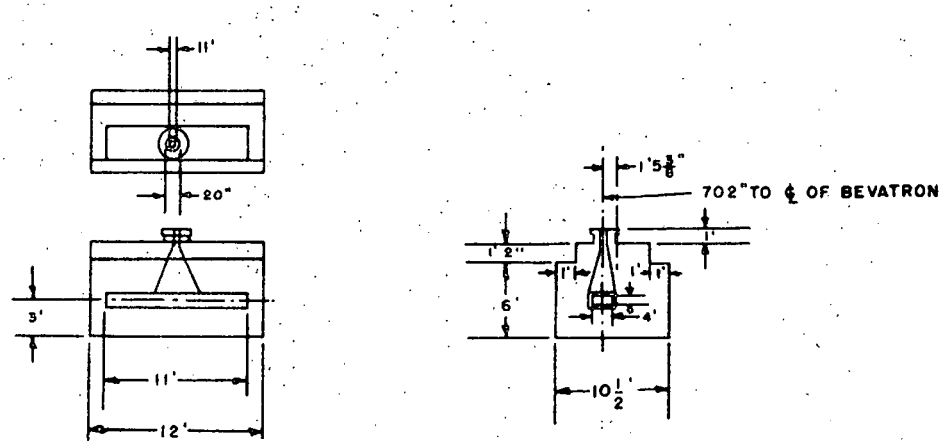

NORTH SIDE ELEVATION

WEST END ELEVATION

FIG. 11

MU 3583

Fig. 10 - Equivalent Circuit of Drift Tube and Tangent Tank

Fig. 11 - Physical System of Drift Tube and Tangent Tank

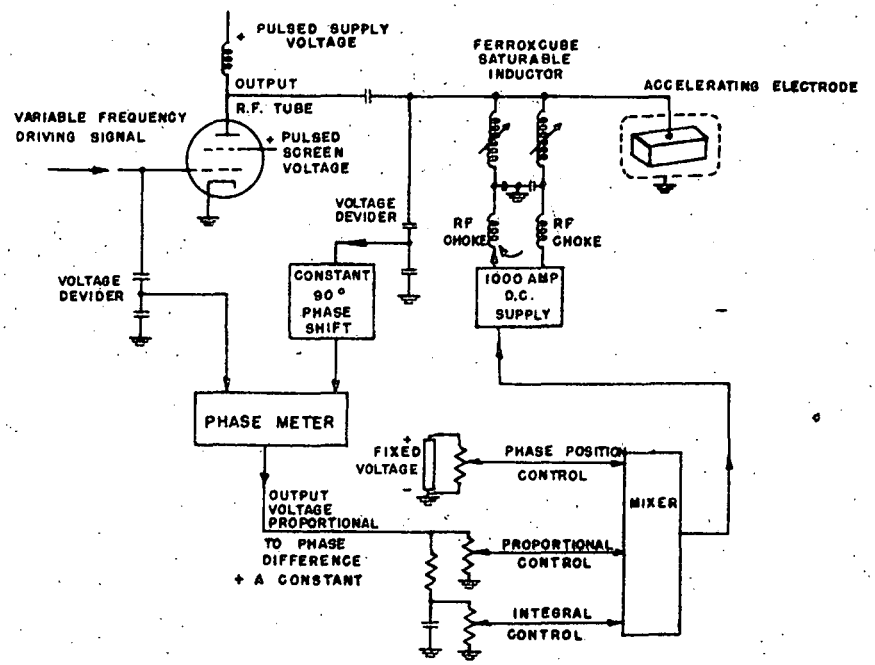

FIG. 12

MU3584

Block Diagram of Self Tracking System

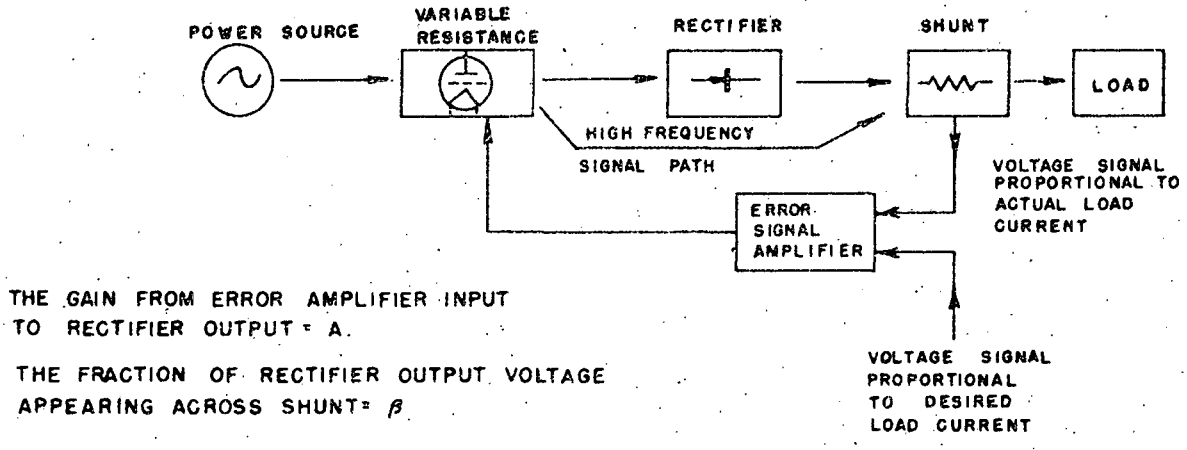

THE GAIN FROM ERROR AMPLIFIER INPUT TO RECTIFIER OUTPUT = A.

THE FRACTION OF RECTIFIER OUTPUT VOLTAGE APPEARING ACROSS SHUNT = β

FIG. 13

MU3585

Basic Block Diagram of 1000 Ampere Supply

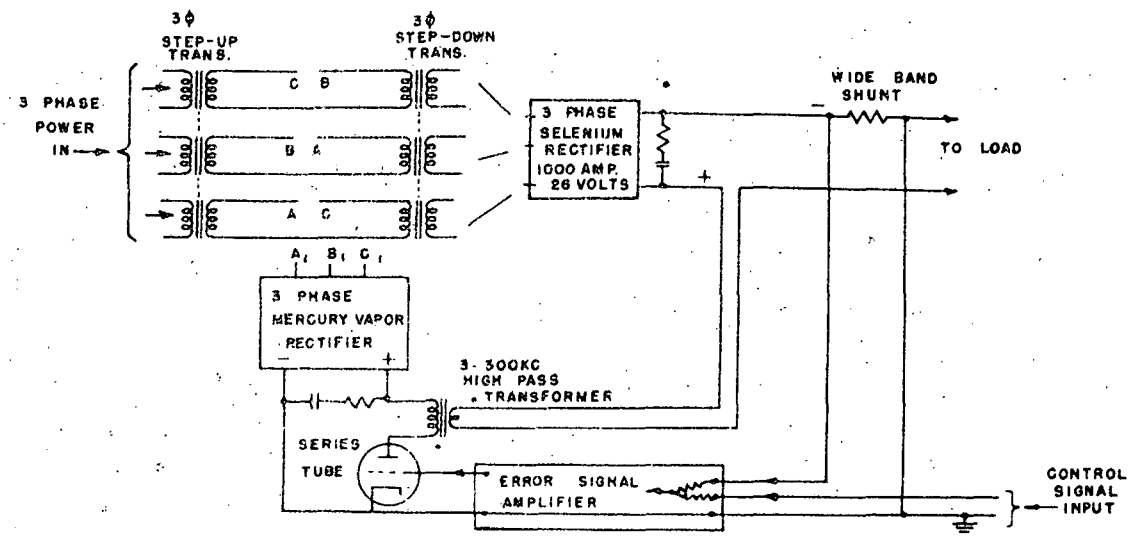

FIG. 14

MU3586

Modified Block Diagram of 1000 Ampere Supply

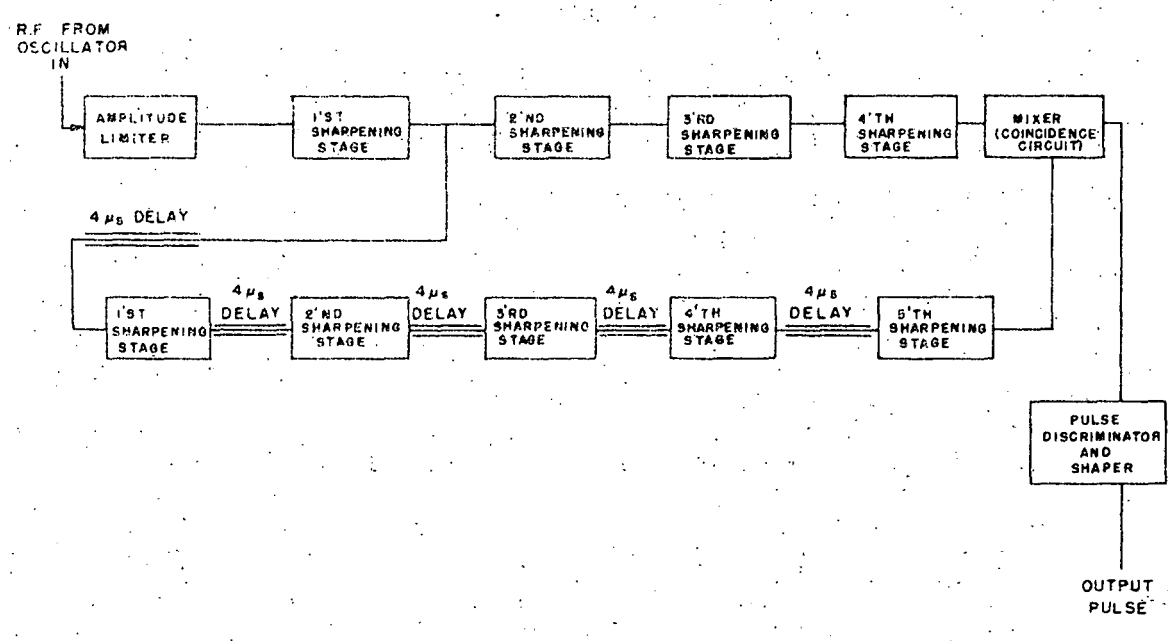

FIG. 15

MU3587

Block Diagram of Frequency Marker