UCRL-17611

University of California

Ernest O. Lawrence Radiation Laboratory

MP II INFORMATION MANUAL

John M. Ferguson

June 7, 1967

TWO-WEEK LOAN COPY

This is a Library Circulating Copy which may be borrowed for two weeks. For a personal retention copy, call Tech. Info. Division, Ext. 5545

Berkeley, California

UCRL-17611 cy. 2

DISCLAIMER

This document was prepared as an account of work sponsored by the United States Government. While this document is believed to contain correct information, neither the United States Government nor any agency thereof, nor the Regents of the University of California, nor any of their employees, makes any warranty, express or implied, or assumes any legal responsibility for the accuracy, completeness, or usefulness of any information, apparatus, product, or process disclosed, or represents that its use would not infringe privately owned rights. Reference herein to any specific commercial product, process, or service by its trade name, trademark, manufacturer, or otherwise, does not necessarily constitute or imply its endorsement, recommendation, or favoring by the United States Government or any agency thereof, or the Regents of the University of California. The views and opinions of authors expressed herein do not necessarily state or reflect those of the United States Government or any agency thereof or the Regents of the University of California.

UCRL-17611
UC-37 Instruments
TID-4500 (50th Ed.)

UNIVERSITY OF CALIFORNIA
Lawrence Radiation Laboratory
Berkeley, California

AEC Contract No. W-7405-eng-48

MP II INFORMATION MANUAL

John M. Ferguson

June 7, 1967

Printed in the United States of America
Available from
Clearinghouse for Federal Scientific and Technical Information
National Bureau of Standards, U.S. Department of Commerce
Springfield, Virginia 22151
Price: Printed Copy $3.00; Microfiche $0.65

MP II INFORMATION MANUAL

Contents

Abstract v

I. Introduction 1

II. Input Section 2

Machine Input Information (General) 8

III. Output Logic 8

IV. Film-Drive System 14

V. Ferranti System 17

Ferranti System Adjustment 18

VI. MP II Servo System 21

Servomotor 24

Servo Logic. 24

Control Devices 29

Handwheel 29

Bocci Ball 30

Tracking Servo 31

Sine Pots 34

Servo System Troubleshooting 36

Squaring the Loops 37

VII. Automatic Stage Positioning 38

VIII. Sequence Logic 38

References 48

MP II INFORMATION MANUAL

John M. Ferguson

Lawrence Radiation Laboratory
University of California
Berkeley, California

June 7, 1967

ABSTRACT

The logic systems of the Measuring Projector Two (MP II) or "Franckenstein" are described, and diagrams and some adjustment procedures are given. No attempt has been made to explain the electronic circuitry associated with the logic systems.

I. INTRODUCTION

This manual is intended as a source of information for the members of the Alvarez electronics maintenance group and for those who may be interested in physics research and in some of the ways in which the data are analyzed. It covers the operation of the Franckenstein "Measuring Projector Two" (MP II).

The data-analysis procedure can be briefly described as follows:

1. Scanning

On a scanning projector an operator looks at the tracks on every frame and locates the events of interest. As he identifies each event, he records a code description on a scan sheet. These numbers are later punched onto IBM cards and provide the input for the "Library" procedure.

2. Library

This computer procedure keeps a record of each event of its history during analysis. It also produces the printed lists and IBM cards for the events that are to be measured.

3. Franckenstein

The Franckenstein (MP II) projects the image of a 72-inch hydrogen bubble chamber photograph on a screen. There are three views of each set of tracks. The tracks show the paths that were traveled by charged particles as they moved through the liquid in the chamber. The film is clamped to a stage which can be moved so that any point on the film (any part of a track) can be aligned with the stationary cross hair on the screen. The x and y coordinates that give the exact location of the stage are then recorded by pressing the coordinate button. This coordinate information is punched out on paper tape or magnetic tape as a set of binary numbers. (For an explanation of "binary," see IBM 7090 Reference Manual, page 111.) To measure a track, the operator moves along it, recording a series of coordinate points.

4. Programs

The magnetic tape output from the Franckenstein goes straight to the computer, but paper tape is first converted to magnetic tape. This magnetic tape is the input to the first of a series of computer programs that perform the various steps in analysis of events. Three views of each track have been measured on the Franckenstein (MP II). The first program, PANAL, checks for format errors in the input data, and chooses the pair of views to be used to give the best stereo reconstruction of each track. (It also does other jobs, including removing data to be deleted.) The second program, PACKAGE, does the spatial reconstruction of the tracks, and then a kinematical analysis of the event to determine whether

it fits the event-type hypothesis. Finally, the physicist receives from the computer a printout of the significant data concerning each event.

The following sections of the manual treat the theory of operation plus the practical operation of the MP II (Franckenstein), including some adjustment procedures.

II. INPUT SECTION

The input section consists of the logic (sets of directions) initiating the different readout functions of the machine. To prevent overlapping of data, the logic is interlocked so that no two functions can readout at the same time. The nomenclature associated with each is straightforward; for example the Indicative Data push button initiates the insertion of such basic information as roll number, frame number, data measured, and operator number. The input logic diagrams on file for each machine show adequately the sequence of events after a button is pressed. The general sequence of events is as follows: the pb (push button) initiates a relay that sets a flip-flop, the flip-flop activates a circuit to produce the scan pulses that provide the data readout. The scan pulses are generated by a scaler, and, after a predetermined readout has been obtained, the output of the scaler turns off the scan circuit by resetting the flip-flop. Indicative Data readout varies with the machine; for example, in MP II A it can be 4 to 5 words depending on desired mode of operation; MP II B, 5 words; MP II C and D, 16 words. The fiducial and coordinate readouts use one word each, except for the first one, when the indicative data (ID) are inserted. There are six characters per word. The lateral parity checking is odd; that is, a parity bit is inserted whenever the data in a character consist of an even number of bits.

MP II A and MP II B use only switches on an ID console to provide the view change, track number, and ID information. MP II C and MP II D use card readers plus switches to get the ID information; view changing and frame finding are done automatically. All data are now written on magnetic tape, but previously were put on paper tape (and still can be).

The input-output block diagram, Fig. 1, gives a general overall flow in the logic; the details related to each block are as follows:

Gating Logic for Push Button Functions

The block thus labeled provides the logic "permissive" to begin the output function. Since the inputs from all the push buttons are alike, we consider the detailed operation of the indicative data (ID) function, which is the first function used in the measurement format.

Certain requirements must be met before a data output can be obtained; the inhibit functions that operate until the requirements are met are called interlocks. On MP II C and MP II D, which have the card reader and the automatic frame finder, the card reader has to be closed with a card in it before the system will function, and also the frame to be measured has

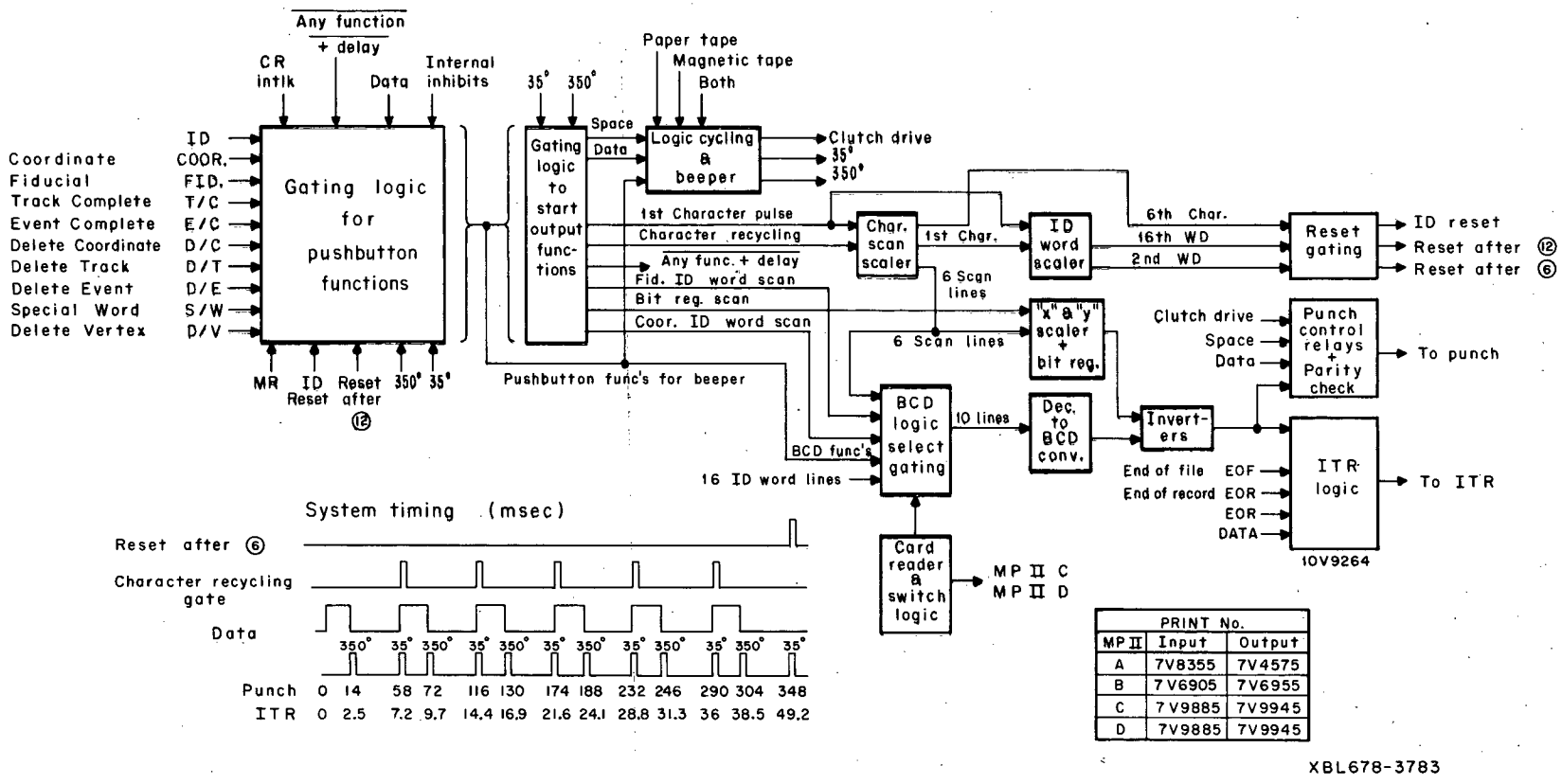

PRINT No.		
MP II	Input	Output
A	7V8355	7V4575
B	7V6905	7V6955
C	7V9885	7V9945
D	7V9885	7V9945

Fig. 1. MP II input and output logic.

to be found if the film drive system is in the "auto" mode. The "ITR Inhibit" (ITR = incremental tape recorder) interlock is on all the MPII's; the ITR unit must be in "Ready" before data will be accepted. The "Any Function + Delay" "not" function is used to inhibit any other push-button functions while one is already in process. In regarding Fig. 2, it can be seen that the ID output function will be on until activation of the "ID Reset," which comes at the end of the 16th word for MPIIC and MPIID, the 4th or 5th word for MPIIA, and the 5th word for MPIIB. Figure 2 is typical for ID for MPIIC and MPIID, but MPIIA and MPIIB are practically the same except for the "Card Reader and Automatic Frame Finder" interlock.

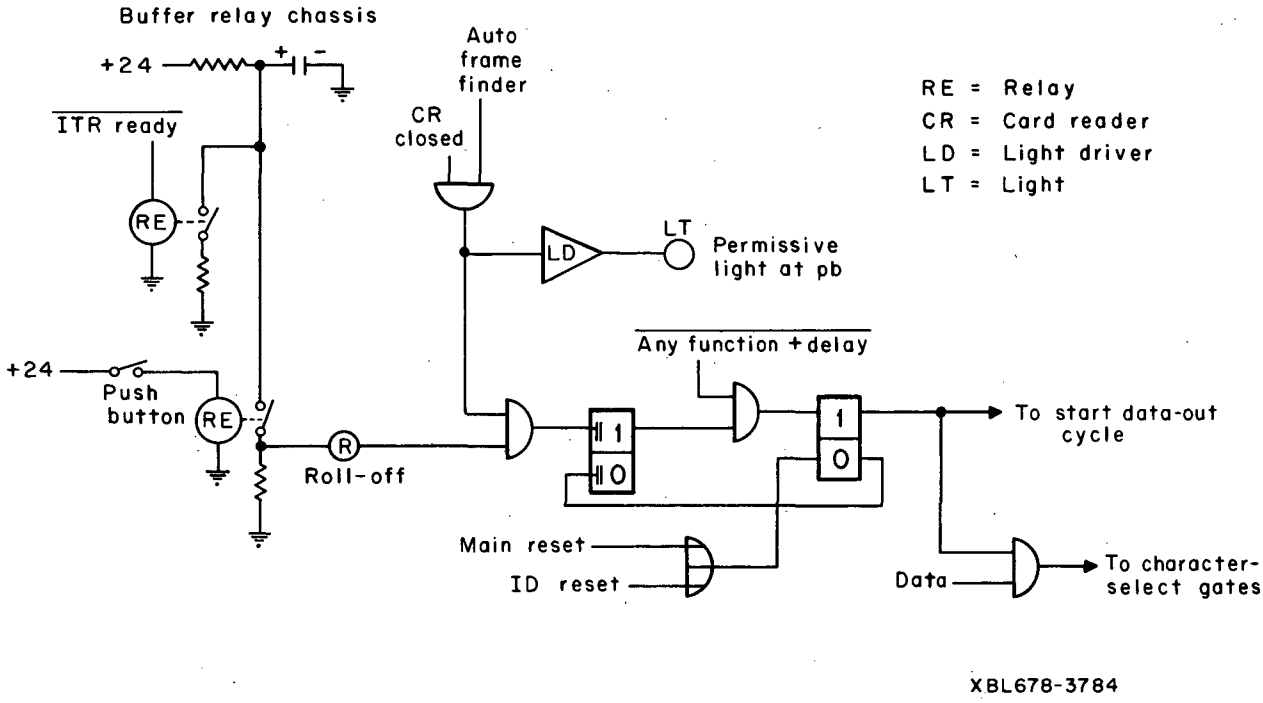

Fig. 2. Gating logic for push button functions.

The other push-button functions have interlocks also, but it wouldn't be practical to cover every one, as they can be readily obtained from the corresponding input diagram on file. Note the logic sequence from the time the button is pressed. The +24 V through the button activates a relay which discharges a capacitor through a roll-off (integrator) into the first logic gate ("and" gate); note that if the ITR is not ready, the relay, which is in the buffer relay chassis, will be energized, keeping the capacitor discharged. The light in the pb, when lit, indicates a permissive for that function. The first flip-flop in the flow of data is "anded" with the $\overline{\text{ANY FUNCTION + DELAY}}$ input, which goes low after the function starts, thereby inhibiting any other function until after this one has been completed. The output of the second flip-flop then goes into the block labeled "Gating Logic to Start Output Function."

Note that there are two more outputs from the block marked "Gating Logic for Push-button Functions." One is the input to what is called the "beeper circuits," which consists of an oscillator and a speaker to give the machine operator an audio indication of when the function starts and ends when the MP II is in the "Magnetic Tape Only" mode. The beeper does not indicate whether or not the data are written on the magnetic tape! The other output is the input to the "BCD Logic Select Gating" circuitry. The outputs (inputs to the BCD logic block) are all from the pb's that give a BCD (binary coded decimal) output. They provide a permissive to obtain an output from the BCD pb function only (see Fig. 3). Figure 3(a) shows a typical logic circuit for the BCD pb function, using the "Special Word" function as an example. Two inputs are needed to obtain the output. The circuit of Fig. 3 is typical for all the pb functions using the switches. The switch setting determines what will be read out. Figure 3(b) shows a typical logic circuit for the ID output when the card reader is being used as a data source. (This circuit is used on MP II C and MP II D only.) The card, called the control card, corresponds to the event to be measured; it has been produced by the Library program. A card contains all the information (in binary) that is recorded on the punched tape as ID (see Fig. 4 for the card format).

The card also has punched decimal numbers, which are displayed on the Franckenstein panels as follows:

Decimal numbers:
- Roll number
- Frame number
- Beam track number
- Beam track number
- Total number vertices to be measured
- Measurement number
- Primary event-type number
- View number displayed on screen
- Vertex number being measured

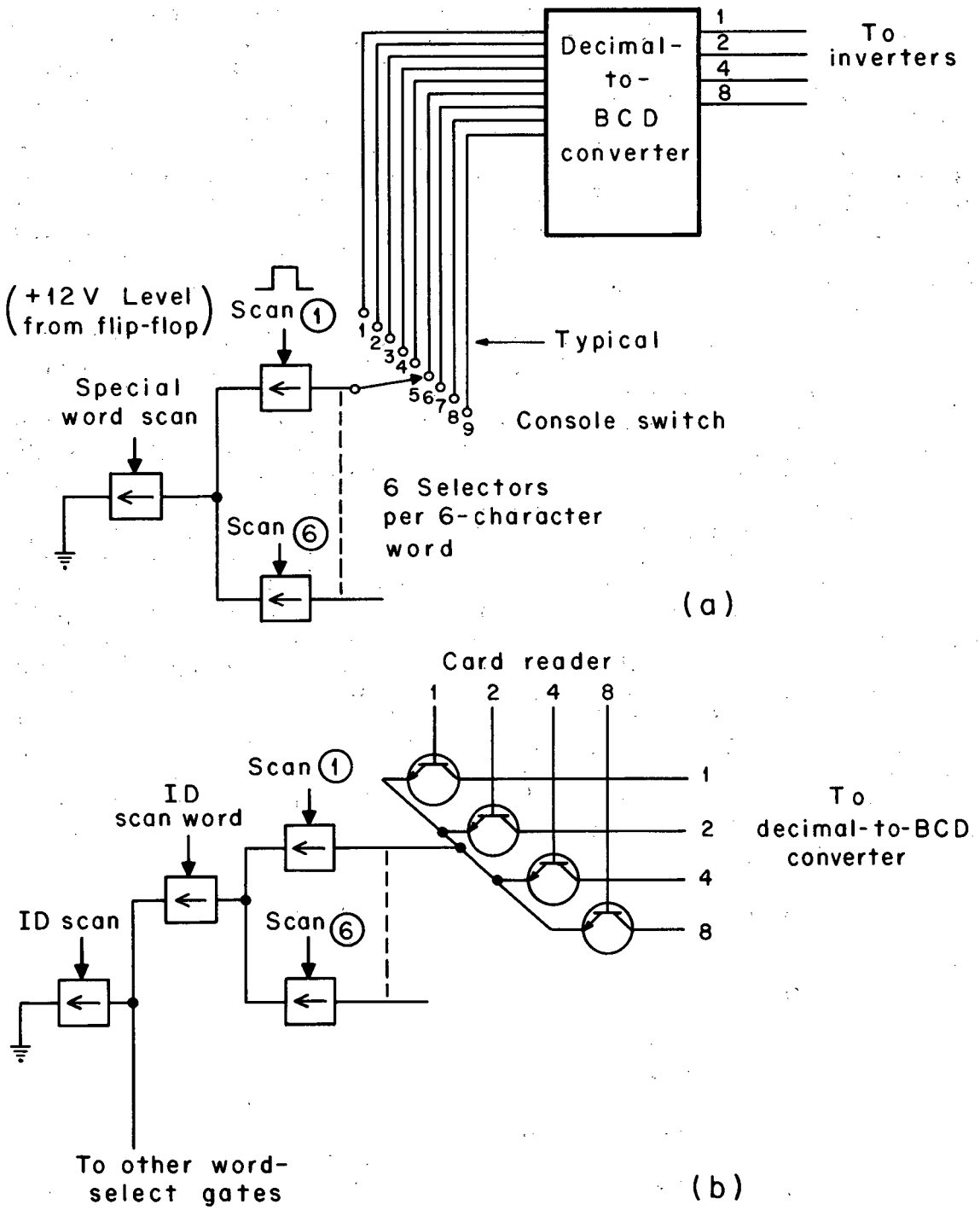

Fig. 3. Upper: Logic circuit for the BCD pb function.
Lower: Logic circuit for the ID output when the card reader is being used.

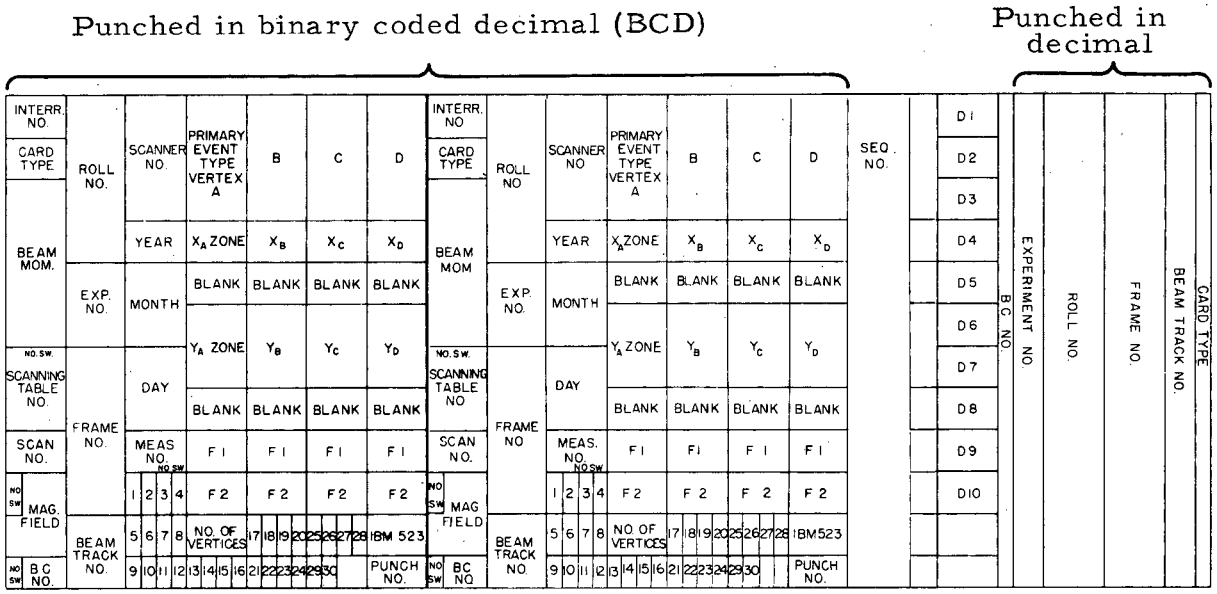

XBL 678-4444

Fig. 4. Format of a control card produced by the Library program.

For the function of the logic block labeled "Gating Logic to Start Output Function" we consider the outputs in the sequence in which they appear. First, the "1st Character Pulse" is generated, and is used to reset the ID word scaler and the character-scan scaler and also to initiate the first "data" pulse. When the MP II is in the "Paper Tape" mode, the data pulse drives the punch clutch as well as starting the cycling of the one-shot multivibrator to obtain the 35-degree and 350-deg cycling pulses (see timing diagram, Fig. 1). When it is in the "Magnetic Tape" mode, the data pulses act as "write" pulses, allowing data to be written on the magnetic tape. Note that on "Magnetic Tape Only" the cycling rate is faster because of the speed of response of the magnetic tape unit. The paper-tape punch has a slower cycling rate. After the first data pulse, the 35-deg and 350-deg pulses provide the data pulses and the "Character Recycling Pulse," which triggers the character-scan scaler. When punching or writing ID, note that the first scan pulse causes the ID word scaler to count up, and continues to step it up until the 16th count, wherein the "ID Reset" will be generated to stop the output. The 6th character-scan pulse is used to get the "Reset After 6" reset function. The output from the ID word scaler labeled "2nd Word" is used to obtain the "Reset After 12" function. The "Reset After 6" and the "Reset After 12" functions are used to reset the pb functions other than ID. The "Space" output is used to insert a punch in the 8th row on the paper tape or to insert a 3/4-in. gap

on the magnetic tape, in order to separate one group of data from the next. The "ANY FUNCTION + DELAY" output is generated when a pb function flip-flop "goes high," and (as mentioned before) is an interlock function. The "Fiducial ID Word Scan" and "Coordinate ID Scan" are both permissives for the identifying word of those two functions. The "Bit Register Scan" is a permissive for reading out the scaler configuration, which is the binary readout.

Machine Input Information (General)

MP II A

This machine is the prototype of the MP II concept. It does not have standard logic boards. When one is troubleshooting, one must use extreme caution in pulling and inserting the logic boards in correct sequence, because a sudden surge in current could damage other circuits. The design (diagram 7V8355) is different from the other machines, and is a trifle more difficult to troubleshoot than the others, but the basic logical format is the same.

MP II B

This machine has standard logic boards. The input diagram is 7V6905. The measuring format with respect to ID is essentially the same as MP II A.

MP II C and MP II D

These two machines are the same in logic format. They both have semiautomatic features associated with the stage movement. The logic input diagram is 7V9885. The sequential logic input diagram 7V9845 shows the semiautomatic features of these two machines.

III. OUTPUT LOGIC - George Gibson

The output logic records on magnetic tape or paper tape, the data generated in the input logic, sequential logic, and bit registers from the "X" and "Y" Ferranti system, together with parity. The only data originated in the output logic are parity and words of zeroes (no bits) that are generated by the file gap pb on the magnetic tape unit to identify the end of data on the tape. The output logic acts as a link between the machine and the paper tape punch or the magnetic tape unit.

Figure 5 is a block diagram of the output logic. Refer to Fig. 1 (of the input logic) to see the overall input-output logic block diagram. The following detailed information pertains to the blocks as seen in Fig. 5. Figure 6 is a logic diagram of MP II C and MP II D paper tape output logic. The paper tape output logic for MP II A and MP II B is similar to Fig. 6,

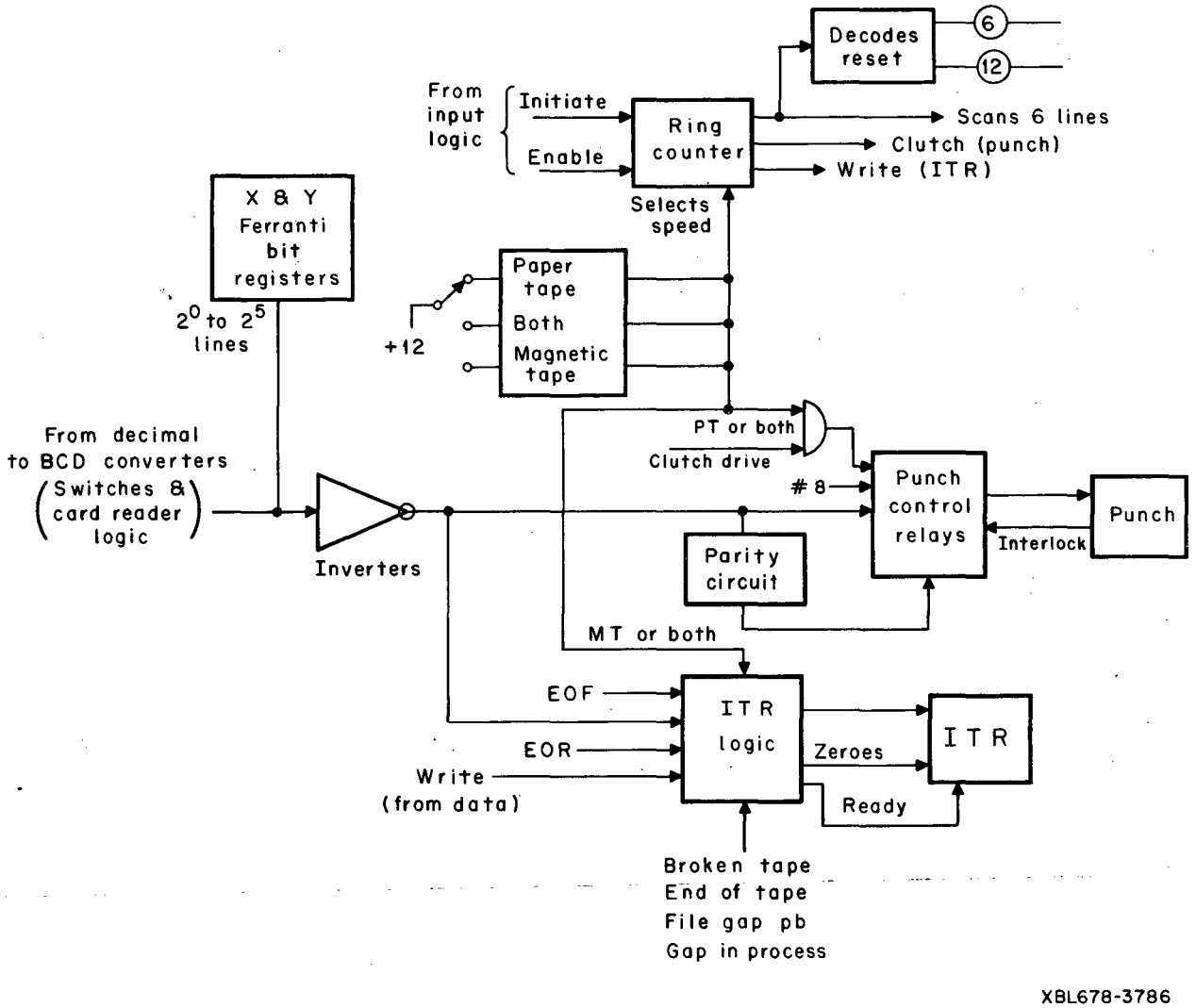

Fig. 5. Block diagram of the output logic.

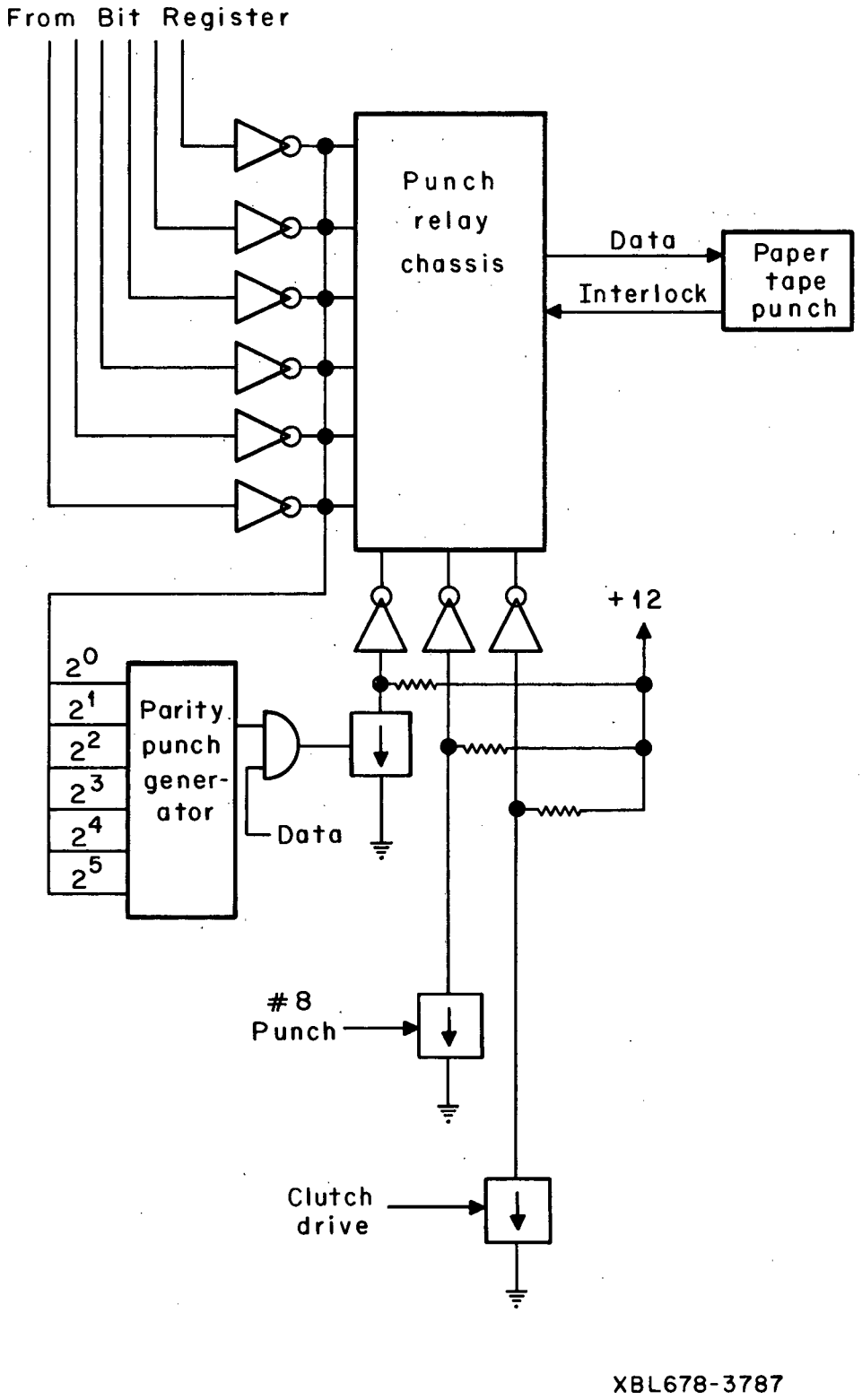

Fig. 6. Logic diagram of paper tape output logic, MP II C and MP II D.

and for this discussion can be considered the same. Figure 6 shows lines 2^0 through 2^5 going into inverters. These inverters act as line drivers, feeding both the relays and the parity circuit. The lines from the bit register are normally high (+ 12 V) and go low (0 V) at data time; the inverter is there to provide a high input to actuate the relay in the punch relay chassis to punch the corresponding bit. The punch for the 8th channel (#8 punch) is generated in the input logic, and is used to indicate an end of a record or track (one #8 punch) or end of a file or event (two #8 punches). The clutch drive releases the mechanical lock in the punch so that a punch cycle can be initiated. In the MP II B, II C, and II D, clutch drive is derived from data or from a #8 pulse, but in MP II A from a ring counter.

Figure 7 is an expanded diagram of the parity circuit used to generate parity on the paper tape. The parity generator is a half-adder from which the sum and carry outputs are fed into an "Exclusive Nor". Any even number of ones on the input causes a one on the output. Parity is gated during the data punchout only.

The ring counter (Fig. 5) is the device that scans all the data lines for readout. The ring counter starts to run at a command from the input logic, and runs for a predetermined time, depending on the output, information, such as: (a) delete function, (reset after 12); (b) first coordinate, (reset after 12); (c) special word (reset after 12); (d) coordinate (reset after 6); and indicative data (reset after 96 for MP II C and II D), after 24 or 30 for (MP II A), and after 30 for (MP II B). In MP II A, the ring counter generates the clutch and write pulses. The rate at which the ring counter runs is determined by a series of one-shots which provide what are called a 35-deg pulse and a 350-deg pulse. In MP II C and II D, there are two sets of these one-shots, so as to select a faster timing rate for the magnetic tape mode (the punch requires a longer time).

Figure 8 shows the logic connections associated with the magnetic tape unit. The level shifters shift the logic level from the MP II (+12, 0 V) to the ITR bin logic level (0 V, -6). The roll-offs are there to eliminate unwanted noise on the data lines. The other inputs and circuitry in the figure are self-explanatory. The tape unit has to be in "Ready" before data will be accepted by the tape unit.

"Ready" from the ITR is generated when the load strip passes under the photodiode head on the ITR, just before the record head, and it remains on until the tape breaks, the tape runs off the end, the rewind is actuated, or the ITR is turned off. There are level shifters which make the machine logic levels compatible with the +10 V and 0-V ITR logic, and vice versa.

The magnetic tape is checked for parity in two different ways. One is an odd-parity check on each character, and the other a longitudinal parity check at the end of each record and the end of each file. A parity check of each character consists of putting a one or a zero under it to make it have a total that is odd. The longitudinal parity circuit puts in a bit if needed to make the total number of bits on each horizontal line an even number.

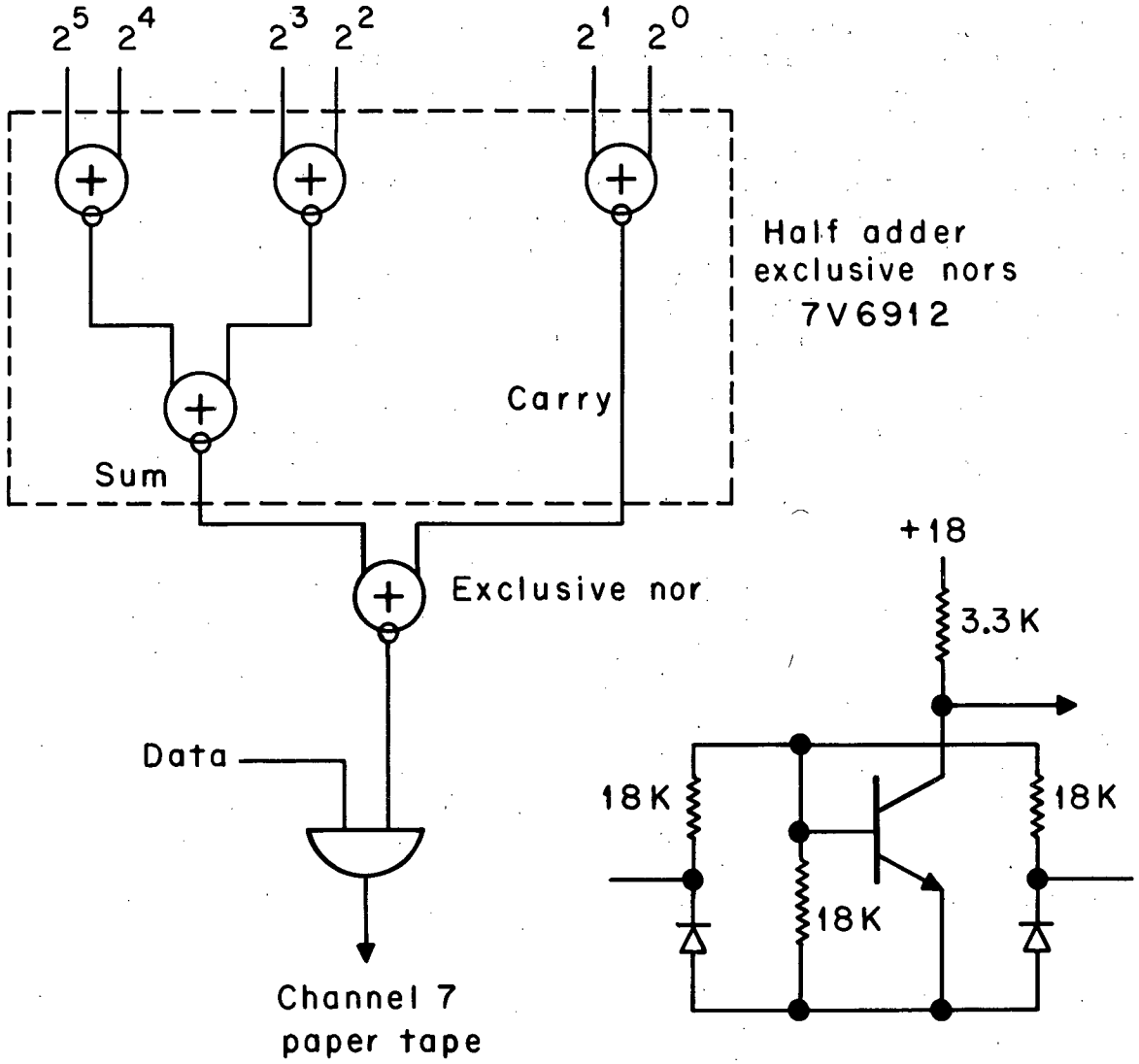

Exclusive or
7V8472-2

In	In	Out
0	0	0
0	1	1
1	0	1
1	1	0

Exclusive nor
7V6912

In	In	Out
0	0	1
0	1	0
1	0	0
1	1	1

XBL678-3788

Fig. 7. Expanded diagram of parity circuit for paper tape.

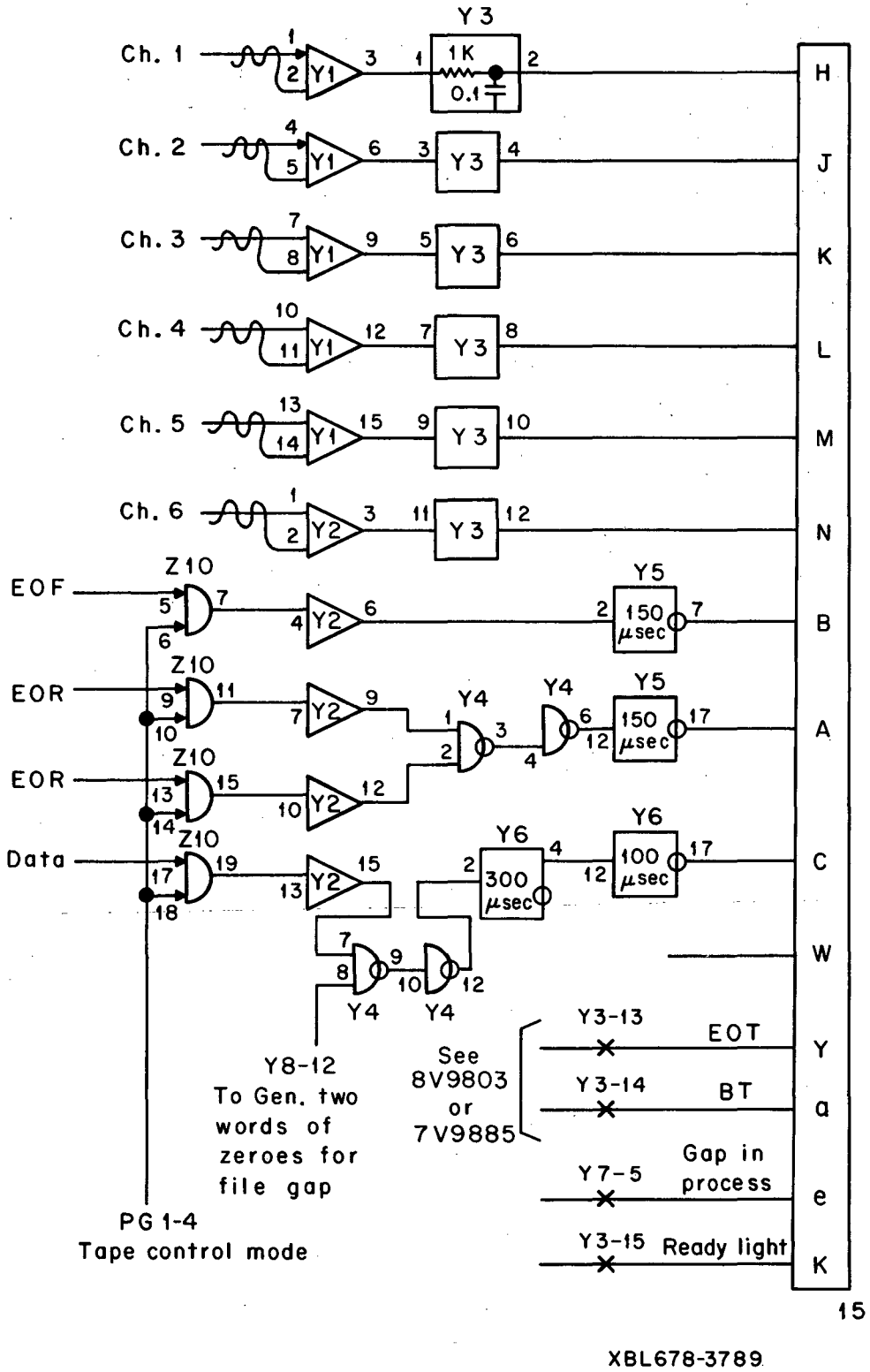

Fig. 8. Logic connections associated with magnetic tape unit.

The EOR or EOF signal generated in the ITR logic causes the ITR to record a longitudinal parity, and then the EOR or EOF. At the end of the EOF gap another longitudinal parity bit is inserted three spaces past the EOF mark. This in turn is followed by an EOR.

The odd parity on the ITR is similar to that on the paper tape except that it is generated internally in the ITR rather than in the logic. See Ref. 1 for more information.

IV. FILM DRIVE SYSTEM - James C. Hunter

The film-drive system consists of a closed-loop servo to move the film through the platen assembly, frame-detecting devices to stop the film at any selected frame, and many safety devices to protect the film and machine from abuse.

There are two modes of operation:

1. Manual, in which the film is positioned with the control panel,

2. Automatic, in which the desired frame number is read off an IBM card and the film is automatically moved to that frame and centered.

The film is supplied to and taken up from the capstan unit by two self-contained reel units. Each reel unit can sense movement of the film in either direction, and feed out or take up film as necessary. If the film should break or get caught in the platens a reel-unit flailing arm pulls forward or drops back to a limit, where upon it gives an error signal to the capstan relay control chassis which disables the film drive.

The capstan unit performs two functions: it maintains constant tension on the film, and it moves the film forward or in reverse across the platen. Tension on the film is maintained by a tension motor driving a gear-and-clutch arrangement, which rotates the main capstan in a clockwise direction while rotating the slave unit in a counter clockwise direction. The amount of tension on the film can be regulated with a variac on the capstan relay chassis. The film is moved by a separate motor, which has two separate windings: a reference winding, which gets II5 Vac from the capstan relay chassis when the film drive is energized (controlled with a variac on the capstan relay chassis), and the control winding, which gets its power from the film-drive servo power amplifier. The direction of motion of this motor is controlled by the phase shift between the reference and control windings and its speed is controlled by the amplitude of the control voltage.

The film-drive power amplifier is a standard chopper input power amplifier. A ± dc level input is changed to a ±90-deg shift in the 60-Hz input to the drivers, and the level of the ± voltage determines the amplitude of the 60-Hz signal applied to the drivers. Also at the input to this amplifier is the tachometer input, which completes the servo loop. It should be noted that one of the common problems with these amplifiers is that the output tubes become weak, sometimes quite suddenly (type 811).

This completes the description of the systems used in MPIIA and MPIIB, but for MPIIC and MPIID the automatic function also is provided. See Fig. 9.

The automatic function depends on a Flys eye, which consists of a bank of photodiodes positioned under a projected image of the data box of the frame. This data box is the portion of the frame which contains the information about that frame, such as the frame number, roll number, and the time at which the frame was exposed. The part we are concerned with is the frame number. This is coded in BCD by the presence or absence of dots in a series of 12. Four dots are allowed for each decimal place; starting at the top of the projected image are units, tens, and hundreds, and below the hundreds dots is a 2-inch black square, used for centering the frame after it has been found (see diagram 8V504).

Since the photodiodes are positioned under the projected image of the data box, a dot that is present over a particular photodiode prevents any light from reaching it, but if no dot is present the light reaches the diode and causes it to conduct. These diodes are connected to the input of an amplifier which in turn is connected to one side of a group of "exclusive or" gates. The other side of these "exclusive or" gates is connected to the card reader. When all the fly's eye outputs match all of the card-reader outputs, a frame pulse is generated and the film is stopped and held in place for measuring of the events.

The sequence logic controls the automatic film drive. It takes all the input functions into consideration and then performs the necessary output functions. The Function Panel (diagram 8V208) displays the state of this logic at all times. The X functions are the input functions:

- X1 - Forward limit of supply or take-up or back limit of take-up
- X2 - Back limit of supply reel unit or splicer door open
- X3 - In automatic mode and card in place
- X4 - Reverse
- X5 - Forward
- X6 - Stop

The Y functions are intermediate or transit functions which are rather complex. For those oriented in Boolean algebra, diagram 8V242 may be enlightening, otherwise refer to diagram 11V397 for a logic description.

The Z functions are the output functions:

- Z1 - Permissive for measurement
- Z2 - Supply-reel unit brake
- Z3 - Take-up reel unit brake
- Z4 - Film clamps and platen vacuum
- Z5 - Forward
- Z6 - Capstan drive
- Z7 - Reverse

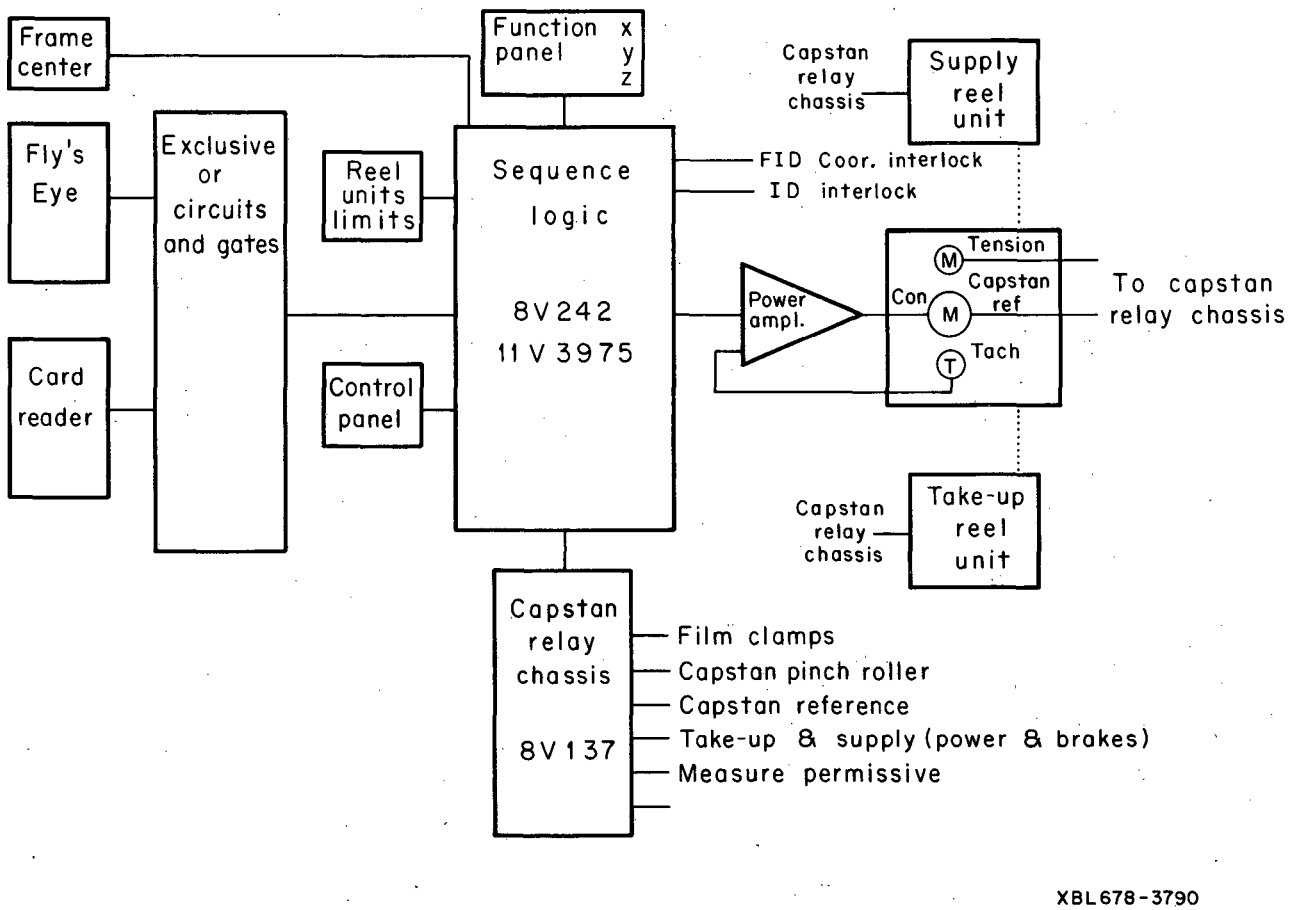

Fig. 9. Block diagram of MP II automatic frame finder logic.

To give a general idea of what takes place during a logic sequence we can run through a typical one. We assume the operator has the film drive in automatic mode and has placed a card in the card reader with the desired frame number on it. He presses the forward button, and thus starts the film drive in a low speed forward. When the first 2-in. black square (frame-centering block) goes by a strobe pulse is generated which switches the logic to high speed forward. The film continues moving at this high speed until the outputs of the fly's eye are the same as the outputs of the card reader. Since the film moves quite fast in the fast mode we usually overshoot the desired frame by two or three frames, at this time the film drive reverses. When the correct frame again goes over the fly's eye, now at low speed, another frame pulse is generated. This pulse starts the frame-centering timer and switches the sequence logic into the frame-centering mode. In this mode the 2-in. black block is centered between four photodiodes which are connected to two differential amplifiers in such a way as to have no output voltage when the block is centered, but to generate a plus or minus voltage that will drive the block toward the center if the block is off center. The output of these differential amplifiers goes directly to the film-drive servo amplifier. The frame-centering timer gives the film drive approximately 1 second to center on this block before it turns off the film drive and gives the operator a measuring permissive.

V. FERRANTI SYSTEM - Louie H. Sherriffe

The Ferranti or counting system[2] (used for reading the positions of the X and Y coordinates) consists of a Ferranti head assembly, a lamp, a small grating, and four phototransistors which are bolted to the stage and remain stationary, and a long grating that is attached to the movable section of the stage and is so located that it passes between the grating in the head and the phototransistors through which light from the lamp passes.

The etchings on the gratings are so designed that a sine wave is generated at the output of the phototransistor. These phototransistors are utilized as pairs, and the sine waves out between a pair are 180 degrees out of phase. These 180-deg-out-of-phase pairs are fed into two differential amplifiers; one output from each differential amplifier is used.

These two outputs are 90 deg out of phase and are fed into Schmitt Triggers. The outputs from these Schmitt triggers are applied to a directional logic circuit which determines whether the scaler counts up or down. The output of the scaler is fed into a bit register, from which the output (the coordinate information) is taken to the punch or magnetic tape unit.

All the counting systems are alike except for a variation in the differential amplifier for MP II A.

Ferranti System Adjustment

This adjustment (in phasing of the pairs) is made so that the Schmitt triggers give square waves, permitting accurate counting by the system. This square wave is required in order to give the timing needed at the direction logic (see Figs. 10 and 11) to gain the same number of count pulses when counting up as when counting down. See Fig. 12.

Pairs 1 and 3 should be 180 deg out of phase and so should pair 2 and 4. It is desirable for the amplitude of each signal to be the same; this is done by the shading screws, which determine the light applied to each phototransistor. The desired signal amplitude is approximately 0.5 V or more. The Ferranti lamp power supply may have to be turned up to gain the desired signal amplitude.

The signals out of the phototransistors can be monitored at the head or at the input to the differential amplifiers. The differential amplifiers are easier to get at and are usually used for this adjustment.

The hold-down bolts are loosened slightly and the phasing is adjusted by turning the bolt marked "Phasing adjustment" on the diagram. The desired condition is one in which the amplitude is maximum and the phasing is 180 deg out. It is possible to get a point at which the Ferranti counts in reverse; if this happens it is simpler to switch the inputs to the Schmitt trigger from the differential amplifier, because this adjustment can be rather sensitive. After having obtained the desired amplitude and phasing from the head, one next balances the differential amplifiers.

The inputs to the differential amplifiers are set by means of the input dc level adjustment board to swing equally about a-12-V level to establish a very close initial operation point. The inputs to each pair on the differential amplifier board are then shorted together (clip lead) and the outputs (collectors) are then monitored and set together at a 0-V level. After this the stage is run and the output swing of the differential amplifiers about zero is checked.

The outputs should swing equally about zero if the differential amplifiers are balanced. This condition can also be observed at the outputs of the Schmitt trigger. With the oscilloscope on "Algebraic," the following wave form should appear:

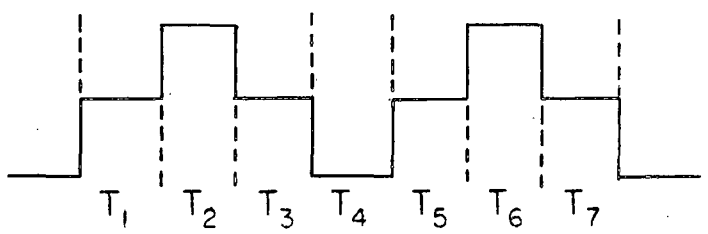

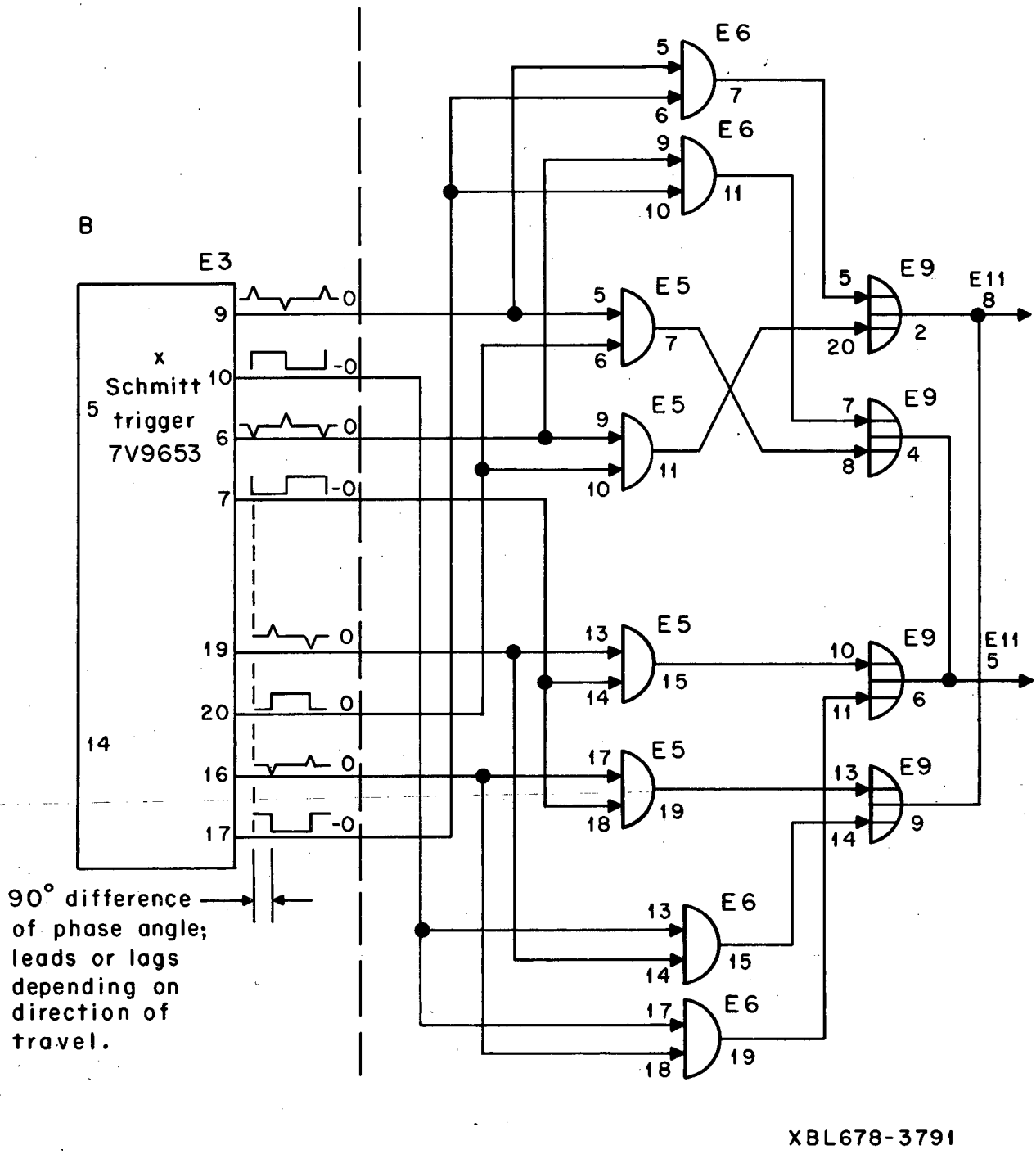

Fig. 10. Ferranti direction logic for x axis.

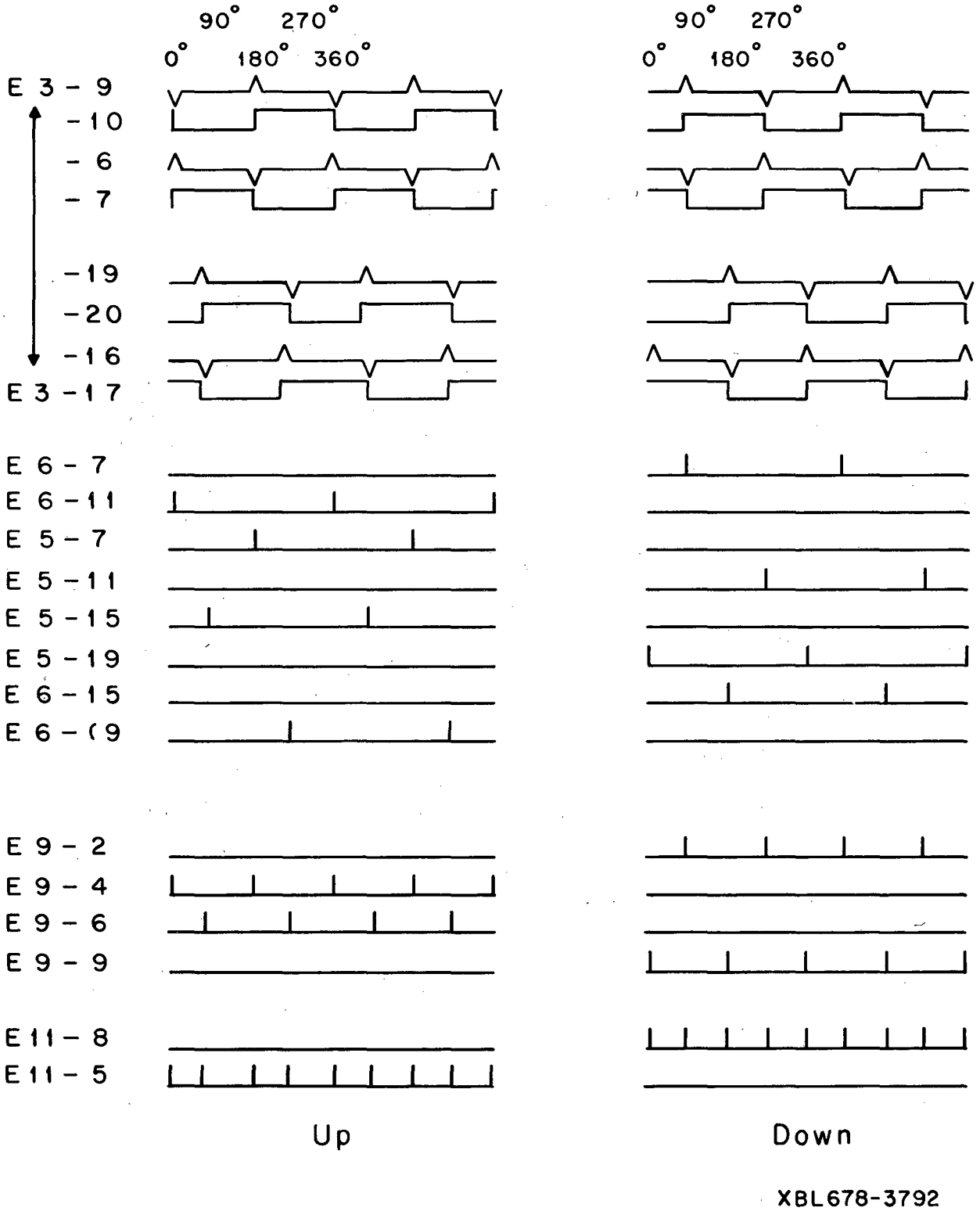

Fig. 11. Ferranti direction logic timing diagram, x axis only. (Reference 7V994.)

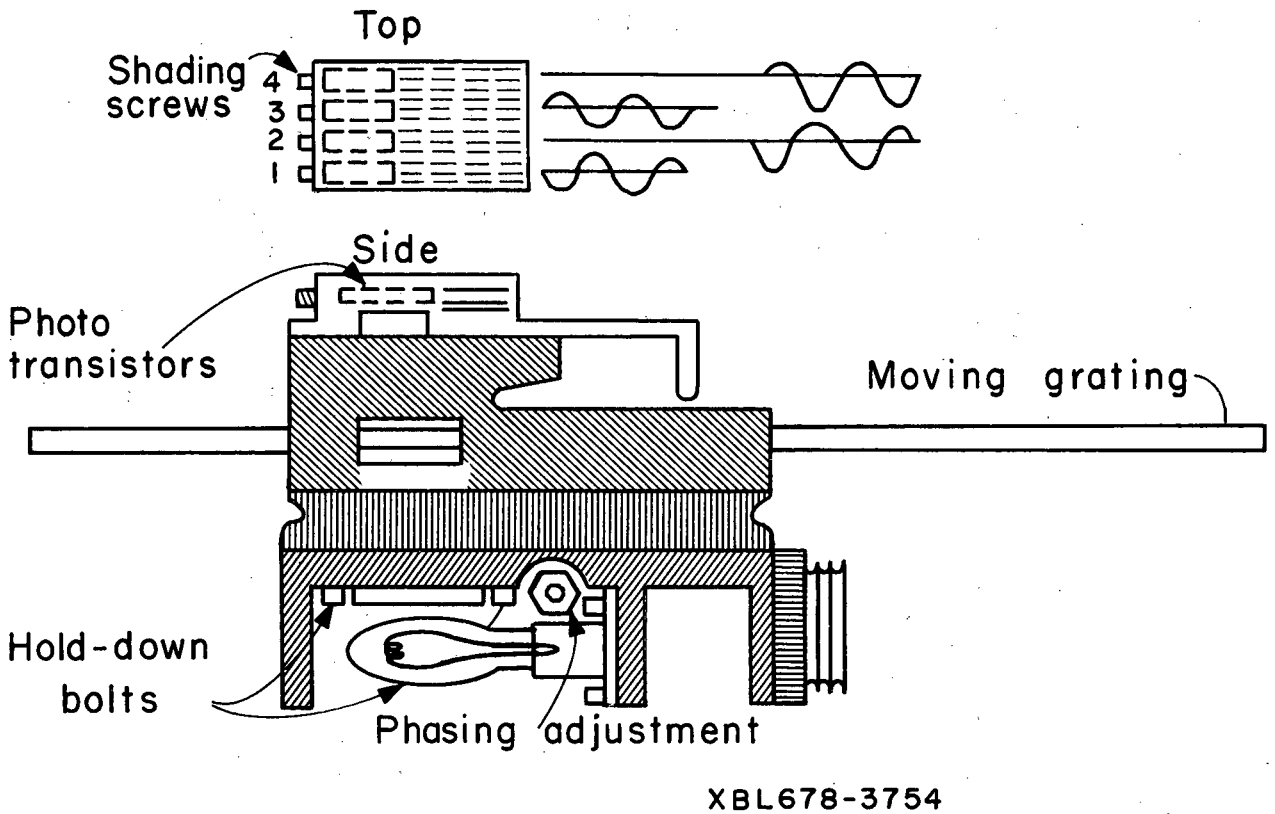

Fig. 12. Ferranti head assembly.

T_1, T_2, T_3, etc., will be of equal pulse width if the differential amplifiers are balanced; if not, changing the dc level of the inputs will bring them into balance. After this a return check is made (the counting is checked for accuracy), as determined from the readout, Fig. 13. A return count within two counts is considered accurate enough.

VI. MP II SERVO SYSTEM - Gordon S. Stutrud

An MP II is basically a stage to which a photographic film is clamped. Two motors apply forces at right angles to move the stage in a horizontal plane. A reversible scaler measures the movement of the stage for each axis and the contents of these scalers can be taken as "x" and "y" coordinates. The coordinates of any point on the film (on the stage) can be taken with respect to a fixed point above the stage by moving the stage until the point on the film is under the fixed point; the coordinates are then read from the scaler. The servo system drives the "x" and "y" stages. The servo system consists of:

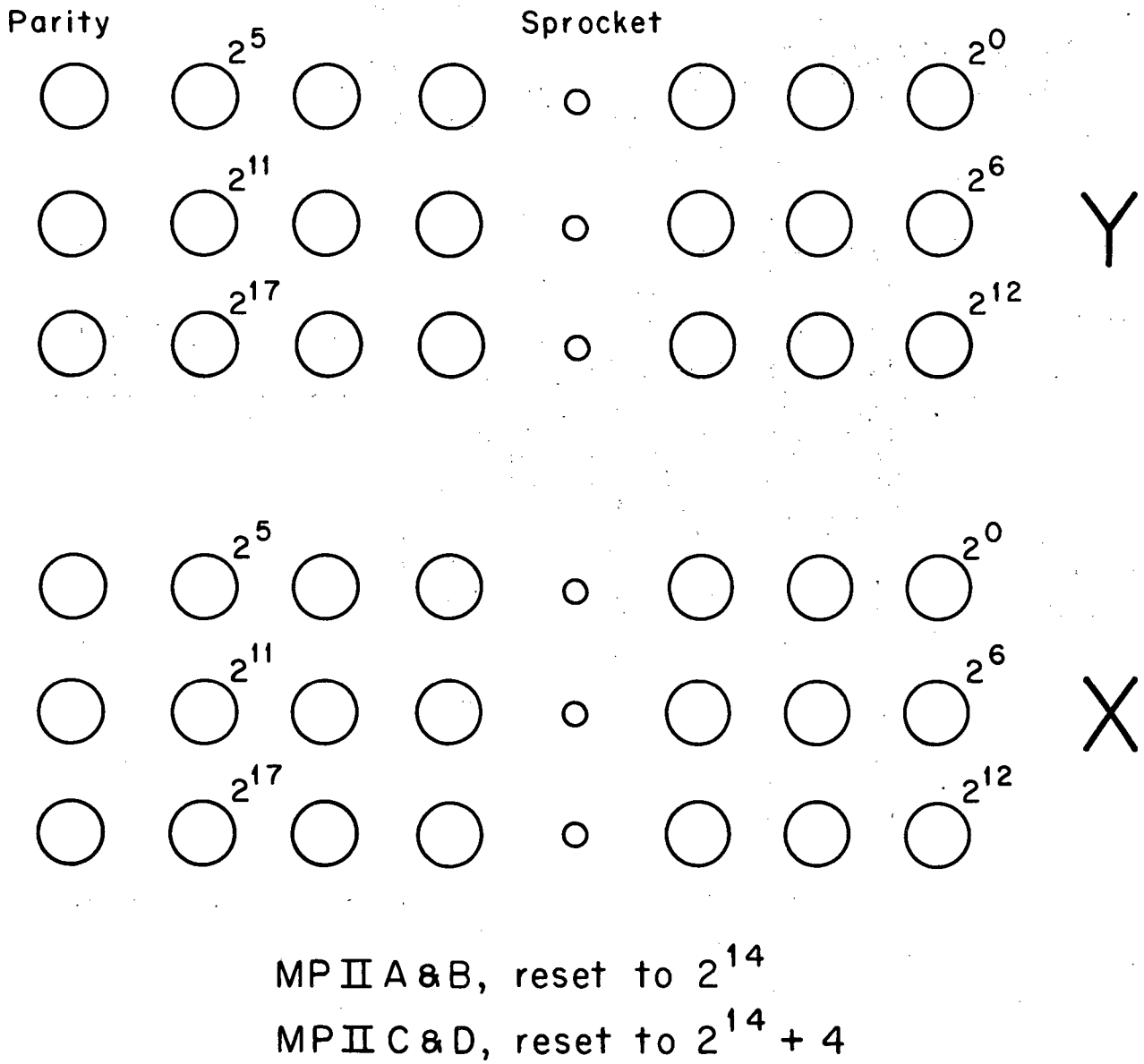

Fig. 13. Ferranti scaler readout. This readout is taken from the output of the reversible scaler, and is not always what is punched on paper tape or written on magnetic tape.

1. A motor for each axis which turns the respective leads screw moving the stage.
2. The servo logic, which changes speed and direction information into power levels required by the motors.
3. The control devices, which may include a bocci ball, a joystick, handwheels, time discriminator (tracking servo), and automatic stage-positioning devices. All these devices provide error signals containing speed and direction information.
4. A tachometer on each motor, which provides feedback of speed and direction of the motors. Knowing what the motors are doing and what is desired, the logic can attain tight control and prevent coasting or other undesired motion; this is called a closed-loop system (see Fig. 14).

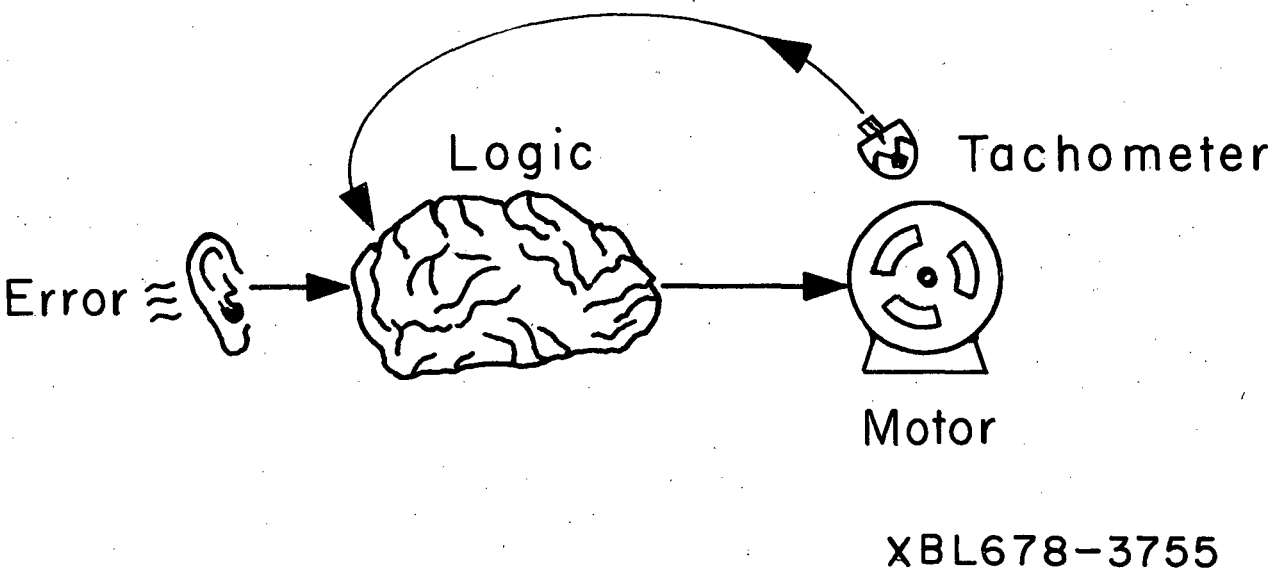

Fig. 14. A closed-loop system.

Servomotor

The servomotor is a two-phase induction motor with 115-V 400-cycle windings. The direction of rotation depends on which winding supply leads or lags in phase. The motor speed depends on the magnitude of the winding supplies. The MP II servo controls the speed by controlling the duty cycle of the winding supplies. The drive pulses are represented in Fig. 15.

Servo Logic

The servo logic includes a clock, control generator, direction logic, and the motor drivers, as indicated in Fig. 16. The clock provides the basic frequency and phase requirements of the servomotor (Fig. 17). For the sake of definition, the reference phase output is called ϕ and starts at zero deg. There is also an inverted ϕ or $\overline{\phi}$, and $(\phi + 90)$ and $\overline{(\phi + 90)}$. A fifth output called "reset" provides short pulses at 90 and 270 deg for use by the control generator.

The control generator extracts the direction and speed information from the error signal. The error signal is a dc level between -12 and +12 V. The polarity determines direction, and the magnitude determines speed of the servomotor. The control generator contains a ramp generator which is initiated by the clock reset pulses. Both a true and an inverted ramp are generated. The error signal polarity is compared with the ramps. The ramp whose polarity matches the error starts an output pulse which continues until the ramp reaches the magnitude of the error. The pulse then terminates until the next reset pulse starts another ramp. See Fig. 18.

For illustration purposes both ramps are shown initiating at the error-signal zero point. The heavy line represents the error. The two outputs are clockwise (cw) and counterclockwise (ccw), and only one can occur at a time. It can be seen that output duty cycle is controlled and direction is defined.

The direction logic determines which motor winding must lead or lag for proper direction of rotation. The CW and CCW outputs from the control generator provide the means by which the ϕ and $\overline{\phi}$, or the $(\phi + 90)$ and $\overline{(\phi + 90)}$ are controlled. The direction logic outputs are in a push-pull configuration (Fig. 18). It should be noted that the duty cycle variations from the control generator show up in the output of the direction logic.

The motor drivers amplify the direction logic or clock* output (or both) to the necessary power levels to drive the motor (see Fig. 19). In MP II B, MP II C, and MP II D the reference winding driver inputs come from the clock outputs (diagram 8V2014).

---

*In MP II A the reference signals are controlled as well as the control signal. Two control generators per axis are used (diagram 8V7004).

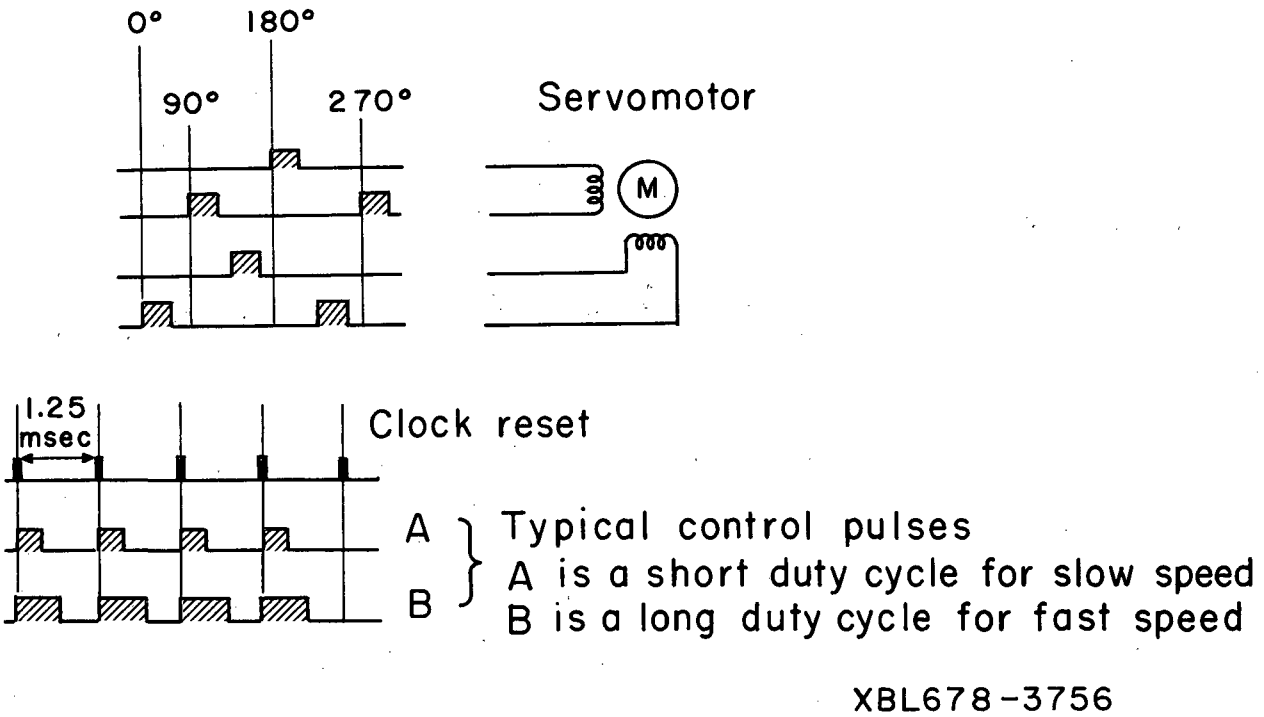

Fig. 15. Servomotor drive pulses.

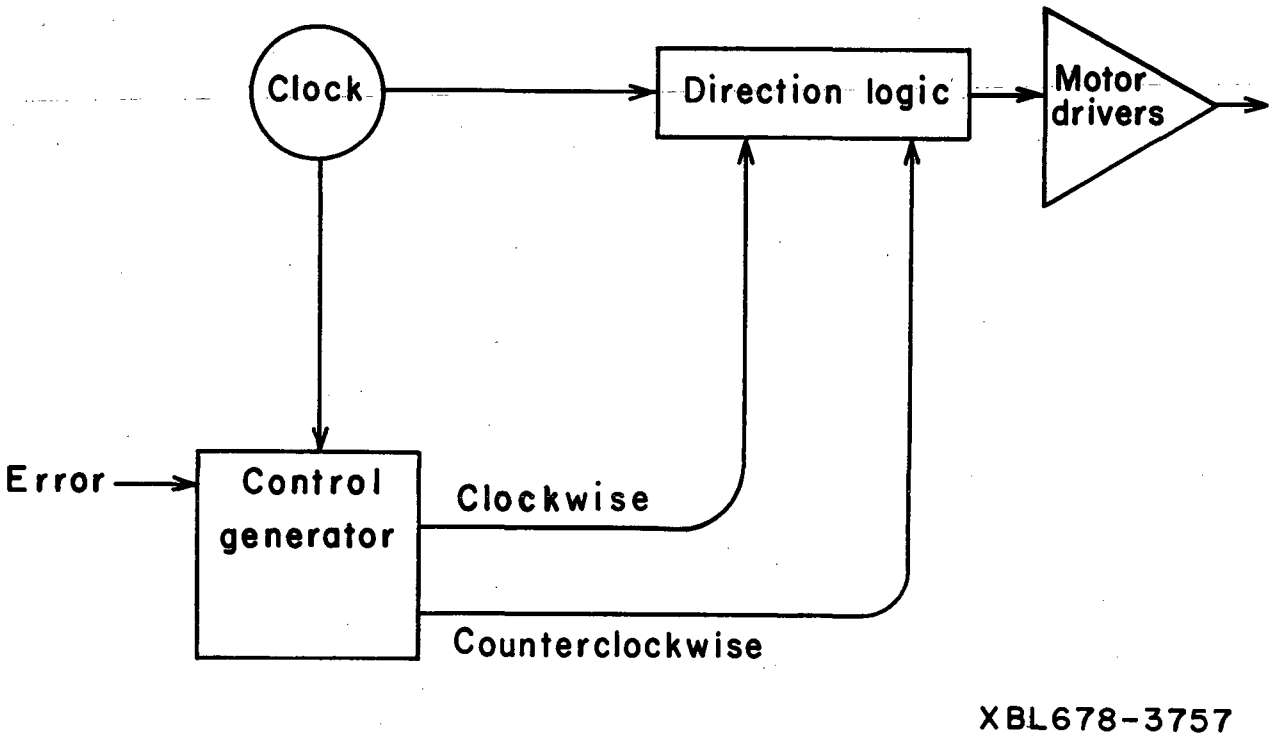

Fig. 16. Block diagram of servo logic.

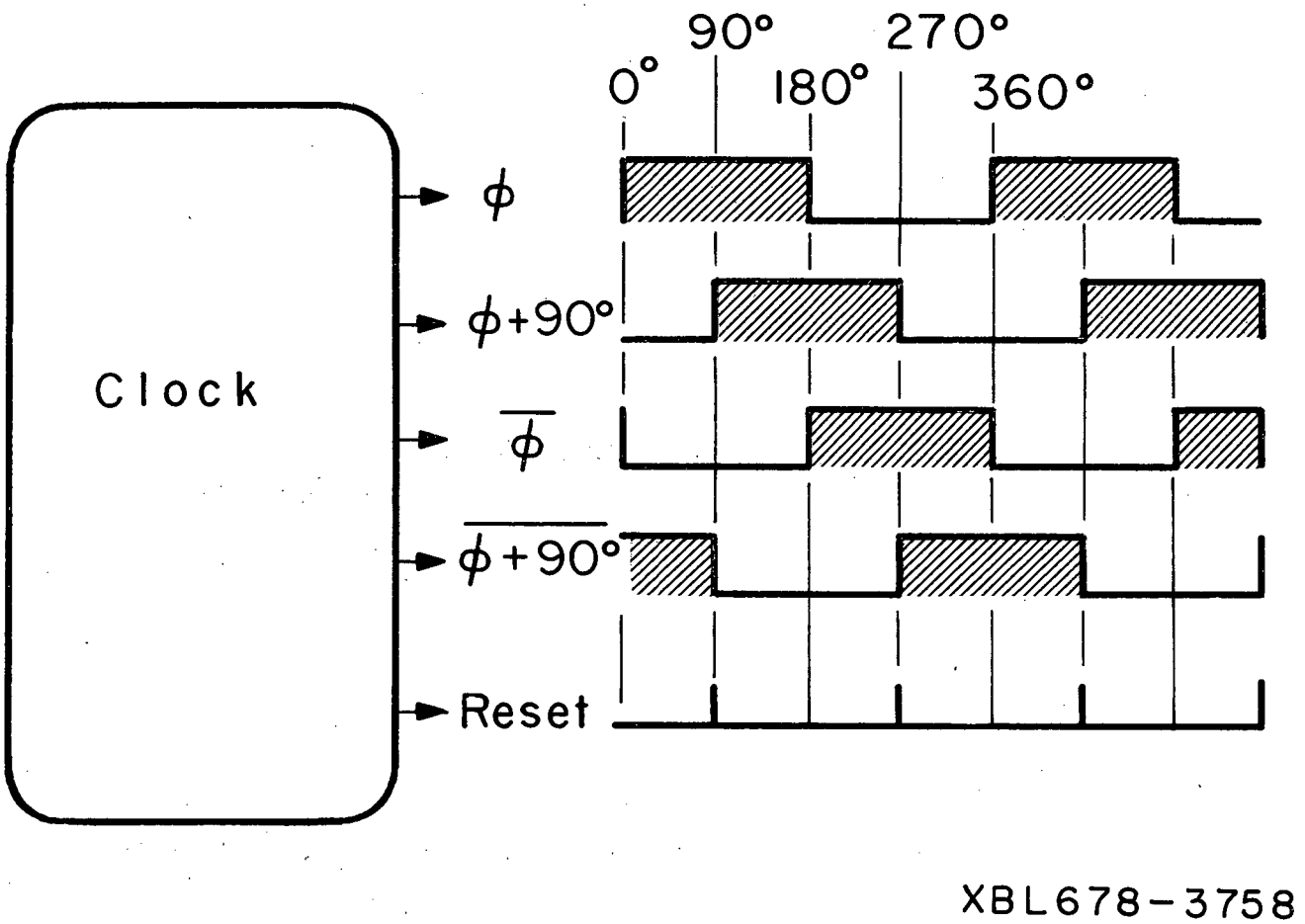

Fig. 17. Clock timing.

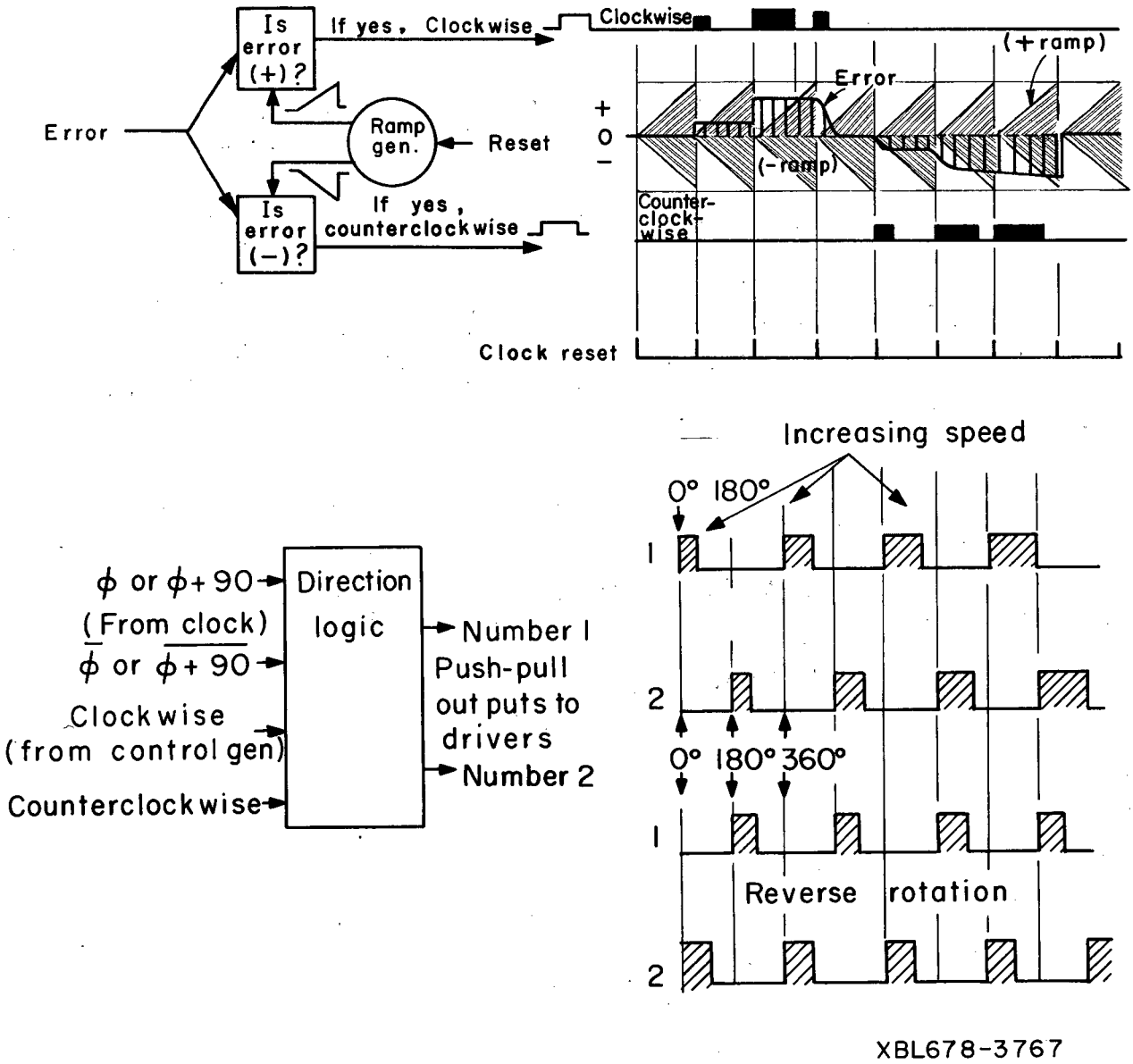

Fig. 18. Upper: Direction logic input.
Lower: Direction logic output.

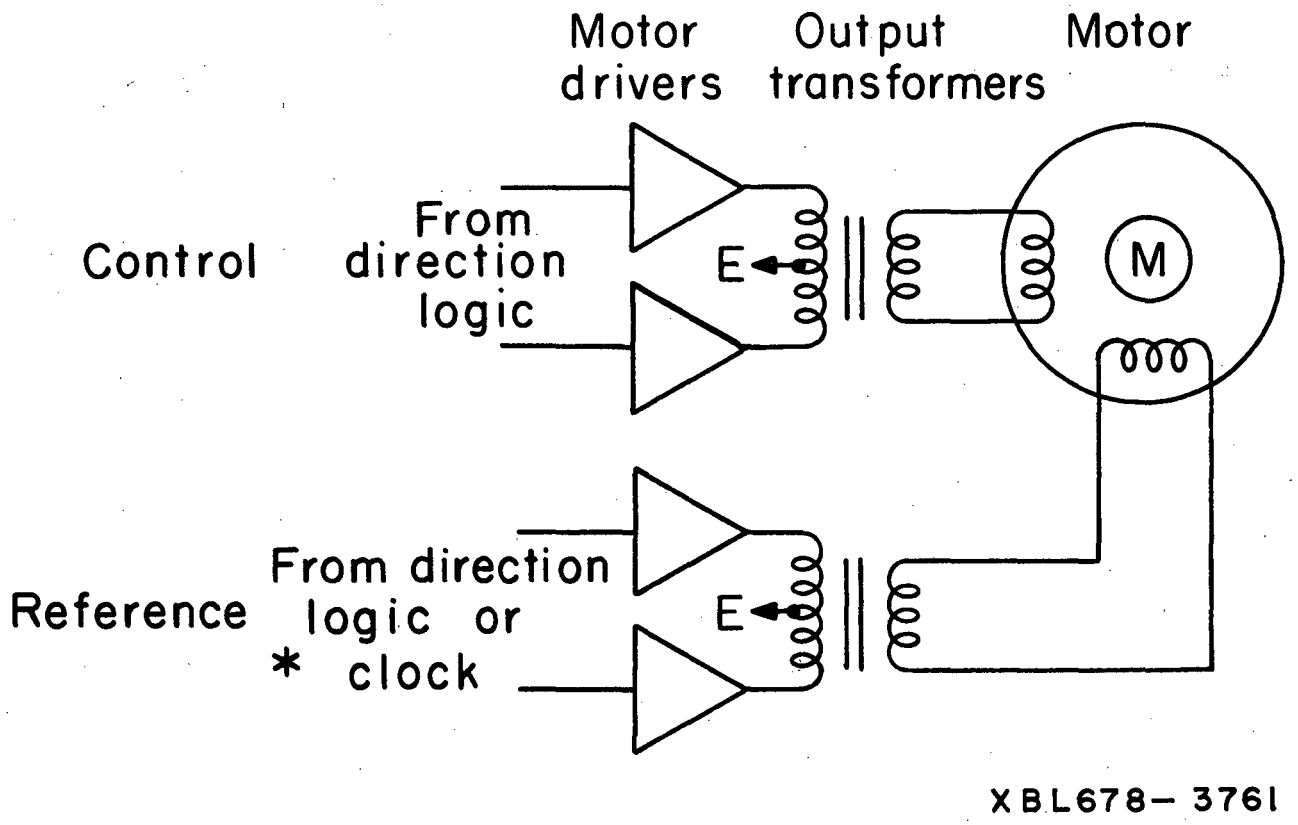

Fig. 19. Output of servo logic.

Control Devices

The joystick simply provides a voltage to the particular axis error input which corresponds to the axis desired. Two potentiometers, one for each axis, in the joystick vary the dc error signal in proportion to displacement of the stick from center. A microswitch in the joystick cuts out the handwheels or bocci ball, as applicable, when the joystick is in use. See Fig. 20.

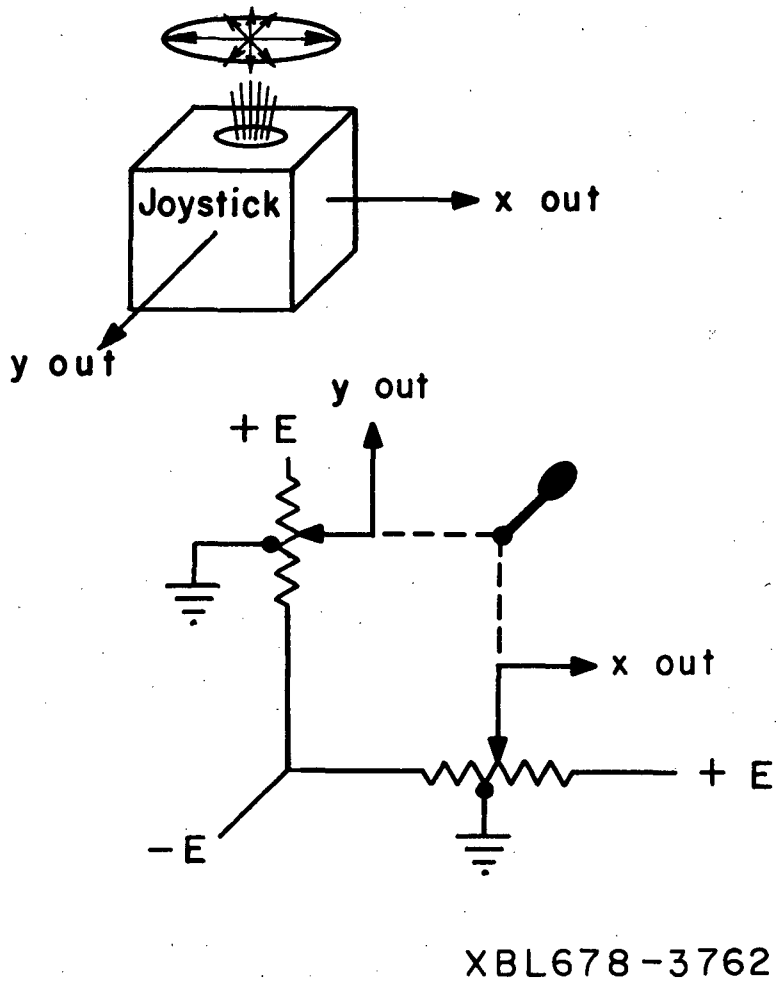

Fig. 20. Joystick diagrams.

Handwheel

There is one handwheel for each axis. Coupled directly to the handwheel is a synchro transmitter and a synchro control transformer. The synchro transmitter is connected in the normal fashion to a synchro receiver which is mechanically coupled to the servomotor shaft via a clutch. The stators of the control transformer are connected to those of the synchros. See Fig. 21.

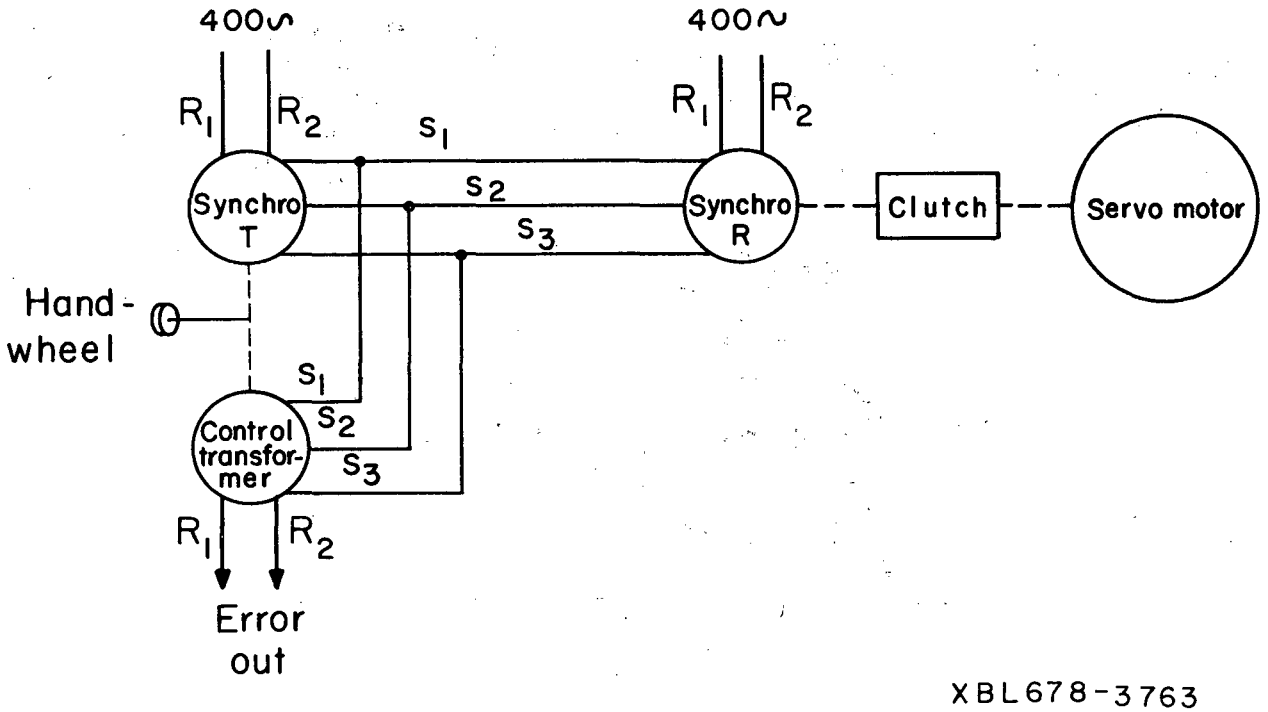

Fig. 21. Handwheel diagram.

Turning the handwheel turns the transmitter and control transformer. The receiver, being small, cannot turn due to the weight of the stage. This causes an unbalance in the stator lines which is induced into the control transformer rotor. The phase relation of the error depends on which way the transmitter was turned. The amplitude depends on how far it was turned. The control transformer output is converted to a dc error signal in the servo control chassis. This error signal tells the servo which way the motor must turn to correct the error. As the motor turns the phase difference between the transmitter and receiver becomes smaller and the error decreases until it nulls; the motor then stops turning. The receiver clutch releases when the joysticks is in operation and when the tracking servo is being used. This prevents handwheel oscillation.

Bocci Ball

The bocci ball or handball controls stage movement in both axes in lieu of the handwheels. The bocci ball unit contains a pair of rotary pulsers which detect ball motion at right angles to each other (Fig. 22).

Each pulser has a pair of outputs 90 deg out of phase with each other. The direction of rotation determines which output leads or lags. The speed of rotation determines the repetition rate of the outputs. The bocci-ball bin contains a direction logic which diverts a set of pulses to one of a pair of outputs, dependent upon the input phase relation from the pulser.

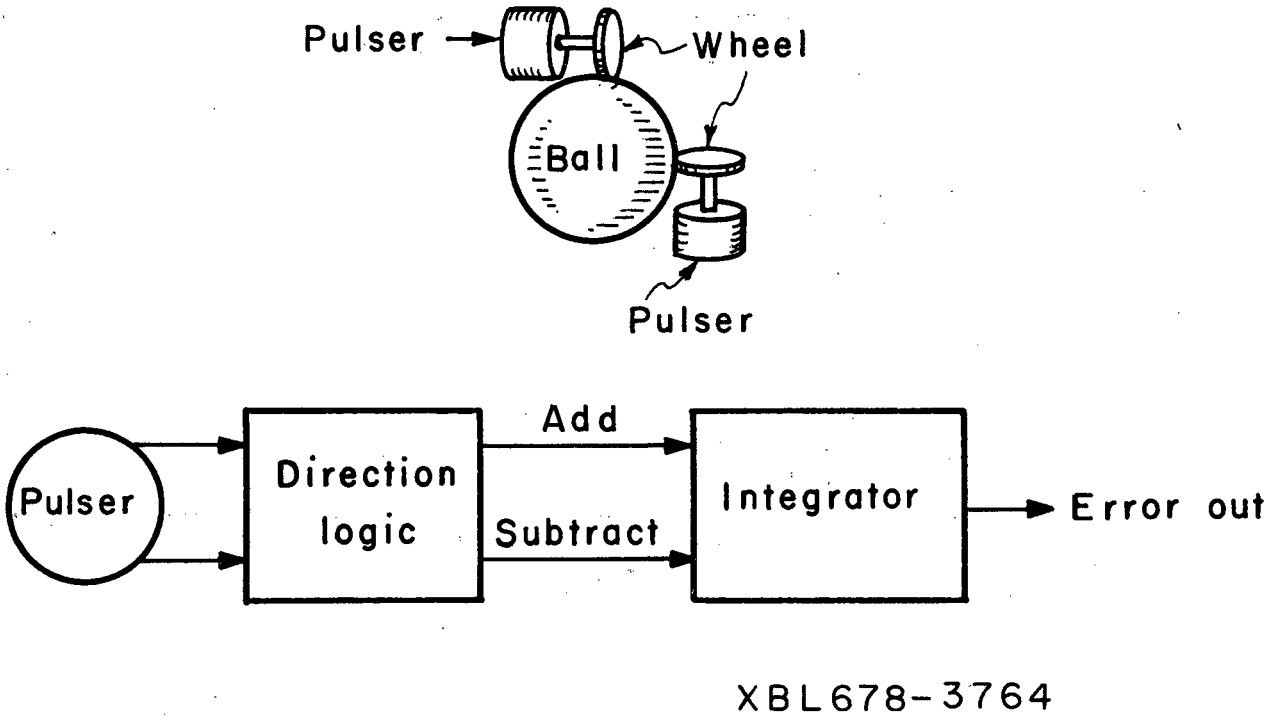

Fig. 22. Bocci ball diagrams.

Each respective direction logic output goes to an integrator input. One of the outputs is labeled "add" and the other "subtract." The integrator turns the pulses into a dc level whose magnitude is dependent upon input repetition rate. The integrator output polarity is determined by which of the two inputs is being used.

The bocci bin contains feedback circuits utilizing the Ferranti counter pulses to give positive control. Other circuits allow various speed control effects by gating add and subtract pulses in various ways. Circuitry is included to disable the bocci ball when the joystick or tracking servo is in use.

Tracking Servo

The tracking servo of an MP II enhances rapid measurements. This system utilizes a cross hair which appears on a screen that displays a highly magnified portion of the photograph on the stage. This cross hair represents the fixed point (mentioned earlier) to which the coordinates are referenced. The cross hair (Fig. 23) can be rotated through 360 degs.

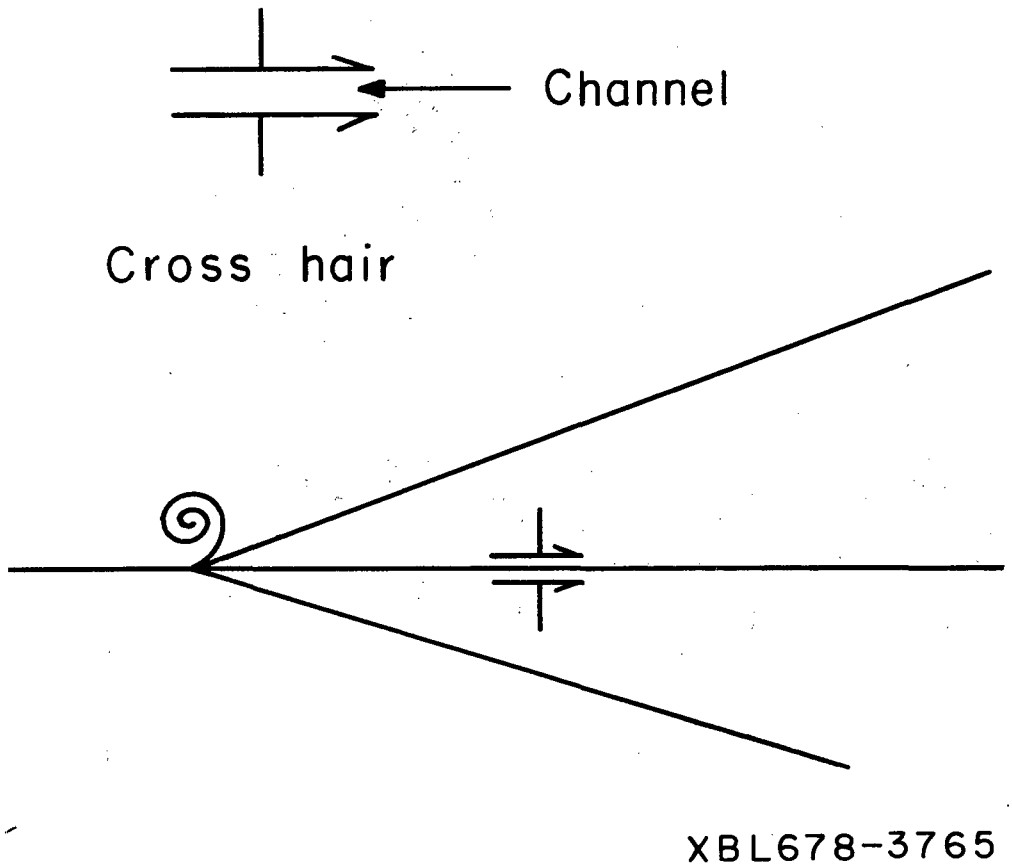

Fig. 23. Track following with the cross hair.

When the tracking servo is "on" the desired track is made to fall within the channel formed by the double lines of the cross hair and kept parallel to these lines by means of a "steering wheel" which turns the cross hair. The stage can be moved forward or backward with respect to the double lines by means of a foot pedal. The tracking servo keeps the track within the channel by moving the stage at right angles to the double lines as necessary. Using the tracking servo is analogous to driving a car down a road, the cross hair representing the car and the tracks the road.

Obviously if the tracking servo is to keep the tracks between the dual lines of the cross hair, the cross hair must be able to see the track. The "seeing" is done by the detecting head. The detecting head consists of a disk with 24 radial slits through which light may pass. This disk spins at 3600 rpm. The region of the film under the cross hair is projected through an aperture to the disk. As a disk slit passes the aperture, a sheet of light passes through to a photomultiplier. See Fig. 24.

The output of the photomultiplier is proportional to the light reaching it at any particular instant. The photomultiplier essentially

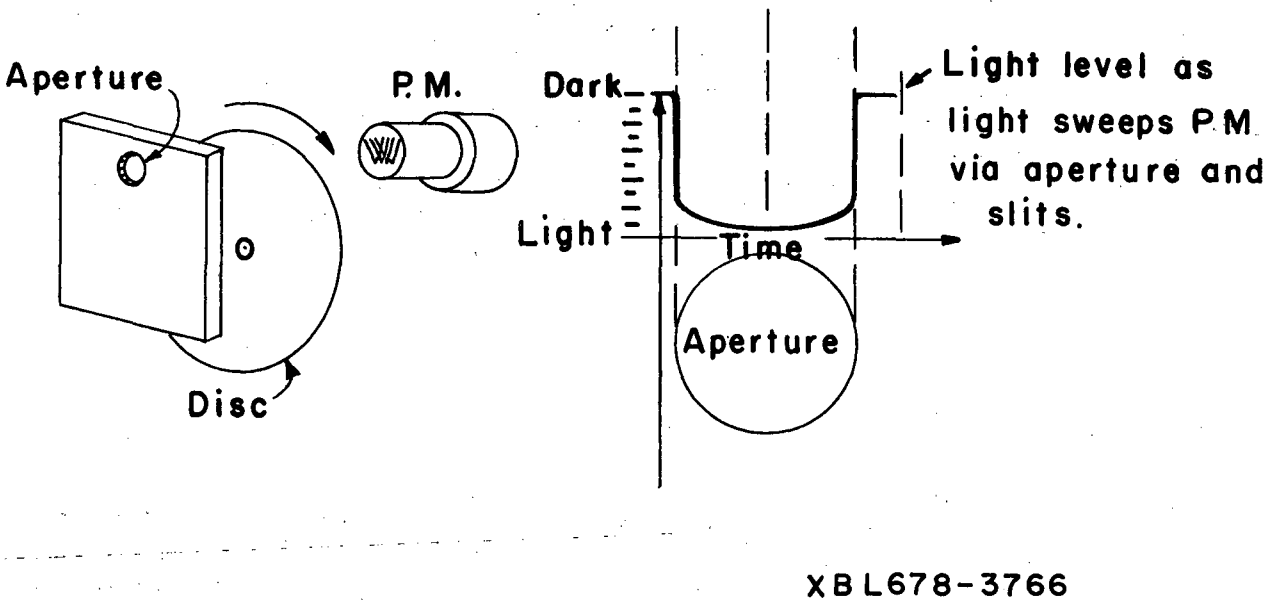

Fig. 24. Representation of action of detecting head.

changes light to electric current. The wave form due to the slit's passing the aperture is called a bucket. When a track is projected on the aperture parallel to the slit, the light that passes through the slit, as it crosses the track, decreases.

The detecting head is built so the angle at which the slit passes the aperture can be varied. The cross hair is coupled to the detecting head and points in the direction in which the slit falls across the aperture.

The amount of light a track can keep from passing through the slit depends on how much the track can cover the slit as the slit passes it. A track which is at right angles to the slit does not block enough light to be seen. Actually only tracks that are within a few degrees of being parallel to the slit are seen by the photomultiplier.

A separate PM (photomultiplier) tube and lamp in the detecting head put out a pulse called a marker. This marker is relative, in time, to the center of the bucket. This provides a reference by which the servo judges when the track falls within the cross hair, which represents the center of the aperture and bucket. The bucket and marker are sent into

an electronic system called the "time discriminator" or simply "TD." The TD compares a track in the bucket to the marker and puts out an error signal of magnitude proportional to the distance of the track from the marker or center of the bucket. The polarity of the error signal is determined by which side of the marker the track falls on. If the track and marker are coincident in time, the error is zero volts. One provision of the TD is variable time sensitivity. This means that the further a track is from the center of the bucket, the wider the area in the bucket that is considered in forming an error. As a track is detected and the time discriminator responds to the track the area under consideration narrows. This discriminates against other tracks that may be nearby. The TD is generally set to be sensitive to a minimum track of 0.5 V amplitude.

Sine pots

The sine pots (potentiometers designed to give a sine-wave output) distribute the two signals between the servo preamplifiers in such a way that the foot pedal moves the stage parallel to the cross hair and the TD at right angles to the cross hair. The TD moves the stage so the track approaches the cross hair until it centers and cancels the error. When the angle of the cross hair is other than 0, 90, 180, or 270 deg, the sine pots send various proportions of TD and foot-pedal signals to both X and Y servo preamplifiers as required. See Fig. 25.

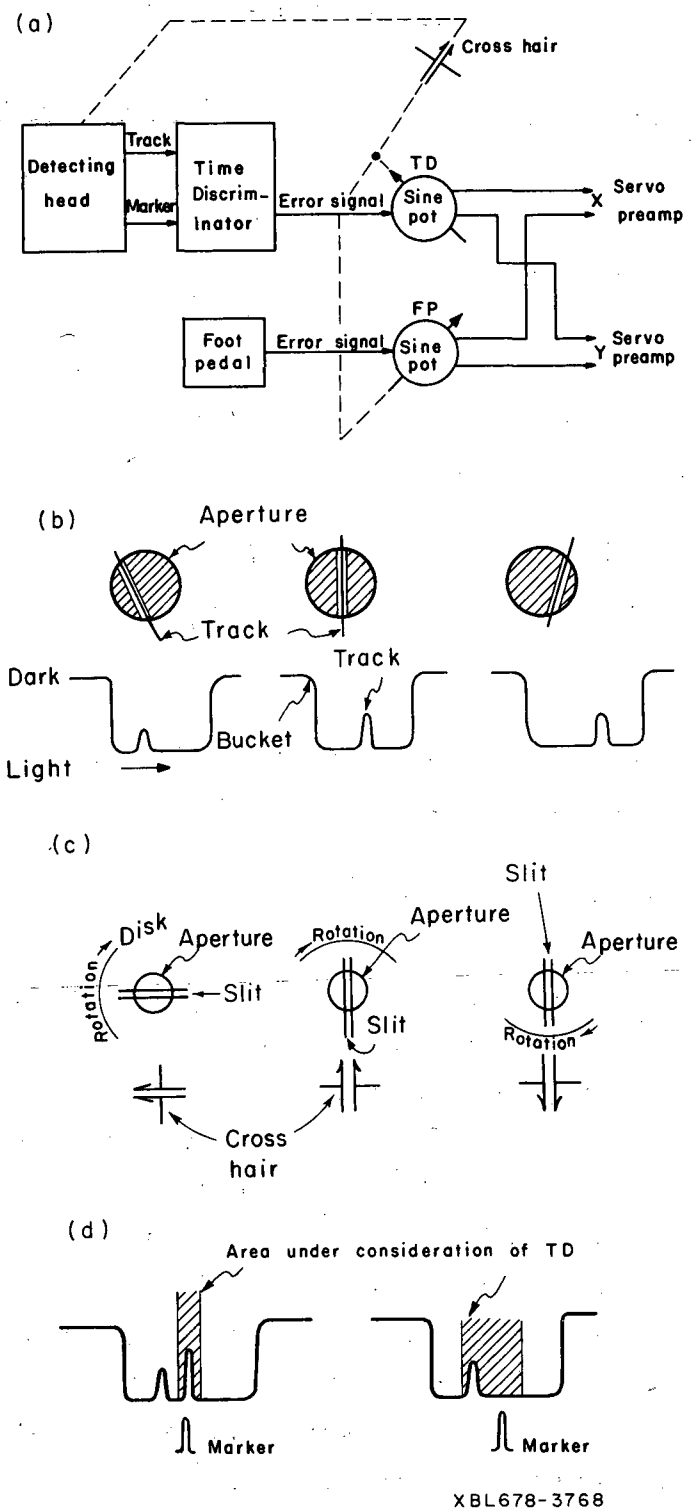

Fig. 25. Tracking servo. Note that the time discriminator sine pot is 90 deg out of phase with the cross hair and the foot-pedal sine pot.

Servo System Troubleshooting

Condition	Probable reason and solution
1. Drift [servo on]	A, B, C, D, R
2. Drift [servo off]	D, E, F
3. Stage runs into limits	D, H, G
4. Poor tracking	A, K, M, N, D, J, P
5. No tracking	J, M, N, U
6. Poor control of stage	D, R
7. Doesn't return to vertex	H, S, T
8. Doesn't go to zone	H, S
9. Doesn't go to fiducial	H, S
10. Stage won't move	3, G

A. TD unbalanced; pull final TD board to eliminate
B. Foot pedal unbalanced; disconnect foot pedal to eliminate
C. Servo preamp unbalanced; balance servo preamp
D. Faulty tachometer; check with scope
E. Faulty synchro; substitute a good one
F. Bocci ball misadjusted; pull integrators to eliminate
G. Blown driver transistor; replace transistor
H. Auto stage faulty; troubleshoot auto stage
J. No marker pulse; display scope won't trigger
K. PM voltage too high; buckets are saturated
M. Poor film; light tracks or dark background
N. TD not functioning; check with scope
P. Drag or bind in stage; turn stage manually to feel
R. Servo preamps misadjusted; square the loops
S. Misadjustment; make proper adjustments
T. Memory pot cable broken; replace cable
U. No PM high voltage; troubleshoot high voltage circuit and supply

Squaring the Loops

Squaring the loops is the means by which the servo amplifier response is adjusted.

A 5-Hz square wave is used to drive the stage, and the tach output is monitored with a scope to see how the stage reacts.

Procedure

1. Remove the signal cable from the joystick and connect it to the special cable from the 5-Hz generator.
2. Tape back the joystick to release the handwheels.
3. The tachs can be monitored at the summing preamps (board 7 for X axis, and board 13 for Y axis).
4. Adjust the 5-Hz input for a few volts swing of the tach output.

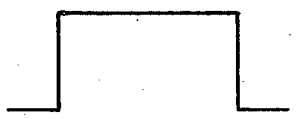

Input 5 Hz

5. The gains of X and Y axes are made equal. Increase the gain until oscillations are seen on the tach output (board 4 for X axis, board 16 for Y axis).
6. Adjust the feedback control to reduce the oscillations to an overshoot of the leading edge of the tach signal, with a couple cycles of ringing.

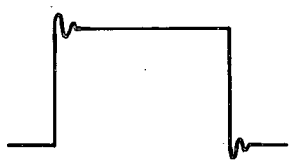

Ideal tachometer signal

7. Restored to normal, the stage should respond positively to the joystick if loops are properly squared.
8. As a final adjustment, the velocities of the "X" and "Y" axis should be checked by monitoring the Ferrantis. If velocities are different, slow down faster axis by turning up gain of tach feedback input pot on the summing amplifier.

VII. AUTOMATIC STAGE POSITIONING - Gordon S. Stutrud

A time-saving provision on MP II C and MP II D is the automatic stage-positioning device. This device moves the stage to each fiducial to be measured, and to the zone of the vertex to be measured, and returns the stage to the vertex each time a track has been measured. A precision potentiometer is coupled to each axis servo motor. These are called the shaft pots. For each fiducial to be measured there is a partial resistance-bridge circuit that is completed when a relay connects the shaft pot to the proper partial bridge. Each bridge is preset to be balanced by the shaft pot when the stage is over the proper fiducial. When the bridge is unbalanced, an error signal is developed which moves the stage in the direction that will cause the shaft pot to balance it. The fiducial counter keeps track of the fiducials and picks the proper relay for each successive fiducial. The automatic zone mode works much the same as autofiducials. Zone information is taken from a punched IBM card pertaining to a particular event to be measured. This information causes a relay to be picked which chooses a value of resistance that forms a bridge with the shaft pot. The bridge will balance when the stage is over the correct zone. These devices save the operator from guessing at or hunting for proper fiducials or events to be measured. An event may have several tracks emerging from a vertex. The third automatic stage-positioning mode provides a means of returning the stage to the origin of a track (vertex) when the measurement of that track is completed. When measurements of all tracks for a vertex have been completed, a pb marked "vertex complete" is pressed and the stage moves to the zone of the next vertex. This third mode utilizes a potentiometer which connects to the servomotor shaft through a clutch. This is called the memory pot; one is used for each axis. When a track is measured, the memory pot is engaged to the shaft and a cable winds around a pulley on the pot shaft. When the "track complete" pb is pressed, the clutch is released and a spring pulls the cable off the pulley, bringing the memory pot to its initial zero position. In this mode the memory pot forms a bridge with the shaft pot. This bridge is balanced at the vertex. As the track is measured both pots turn and keep the bridge balanced. When the memory pot cable zeroes the pot an unbalance occurs, causing the error signal that moves the stage and shaft pot toward a null. The null occurs over the vertex. Electronic logic and various relays control the automatic stage-positioning device, cutting in the proper mode. See diagrams 7V9845, 8V2255, and 7V8443 for more detail.

VIII. SEQUENCE LOGIC - Luis J. Garcia

What follows here pertains only to MP II C and MP II D. These measuring machines use a card reader as the means of obtaining the input data of the events to be measured (MP II A and MP II B have the input data supplied by the operators). The sequence logic cycles machine operation in a predetermined sequence; operates several display units which indicate the number of vertices in the event, the number of the vertex being measured, the measurement number, and the view number; and controls the servo positioning logic for the stage (which automatically positions the stage near the vertex or fiducial to be measured). See Fig. 25 for a block diagram of sequence logic.

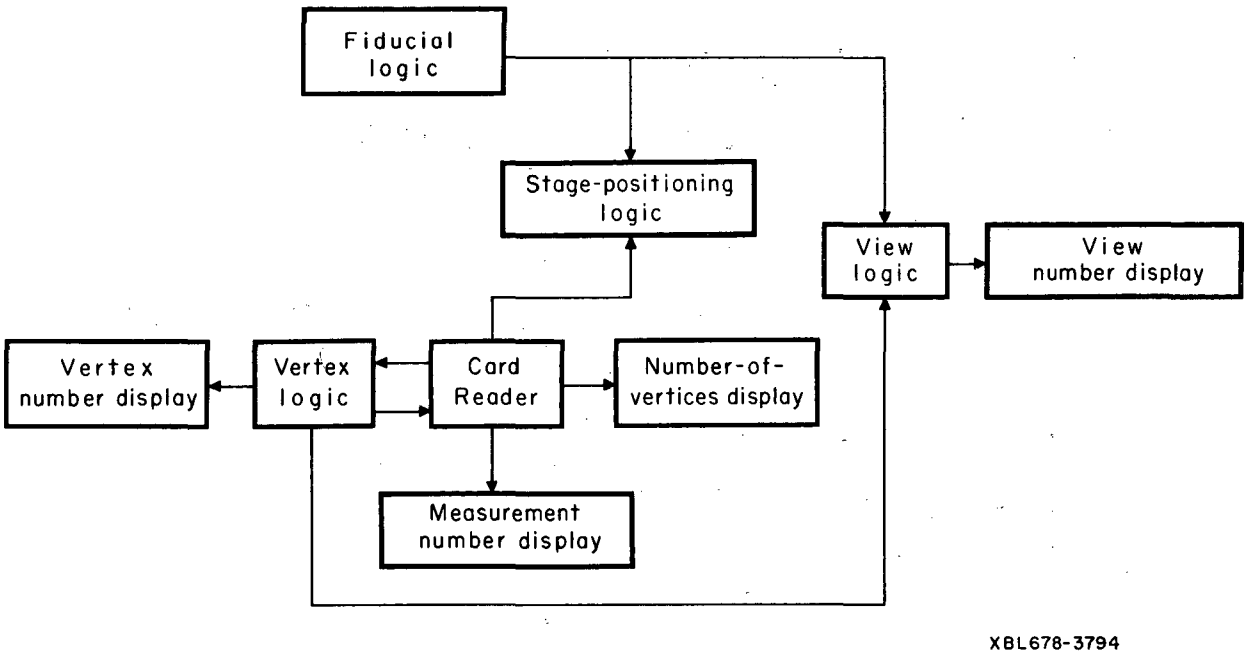

Fig. 26. Sequence logic.

The sequence begins when the operator places a card in the reader, finds the frame of the event, and presses the ID button. Then the stage automatically drives to the zone of the first fiducial. Nine fiducials are measured in the following sequence:

Fiducial number:	1	2	3	4	5	6	7	8	9
View number:	2	3	1	2	3	1	2	3	1

At the end of the fiducial measurements, the operator presses the "track complete" button and the stage drives to the zone of the first vertex. Next the vertices are measured in the same view sequence (i.e., view 2, view 3, view 1) as the fiducials. When the operator presses the "event complete" button all the vertices have been measured and the cycle is ended.

The sequence logic can be regarded in small sections each of which has a block diagram. The function of each section is stated and a brief explanation, if necessary, is given. For further detail of circuit operation refer to diagram 7V984.

The function of the logic on Fig. 27 is to generate the following signals: an enable for the BCD converter, a reset for the fiducial counter, and the fiducial trigger. The enable signal allows the BCD converter to pick up the appropriate fiducial relays. These relays are part of the servo

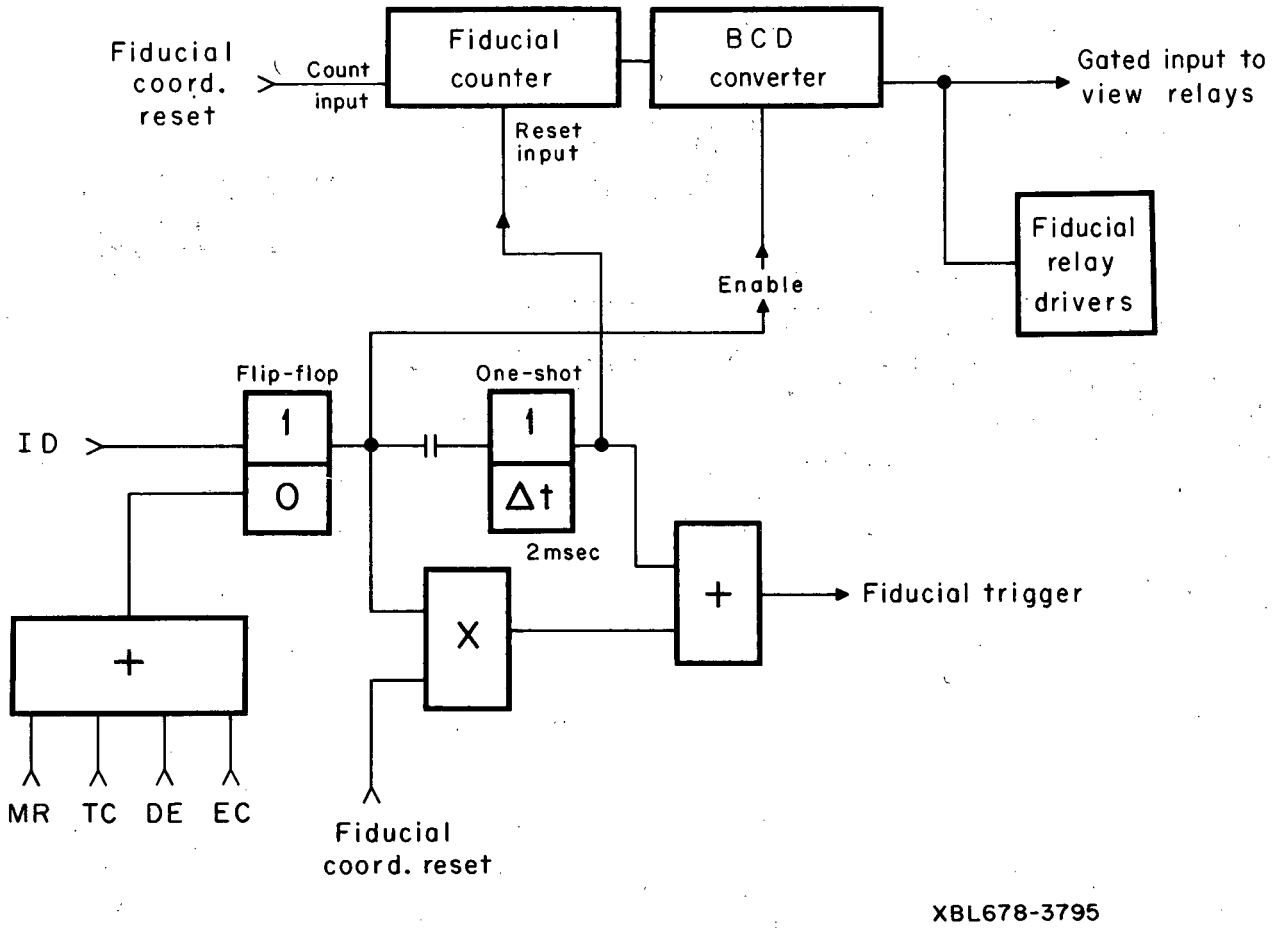

Fig. 27. Sequence logic enable logic. MR = main reset; TC = track complete; DE = delete event; EC = event complete.

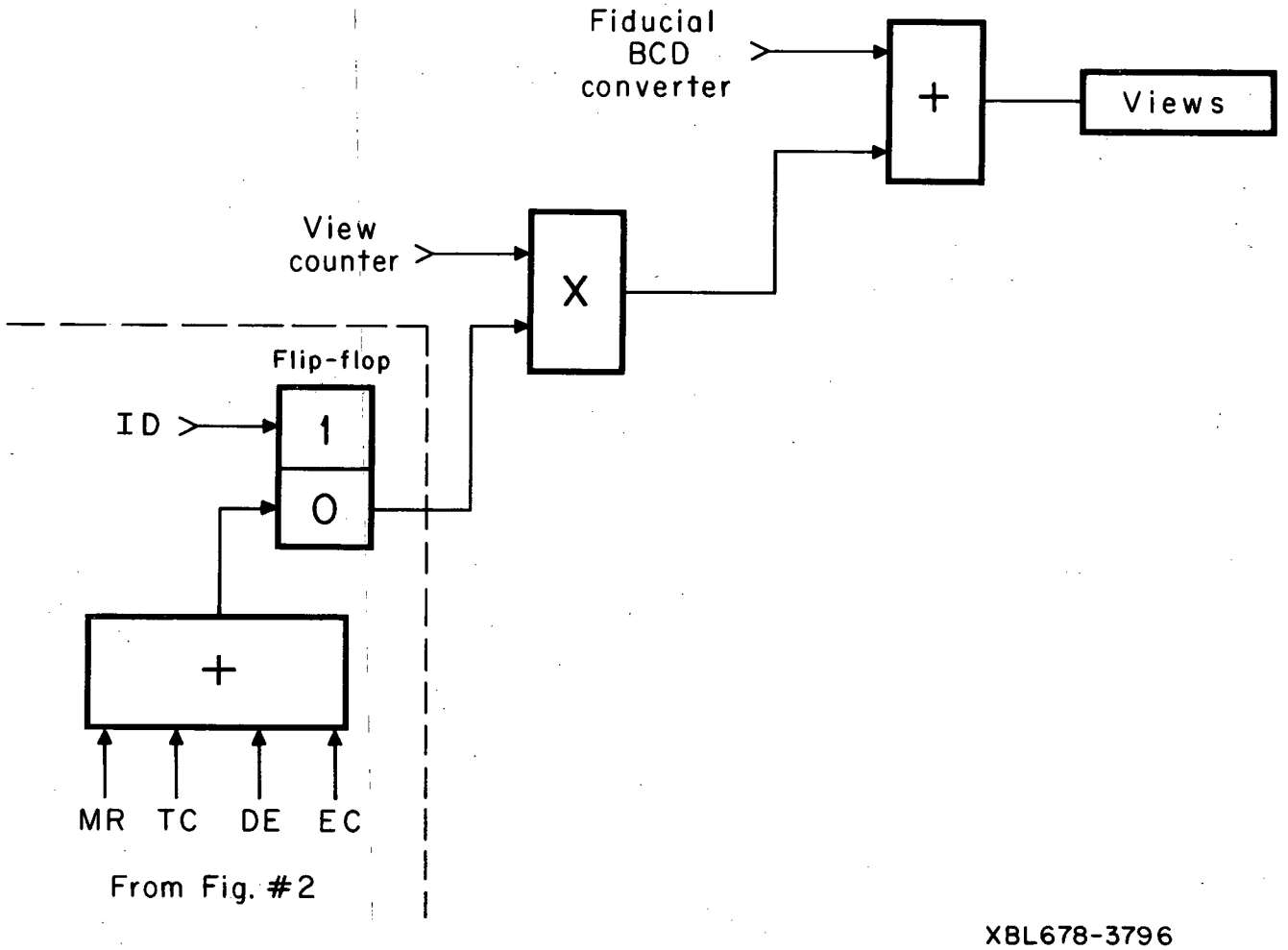

Fig. 28. Fiducial view-change circuit. MR = main reset; TC = track complete; DE = delete event; EC = event complete.

automatic positioning logic. The reset signal resets the fiducial counter to "1". The fiducial trigger signal is used in the stage-positioning timer. This timer is also used in the servo automatic positioning logic. The "fiducial coordinate reset" signal is generated each time a fiducial is measured. This signal advances the fiducial counter and generates a fiducial trigger.

The logic on Fig. 28 selects the input that cycles the view counter.

The function of the logic on Fig. 29 is to cycle the views. Indicative data reset the view counter to "2". After the set of vertices has been measured in a view, the "view change" signal is generated. This signal advances the view counter. The counter, reaching "0," triggers the one-shot, which resets the counter to "2". At the end of the event measurement, the "fiducial return' function allows the operator to check Ferranti count accuracy. The logic on Fig. 30 places the stage in automatic mode in order to allow the operation of the servo positioning logic. The stage remains in automatic until it has nearly stopped. The three inputs that can place the stage in "automatic" are "fiducial trigger," which is generated at ID time and each time the fiducial button is pressed; "vertex trigger," which is generated at "track complete" (TC) time; and "zone trigger," which is generated at "vertex complete" time unless the "stage hold" button is on. The "any count" signal is generated by an "or" function of "X" or "Y" in "add" or "subtract" pulses from the Ferranti

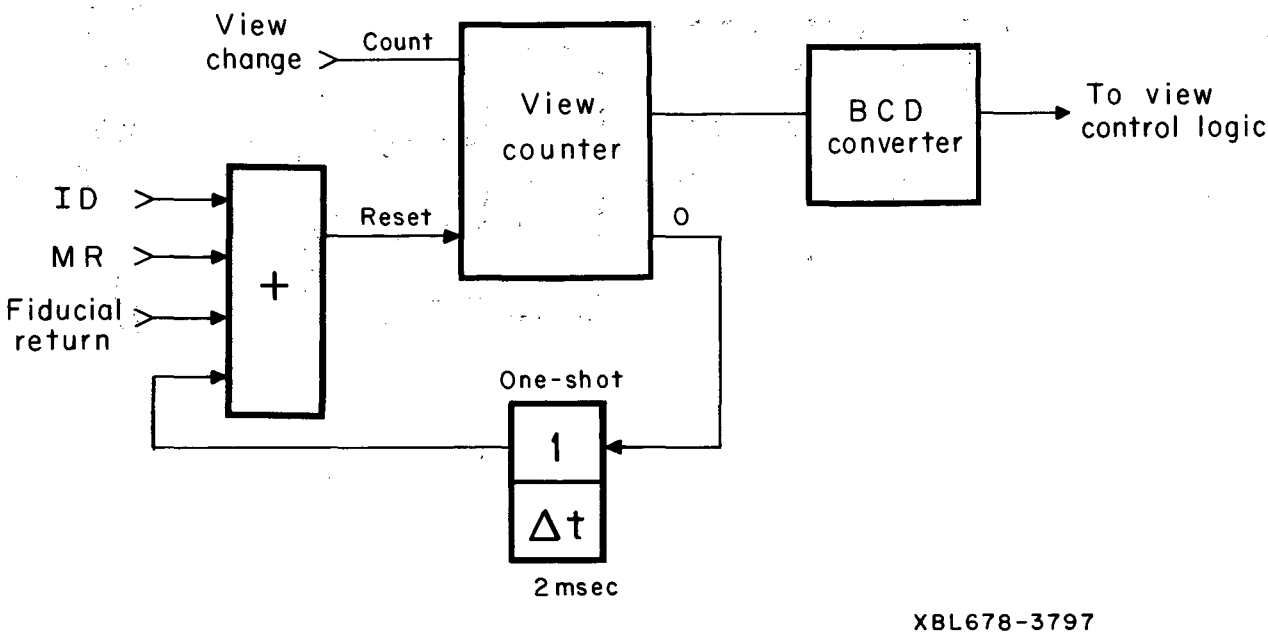

Fig. 29. Measurement view-change logic.

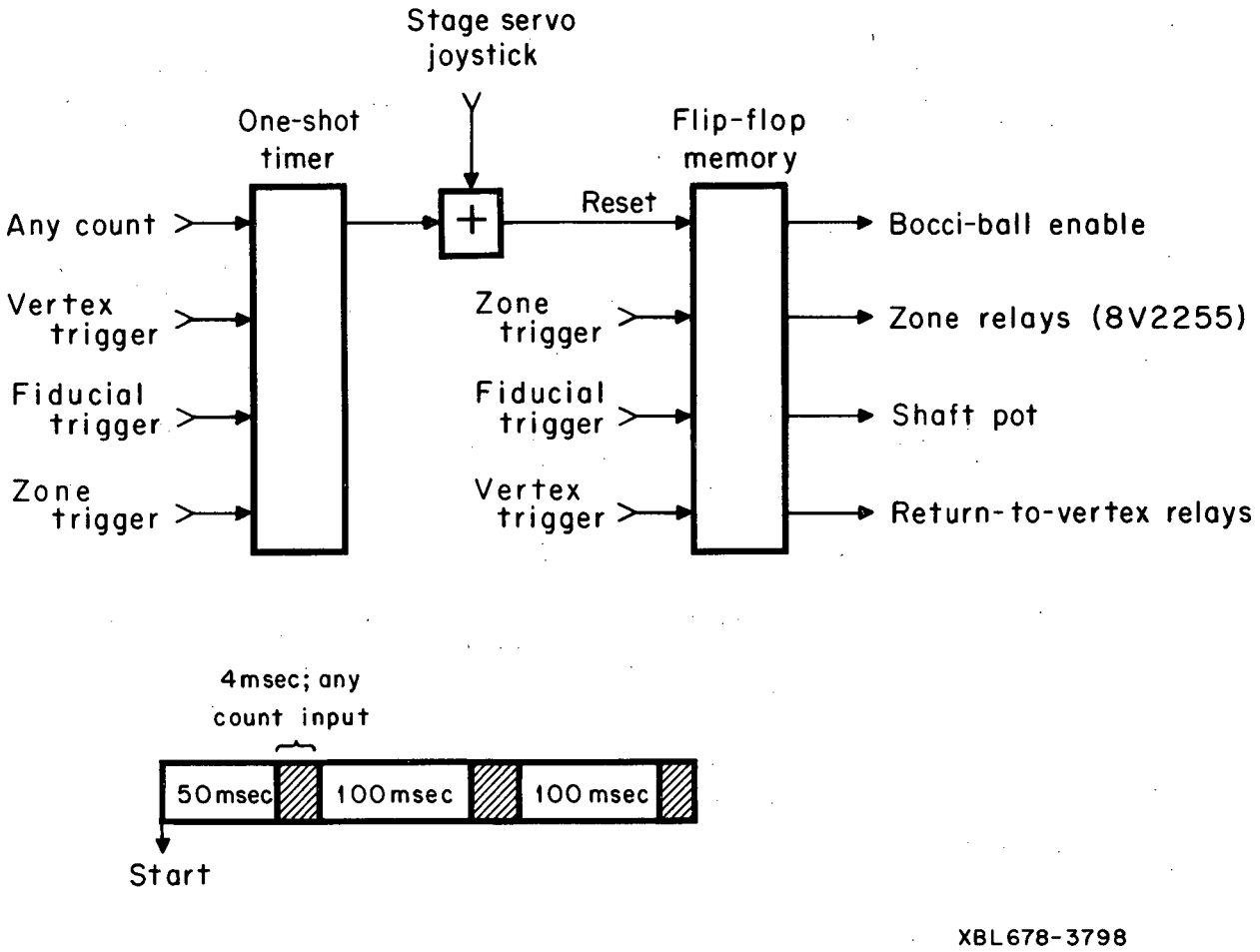

Fig. 30. Circuit for automatic mode.

direction logic. The "any count" signal cycles the one-shot timer until the signal rate is less than 250 Hz. The joystick input resets the flip-flop memory. This allows the operator to take the stage out of automatic mode by moving the joystick. The function of the logic on Fig. 31 is to energize the clutches, which in turn cause the memory pots (potentiometers) to become mechanically coupled to the stage.

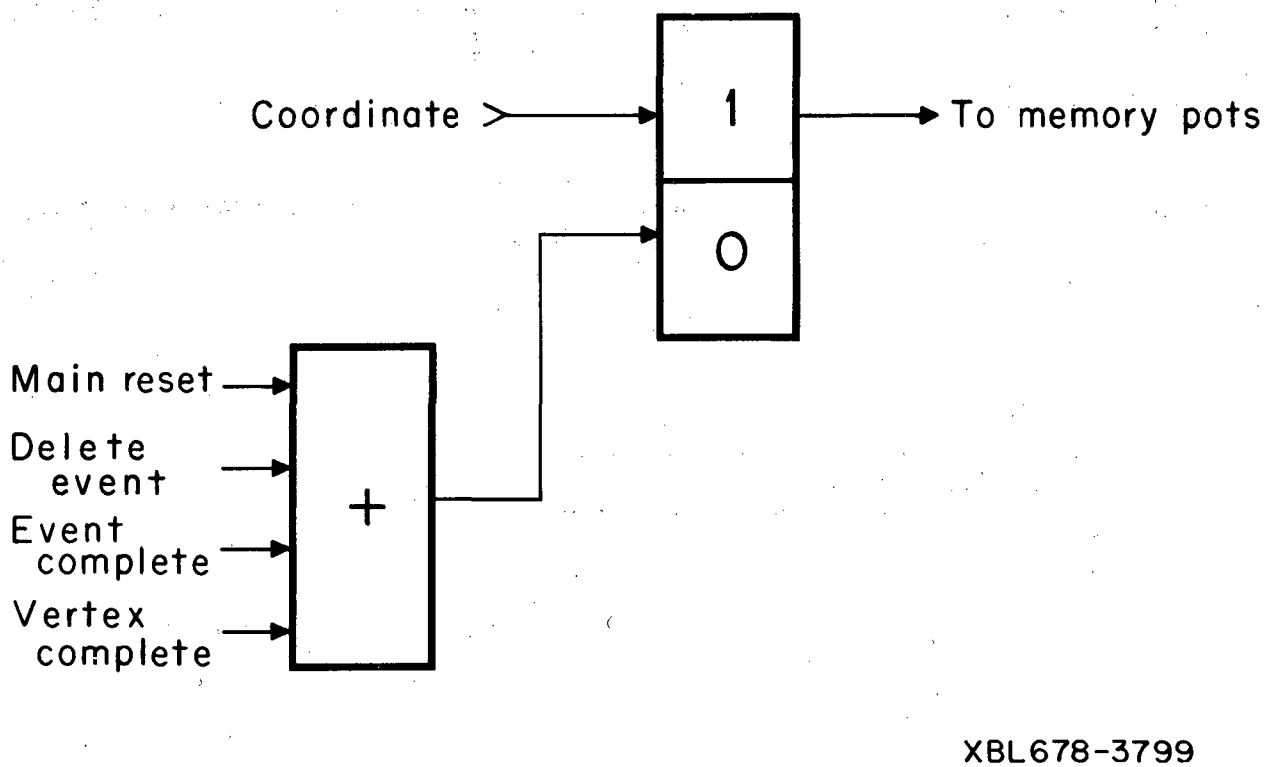

Fig. 31. Return-to-vertex logic.

Figure 32 shows the method used in generating both "X" and "Y" error signals, which are fed to the stage servo. Each circuit consists basically of a bridge which has no output across it when balanced. The shaft pots are permanently coupled to the stage. These pots, in conjunction with the zone resistors, form the bridge which enables the stage to drive to the proper zone. The function of the memory pots is to return the stage to the vertex zone at TC time. The wipers of the pots are held at their center of travel by a spring-loaded device. Further circuit detail may be obtained from the diagrams 7V8443 and 8V2255.

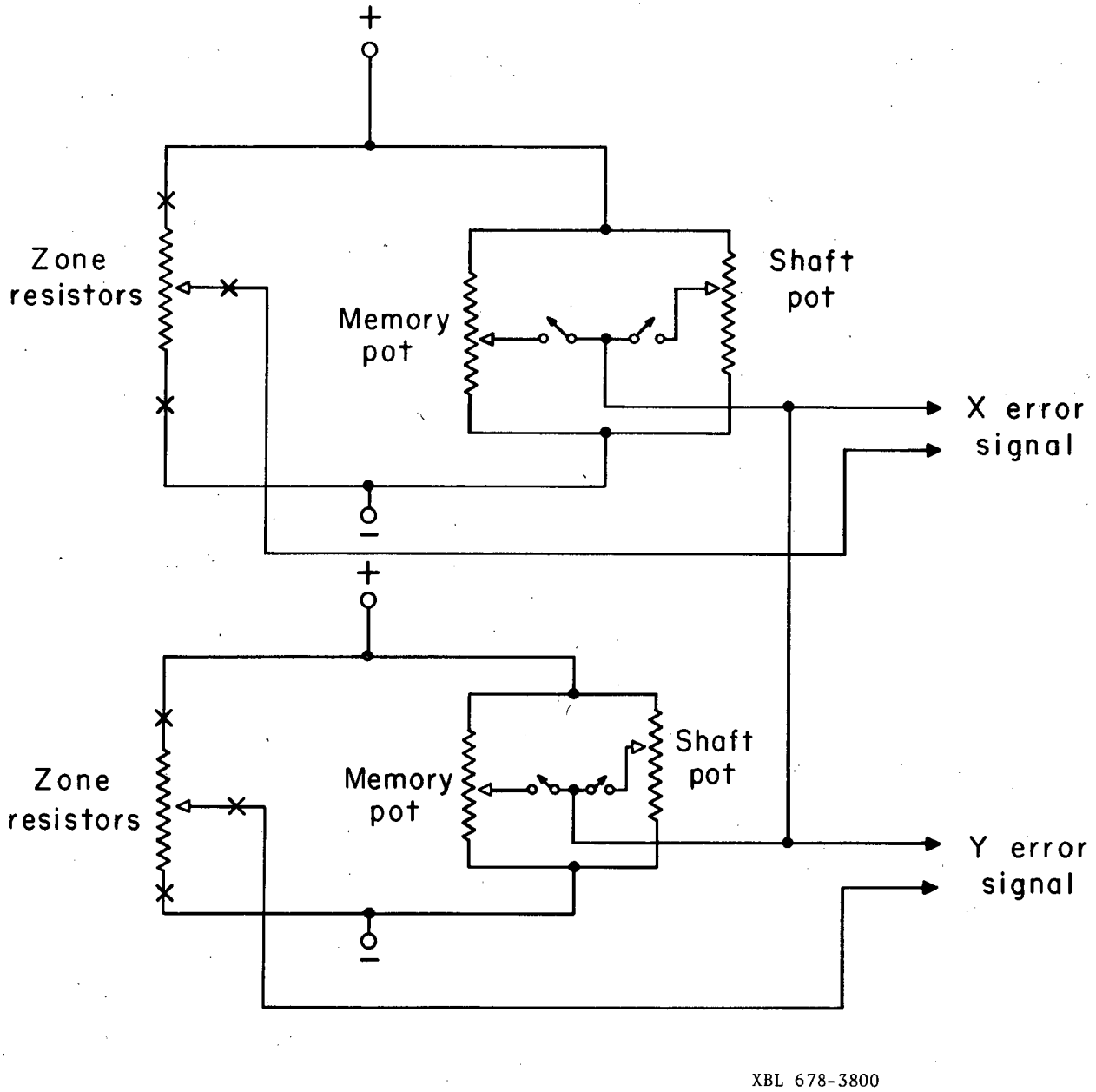

Fig. 32. Bridge circuit used for the error signals into the servo system.

The logic of Fig. 33 enables the "vertex complete" function. This function enables the "vertex complete" function. This function enables the "event complete" function on the last vertex of view 1, and also pulses the vertex "up" and "down" counters.

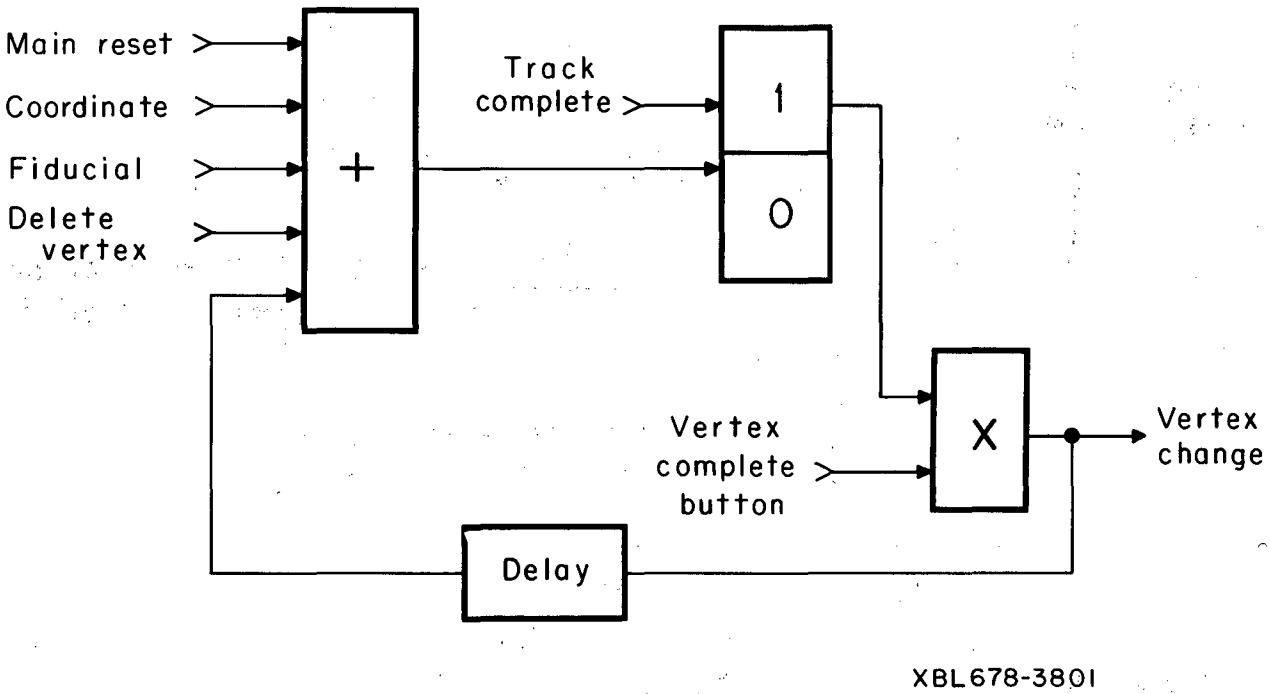

Fig. 33. Logic for "vertex complete" function.

The logic of Fig. 34 counts and displays the number of vertices measured; generates the "fiducial return" and "event complete" enable signals, which occur on the last vertex; and energizes the card reader columns that correspond to the zone numbers of the vertices to be measured. ID strobes the number of vertices into the "down" counter and results the "up" counter to "1". All the vertices of the event are first measured in View 2. As the "down" counter reaches zero it generates a signal which resets the "up" counter and strobes the input of the "down" counter, after which the vertices are measured in Views 3 and 1 in a similar manner.

The logic of Fig. 35 generates a "delete event" signal if the card reader is opened before event-complete time.

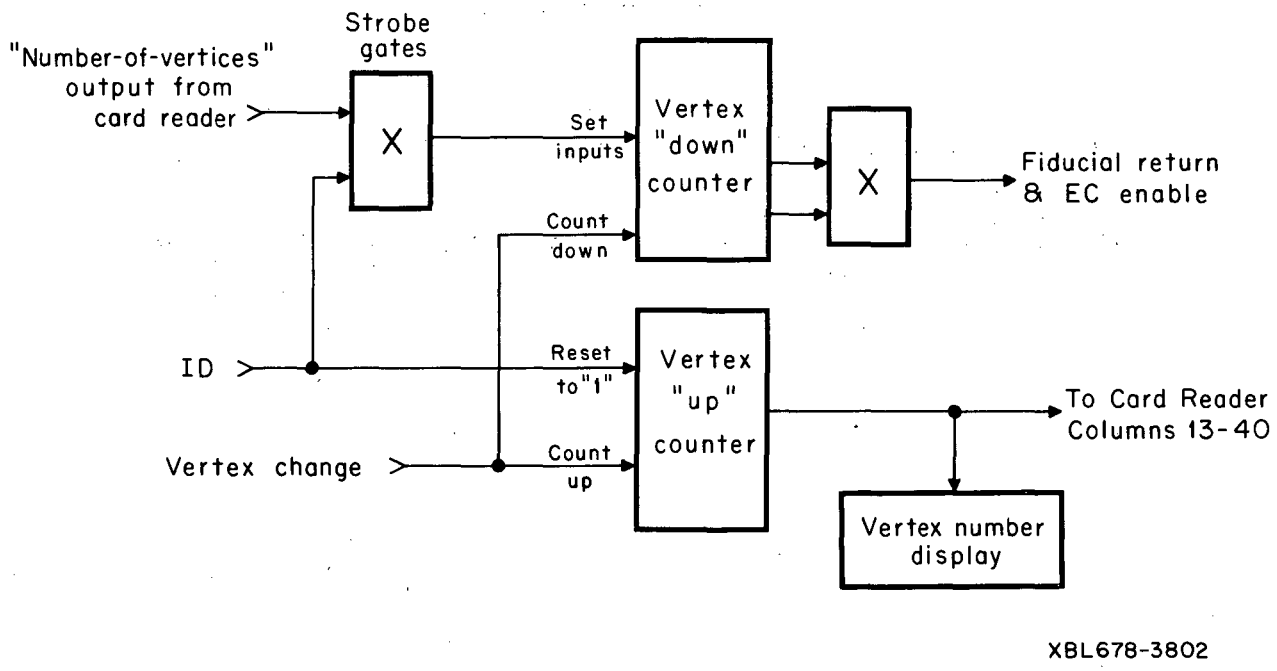

Fig. 34. Vertex measurement logic.

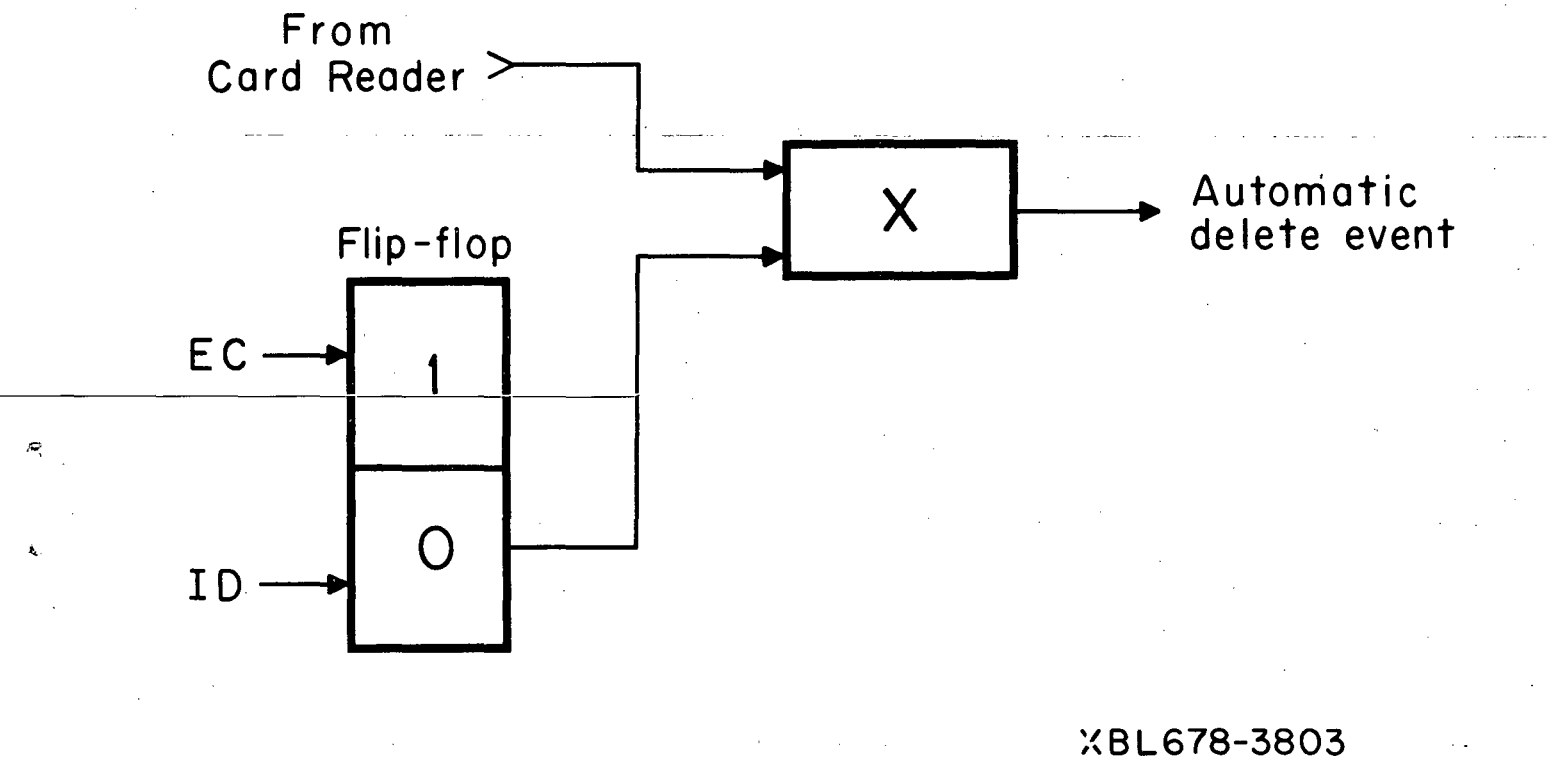

Fig. 35. Automatic "delete event" logic.

REFERENCES

1. Kennedy Company, Incremental Digital Magnetic Recorder Model 1400, Operation and Maintenance Instructions.

2. Ferranti Moiré Fringe Digital Measuring Systems, Ferranti Ltd., Edinburgh, Scotland.

This report was prepared as an account of Government sponsored work. Neither the United States, nor the Commission, nor any person acting on behalf of the Commission:

A. Makes any warranty or representation, expressed or implied, with respect to the accuracy, completeness, or usefulness of the information contained in this report, or that the use of any information, apparatus, method, or process disclosed in this report may not infringe privately owned rights; or

B. Assumes any liabilities with respect to the use of, or for damages resulting from the use of any information, apparatus, method, or process disclosed in this report.

As used in the above, "person acting on behalf of the Commission" includes any employee or contractor of the Commission, or employee of such contractor, to the extent that such employee or contractor of the Commission, or employee of such contractor prepares, disseminates, or provides access to, any information pursuant to his employment or contract with the Commission, or his employment with such contractor.