UCRL-17632

cy. 2

# University of California

# Ernest O. Lawrence Radiation Laboratory

GERMANIUM FET — A NOVEL ELEMENT FOR LOW-NOISE PREAMPLIFIERS

E. Elad and M. Nakamura

June 5, 1967

RECEIVED
LAWRENCE
RADIATION LABORATORY

JUL 31 1967

LIBRARY AND
DOCUMENTS SECTION

Berkeley, California

UCRL-17632
cy. 2

## DISCLAIMER

This document was prepared as an account of work sponsored by the United States Government. While this document is believed to contain correct information, neither the United States Government nor any agency thereof, nor the Regents of the University of California, nor any of their employees, makes any warranty, express or implied, or assumes any legal responsibility for the accuracy, completeness, or usefulness of any information, apparatus, product, or process disclosed, or represents that its use would not infringe privately owned rights. Reference herein to any specific commercial product, process, or service by its trade name, trademark, manufacturer, or otherwise, does not necessarily constitute or imply its endorsement, recommendation, or favoring by the United States Government or any agency thereof, or the Regents of the University of California. The views and opinions of authors expressed herein do not necessarily state or reflect those of the United States Government or any agency thereof or the Regents of the University of California.

Submitted to Nucl. Instr. and Methods
Letter to the Editor

UCRL-17632
Preprint

UNIVERSITY OF CALIFORNIA

Lawrence Radiation Laboratory
Berkeley, California

AEC Contract No. W-7405-eng-48

# GERMANIUM FET — A NOVEL ELEMENT FOR LOW-NOISE PREAMPLIFIERS

E. Elad and M. Nakamura

June 5, 1967

# GERMANIUM FET — A NOVEL ELEMENT FOR LOW-NOISE PREAMPLIFIERS

E. Elad and M. Nakamura

Lawrence Radiation Laboratory
University of California
Berkeley, California

June 5, 1967

## ABSTRACT

A preamplifier based on germanium FET's and having 0.3 keV resolution is described.

# GERMANIUM FET — A NOVEL ELEMENT FOR LOW-NOISE PREAMPLIFIERS*

E. Elad and M. Nakamura

Lawrence Radiation Laboratory
University of California
Berkeley, California

June 5, 1967

The inherent low noise of the junction field-effect transistor (JFET) made it a very desirable active element for the input stage of high-resolution preamplifiers. A number of preamplifier circuits using JFET's have been published.[1-4] All these circuits used silicon JFET's, the most recent ones utilizing well-optimized devices having high $g_m/C_g$.

In this letter a low-noise preamplifier based on germanium JFET's is described. Pulse generator resolution of the preamplifier for zero external capacitance is 0.3 keV FWHM (Ge) with a slope of 0.018 keV/pF. Typical resolution obtained with a silicon detector for low-energy x rays is less than 0.4 keV.

The advantages of the germanium FET over its silicon counterpart are closely related to the properties of the two materials at cryogenic temperatures. Germanium has inherently higher mobility than silicon, a property that persists down to liquid helium temperatures. Also, due to lower ionization energies of impurities in germanium, the density of free carriers in this material at low temperatures is higher than that in silicon. These two factors, mobility and density of free carriers, combine in germanium FET's to give high transconductance ($g_m$) at very low temperatures.

It is well known that the main noise source of JFET's is the thermal noise of the channel. It could have been expected, therefore, that lowering the temperature would result in reduced noise of the device. Also, other noise sources, such as leakage currents and parasitic source and drain resistances, decrease with temperature.

The preamplifier described employs germanium JFET's operated at 4.2°K to obtain their high-grain, low-noise characteristics. The input stage, shown in Fig. 1, consists of two p-channel JFET's type TIX301 or TIXM12 in cascode. Voltage-sensitive configuration is used and dc coupling between the detector and the input stage is employed, as these offer high signal-to-noise ratio.[4] The $I_d$ - $V_d$ characteristics of the JFET TIX301 at liquid helium temperature are given in Fig. 2. The transconductance at zero gate bias is 25 000 μohms, increasing by a factor of 2.5 from 300°K to 4.2°K. The optimum $g_m$ of the JFET is around 4°K for low-pinch-off devices and below this temperature for high-pinch-off ones. The input resistance at 4.2°K is in the region of $10^{10}$ to $10^{11}$ ohms, and the input capacitance is approximately 20 pF at $V_{ds}$ = -2.5 V and $V_{gs}$ = 0. Both transistors of the input stage are operated with approximately 2.5 V between drain and source because of the low breakdown voltage of the TIX301 (TIXM12)--20 V at 300°K and only 12 to 14 V at 4.2°K. This low $V_{ds}$ voltage prevents a large component of avalanche-type noise, but is also partially responsible for the high input capacitance of the device. Excluding the input stage, the rest of the preamplifier is a conventional type of amplifier using bipolar transistors, which has been described elsewhere.[4]

Pulse generator resolution of the preamplifier for zero external capacitance is 0.3 keV FWHM (Ge) with a slope of 0.018 keV/pF. No special selection of the JFET's (product of Texas Instruments) is needed to achieve these results. The very low sensitivity to external capacitance (of the detector) is a result of the relatively high input capacitance of the FET's, which on the other hand prevents the achievement of higher signal-to-noise ratio.

The preamplifier described was used with a low-capacitance (2 pF) LRL-Berkeley-type lithium-drifted silicon detector. The detector was operated at 110°K in vacuum of $5\times10^{-7}$ mm Hg and with bias voltage of 1000 V. The details of detector mounting and its isolation from ground are described elsewhere.[5] The pulse-shaping time constants of the main amplifier were 5 μsec integration and differentiation.

The preamplifier assembly was checked for actual resolution with x rays of $^{55}$Mn and $^{241}$Am. The pulse-height analyzer spectra are shown in Figs. 3 and 4. The $K_\alpha$ and $K_\beta$ lines of $^{55}$Mn (Fig. 3), only 0.6 keV apart, are resolved and measured with 0.37 keV resolution. The spectrum of $^{241}$Am (Fig. 4) shows the fine structure of this source; some of the very weak lines ($L_\eta$, $L_{\beta_6}$, $L_{\gamma_4}$) are resolved from the background noise. The $L_\alpha$ line ($L_{\alpha_1}$ = 13.96 keV, $L_{\alpha_2}$ = 13.78 keV) was measured with 0.42 keV resolution and the $L_{\gamma_1}$ and $L_{\gamma_6}$ lines (0.68 keV apart) were resolved. The $L_{\beta_1}$ and $L_{\beta_2}$ lines (0.81 keV apart), previously barely resolved,[4] now show a 2:1 peak-to-valley ratio.

Spectra resolutions obtained with a silicon detector and the Ge

JFET preamplifier are superior to those obtained with optimized silicon JFET preamplifiers. Further improvements are expected with the technological progress in fabrication of germanium FET's. The use of the described preamplifier in conjunction with lithium-drifted germanium detectors, as well as operation of these detectors below 77°K, is currently being investigated.

Concluding, we can say that the germanium junction FET has proved to be a very-low-noise device when operated at liquid helium temperature. We believe the same is true for other low-energy gap materials, especially the high-mobility materials such as InSb, which may serve as the basis for future low-noise devices.

The authors would like to acknowledge the technical assistance of W. L. Crowder.

## REFERENCES

*This work was done under the auspices of the U. S. Atomic Energy Commission.

1. V. Radeka, Brookhaven National Laboratory Report BNL-6953, 1963, (unpublished).
2. T. W. Nybakken and V. Vali, Nucl. Instr. and Meth. 32 (1965), 121.
3. E. Elad, Nucl. Instr. and Meth. 37 (1965), 327.
4. E. Elad and M. Nakamura, IEEE Tran. Nucl. Sci. 14, No. 1. (Feb. 1967), p. 523, 13th Nuclear Science Symposium, Boston, Massachusetts, 1966.
5. E. Elad and M. Nakamura, Nucl. Instr. and Meth. 41 (1966), 161.

## FIGURE CAPTIONS

Fig. 1. The input stage of the preamplifier.

Fig. 2. $I_d$ - $V_d$ characteristic of TIX301 at 4.2°K. Vertical scale 2mA/cm, horizontal scale 1V/cm, gate voltage (as a parameter) 0.2V/step.

Fig. 3. Spectrum of $^{55}$Mn x-rays. Energy in keV.

Fig. 4. Spectrum of $^{241}$Am x-rays. Energy in keV.

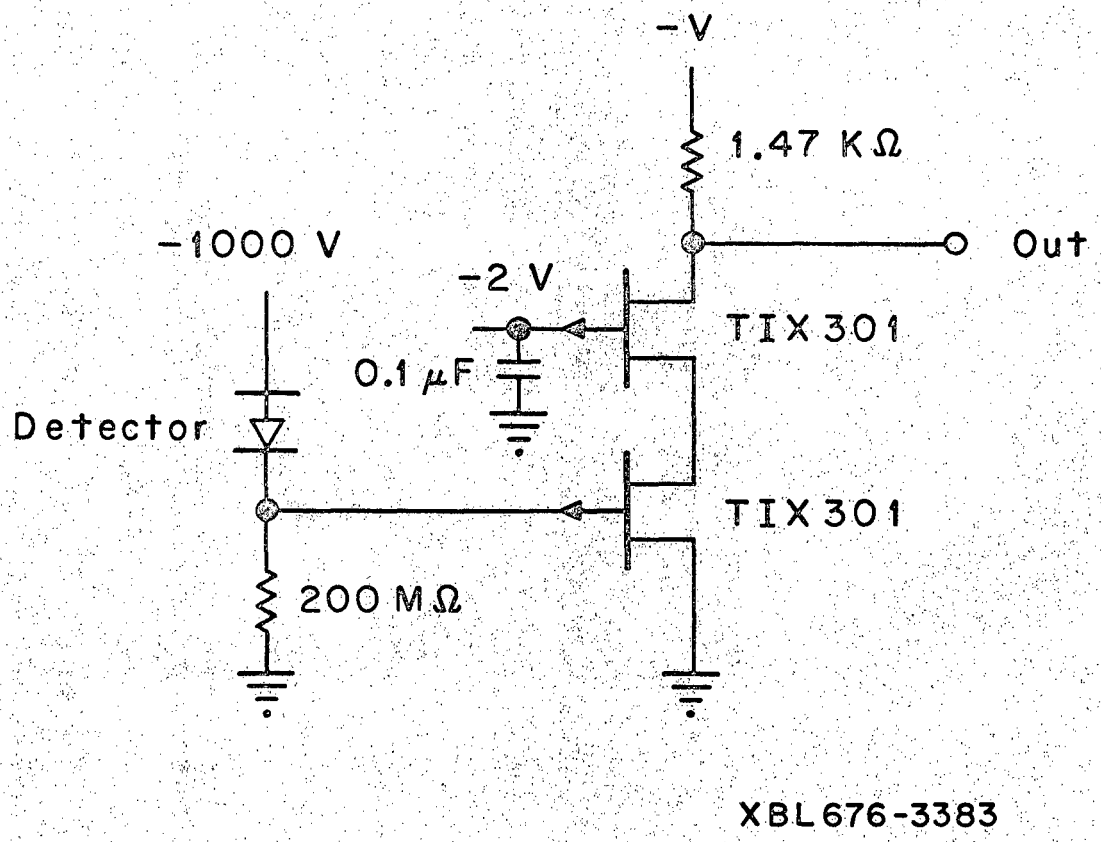
-V
1.47 KΩ
Out
-1000 V
-2 V
TIX 301
0.1 μF
Detector
TIX 301
200 MΩ
XBL676-3383

Fig. 1

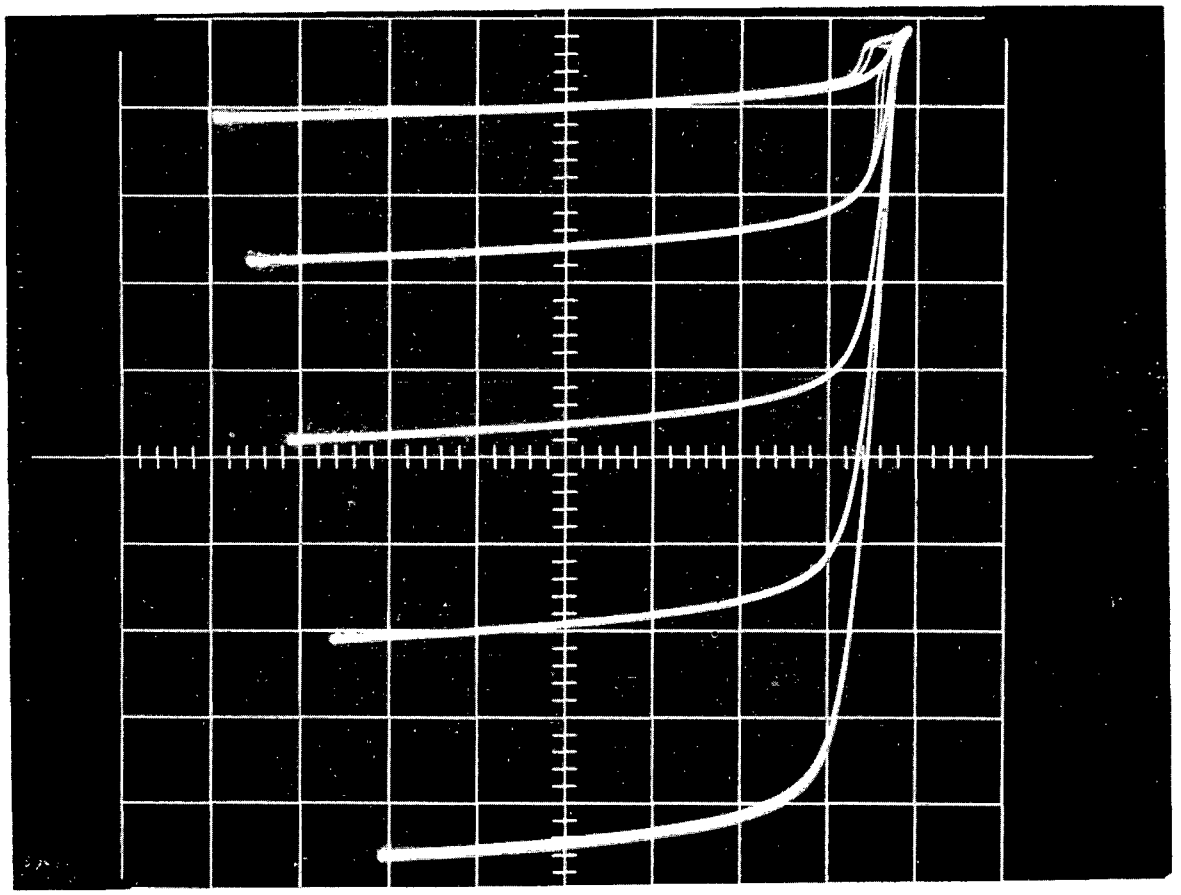

XBB 676-3437

Fig. 2

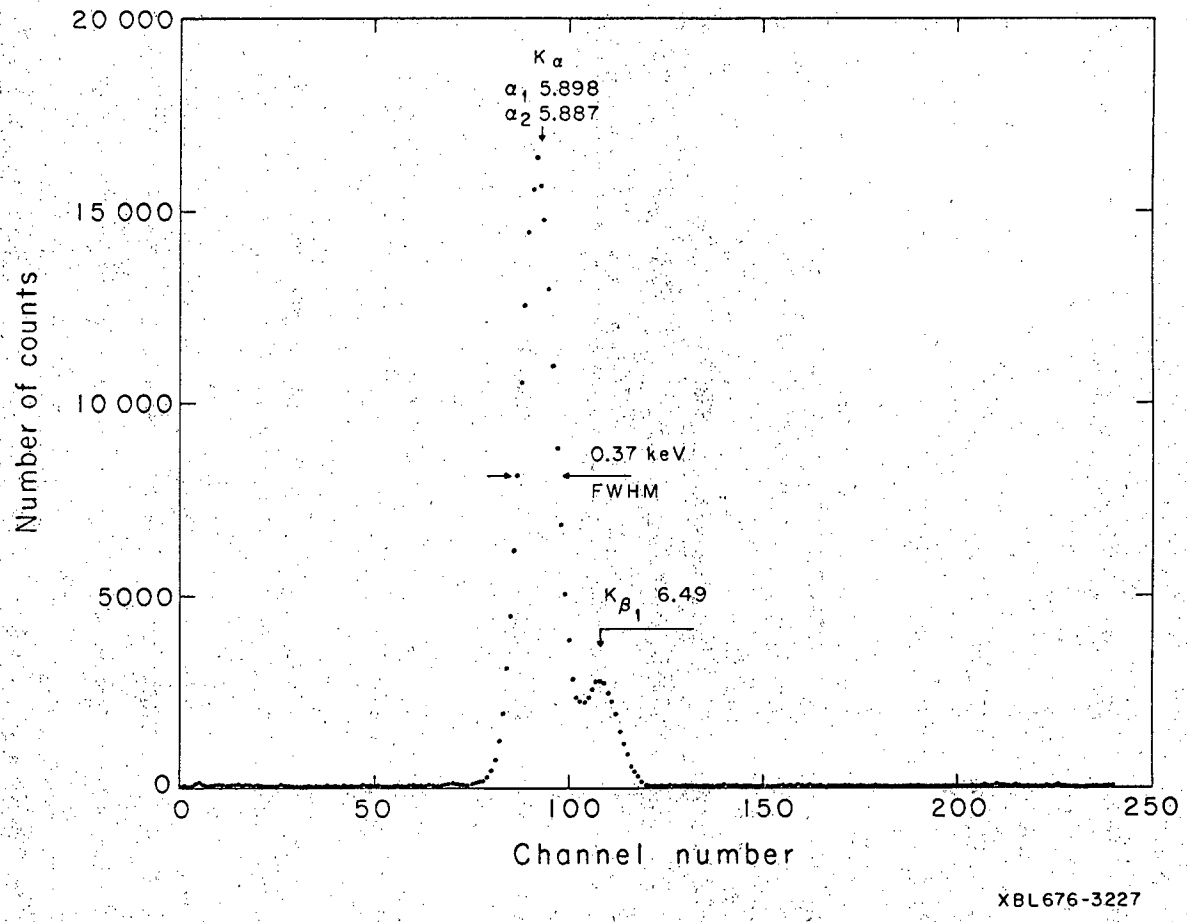
20 000
15 000
10 000
5000
0
Number of counts
Kα
α1 5.898
α2 5.887
0.37 keV
FWHM
Kβ1 6.49
0
50
100
150
200
250
Channel number
XBL676-3227

Fig. 3

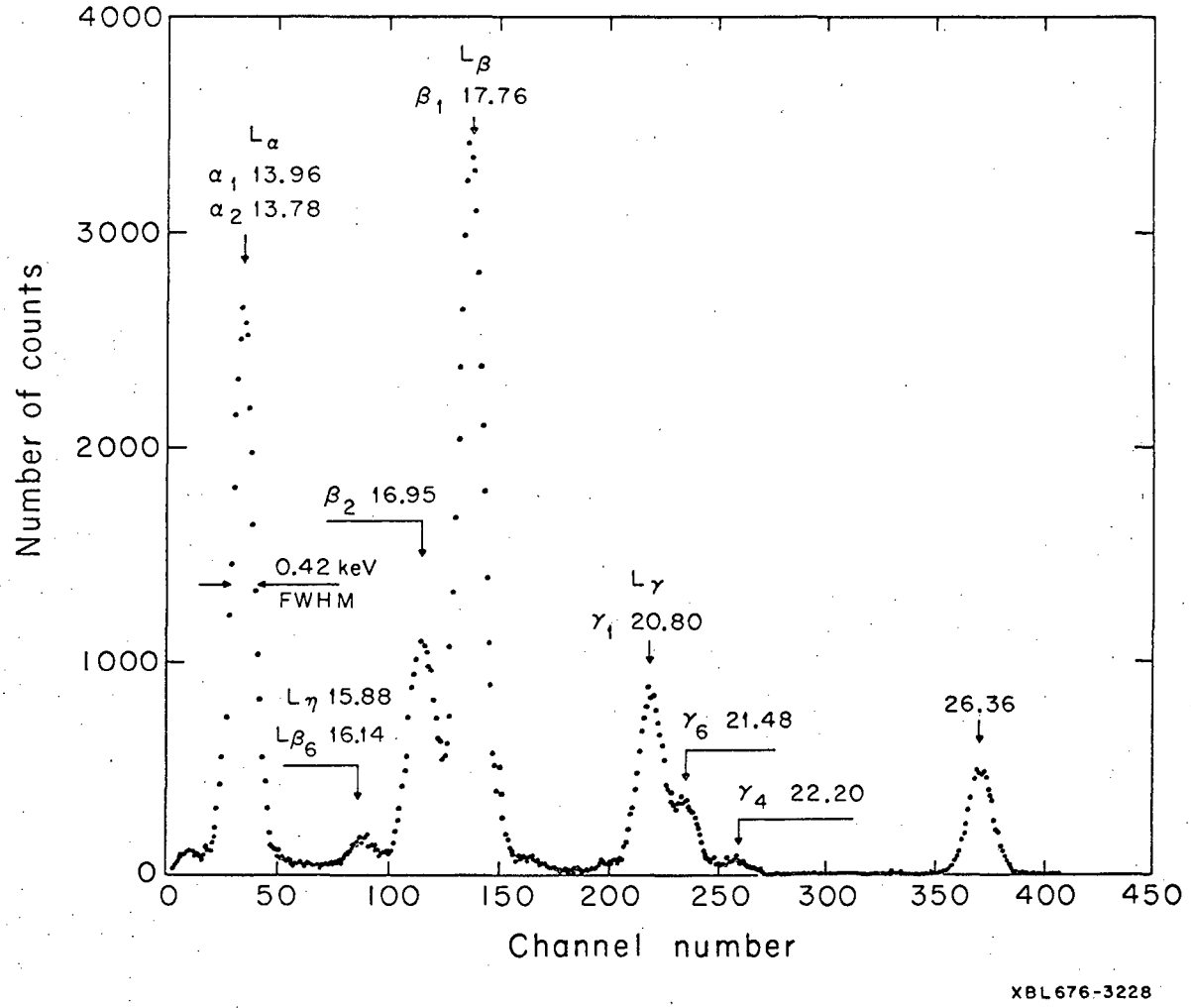
4000
3000
2000
1000
0
Number of counts
0
50
100
150
200
250
300
350
400
450
Channel number
$L_\alpha$
$\alpha_1$ 13.96
$\alpha_2$ 13.78
$L_\beta$
$\beta_1$ 17.76
$\beta_2$ 16.95
0.42 keV
FWHM
$L_\eta$ 15.88
$L\beta_6$ 16.14
$L_\gamma$
$\gamma_1$ 20.80
$\gamma_6$ 21.48
$\gamma_4$ 22.20
26.36
XBL676-3228

Fig. 4

This report was prepared as an account of Government sponsored work. Neither the United States, nor the Commission, nor any person acting on behalf of the Commission:

A. Makes any warranty or representation, expressed or implied, with respect to the accuracy, completeness, or usefulness of the information contained in this report, or that the use of any information, apparatus, method, or process disclosed in this report may not infringe privately owned rights; or

B. Assumes any liabilities with respect to the use of, or for damages resulting from the use of any information, apparatus, method, or process disclosed in this report.

As used in the above, "person acting on behalf of the Commission" includes any employee or contractor of the Commission, or employee of such contractor, to the extent that such employee or contractor of the Commission, or employee of such contractor prepares, disseminates, or provides access to, any information pursuant to his employment or contract with the Commission, or his employment with such contractor.