UCRL-17669

cy. I

University of California

Ernest O. Lawrence Radiation Laboratory

HIGH PRECISION MEASUREMENT OF
PROTON-PROTON POLARIZATION BETWEEN 10 AND 20 MeV

R. J. Slobodrian, J. S. C. McKee, H. Bichsel, and W. F. Tivol

July 1967

TWO-WEEK LOAN COPY

This is a Library Circulating Copy which may be borrowed for two weeks. For a personal retention copy, call Tech. Info. Division, Ext. 5545

UCRL-17669

cy. I

DISCLAIMER

This document was prepared as an account of work sponsored by the United States Government. While this document is believed to contain correct information, neither the United States Government nor any agency thereof, nor the Regents of the University of California, nor any of their employees, makes any warranty, express or implied, or assumes any legal responsibility for the accuracy, completeness, or usefulness of any information, apparatus, product, or process disclosed, or represents that its use would not infringe privately owned rights. Reference herein to any specific commercial product, process, or service by its trade name, trademark, manufacturer, or otherwise, does not necessarily constitute or imply its endorsement, recommendation, or favoring by the United States Government or any agency thereof, or the Regents of the University of California. The views and opinions of authors expressed herein do not necessarily state or reflect those of the United States Government or any agency thereof or the Regents of the University of California.

Submitted to Physical Review Letters

UCRL-17669
Preprint

UNIVERSITY OF CALIFORNIA

Lawrence Radiation Laboratory
Berkeley, California

AEC Contract No. W-7405-eng-48

HIGH PRECISION MEASUREMENT OF PROTON-PROTON POLARIZATION BETWEEN 10 AND 20 MeV

R. J. Slobodrian, J. S. C. McKee, H. Bichsel, and W. F. Tivol

July 1967

HIGH PRECISION MEASUREMENT OF PROTON-PROTON POLARIZATION BETWEEN 10 AND 20 MeV*

R. J. Slobodrian, J. S. C. McKee,† H. Bichsel,‡ and W. F. Tivol

Lawrence Radiation Laboratory
University of California
Berkeley, California

July 1967

ABSTRACT

The p-p polarization asymmetry has been measured at 9.6, 15.6, and 19.7 MeV laboratory energy with accuracy down to ±0.003. The interpretation of our results requires a significant spin-orbit term in the interaction.

- - - - - - - - - - - -

There are few measurements of polarization in p-p scattering below 30 MeV. The measurement of Alexeff and Haeberli[1] at 3.3 MeV resulted in small positive values. However Knecht et al[2] have concluded that there is no way to reproduce such values with any combination of S, P and D phase shifts, and hence that they must be in error. There is also a measurement at 16.2 MeV[3] at 50.2° CM that produced a value 0.006±0.007, and another at 17.5 MeV[4] at 45° CM with a value 0.0125±0.02. Clearly both experiments were not inconsistent with a very small polarization (positive or negative).

High precision measurements at about 45° CM have been performed recently past in the region at and above 30 MeV.[5] The polarization is consistently positive and becomes zero at about 30 MeV. At low energies the polarization is an effect of higher order with respect to the spin correlation parameters.[6] Most recent efforts have dealt with measurements of the latter.[7] However, at 11.4 MeV the scattering is overwhelmingly singlet, and thus the spin correlation measurement ceases to yield useful information.

A high precision measurement of the polarization in the range between 10 and 20 MeV may be helpful to the numerous groups that have carried out analyses of nucleon-nucleon scattering below 30 MeV (Refs. 5 and 7 to 11 inclusive). We have measured the polarization asymmetry in proton-proton scattering at 9.6, 15.6, and 19.7 MeV, using the variable energy polarized beam facility of the Berkeley 88 in. cyclotron. The proton beam is produced with nearly 100% polarization by scattering of α particles from a liquid nitrogen cooled high pressure hydrogen target. The beam energy was determined by measuring its range in aluminum. The alignment of the beam was effected by first mapping it with a slit mounted on a remotely controlled ionization chamber, and subsequently orienting the scattering table on the beam line using a telescope. Thereby an alignment to $\pm 0.05^{\circ}$ is accomplished. A similar accuracy is obtained in the alignment of the detector collimators. A spin precession solenoid was used to reverse the spin of the proton beam. To restore the beam barycenter a magnet was used in conjunction with a split ionization chamber that was permanently monitoring the beam direction. In order to minimize and compensate possible effects due to the spin precession solenoid it was operated half the time precessing the spin clockwise, and half the time counterclockwise. Careful tests indicate that no asymmetry is produced by the spin precession solenoid. The hydrogen target was a cell with a continuous aluminum window 0.0019-in. thick, operated at about 3 atmospheres at room temperature. The gas was 99.99% pure. The detection was effected with two pairs of CsI(Tl) scintillator detector telescopes and associated electronics as shown in Fig. 1(a). At 20 MeV the ΔE crystals were 0.010-in. thick at forward angles and 0.005 in. near 45° in the laboratory system. At lower energies the spectra were very clean without the coincidence requirement of the telescopes and therefore the ΔE detectors were not used. The spectra were measured setting the detectors at symmetrical angles with

respect to the beam. Short runs were taken monitoring the total beam with a second ionization chamber, coupled to an electrometer integrating circuit and recycling unit. Our procedure has proven in empirical tests to provide asymmetries free of systematic errors down to about ±0.1%. Figure 1(b) shows the geometrical layout of the experiment.

The 20-MeV data seem to be consistent with the trend as a function of energy established by the recent measurements at 30 and 50 MeV[5] and the Harvard results.[12] The implications of our polarization results can be explored in terms of S, P and D waves. The reader is referred to Ref. 9 where the effect of including F waves is shown to be small at 23.6 MeV. Figure 2 summarizes our results (tabular values are available upon request).

In the light of our analysis we can state that the OPE assumption seems to be inadequate to account for the observed values of the polarization, and that a sizable amount of spin-orbit interaction is necessary to account for the observed node in the polarization. The addition of F waves may improve considerably the agreement with our data. However, it is not our purpose to compete with the many groups seeking a "final" answer to the nucleon-nucleon interaction problem. The P waves are certainly scanning the ill known "intermediate range" region and polarization effects, although small, seem to be a sensitive probe.

Footnotes and References

*This work was performed under the auspices of the U.S. Atomic Energy Commission.

†On leave from University of Birmingham, England.

‡On leave from University of Southern California.

1. I. Alexeff and W. Haeberli, Nucl. Phys. 15, 609 (1960).
2. D. J. Knecht, P. F. Dahl, and S. Messelt, Phys. Rev. 148, 1031 (1966).
3. W. A. Blanpied, Phys. Rev. 116, 738 (1959).
4. K. W. Brockman, Phys. Rev. 110, 168 (1958).
5. C. J. Batty, R. S. Gilmore, and G. H. Stafford, Nucl. Phys. 45, 481 (1963), and references therein.
6. J. Raynal, Nucl. Phys. 28, 220 (1961).
7. H. P. Noyes, P. Signell, N. R. Yoder, and R. M. Wright, SLAC-PUB-269 (February 1967, unpublished and to be published), and references therein.
8. G. Breit and R. D. Haracz, High Energy Physics, edited by E. H. Burhop (Academic Press, New York, 1967) and references therein.
9. S. I. Bile'kaya, Yu. M. Kazarinov, F. Lehar, and Z. Janout, J. Nucl. Phys. (USSR) 4, 635 (1967); Russian Ref. 4, 892 (1966).
10. R. A. Bryan and R. A. Arndt, Phys. Rev. 150, 1299 (1966).
11. R. A. Arndt and M. H. MacGregor, Phys. Rev. 154, 1549 (1967).
12. J. N. Palmieri, A. M. Cormack, N. F. Ramsey, and R. Wilson, Ann. Phys. 5, 299 (1958).

Figure captions.

Fig. 1. Schematic drawing of the electronics and geometrical layout of the experiment.

a) Block diagram of the electronics. CF: cathode follower, LA: linear amplifier, CC: double coincidence, LG: linear gate, T_i: detector telescope.

b) Schematic drawing of the experimental apparatus. IC: ionization chamber, T_i: detector telescopes, Q: quadrupole lens, S: spin precession solenoid, TM: tickling magnet (for the restoration of the beam barycenter)

Fig. 2. Summary of experimental polarization asymmetry. The "theoretical" curves were calculated with programs adapted for the CDC 6600 computer, with slight changes from the originals of D. J. Knecht[2].

a) Data at 9.6 MeV. The solid line corresponds to $^3P_0 = 3.71^\circ$, $^3P_1 = 1.71^\circ$, $^3P_2 = -2.29^\circ$, $^1D_2 = 0.20^\circ$. The dash-dot line corresponds to 2.75°, 1.25°, -1.75°, and 0.13° in the same order. The dashed line corresponds to 4.23°, -2.07°, 0.45° and 0.14°, it gives the pattern typical of OPE.

b) Data at 15.6 MeV. The solid line corresponds to $^3P_0 = 4.2^\circ$, $^3P_1 = 2.0^\circ$, $^3P_2 = -2.0^\circ$ and $^1D_2 = 0.3^\circ$.

c) Data at 19.7 MeV. The solid line corresponds to $^3P_1 = 7.73^\circ$, $^3P_1 = 4.23^\circ$, $^3P_2 = -2.77^\circ$, $^1D_2 = 1.19^\circ$. The dash-dot line corresponds to the phases 9.04°, -2.96°, 1.84° and 0.8°, consistent with OPE. The dashed line is obtained from the Dubna phases[9] up to and including the D wave.

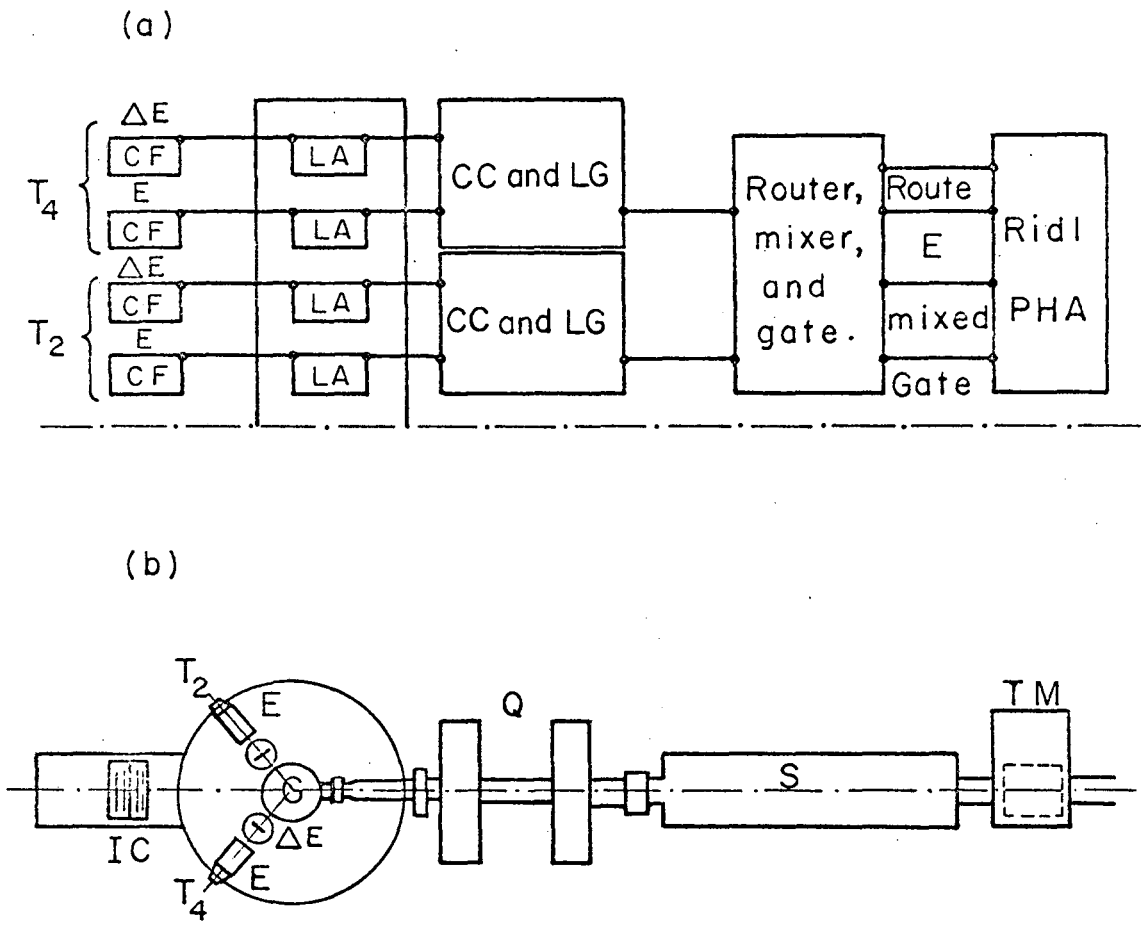

Fig. 1.

XBL677-3511

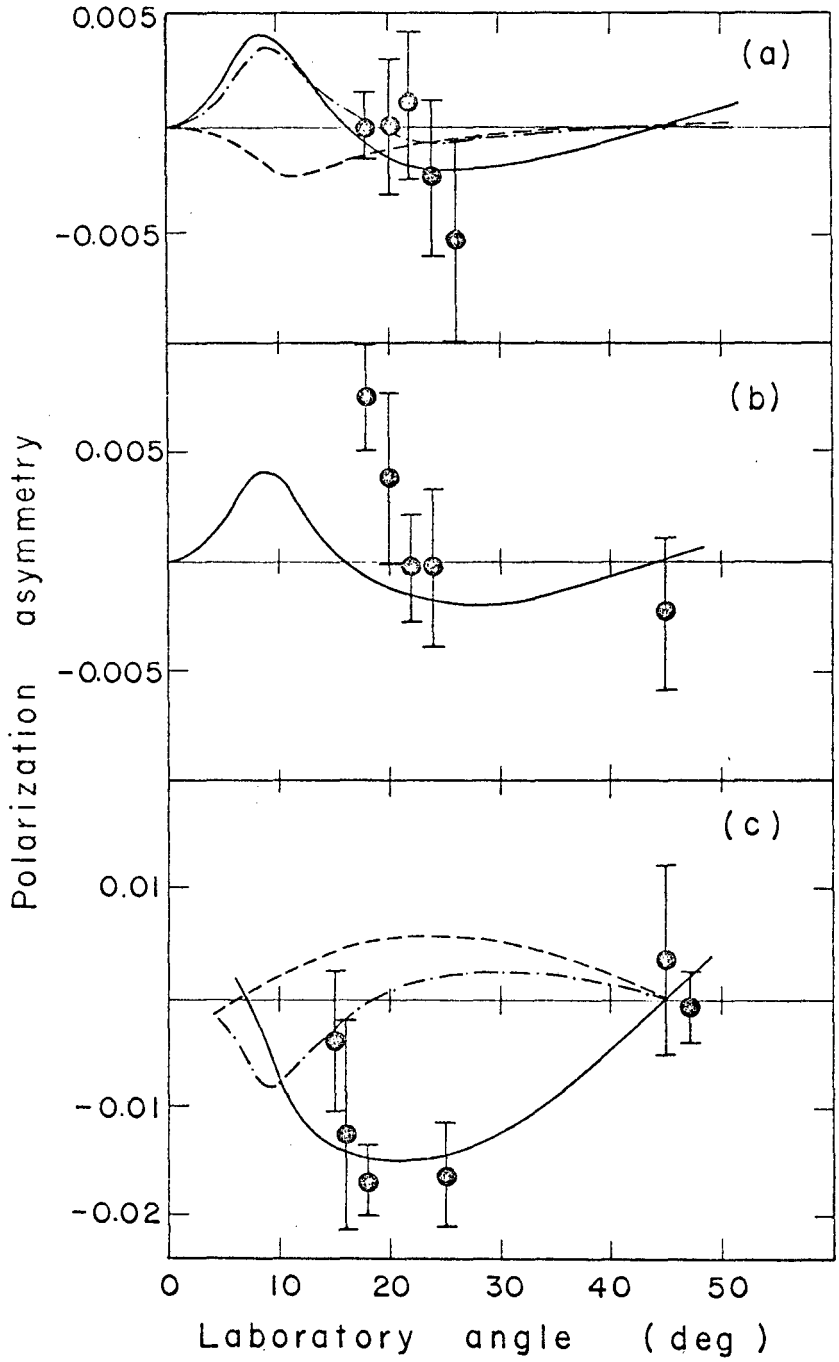

Fig. 2.

XBL677-3510

This report was prepared as an account of Government sponsored work. Neither the United States, nor the Commission, nor any person acting on behalf of the Commission:

A. Makes any warranty or representation, expressed or implied, with respect to the accuracy, completeness, or usefulness of the information contained in this report, or that the use of any information, apparatus, method, or process disclosed in this report may not infringe privately owned rights; or

B. Assumes any liabilities with respect to the use of, or for damages resulting from the use of any information, apparatus, method, or process disclosed in this report.

As used in the above, "person acting on behalf of the Commission" includes any employee or contractor of the Commission, or employee of such contractor, to the extent that such employee or contractor of the Commission, or employee of such contractor prepares, disseminates, or provides access to, any information pursuant to his employment or contract with the Commission, or his employment with such contractor.