UNIVERSITY OF CALIFORNIA
Radiation Laboratory
Berkeley, California

UCRL 1768

ELECTRICAL ENGINEERING REVIEW COURSE

Lecture IV
March 24, 1952
E. Martinelli

(Notes by: A. Chesterman, W. Decker)

I. CONDUCTORS IN ELECTRIC FIELDS

A. Point charge e and a conducting plane of infinite area:

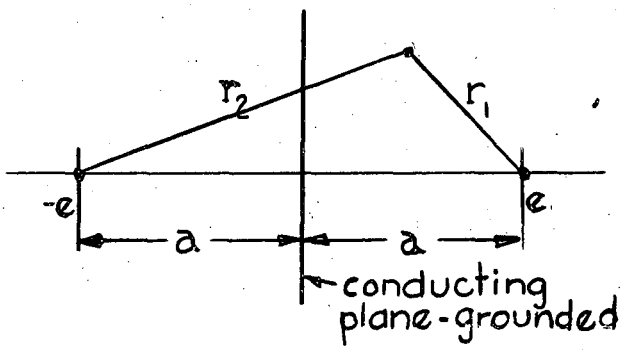

-e is an image of e

Potential $V = \dfrac{e}{4\pi k_o r_1} - \dfrac{e}{4\pi k_o r_2}$,

therefore at any point on plane $r_1 = r_2$

$$V = \frac{e}{4\pi k_o r_1} - \frac{e}{4\pi k_o r_1} = 0$$

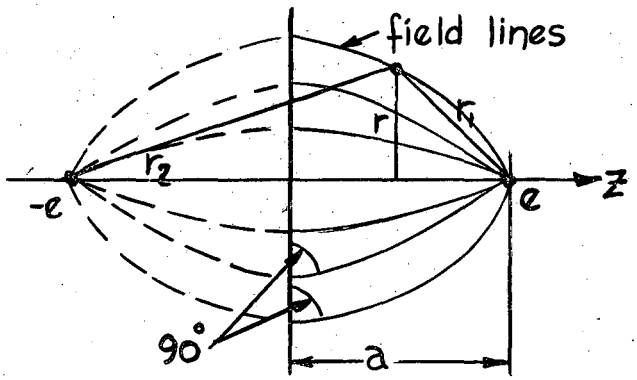

All field lines leaving e arrive at mirror image -e

$$r_1 = \sqrt{(z-a)^2 + r^2}$$

$$r_2 = \sqrt{(z+a)^2 + r^2}$$

$$V = \frac{e}{4\pi k_o}\left(\frac{1}{\sqrt{(z-a)^2 + r^2}} - \frac{1}{\sqrt{(z+a)^2 + r^2}}\right)$$

Electrostatic potential at any point in space between plane and e.

$$\vec{E} = -\text{grad } V = -\left(\frac{\partial V}{\partial r}\hat{r} + \frac{\partial V}{\partial z}\hat{z}\right)$$

$$= -\frac{e}{4\pi k_o}\left\{\left[\frac{r}{\left[(z-a)^2 + r^2\right]^{3/2}} - \frac{r}{\left[(z+a)^2 + r^2\right]^{3/2}}\right]\hat{r} + \left[\frac{z-a}{\left[(z-a)^2 + r^2\right]^{3/2}} - \frac{z+a}{\left[(z+a)^2 + r^2\right]^{3/2}}\right]\hat{z}\right\}$$

DISCLAIMER

This document was prepared as an account of work sponsored by the United States Government. While this document is believed to contain correct information, neither the United States Government nor any agency thereof, nor the Regents of the University of California, nor any of their employees, makes any warranty, express or implied, or assumes any legal responsibility for the accuracy, completeness, or usefulness of any information, apparatus, product, or process disclosed, or represents that its use would not infringe privately owned rights. Reference herein to any specific commercial product, process, or service by its trade name, trademark, manufacturer, or otherwise, does not necessarily constitute or imply its endorsement, recommendation, or favoring by the United States Government or any agency thereof, or the Regents of the University of California. The views and opinions of authors expressed herein do not necessarily state or reflect those of the United States Government or any agency thereof or the Regents of the University of California.

When $z = 0$, $E_z = \dfrac{e\ 2a}{4\pi k_o\ (a^2+r^2)^{3/2}}$ potential gradient from plane to e at the plane.

Surface charge on conducting plate $\sigma = k_o E$

Total charge $Q = \int \sigma\, dA$

For infinite area $Q = 1/2\ \dfrac{a}{\pi}\ e \displaystyle\int_0^\infty \frac{2\pi r\, d\, r}{(a^2+r^2)^{3/2}}$

$$= a\ e \left[\frac{1}{(a^2+r^2)^{1/2}}\right]_0^\infty = -e$$

This charge is said to have been induced on the conducting surface.

B. Point Charge and a conducting plane of finite area:

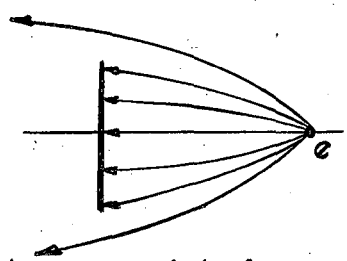

Some field lines miss the plane and go on to infinity, so the total charge would be less than the expression of Q above.

C. Force Between a point charge and a plate:

$$F = \frac{e^2}{4\pi k_o\ (4a^2)}$$

The same as the force between two point charges separated by a distance of 2a. Called an image force.

D. To find a sphere of zero potential. It follows that there is a constant potential surface between any two charges and that a metal surface could be inserted such that it would have potential = 0. Let $e_1 > e_2$.

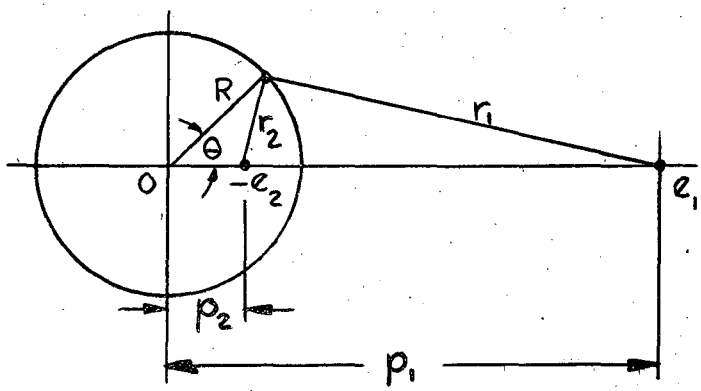

$$V = \frac{1}{4\pi k_o}\left(\frac{e_1}{r_1} - \frac{e_2}{r_2}\right)$$ from part A.

If potential is to be zero: $\frac{e_1^2}{e_2^2} = \frac{r_1^2}{r_2^2}$ or $\left(\frac{e_1}{r_1} = \frac{e_2}{r_2}\right)$

By law of cosines and by dividing: $\frac{r_1^2}{r_2^2} = \frac{R^2 + p_1^2 - 2Rp_1 \cos\theta}{R^2 + p_2^2 - 2Rp_2 \cos\theta} = \frac{e_1^2}{e_2^2}$

Let $R^2 = p_1 p_2$ and $\frac{e_1^2}{e_2^2} = \frac{p_1 p_2 + p_1^2 - 2p_1\sqrt{p_1 p_2} \cos\theta}{p_1 p_2 + p_2^2 - 2p_2\sqrt{p_1 p_2} \cos\theta}$

$$\frac{e_1^2}{e_2^2} = \frac{p_1 (p_2 + p_1 - 2\sqrt{p_1 p_2} \cos\theta)}{p_2 (p_1 + p_2 - 2\sqrt{p_1 p_2} \cos\theta)}$$

$R^2 = p_2^2\left(\frac{e_1}{e_2}\right)^2 = \text{constant}$, $\frac{e_1^2}{e_2^2} = \frac{p_1}{p_2}$ this defines the spherical surface, so that the ratio is independent of θ.

E. Sphere of finite surface and grounded:

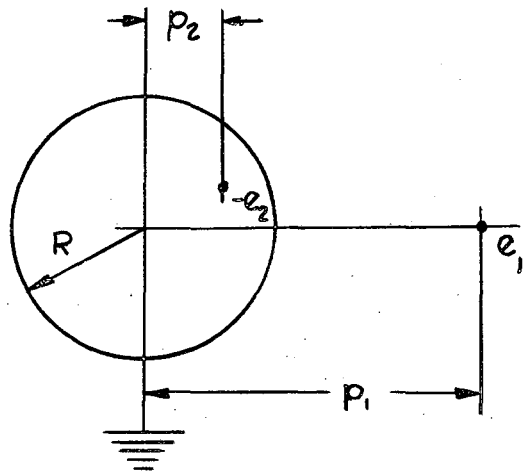

$$\frac{e_1^2}{e_2^2} = \frac{p_1}{p_2}$$

$$-e_2 = -e_1\sqrt{\frac{p_2}{p_1}}$$

$$R^2 = p_1 p_2$$

$$p_2 = \frac{R^2}{p_1} \text{ and } -e_2 = -e_1 \frac{R}{p_1}$$

Note as $p_1 \longrightarrow \infty$, $e_2 \longrightarrow 0$

Only enough charge in field lines comes from e_1 through sphere to make up e_2. Excess lines from e_1 go to infinity in other directions.

F. Sphere of finite surface and not grounded:

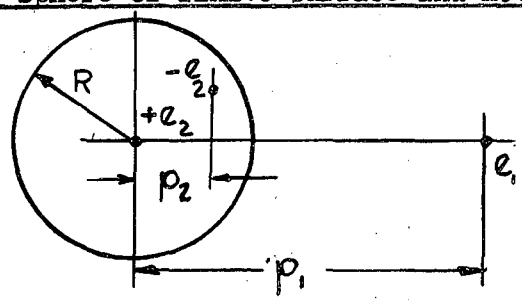

If sphere is not grounded then there is no way for charge to get on sphere and net charge is zero. However, a dipole moment is induced and the potential the sphere takes is

$$V = \frac{e_2}{4\pi k_o R}$$

If the ungrounded sphere is in a uniform field, let:

$$p_1 \longrightarrow \infty$$

$$e_1 \longrightarrow \infty$$

$$\frac{e_1}{4\pi k_o p_1^2} \longrightarrow E_o$$

$P = e_2 p_2$ dipole moment

$e_2 p_2 = \dfrac{e_1 R^3}{p_1^2}$ dipole moment

$$p_2 = \frac{R^2}{p_1}, \quad e_2 = e_1 \frac{R}{p_1}, \quad p_2 e_2 = \frac{e_1 R^3}{p_1^2}$$

$$p_2 e_2 \longrightarrow 4\pi k_o E_o R^3, \quad p_2 \longrightarrow 0$$

G. Effect of a dipole field:

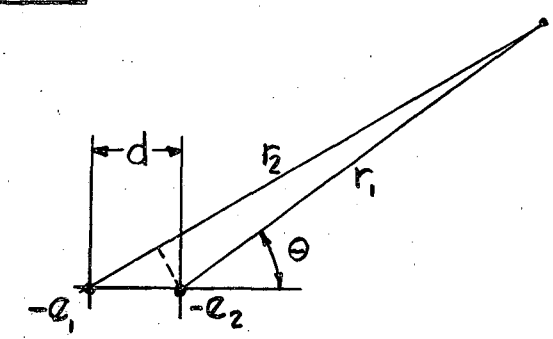

$$V = \left(\frac{e_1}{r_1} - \frac{e_1}{r_2}\right)\frac{1}{4\pi k_o}$$

$r_2 \simeq r_1 + d \cos\theta$ for $d \ll r_o$

$$V \simeq \frac{1}{4\pi k_o}\left[\frac{e_1}{r_1} - \frac{e_1}{r_1 + d\cos\theta}\right]$$

$$V \simeq \frac{e_1}{4\pi k_o r_1}\left[1 - \frac{1}{1+\frac{d}{r_1}\cos\theta}\right]$$

$$V \simeq \frac{e_1}{r_1}\frac{1}{4\pi k_o}\left[\frac{1+\frac{d}{r_1}\cos\theta - 1}{1+\frac{d}{r_1}\cos\theta}\right]$$

$$V \simeq \frac{e_1}{r_1}\frac{1}{4\pi k_o}\left[\frac{d}{r_2}\cos\theta\right]$$

$$V \simeq \frac{e_1}{4\pi k_o}\frac{d\cos\theta}{r_1 r_2} \simeq \frac{e_1 d\cos\theta}{4\pi k_o r_1^2}, \text{ and } r_1 \simeq r_2$$

$$V \simeq \frac{P}{4\pi k_o}\frac{\cos\theta}{r_1^2} \quad \text{where } e_1 d \equiv P \quad \text{dipole moment}$$

$$\vec{E} = -\text{grad } V = \frac{\partial V}{\partial r}$$

$$= -\frac{2P}{4\pi k_o r_1^3} \quad \text{for } \theta = 0^\circ$$

$$V = E_o z \text{ where } z = r\cos\theta \ (r_1 \cong r_2)$$

$$V = E_o r\cos\theta$$

$$V = E_o r\cos\theta - \frac{E_o R^3\cos\theta}{r^2}$$ potential of an ungrounded metal sphere in a uniform field.

II. DIELECTRICS

A. Condenser capacity changes with insulating material:

For a parallel plate condenser

$$C = k_o k \frac{A}{d}$$

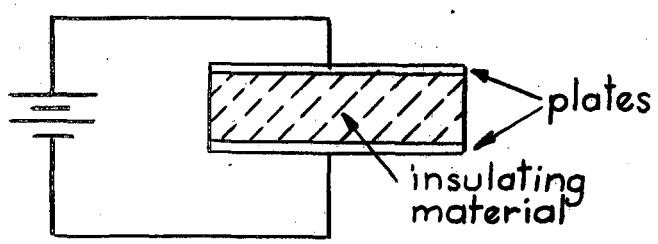

Where: k_o is a constant dependent on the units.

A = plate area

d = gap length

k has no dimensions and is called dielectric constant.

k	Material
1.0000	Vacuum
1.0006	Air
81	Water
5 - 7	Glass
1000	Titanium Dioxide

Dielectric constant varies with frequency of charge variation. At high frequency (say frequency of light) the high dielectric constant material such as Titanium Dioxide drops to about 5 - 7.

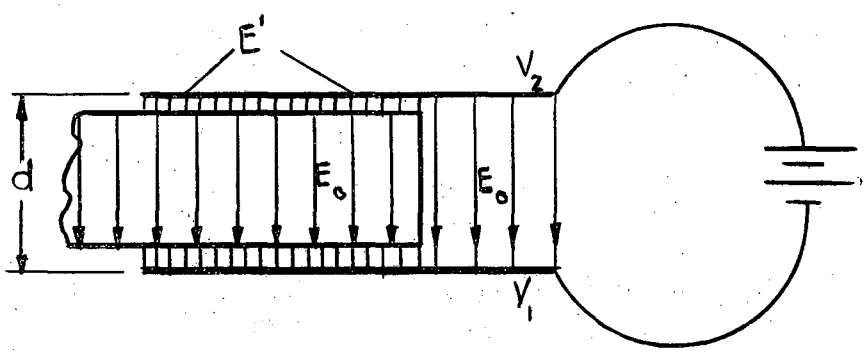

For the plate condenser shown, on each plate there is a charge of surface density $\pm \sigma$ where:

$$\sigma_o = k_o \left(\frac{V_2 - V_1}{d} \right) = |E_o| \, k_o \quad \text{(Assume a vacuum } k = 1\text{)}$$

If we now insert in the condenser a plate of insulating material, of thickness d and dielectric constant k, we obtain in that part of the condenser which is occupied by the material a different surface density of charge:

$$\sigma = k_o \, k \, \frac{V_2 - V_1}{d} = k_o \, k \, |E_o|$$

While the dielectric is being inserted in the condenser, the battery must accordingly supply a quantity of electricity,

$$\sigma - \sigma_o = k_o \, (k-1) \left(\frac{V_2 - V_1}{d} \right) = k_o \, (k-1) \, |E_o|$$

for every unit area covered by the dielectric; that it does so may easily be verified by an ammeter.

The opening between the plate and the dielectric does not alter the capacity or charge of the condenser; hence in the opening the intensity must have the value:

$$\sigma = k_o\, k\, \frac{V_2 - V_1}{d} = k_o\, k\, \left|E_o\right| = \left|E'\right|\, k_o$$

for the plate surface has now a vacuum adjacent to it. In the interior of the dielectric the intensity must still be E_o. It follows that when we pass from the opening into the dielectric, the intensity E jumps from $k\,E_o$ to E_o. But a sudden change in the normal component of the field strength is always equivalent to the presence of a surface charge. The effect of the dielectric on the electrostatic field is therefore the same as if its surface carried a charge of surface density σ', where:

$$\sigma' = (k-1)\ (E_o n)$$

E_o being the intensity in the insulator, and n the normal to the insulator, drawn outwards.

plc
4/17/52