UCRL-17728

University of California

Ernest O. Lawrence Radiation Laboratory

RAPID BEAM CUTOFF FOR 88-INCH CYCLOTRON

Henry S. Dakin and William W. Wadman III

May 1, 1967

TWO-WEEK LOAN COPY

This is a Library Circulating Copy which may be borrowed for two weeks. For a personal retention copy, call Tech. Info. Division, Ext. 5545

Berkeley, California

DISCLAIMER

This document was prepared as an account of work sponsored by the United States Government. While this document is believed to contain correct information, neither the United States Government nor any agency thereof, nor the Regents of the University of California, nor any of their employees, makes any warranty, express or implied, or assumes any legal responsibility for the accuracy, completeness, or usefulness of any information, apparatus, product, or process disclosed, or represents that its use would not infringe privately owned rights. Reference herein to any specific commercial product, process, or service by its trade name, trademark, manufacturer, or otherwise, does not necessarily constitute or imply its endorsement, recommendation, or favoring by the United States Government or any agency thereof, or the Regents of the University of California. The views and opinions of authors expressed herein do not necessarily state or reflect those of the United States Government or any agency thereof or the Regents of the University of California.

UCRL-17728
UC-28 Particle Accel. and
High Volt. Mach.
TID-4500 (50th Ed.)

UNIVERSITY OF CALIFORNIA
Lawrence Radiation Laboratory
Berkeley, California

AEC Contract No. W-7405-eng-48

RAPID BEAM CUTOFF FOR 88-INCH CYCLOTRON

Henry S. Dakin and William W. Wadman III

May 1, 1967

Printed in the United States of America
Available from
Clearinghouse for Federal Scientific and Technical Information
National Bureau of Standards, U.S. Department of Commerce
Springfield, Virginia 22151
Price: Printed Copy $3.00; Microfiche $0.65

RAPID BEAM CUTOFF FOR 88-INCH CYCLOTRON

Henry S. Dakin and William W. Wadman III

Lawrence Radiation Laboratory
University of California
Berkeley, California

May 1, 1967

ABSTRACT

We describe the design and operation of an electronic system which, upon an unexpected rise in cyclotron-produced radiation intensity, simultaneously sounds an alarm and deactivates the radiation source within 2×10^{-6} sec.

I. INTRODUCTION

During trouble-shooting operations at the 88-inch cyclotron, one must occasionally make visual observations through the vacuum tank window from within the main shielding. For these observations, the observer's radiation exposure is kept low in either of two ways: the accelerated beam may be held to a small radius by an internal probe; or the frequency of the accelerating potential may be deliberately held out of resonance with the magnetic field to prevent the acceleration of a beam.

In spite of numerous precautions which are taken by the cyclotron operators, there is a small chance that the beam intensity will accidentally rise to a very high level. To a man inside the main shielding, the beam-produced stray radiation could, in an extreme case, give a lethal dose in less than a second, or a full year's normally allowable exposure in 0.01 sec. To prevent this, the beam must be shut off in the shortest possible time after the stray radiation level inside the shielding begins to increase.

II. SLOW-ACTING CUTOFF METHODS

Conventional linear and logarithmic count-rate meters[1] with alarm relays take at least 0.1 sec to give an alarm indication after a sharp rise in radiation intensity. This relatively long time is due to unavoidable limitations in count-rate metering time constants and relay response times.

III. RAPID BEAM-CUTOFF SYSTEM

A system which can be used to shut off the cyclotron beam within as little as 2 μsec after an accidental rise in radiation level is shown in block diagram form in Fig. 1. This system consists of a moderated-BF_3 proportional counter neutron detector with preamplifier assembly (Fig. 2) located inside the main shielding near the cyclotron's vacuum chamber, and electronic equipment (Fig. 3) mounted on racks in the control room.

IV. SYSTEM OPERATION

We will describe the operation of the rapid beam-cutoff system (Fig. 1) by considering in order the function of each of the system's components:

1. Radiation detector/preamplifier assembly translates neutron-flux radiation intensity into pulse-repetition frequency.

2. High-voltage power supply[2] provides a potential of 1800 V to the anode of the detector.

3. Inverting pulse amplifier and low-voltage power supply[3] provides power to the preamplifier, and amplifies and inverts the negative pulses from the detector/preamplifier assembly.

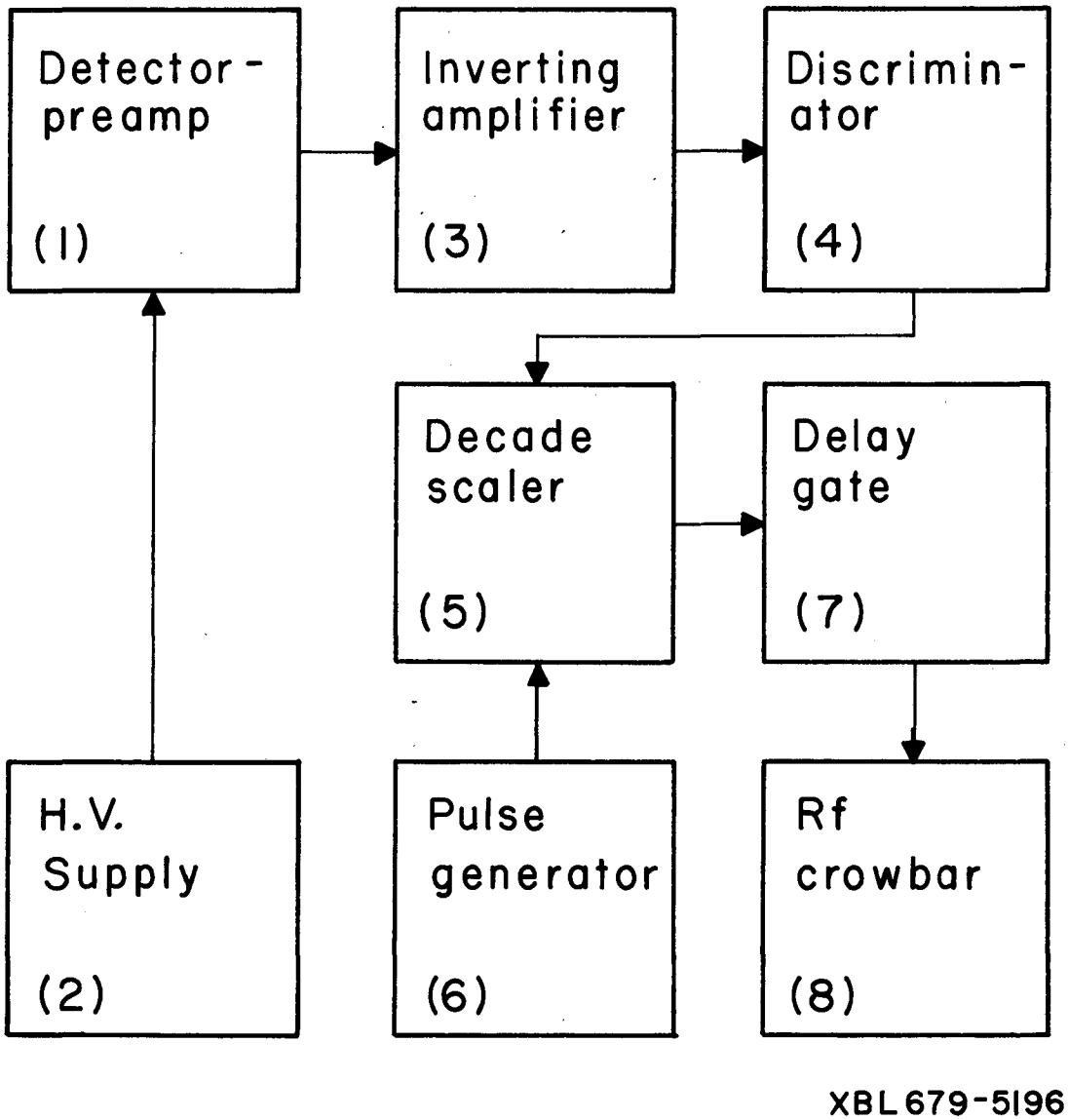

Fig. 1. Block diagram of rapid beam-cutoff system at 88-inch cyclotron. Numbers in parentheses refer to description of system in text.

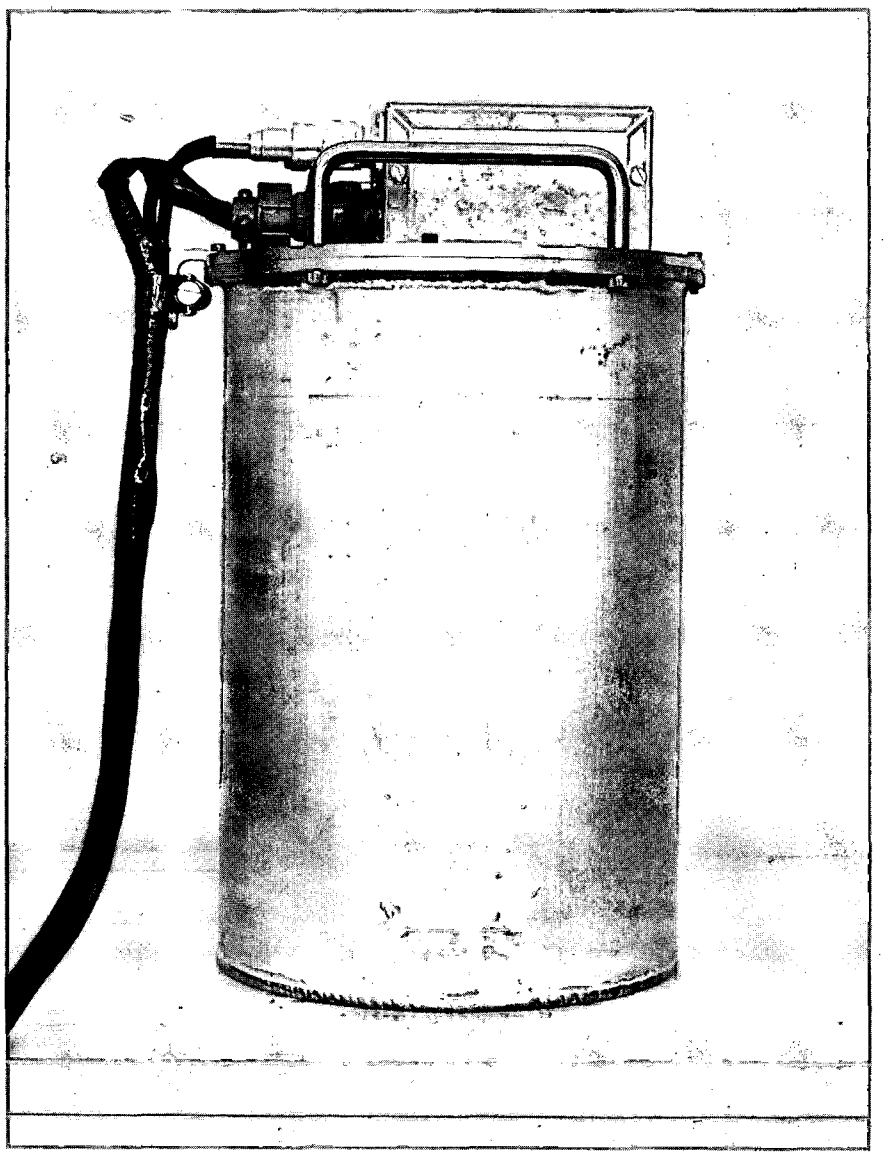

XBB 678-4671

Fig. 2. Moderated BF_3 neutron detector/preamplifier assembly, with cables not attached.

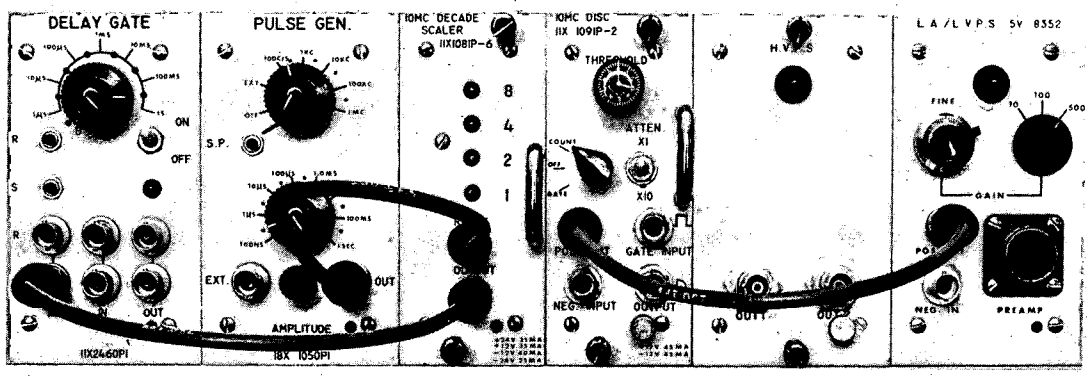

XBB 678-4668

Fig. 3. Rapid beam-cutoff system at 88-inch cyclotron. Components located in main control room include (right to left) linear inverting pulse amplifier, high-voltage power supply, 10-MHz discriminator, 10-MHz decade scaler, pulse generator, and delay gate. Cables leading from radiation detector-preamplifier to the pulse amplifier and high-voltage power supply are not shown.

4. Pulse-height discriminator[4] acts upon 0- to 10-V positive pulses received from the inverting amplifier output. Pulses below a preset voltage level, about 100 mV, representing electrical noise and gamma-ray events, are rejected, while others are passed on to the next step.

5. A single-decade high-speed scaler,[5] with connections for electrical-reset input and decade-carry output, counts pulses which come from the discriminator, while at the same time being periodically reset to zero. Under normal or safe conditions, the scaler never counts as many as ten pulses, because it is reset before 10 counts have appeared. Therefore, the decade-carry output normally shows no signal. But when the radiation level rises above a point determined by the reset-pulse frequency, the decade-carry pulse appears at once after 10 pulses have been counted.

6. A pulse generator[6] provides 4-V reset pulses to the scaler, at a rate which may be varied from 10^2 to 10^6 pulses/sec. Normally it is set to a pulse frequency of 100 pulses/sec and a pulse width of 0.2 μsec.

7. A monostable multivibrator or "variable delay gate"[7] produces a pulse which may be varied in length between 0.1 μsec and 1 sec when it is activated by the short (0.05 μsec) decade-carry output pulse from the scaler. Normally the pulse length is set at 1 sec, to give a visible or audible indication that an unsafe condition exists.

8. The rf "crowbar" is a thyratron-operated switch which effectively short-circuits to ground the cyclotron's accelerating potential, thus cutting off the beam. It is triggered by the monostable multivibrator output pulse, which for crowbar operation may have any length greater than 2 μsec. Once activated the crowbar keeps the beam shut off until it is manually reset.

V. OPERATING INSTRUCTIONS

A. Assembly of Components

The rapid beam-cutoff system is disconnected by a switch on the delay gate during normal cyclotron operations; otherwise the cyclotron would never be able to accelerate beam. The system is kept ready for use on short notice, by maintaining all connections between the components as they are described below and in Fig. 1. After the components have been assembled and connected properly, with the control settings as specified, the system should need no further attention other than to make or break the connection to the rf crowbar.

When putting the rapid beam-cutoff system into operation for the first time, insert the modules in the power-supply bin in the order shown in Fig. 3. Connect the cables leading from the radiation detector/preamplifier assembly to the high-voltage power supply and to the "input" and low-voltage preamplifier power connections of the inverting pulse amplifier (note that the pulse amplifier is labeled on some units L.A./L.V.P.S. --for "Linear Amplifier/Low Voltage Power Supply"). Then connect the pulse amplifier output to the "positive input" of the discriminator. The output of the discriminator is already wired to the scaler input through the bin wiring at the rear of the

modules. Connect the scaler "reset" input to the pulse generator "output" and the scaler "output" to the "set input" of the delay gate. Then connect the "set output" of the delay gate to the rf crowbar, which is located in the basement of Bldg. 88.

B. Control Settings

Pulse amplifier:	coarse gain, rotary switch: 500 fine gain, helipot: 5.00
Discriminator:	threshold, helipot: 3.00 attenuation, toggle switch: ×1 count/off/gate, rotary switch: count
Pulse generator:	frequency, rotary switch: 100 Hz - 1000 Hz frequency, concentric pot: max ccw pulse length, rotary switch: 100 nsec - 1 μsec pulse length, concentric pot: max ccw
Delay gate:	pulse length, rotary switch: 100 msec - 1 sec pulse length, concentric pot: max cw

C. Test Procedure

With the cyclotron beam off and the vault shield door open, bring a plutonium-beryllium neutron source, with a neutron emission between 10^6 and 2×10^7 n/sec, to within 20 cm from the radiation detector/preamplifier assembly. Observe the indicator lamp on the delay gate; it should be on continuously when the source is near the detector, and intermittently when the source is moved a short distance away from the detector. The "on" condition indicates that the rf crowbar is being activated. The 1-2-4-8 readout lamps of the scaler should all be flashing, indicating that the pulse rate is sufficient to cause the scaler to count more than 10 pulses during the 0.01-sec intervals between reset pulses.

The remove the source to a distance of 3 m or more from the detector, to cause the neutron flux intensity at the detector to decrease to less than 10 n/cm^2-sec. The delay gate indicator lamp should then remain off, and the "1" and "2" readout lamps should light intermittently, the others remaining off. This corresponds to the "safe" or normal condition, in which the rf accelerating potential is not diverted to ground.

VI. RADIATION DETECTOR/PREAMPLIFIER ASSEMBLY

We noted above that the radiation detector[8, 9] used in this system is sensitive only to neutron flux and not to gamma-ray activity. This is important because gamma radiation may be present as induced activity near the cyclotron when the beam is off, but neutrons are present only when a beam is being accelerated.

The detector is a commercially made BF_3 proportional counter, fitted to a preamplifier assembly and enclosed in a moderator which consists of a polyethylene cylinder covered with layers of cadmium and aluminum. When the anode of the detector is supplied with an 1800-V operating potential, a small pulse signal appears at the anode with the occurrence of a $^{10}B(n, \alpha)^7Li$ reaction, between an incoming thermalized neutron and a ^{10}B atom inside the detector. By the use of an unusually low-valued load resistor (100 kΩ) and a small coupling capacitor, together with a fast preamplifier with a 2500 Ω input impedance, the detector pulses are shaped to lengths between 0.1 and 0.5 μsec; this may be compared with the 1- to 5-μsec pulse lengths characteristic of most other detector/preamplifier assemblies in common use. A special advantage in limiting the detector pulse length before it has passed through the preamplifier is that one can then effectively use fast discriminating and scaling equipment, without the necessity of pulse clipping by later differentiation or by delay lines. The preamplifier has a gain of 3, to compensate for the pulse-size reduction which results from using a small load resistor.

VII. DETECTOR SENSITIVITY

The detector is calibrated by placing it in a radiation field produced by a Pu-Be neutron source of known intensity, and with the inverting amplifier and the discriminator set appropriately, using a 3- to 6-decade scaler to count the number of pulses passing through the discriminator within a given time. In a neutron flux intensity of 10 n/cm^2-sec, the pulse rate is close to 1000 per minute. This means that 10 pulses from the detector--the number needed to activate the rf crowbar and turn off the cyclotron--corresponds to a time-integrated neutron flux of 6 n/cm^2. The calculated equivalent biological dose, when the average neutron energy is assumed to be 1 MeV, is 6 $n/cm^2 \times 3.4 \times 10^{-8}$ $(rem/n\text{-}cm^2)$ or 2.0×10^{-7} rem. This flux of 6 n/cm^2, or the equivalent dose of 2.0×10^{-7} rem occurring in the 0.01-sec interval between scaler-reset pulses, produces flux rates and dose rates, respectively, of 600 n/cm^2 sec and 2.0×10^{-5} rem/sec (0.072 rem/h): this is the maximum continuous level of radiation intensity that can exist without triggering the rapid beam-cutoff system and stopping the cyclotron. In actual operation, the system is activated by neutron fluxes as low as 1/5 of this level, because of random variations in the time distribution of pulses from the detector.

VIII. MODIFICATION OF SCALER

The scaler used with this system is designed with a push-button reset switch on the front panel. It can be modified to allow electrical reset of the scaler by a 4-V pulse rather than by the switch. This is done by replacing the switch with a BNC connector and a simple two-transistor switch circuit, shown schematically as Fig. 4.

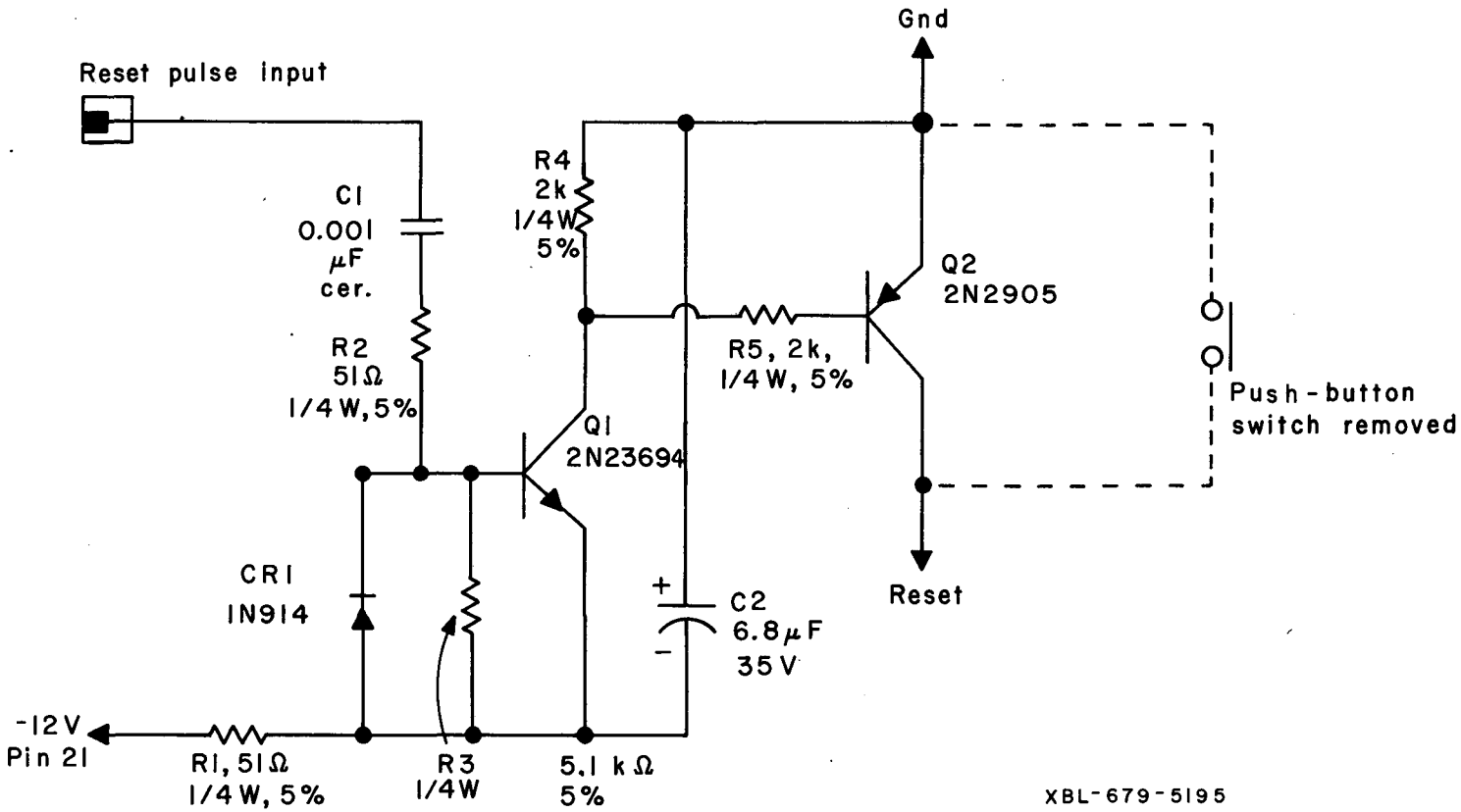

Fig. 4. Reset circuitry in 10-MHz decade scaler modified to substitute electrical reset for mechanical reset switch.

IX. CONSTRUCTION OF EQUIPMENT

The components of the rapid beam-cutoff system as presently used, with the exception of the modified scaler described above, are standard items used in a variety of different counting systems at LRL. Most of the components installed in the control room, and shown in Fig. 3, are built according to the LRL modular "nanologic box" style of construction, because they are already available in that form. For most purposes involving new fabrications, this module style has been superseded by the AEC's newly adopted National Instrument Module System (NIMS), which is in general use in laboratories throughout the country.

X. SIMPLIFICATION OF CIRCUITRY

In planning construction of future rapid beam-cutoff systems at the 88-inch cyclotron or elsewhere, especially where two or more independent systems are needed for maximum protection, some consideration should be given to the possibility of simplifying the circuitry. This could be done by eliminating some features not used in the rapid beam-cutoff system, but which are built into the present delay-gate, pulse-generator, and discriminator modules. The necessary functions of the present modules could be performed by a single NIMS module, using commercially available integrated-circuit devices. As an example, an integrated-circuit decade scaler (Fairchild μL958 or equivalent) and two multivibrator circuits, one astable to provide reset pulses, and the other monostable to lengthen the decade carry output pulse, could replace all of the components of the system except for the pulse amplifier, high-voltage power supply, and the detector/preamplifier assembly.

Apart from a substantial cost saving, a system built in this way could be expected to show greater reliability, because of the reduction in the number of switch and circuit-board contacts and external connecting cables.

XI. TESTING OF SYSTEM

During attempts to achieve beam acceleration in the cyclotron, frequently an arc passes from the rf accelerating electrode to ground. Just after the arc occurs, a resonance condition between the accelerating frequency and the magnetic field strength can cause an accelerated beam for a short time, without the operator's being aware of it. Because conventional count-rate meters and beam current indicators cannot respond effectively to a burst of beam current unless it is longer than a few tenths of a second, the operators may wrongly suppose that no beam had been accelerated, and that there was thus no radiation hazard to a person making observations inside the shielding.

Observations were made to determine the time distribution of radiation intensity during beam startup, with the rf crowbar disconnected. This was done by determining the time lapse between successive scaler decade

output pulses after appearance of an arc from the accelerating electrode to ground. In a typical observation, 11 decade output pulses--corresponding to 110 neutron detector pulses, or 2.2×10^{-6} rem--were seen in a 0.1-sec period, the first occurring 0.02 sec after the arcing, and the rest at 0.005- to 0.04-sec intervals.

In a test made with the rf crowbar connected to the accelerating electrode and activated by the scaler decade output pulse, the beam was shut off after the first decade output pulse. This shutoff permitted a maximum radiation dose of 2.0×10^{-7} rem inside the shielding, instead of 2.2×10^{-6} rem as in the previous observation, or a very much higher dose which could have resulted from accidental acceleration of a high-intensity beam if the rapid beam-cutoff system had not been in operation.

ACKNOWLEDGMENTS

For his helpful suggestions, the authors wish to thank Mr. John Bowen, of the 88-inch cyclotron operating staff, who originally requested the development of this system.

We are also indebted to the Physics Technical Support group at LRL for their help in supplying equipment.

This work was done under the auspices of the U. S. Atomic Energy Commission.

REFERENCES

1. H. S. Dakin, Logarithmic Count-Rate Meter and Alarm System, UCRL-17281 (in preparation).
2. H. S. Dakin, High Voltage Power Supply, Schematic, LRL Drawing 5V8012 (1967).
3. H. S. Dakin, Inverting Pulse Amplifier, UCID-3064 (1967).
4. D. Wieber, 10-Mc Discriminator, Schematic, LRL Drawing 11X1091-S1 (1962).
5. H. G. Jackson, 10-Mc Scaler, Nanobox Unit, Schematic, LRL Drawing 11X1091-S7 (1962).
6. H. G. Jackson, Nanobox Pulse Generator, Schematic, LRL Drawing 18X1052-S1 (1963).
7. H. G. Jackson, Delay Gate, Schematic, LRL Drawing 11X2462-S1 (1963).
8. N. Wood Counter Laboratory, Inc., Chicago, Illinois, N. Wood Radiation Detectors (1965).
9. H. S. Dakin, Radiation Detector/Preamplifier Assembly, UCID-2836-Rev. (1967).

This report was prepared as an account of Government sponsored work. Neither the United States, nor the Commission, nor any person acting on behalf of the Commission:

A. Makes any warranty or representation, expressed or implied, with respect to the accuracy, completeness, or usefulness of the information contained in this report, or that the use of any information, apparatus, method, or process disclosed in this report may not infringe privately owned rights; or

B. Assumes any liabilities with respect to the use of, or for damages resulting from the use of any information, apparatus, method, or process disclosed in this report.

As used in the above, "person acting on behalf of the Commission" includes any employee or contractor of the Commission, or employee of such contractor, to the extent that such employee or contractor of the Commission, or employee of such contractor prepares, disseminates, or provides access to, any information pursuant to his employment or contract with the Commission, or his employment with such contractor.