UCRL-17733

cy. 2

University of California

Ernest O. Lawrence Radiation Laboratory

IS THE POMERANCHON A FIXED POLE?

Jerome Finkelstein and Chung-I Tan

August 10, 1967

TWO-WEEK LOAN COPY

This is a Library Circulating Copy which may be borrowed for two weeks. For a personal retention copy, call Tech. Info. Division, Ext. 5545

RECEIVED
LAWRENCE
RADIATION LABORATORY
LIBRARY AND
DOCUMENTS SECTION

Berkeley, California

UCRL-17733
cy. 2

DISCLAIMER

This document was prepared as an account of work sponsored by the United States Government. While this document is believed to contain correct information, neither the United States Government nor any agency thereof, nor the Regents of the University of California, nor any of their employees, makes any warranty, express or implied, or assumes any legal responsibility for the accuracy, completeness, or usefulness of any information, apparatus, product, or process disclosed, or represents that its use would not infringe privately owned rights. Reference herein to any specific commercial product, process, or service by its trade name, trademark, manufacturer, or otherwise, does not necessarily constitute or imply its endorsement, recommendation, or favoring by the United States Government or any agency thereof, or the Regents of the University of California. The views and opinions of authors expressed herein do not necessarily state or reflect those of the United States Government or any agency thereof or the Regents of the University of California.

To be submitted to Physical Review Letters

UCRL-17733
Preprint

UNIVERSITY OF CALIFORNIA

Lawrence Radiation Laboratory
Berkeley, California

AEC Contract No. W-7405-eng-48

IS THE POMERANCHON A FIXED POLE?

Jerome Finkelstein and Chung-I Tan

August 10, 1967

UCRL-17733

IS THE POMERANCHON A FIXED POLE?

Jerome Finkelstein and Chung-I Tan

Lawrence Radiation Laboratory
University of California
Berkeley, California

August 10, 1967

ABSTRACT

There have been suggestions recently that the Pomeranchuk trajectory might have zero slope. It is shown here that the Mandelstam cut mechanism, which allows the existence of fixed poles at negative values of angular momentum, is not sufficient to allow the Pomeranchon to have zero slope. It is suggested that this fact makes it unlikely that the Pomeranchon is a fixed pole.

IS THE POMERANCHON A FIXED POLE?*

The Pomeranchuk trajectory has had a rather interesting history. Some time ago it was thought to be a trajectory much like any other, giving rise to the f^0 when it went through spin 2, and having a slope similar to the other trajectories.[1] More recently, the observed non-shrinkage of diffraction peaks has indicated that the Pomeranchon has an anomalously small slope, so that at present it is the only trajectory generally accepted by Regge phenomenologists which has no particles assigned to it. It is understood that, in the absence of any cuts in the angular momentum plane, no trajectory can be flat (i.e., a fixed pole); however, the realization that cuts can and probably do allow flat trajectories at negative values of ℓ has led to speculation that the Pomeranchon is also flat. This possibility has been suggested in a recent paper by Oehme,[2] who pointed out that it would provide a simple way to construct a model having both non-shrinking diffraction peaks and asymptotically constant cross sections. It would also eliminate the unpleasant feature, present if the Pomeranchon is not flat, of the amplitude having an infinite number of branch points, corresponding to the exchange of all numbers of Pomeranchuk poles, converging at $J = 1$ in the forward direction.

Oehme also suggests that the cuts proposed by Mandelstam[3] might allow the Pomeranchon to be flat. In this note we would like to review briefly the mechanism by which the Mandelstam cuts are thought[4] to allow the fixed Gribov-Pomeranchuk poles at negative integral values

of ℓ, and show that this mechanism is <u>not</u> sufficient to allow the Pomeranchon to be flat. The Gribov-Pomeranchuk argument[5] does show that there is a fixed pole at $J = +1$, coupled to those channels for which $J = 1$ is "nonsense;" Oehme's suggestion, however, would require a fixed pole coupled to a "sense" channel, while the Mandelstam cuts allow fixed poles only at "nonsense" values. We will point out what strange new features one who believes that the Pomeranchon is flat would have to postulate, and suggest that it is more plausible that the Pomeranchon is <u>not</u> a fixed pole.

Consider the partial-wave amplitude $a(\ell, s)$ for the elastic scattering of two spinless particles, a and b, where s is the square of the center-of-mass energy. If the unitarity equation could be continued in the ℓ plane, we would have, for fixed s above threshold and all real ℓ,

$$a(\ell, s + i\epsilon) - a(\ell, s - i\epsilon) = \rho(s)\, a(\ell, s + i\epsilon)\, a(\ell, s - i\epsilon). \quad (1)$$

A simple application of this equation shows that there cannot be fixed poles: if there were for all s a pole in $a(\ell, s)$ at $\ell = \ell_0$ -- i.e., a fixed pole in the ℓ plane--then the RHS of Eq. (1) would have a double pole, while the LHS would have at most a simple pole. Conversely, it can be shown that, if there is a fixed pole at $\ell = \ell_0$, there must be a cut in the s-plane which moves as ℓ is varied, and which coincides with the elastic threshold at $\ell = \ell_0$. This situation

is illustrated in Fig. 1. Since sheet II of the s-plane can not be reached from sheet I at $\ell = \ell_0$, $a(\ell_0, s - i\epsilon)$ will not longer be the analytic continuation of $a(\ell_0, s + i\epsilon)$. It is then possible for the fixed pole not to be present on sheet II, in which case Eq. (1) does not lead to a contradiction.

Some time ago, Gribov and Pomeranchuk[5] showed that the left-hand discontinuity of the partial-wave amplitude had poles at negative integral values of ℓ. This means that the partial-wave amplitude itself has fixed singularities which are at least simple poles; however, if there are no moving cuts, the above argument shows that fixed poles are not possible, and in fact that the partial-wave amplitude has fixed essential singularities at the negative integers.. Now, essential singularities are in general frowned upon; moreover, if one lets the external particles have spin, negative values of ℓ can correspond to large positive values of J, in which case it can be shown that anything more singular than a pole will violate the Froissart bound. The requirement that the Gribov-Pomeranchuk singularities be simple poles leads to the necessity for moving cuts which coincide with the elastic threshold at negative integral values of ℓ.

Mandelstam[3] has argued that, corresponding to diagrams (such as illustrated in Fig. 2(a)) containing in the intermediate state a trajectory α and a spinless particle of mass M, moving branch points exist, whose positions are given by

$$\alpha_{cut}^{(1)}(s) = \alpha[(s^{\frac{1}{2}} - M)^2] - n, \quad n = 1,2,3\cdots . \qquad (2)$$

There will also be cuts corresponding to diagrams such as Fig. 2(b), which, in the special case that the trajectories α and $\bar{\alpha}$ are the same, are given by

$$\alpha_{cut}^{(2)}(s) = 2\,\alpha(s/4) - n\,, \quad n = 1,2,3\cdots\,, \tag{3}$$

but these will not be important for our argument. We can see that the cuts in Eq. (2) have precisely the property which in the preceding paragraph was found necessary: take the particle labelled M to be the same as the external particle b, and α the trajectory on which a lies; then Eq. (2) shows that these moving cuts coincide with the threshold at all negative integral ℓ .

Thus whenever the Gribov-Pomeranchuk argument would otherwise require an essential singularity, the Mandelstam cuts fastidiously cover up every two-body threshold, and allow the fixed singularity to be a pole.[6] This, it seems to us, is a very beautiful and appealing result, especially as it does not depend on any assumption whatever about either the shape or the spectrum of trajectories; the fixed pole in the (a,b) amplitude is allowed, because of the cuts produced by the trajectories on which a and b lie.

So far we have not said in which of the two signatured amplitudes the fixed poles and the cuts appear. The Gribov-Pomeranchuk singularity at $\ell = \ell_0$ appears in the amplitude which is "wrong signature" at ℓ_0 . By an extension of Mandelstam's original argument,[3] it can be shown that the cut at $\alpha_{cut}^{(1)} = \alpha[(s^{\frac{1}{2}} - M)^2] - n$ appears only in the amplitude whose

signature is (signature of $\alpha) \times (-1)^{n+1}$. In view of the above discussion, we are not surprised that this is the right relationship, so that the Mandelstam cuts appear just when they are needed!

Now we wish to see whether the Mandelstam mechanism allows a fixed pole at $J = 1$ to couple to channels which are "sense" there. For this purpose, let us consider the $\pi\pi$ elastic amplitude. (We could also consider the amplitude whose s-channel is $\pi\pi \to N\bar{N}$, and to which, from the asymptotically constant πN cross section,[7] we know that the Pomeranchon is coupled, but for simplicity we continue with the example of spinless particles.) The moving cuts we have discussed will come to threshold only for negative values of ℓ. It is easy to see from Eqs. (2) and (3) that none of the cuts generated by the Mandelstam mechanism, with any known trajectories, will in general coincide with the $\pi\pi$ threshold at $\ell = J = +1$. Conversely, if we insist that there be a cut, generated by the Mandelstam mechanism, which coincides with the $\pi\pi$ threshold, we have to assume something drastic about the trajectory functions. Probably the simplest assumption that would do is the assumption that there be some trajectory $\hat{\alpha}$ such that $\hat{\alpha}(m_\pi^2) = 1$. The supposedly fixed Pomeranchon would seem to fill this need, until we realize that the Mandelstam mechanism requires at least one moving pole; furthermore, any cut involving the Pomeranchon would itself be flat, so such a cut would contradict the assumption that for negative s the singularity at $J = 1$ is just a pole. We would have to require that for every spinless particle a, there exists a moving trajectory $\hat{\alpha}$ with $\hat{\alpha}(m_a^2) = 1$. We do not suggest that this requirement is actually satisfied;

we mention it to illustrate the lengths to which one has to go to allow the Pomeranchon to be flat.

Of course, we can not completely rule out the possibility that there are extra cuts, not produced by the Mandelstam mechanism, which might serve the purpose of covering up all thresholds of channels with vacuum quantum numbers. In fact, one might argue as follows: All known Regge trajectories are associated with physical particles, and the cuts in which they participate through the Mandelstam mechanism are thus associated with particular channels. Each cut is responsible for allowing the existence of a Gribov-Pomeranchuk fixed pole generated by its associated channel. But the Pomeranchuk pole, if fixed, is unique; it is in some sense a reflection of the properties of diffraction scattering, and so is associated with an infinite number of (inelastic) channels. Is it not therefore to be expected that there be cuts connected in some way with the fixed Pomeranchon, which are not associated with any particular channel, and therefore do not arise from the Mandelstam mechanism?

We certainly cannot <u>prove</u> that this is not the case, so let us observe that it would be a very clever cut which, although not associated with any channel, nevertheless comes precisely to the (a,b) threshold at $J = 1$. Also, a supposed virtue of the idea that the Pomeranchon could be fixed is that it would simplify the situation; however, if we are forced to postulate many extra cuts of unknown origin, the situation is far from simple.

Finally, we should point out that none of these considerations would prevent the Pomeranchon from being a fixed <u>cut</u>; this is a

possibility which warrants further study. We have shown that, were the Pomeranchon a fixed pole, there would have to be either cuts not arising from the Mandelstam mechanism, or drastic restrictions on the trajectories. In view of the fact that, for all the fixed poles that have been established, the Mandelstam mechanism with no restrictions works so beautifully, we feel that this result makes it unlikely that the Pomeranchon is a fixed pole.

We would like to thank Prof. Geoffrey F. Chew and Prof. Stanley Mandelstam for several stimulating discussions.

FOOTNOTES AND REFERENCES

* Work done under the auspices of the U. S. Atomic Energy Commission.

1. See, for example, G. F. Chew, Phys. Rev. 140, B1427 (1965).

2. R. Oehme, Phys. Rev. Letters 18, 1222 (1967). See also L. Van Hove, Rapporteur talk, Session 12, in Proceedings of the XIIIth International Conference on High Energy Physics, Berkeley, California, 1966, (University of California Press, Berkeley, 1967), p. 253.

3. S. Mandelstam, Nuovo Cimento 30, 1148 (1963). See also V. N. Gribov, I. Ya. Pomeranchuk, and K. A. Ter-Martirosyan, Phys. Rev. 139, B184 (1965).

4. C. E. Jones and V. L. Teplitz, "Branchpoints, Fixed Poles, and Falling Trajectories in the Complex J-Plane," Phys. Rev. (to be published); S. Mandelstam and L.-L. Wang, "Gribov-Pomeranchuk Poles in Scattering Amplitudes," Phys. Rev. (to be published).

5. V. N. Gribov and I. Ya. Pomeranchuk, Phys. Letters 2, 239 (1962).

6. When a and b have different masses, the argument is more complicated, but it is still true that the two-body threshold is covered by the cuts of Eq. (2). Hwa (Stony Brook preprint) has suggested that, by considering multiparticle discontinuity formulae, one could show that the shapes of the trajectories have to satisfy certain very stringent conditions if there are not to be essential singularities. However, this suggestion relies both on a conjectured continuation in ℓ of multiparticle discontinuity formulae, and on the unproven assumption that production amplitudes have fixed singularities at

all negative integers. In fact, since the n-body threshold will be covered by moving cuts at all integral ℓ such that $\ell \leqslant 1 - n$, it is tempting to speculate that the 2-to-n production amplitude has its rightmost fixed pole at $\ell = 1 - n$.

7. K. J. Foley, R. S. Jones, S. J. Lindenbaum, W. A. Love, S. Ozaki, E. D. Platner, C. A. Quarles, and E. H. Willen, Phys. Rev. Letters 19, 330 (1967).

FIGURE CAPTIONS

Fig. 1. The s-plane of $a(\ell, s)$ for ℓ near ℓ_0, the position of a fixed pole.

Fig. 2. Some diagrams which give rise to moving cuts.

(a) One trajectory (α) and one particle (M) in the intermediate state.

(b) Two trajectories $(\alpha$ and $\bar{\alpha})$ in the intermediate state.

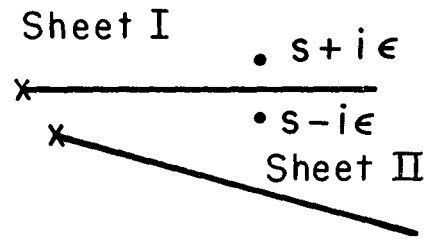

Fig. 1.

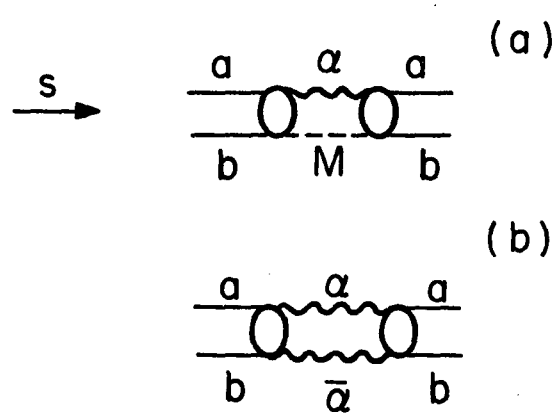

Fig. 2.

XBL678-3870

This report was prepared as an account of Government sponsored work. Neither the United States, nor the Commission, nor any person acting on behalf of the Commission:

A. Makes any warranty or representation, expressed or implied, with respect to the accuracy, completeness, or usefulness of the information contained in this report, or that the use of any information, apparatus, method, or process disclosed in this report may not infringe privately owned rights; or

B. Assumes any liabilities with respect to the use of, or for damages resulting from the use of any information, apparatus, method, or process disclosed in this report.

As used in the above, "person acting on behalf of the Commission" includes any employee or contractor of the Commission, or employee of such contractor, to the extent that such employee or contractor of the Commission, or employee of such contractor prepares, disseminates, or provides access to, any information pursuant to his employment or contract with the Commission, or his employment with such contractor.