UCRL-17770
c.2

University of California

Ernest O. Lawrence Radiation Laboratory

ACCURATE DETERMINATION OF THE IONIZATION ENERGY IN SEMICONDUCTOR DETECTORS

Richard H. Pehl, Fred S. Goulding,
Donald A. Landis, and Martin Lenzlinger

September 1967

TWO-WEEK LOAN COPY

This is a Library Circulating Copy which may be borrowed for two weeks. For a personal retention copy, call Tech. Info. Division, Ext. 5545

UCRL-17770 cy.3

DISCLAIMER

This document was prepared as an account of work sponsored by the United States Government. While this document is believed to contain correct information, neither the United States Government nor any agency thereof, nor the Regents of the University of California, nor any of their employees, makes any warranty, express or implied, or assumes any legal responsibility for the accuracy, completeness, or usefulness of any information, apparatus, product, or process disclosed, or represents that its use would not infringe privately owned rights. Reference herein to any specific commercial product, process, or service by its trade name, trademark, manufacturer, or otherwise, does not necessarily constitute or imply its endorsement, recommendation, or favoring by the United States Government or any agency thereof, or the Regents of the University of California. The views and opinions of authors expressed herein do not necessarily state or reflect those of the United States Government or any agency thereof or the Regents of the University of California.

Submitted to Nuclear Instruments and Methods

UCRL-17770
Preprint

UNIVERSITY OF CALIFORNIA

Lawrence Radiation Laboratory
Berkeley, California

AEC Contract No. W-7405-eng-48

ACCURATE DETERMINATION OF THE IONIZATION ENERGY IN SEMICONDUCTOR DETECTORS

Richard H. Pehl, Fred S. Goulding,
Donald A. Landis, and Martin Lenzlinger

September 1967

ACCURATE DETERMINATION OF THE IONIZATION ENERGY IN SEMICONDUCTOR DETECTORS

Richard H. Pehl, Fred S. Goulding
Donald A. Landis and Martin Lenzlinger

Lawrence Radiation Laboratory, University of California
Berkeley, California, September 1967

ABSTRACT

The average energy ϵ expended for electron-hole pair generation in silicon and germanium lithium-drifted detectors by gamma rays, electrons, and alpha particles has been measured as a function of temperature.

These data indicate that the difference between ϵ_α and ϵ_{e^-} in silicon is considerably less than previously reported, and in germanium $\epsilon_\alpha \sim \epsilon_{e^-}$.

Detector	Radiation	Temperature °K	ϵ eV/pair
Si	α	300	3.62 ±0.02
Si	e^-	300	3.67 ±0.02
Si	γ	300	3.67 ±0.02
Si	α	90	3.76 ±0.02
Si	e^-	90	3.81 ±0.02
Si	γ	90	3.81 ±0.02
Ge	α	90	2.96 ±0.04
Ge	e^-	90	2.96 ±0.02
Ge	γ	90	2.96 ±0.02

I. INTRODUCTION

Several years ago an Italian group[1] reported a rather large difference in the value of ϵ, the average energy required to produce an electron-hole pair, for alpha particles relative to electrons in silicon. Using 5.486-MeV alpha particles from ^{241}Am and 363.8-keV electrons from ^{113}Sn they found values of $\epsilon_\alpha = 3.61 \pm 0.01$ eV and $\epsilon_{e^-} = 3.79 \pm 0.01$ eV at a temperature of 300°K. Their data were obtained using surface-barrier detectors. Later Emery and Rabson[2] reported the same ϵ values at 300°K using a Li-drifted Si detector. The latter group extended the measurements over a wide temperature range, and also determined ϵ for germanium with gamma rays.

Since we felt it was rather difficult to account for such a large difference of the ionization energy (about 5% at 300°K and nearly 10% at 75°K) between alpha particles and electrons we have undertaken an extensive program of determining ϵ; either to convince ourselves that such a large difference really exists, or to obtain counter information. This included using higher energy particles - cyclotron produced - in addition to a number of sources, and with a much larger survey of detectors. In addition we felt our results would not require the long extrapolation to infinite field that the previous values have been based on since we could apply far higher bias than was done in the previous measurements.

More recently Klein[3] proposed to account for this difference by making a correction for backscattering effects on the data obtained using external electron sources. However, such a correction is not pertinent because, although many of the incident electrons are backscattered from the detector, these electrons produce a voltage signal that is in general much smaller than the signal of interest. Consequently the position of the full-energy electron peak is not appreciably displaced. If the difference in measured ionization yield were caused by backscattering one would expect to find a difference between gamma rays and electrons also. But, as will be shown, no such difference in the measured ionization yield is discernible.

II. EXPERIMENTAL SETUP

Our results are based on three separate experimental setups although all three setups use the same electronic scheme. Figure 1 is a block diagram of the entire electronic chain used, and fig. 2 shows a schematic diagram of the pulser-test capacitor system. The average energy per electron-hole pair can be expressed as $\epsilon = \frac{Ee}{Q}$, where E is the energy of the incident radiation, e is the electron charge, and Q is the charge created in the detector. Thus the goal is to compare the charge created in the detector with a known charge. The determination of this charge requires the measurement of the voltage step from the pulser and the calibration of the series test capacitor. This assumes that all the voltage from the pulser appears across the test capacitor - an assumption that will be justified below.

Calibration and evaluation of the pulser involved the following:

a) Calibration of the full scale voltage: The output voltage from the voltage source, powered by a 1.35V Hg battery, was adjusted by the calibration potentiometer R_1 to 1.000V, as measured by a digital voltmeter that reads to 10^{-4} V, and was calibrated and repeatedly checked against a zener diode reference source accurate to 0.001%.

b) Linearity and zero error: A discrepancy of about 1 part in 500 was observed between the ϵ value measured when the voltage step was about 23 mV compared with the value measured when the voltage step was about 220 mV. Such a discrepancy could arise because of either a zero error of about 50 μV or a nonlinearity of the 10K Dekapot. The linearity of this potentiometer was claimed to be ±0.01% with a resolution of 0.003%; our careful calibrations did not indicate any nonlinearity that could account for the observed discrepancy in the measured ϵ values. The Hg relay itself was apparently introducing a zero error since when the relay-charging capacitor system was changed to a configuration similar to the one used by Emery and Rabson[2] the discrepancy roughly doubled, and when the voltage source was increased by an order of magnitude to decrease the percentage zero error

[a reference zener diode (1N945) was used as the voltage source] the discrepancy was not greater than about 1 part in 2000 - not discernible within the precision of the measurement. For this measurement a capacitive attenuator placed immediately in front of the test capacitor reduced the voltage across the capacitor so that the 10K Dekapot could be operated at approximately the same position as when the Hg battery was the voltage source.

c) Pulse shape: No correction for decay of the pulse was necessary because a step function was generated. The Hg relay was mounted very close to the test capacitor (about 5 cm) thus eliminating any termination problems.

d) The pulser was operated at different frequencies, not synchronous with the power line frequency, thus eliminating the possibility of ripple adding synchronously with the signals.

e) Different pulse driver rates and widths were used to check for proper operation of the pulser system.

f) Both polystyrene and ceramic charging capacitors were used in the pulser to evaluate the chance of having any significant charge storage effects.

For the more extensive measurements upon which the bulk of this paper is based, a Vitramon VY12C porcelain capacitor with a nominal value of 0.5pF was mounted in a brass tube as shown in fig. 2; this construction provides a well shielded and stable unit. The test capacitor was directly connected to the gate lead of the FET (see fig. 1) through a BNC and about 4 cm of wire. Calibration of the capacitor was done on a 1620A General Radio bridge used in the three terminal mode. The calibration of the bridge was checked with a 1403K General Radio standard capacitor that had a known accuracy of 0.05%. This calibration was done a number of times during the course of the experiment, and no differences from the value of 0.2900 ±0.0005pF were measured.

To answer the question of whether essentially the entire voltage step was occurring across the test capacitor, the effective input capacity of the preamp was measured. Since a 35pF load caused about a 0.7% change in the gain, the effective input capacity was about 5000pF. The error introduced by assuming that the entire voltage step occurred across the test capacitor is about 0.29 parts in 5000; thus this introduces a negligible error in the determination of test capacitor charge.

For the preliminary measurements made at the cyclotron a test capacitor of 4.338pF was used, and a test capacitor of 0.767pF was used for the preliminary measurements with an alpha particle source.

A new high-resolution, high-rate preamp, amplifier system was used[4]. This system provides a Gaussian-shaped pulse that peaks at 2.25 μsec, which should be sufficient to make the ballistic deficit negligible. Although no switching of the shaping time constant is provided in this amplifier, when brief tests were made on other amplifiers the apparent value of the charge collected did not increase when the time constant was lengthened to 5 μsec. The signal then went through a bias amplifier, and was recorded in a 1024 channel pulse height analyzer.

The test chamber was maintained at high vacuum ($\sim 10^{-8}$ mmHg) by a diffusion pump equipped with a liquid-nitrogen trap. Cooling of the detector was obtained from a cold finger into which liquid nitrogen was usually placed; for the warmer measurements on the Si detectors solid CO_2 + acetone was used. A power transistor served as the adjustable heat source that maintained the detector at whatever temperature desired. The different temperatures were measured with a calibrated thermocouple. Since the thermocouple could not be placed in direct contact with the detector during the actual experiment the temperatures recorded may be somewhat in error. However, when the thermocouple was placed in direct contact with a Si detector for temperature cali-

bration, consistent readings were obtained within a few degrees, and the additional thermal load of the thermocouple itself could account for the small difference. The repeatability of the detector temperature relative to the thermocouple reading over a period of several months appeared to be perfect because the variation of detector leakage current as a function of thermocouple reading was very reproducible.

III. MEASUREMENTS

Our first experiment was done at the Berkeley 88-inch variable energy cyclotron several years ago, and must be considered a preliminary measurement. At the time the detector temperature could not be varied - all measurements were consequently made at room temperature, about 290 °K. Beams of 24 and 30-MeV alpha particles were measured with Li-drifted Si detectors of both 1 and 2 mm thicknesses; in addition a diffused-junction Si detector was used for the 24-MeV alpha particles.

Unfortunately, the cyclotron beam energy cannot be measured accurately enough to be used as a primary standard. However, by looking at the difference between two well known energy levels one can obtain an energy difference that is relatively independent of the beam energy. For example, we observed the scattered alpha beam at 20 deg. from a thin ^{12}C target, and used the energy difference between the ground state and the first excited level at 4.433 MeV. Assuming our beam energy is 30.0-MeV when in reality it is 30.5-MeV, (and from a combination of magnet calculations and range-energy measurements we certainly should know the beam energy to within 1%) we may ask what error is introduced into the supposed energy difference. With 30-MeV incident alpha particles the energy difference is 4.429 MeV, whereas this difference is 4.427 MeV if the incident alpha particles are 30.5 MeV. Thus our energy accuracy is better than 1 part in 2000 -

probably much better.

One can go through a similar argument to show that we undoubtedly know the scattering angle with sufficient accuracy to essentially eliminate any kinematic factor. Furthermore, the target was sufficiently thin that for the incident energies used, scattered particles corresponding to the ground state and the 4.433-MeV level were degraded in energy almost the same small extent. The result of this experiment was $\epsilon_\alpha = 3.64 \pm 0.02$ eV.

The second experiment was also done several years ago using the same series of detectors used at the cyclotron, but with a ^{228}Th source that provides alpha particles of eight different energies ranging from 5.344 to 8.785 MeV. These measurements, which were also made at room temperature, were consistent with the cyclotron data.

The rest of this discussion will be concerned with the third, and by far the most extensive experiment, which is still being actively pursued. The first part of these data are based on two Li-drifted Si detectors that have been studied over a temperature range from 90° to 250°K; and with electrons from 114.86 keV (^{57}Co) up to 1048.1 keV (^{207}Bi), 121.97 keV gamma rays (^{57}Co), and alpha particles from 5.344 to 8.785 MeV (^{228}Th and ^{241}Am). We were able to apply 1000V bias, and found that ϵ did not differ when we used 700 or 1000V, therefore no extrapolation to infinite field has been necessary.

To make an accurate comparison of ϵ_α to ϵ_{e^-} the "window thickness" between the incident radiation and the active volume of the detector must be accurately determined. As described in the following, three different methods of measuring the "window" have been used. Since we observed 12-keV resolution from the alpha particle source, as illustrated in fig. 3, the total "window" could not be more than 0.2μ of Si equivalent, when other factors influencing resolution are accounted for. The "window" thickness measured by observing the variation of pulse height with the angle of incidence of alpha particles

was also about 0.2μ. A window of this order was also measured by observing the position of the e_K electron conversion peaks from ^{57}Co. Figure 4 shows a ^{57}Co spectrum that demonstrates this measurement. Since the binding energy of the K electron in Fe is 7.114 keV one would observe this energy difference between the gamma ray peaks and their respective e_K conversion peaks if the detector and source were absolutely "windowless". (This assumes $\epsilon_{e^-} = \epsilon_\gamma$, a most logical assumption, and as will be shown, our data strongly support this hypothesis. A correction must also be made for the applied bias. In the case shown a negative bias of 1000V shifts the electron peaks by 19 channels to the left because of the repulsion.) If 0.2μ of Si equivalent were between the ^{57}Co source and the active volume of the detector the e_K electrons would be degraded in energy by about 0.2 keV. This corresponds to displacing the center of their peaks by four channels. Since the resolution of the e_K electrons was about 21 channels (1.1 keV), and the resolution of the 121.97-keV gamma ray was about 19 channels (1.0 keV) a relative shift of four channels is easily discernible. Unfortunately the intensity of the 136.33-keV gamma ray is insufficient to allow an equally precise determination from it and its corresponding e_K electron peak, however, it does provide a useful cross check.

A "window" of 0.2μ of Si equivalent would increase the value of ϵ_α by at most 0.02 eV. Since we obtained the same ϵ_α at 700V bias as at 1000V the window contribution from the Si itself was completely negligible, as shown by the following calculation. We will assume the detector is operating with sufficient bias to be almost totally depleted but a thin layer of the original p-type Si is present near the entrance face. The effect of increasing the bias from 700 to 1000V will be to deplete part of this thin layer of p-type Si, and we wish to know how much the boundary of the depleted region will advance toward the entrance face. The calculated capacity of a 3 mm thick plane parallel silicon detector when operated in a totally

depleted mode is $3.5 pF/cm^2$ and, therefore, a change of 300V causes a charge Q to flow through this capacity where:

$$Q = CV = (3.5 \times 10^{-12}\ F)\ (300V) = 10.5 \times 10^{-10}\ Coul.$$

Since the acceptor concentration of the original p-type Si was about 10^{13} acceptors/cm^3 the acceptor concentration in the assumed thin layer of p-material cannot be more than this. If a thickness t of this Si is depleted the charge removed must be:

$$(10^{13}\ acceptors/cm^3)\ (1.6 \times 10^{-18}\ Coul/acceptor)\ t.$$

Equating this to Q we find the thickness of Si that would be depleted by the additional 300V is 6.5μ. But the measured "window" was the same at 700 and 1000V bias so even at 700V there apparently was no window contribution from the Si itself.

Our best resolution on the 975.57-keV electrons from ^{207}Bi was 2.3 keV at 200°K. The electronic resolution was 1.4 keV under those conditions. At 90°K the electronic resolution was 600 eV.

Figures 5 and 6 summarize our results on Si. Neglecting possible unknown systematic errors the accuracy of each individual measurement is encompassed within the circles around each point. The data shown were obtained over a period of about three months; points obtained from a series of measurements made without any intervening system change show even less spread. Over the temperature range studied ϵ appears to be a linear function of the temperature. Since the variation of the forbidden energy gap, E_g, with temperature (obtained from absorption measurements) is not a linear function[5], if our ϵ data are plotted vs. E_g (see fig. 7) one does not obtain a linear relationship as would be expected from a simple model. Making a short linear extrapolation to 300°K, we obtain $\epsilon_\alpha = 3.625 \pm 0.02$ eV, in excellent agreement with the published values[1,2,6,7], and our cyclotron data. This value does not include any "window" correction,

but as stated earlier such a correction is less than 0.02 eV.

However, the same extrapolation to 300°K results in $\epsilon_{e^-} = 3.67 \pm 0.02$ eV, considerably lower than the published values[1,2]. The errors placed on our values are based on an estimate of systematic errors; since the same system was used for determining ϵ_α and ϵ_{e^-} the difference between these values should be determined very accurately. Thus it now appears that, although there may be a slight difference between ϵ_α and ϵ_{e^-}, this difference appears to be of the order of 1% instead of 5%.

Figure 8 compares our ϵ_{e^-} data against the published values[2] as a function of temperature. Note that not only are the ϵ_{e^-} values we have measured lower, but the rate of change of ϵ_{e^-} is less. This difference is more marked at colder temperatures, indicating that an appreciable amount of charge may have been trapped in the previous work. As can be seen from figs. 5, 6 and 7 we find that the rate of change of ϵ as a function of temperature is the same for electrons and alpha particles, whereas the previous work[2] gave a considerably greater rate of change for electrons than for alpha particles. In fact, for ϵ_α we not only agree in absolute value but also in rate of change with the previous work.

In the second part of this experiment, one of our "thin window" Ge detectors[8] was used in the same system. This detector was studied over a temperature range from 90° to 180°K, and with the same sources used for the Si detectors; in addition, gamma rays of 1173.23 and 1332.48 keV from a ^{60}Co source were used. Once again the ability to apply a high bias, greater than 2000V, eliminated the need of extrapolating to infinite field. Figure 9 shows a spectrum of the 1063.58-keV gamma ray and its corresponding K, L and M internal conversion electrons from a ^{207}Bi source. The window was sufficiently thin that these relatively high energy electrons were not appreciably degraded - as shown by the excellent

resolution and the proper energy displacement from the gamma ray peak. However, obtaining a window that was thin enough to provide consistently high calibre data from an alpha particle source proved to be a difficult problem. It has not been possible to maintain as thin a window as one would like, but good alpha particle data has nevertheless been obtained[9]. Figure 10 presents an alpha particle spectrum observed when the window was a minimum. The 14-keV resolution indicates that the "window" was only slightly greater than the "window" present on the Si detectors. Thus we should be able to make a fairly accurate comparison of ϵ_α to ϵ_{e-} in Ge.

Figures 11 and 12 summarize our results on Ge. Although the accuracy of each individual measurement for electrons and gamma rays is equal to that obtained from the Si detectors, the Ge data showed additional fluctuation when the system was opened, and the Ge detector was given a new surface treatment. Such an operation caused the measurement to vary by as much as 0.01 eV, although the total spread introduced by a series of surface treatments was not more than 0.01 eV. The Si detectors did not undergo any surface treatments during the course of the experiment. A window correction of about 0.02 eV is included for the alpha particle data; such a correction is needed to make the treatment of the alpha particle data in Si and Ge equivalent. No window correction has been made to the electron data plotted since only points from ^{207}Bi are shown, and the energy of these electrons is sufficiently high to make a window correction negligible. For any given run there was no difference (less than 0.002 eV) between the value of ϵ measured for electrons and gamma rays.

Over the temperature range studied ϵ in Ge does not appear to be a linear function of temperature as was the case for Si. In fact, the degree of nonlinearity results in a linear relationship between ϵ and the published variation of E_g[5] for Ge within the

accuracy of our data as illustrated in fig. 13. Making a short extrapolation to 77°K we obtain $\epsilon = 2.97 \pm 0.02$ eV for both electrons and gamma rays, in excellent agreement with the published values[2,10]. For alpha particles we find the same ϵ value as for electrons although the additional "window" problem makes these data less precise. To reduce the window problem, and to further the general investigation, ϵ in Ge will soon be measured using long-range particles at the cyclotron.

IV. SUMMARY

These results indicate that in Si there may be a slight difference between ϵ_α and ϵ_{e-}, but this difference appears to be of the order of 1% instead of 5% as previously reported[1,2]. Why our data exhibit much less difference has not been resolved. However, preferential hole trapping could account for the observed difference. When an alpha particle source is used the holes do not have to travel as far as they do when an electron source is used, consequently there is more chance of the holes being trapped in the latter case. This would decrease the amount of charge collected for the incident electrons, and the apparent value of ϵ that is measured would increase. Since our initial measurements on Ge indicate that $\epsilon_\alpha \sim \epsilon_{e-}$ one is lead to suspect that $\epsilon_\alpha \sim \epsilon_{e-}$ in Si also, and that the differences that have been observed are not fundamental. However, the data for Ge are not precise enough at present to use as a conclusive point against the Si results.

The fact that the relationship between ϵ and E_g apparently is linear for Ge whereas it is not linear for Si is rather surprising, and certainly worthy of more study.

V. ACKNOWLEDGEMENTS

We wish to express our thanks to R. Cordi for construction and testing of the mechanical system, to G. Saucedo for fabrication of the Ge detector, and to R. Lothrop for the Si detectors. W. Hansen, J. Walton, and H. Pugh provided valuable discussions.

REFERENCES

1) C. Bussolati, A. Fiorentini, and G. Fabri, Phys. Rev. 136 (1964) A1756.

2) F. E. Emery and T. A. Rabson, Phys. Rev. 140 (1965) A2089.

3) C. A. Klein, J. Phys. Soc. Japan 21 (supplement) (1966) 307.

4) F. S. Goulding, D. A. Landis and R. H. Pehl, The Design and Performance of a High-Resolution High-Rate Amplifier System for Nuclear Spectrometry, Lawrence Radiation Laboratory Report UCRL-17560, May 1967.

5) R. A. Smith, Semiconductors (Cambridge University Press, New York, 1959) p. 351-352.

6) E. Baldinger, J. Gutmann, and G. Matile, Z. Angew. Math. Phys. 15 (1964) 90.

7) G. Fabri, E. Gatti, and V. Svelto, Phys. Rev. 131 (1963) 134.

8) F. S. Goulding and B. V. Jarrett, A Method of Making Thin-Window Germanium Detectors, Lawrence Radiation Laboratory Report UCRL-16480, January 1966.

9) R. H. Pehl, G. I. Saucedo, and R. C. Cordi, to be published.

10) S. O. W. Antman, D. A. Landis, and R. H. Pehl, Nucl. Instr. and Meth. 40 (1966) 272.

FIGURE CAPTIONS

Fig. 1. Block diagram of the electronic equipment.

Fig. 2. Schematic diagram of the pulser-test capacitor system.

Fig. 3. Example of an alpha particle energy spectra from a ^{228}Th source. The broadening of the higher energy peaks is caused by the additional effective source thickness seen by alpha particles emitted later in the decay chain due to the recoil of the daughter nuclei. However, this additional source thickness is not sufficient to introduce any measurable nonlinearity into an energy vs. channel number plot over the energy range observed. The pulser peaks were recorded simultaneously with the alpha particles.

Fig. 4. Example of an energy spectra from a ^{57}Co source. Since the binding energy of the K electron in Fe is 7.114 keV one would observe this energy difference between the gamma ray peaks and their respective e_K electron conversion peaks if the detector and source were absolutely "windowless". The resolution of the e_K electron conversion peaks was 1.1 keV, and the resolution of the 121.97-keV gamma ray peak was 1.0 keV.

Fig. 5. Ionization energy for electrons and gamma rays in Si as a function of temperature.

Fig. 6. Ionization energy for alpha particles in Si as a function of temperature.

Fig. 7. Ionization energy in Si as a function of the forbidden energy gap.

Fig. 8. Comparison of our ionization energy data for electrons in Si against the published values.

Fig. 9. Partial energy spectrum from a ^{207}Bi source showing the 1063.58-keV gamma ray and its corresponding K, L and M internal conversion electrons. It is interesting to note that the 1.8 keV resolution for the 975.57-keV electrons is slightly better than we have ever observed with a Si detector.

Fig. 10. Partial alpha particle energy spectrum from a ^{228}Th source. During the course of the experiment the "window" on the Ge detector was usually greater than when this spectrum was obtained, consequently the typical resolution varied from 16 to 20 keV. However, the data presented in fig. 12 are based on spectra obtained under conditions equal to what is shown here. The broadening of the higher energy peaks is caused by the additional effective source thickness seen by alpha particles emitted later in the decay chain due to the recoil of the daughter nuclei.

Fig. 11. Ionization energy for electrons and gamma rays in Ge as a function of temperature.

Fig. 12. Ionization energy for alpha particles in Ge as a function of temperature. A window correction of 0.02 eV has been included.

Fig. 13. Ionization energy in Ge as a function of the forbidden energy gap.

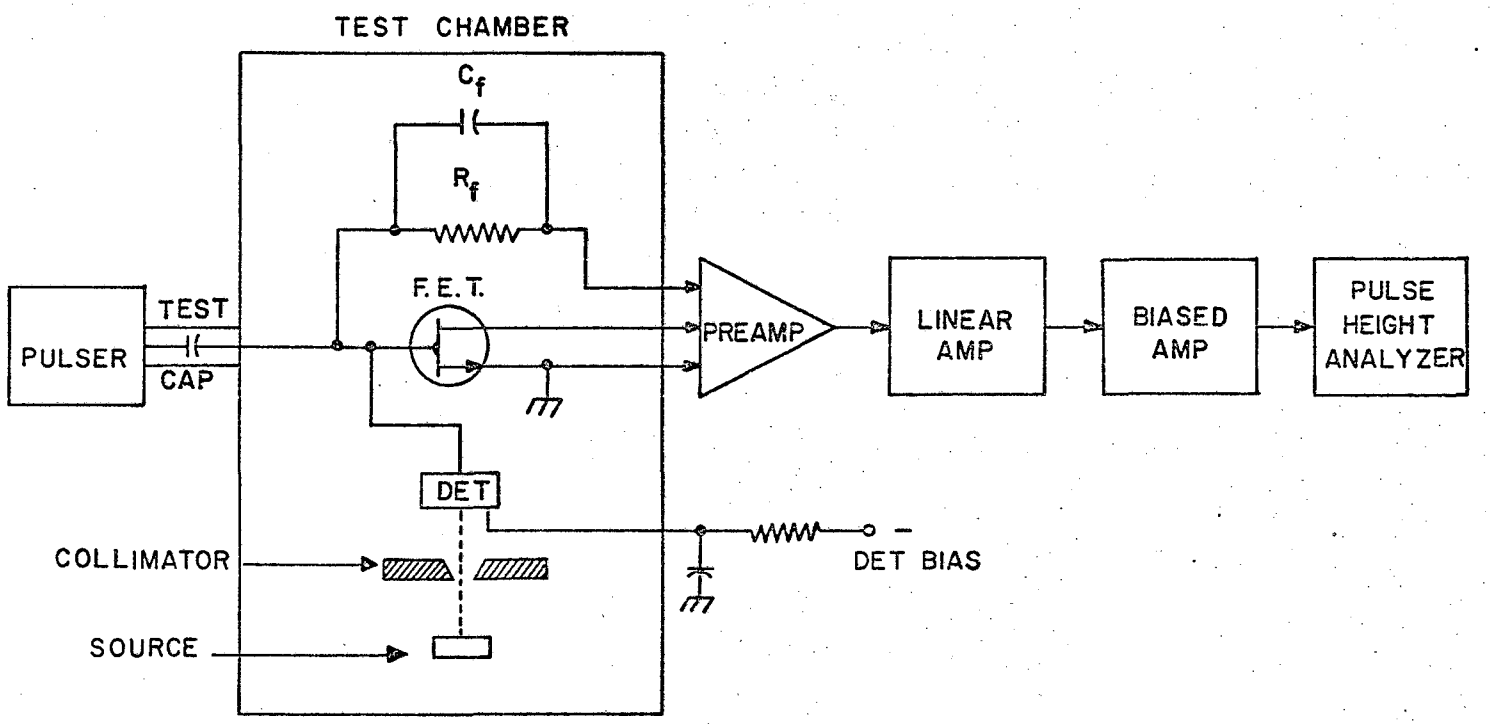

XBL 679-4887

Fig. 1

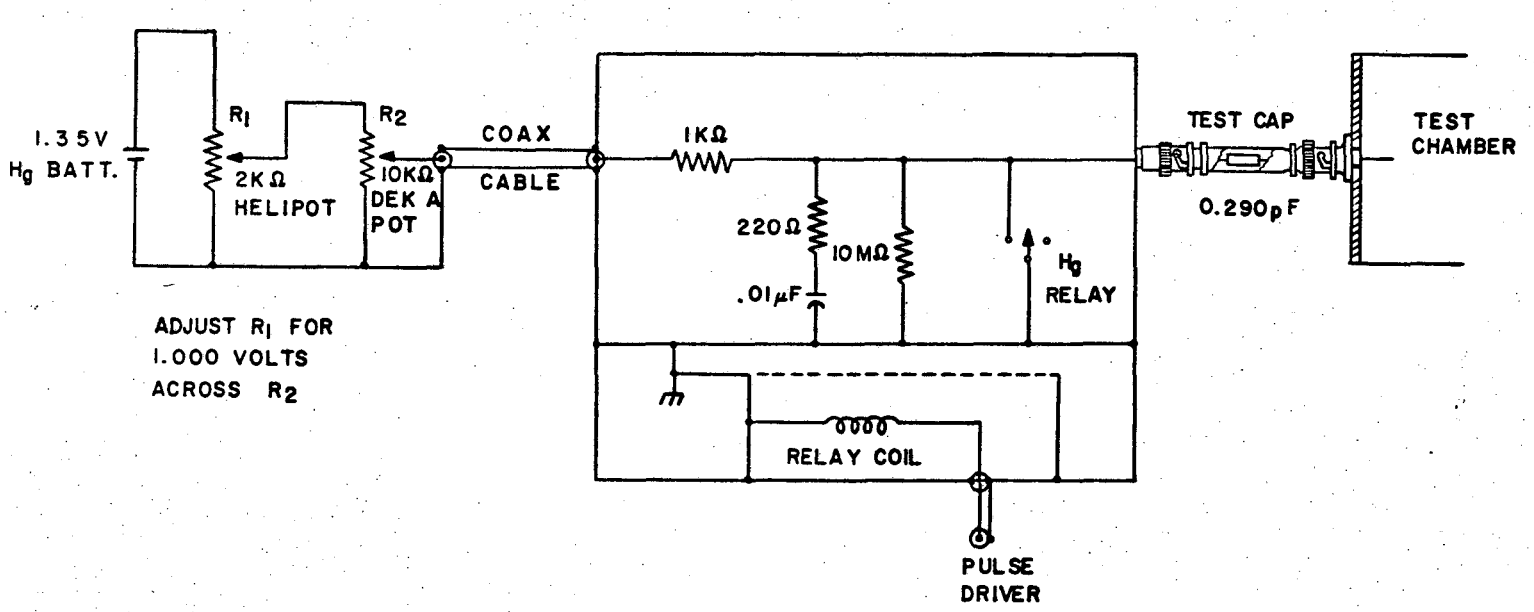

XBL 679-4888

Fig. 2

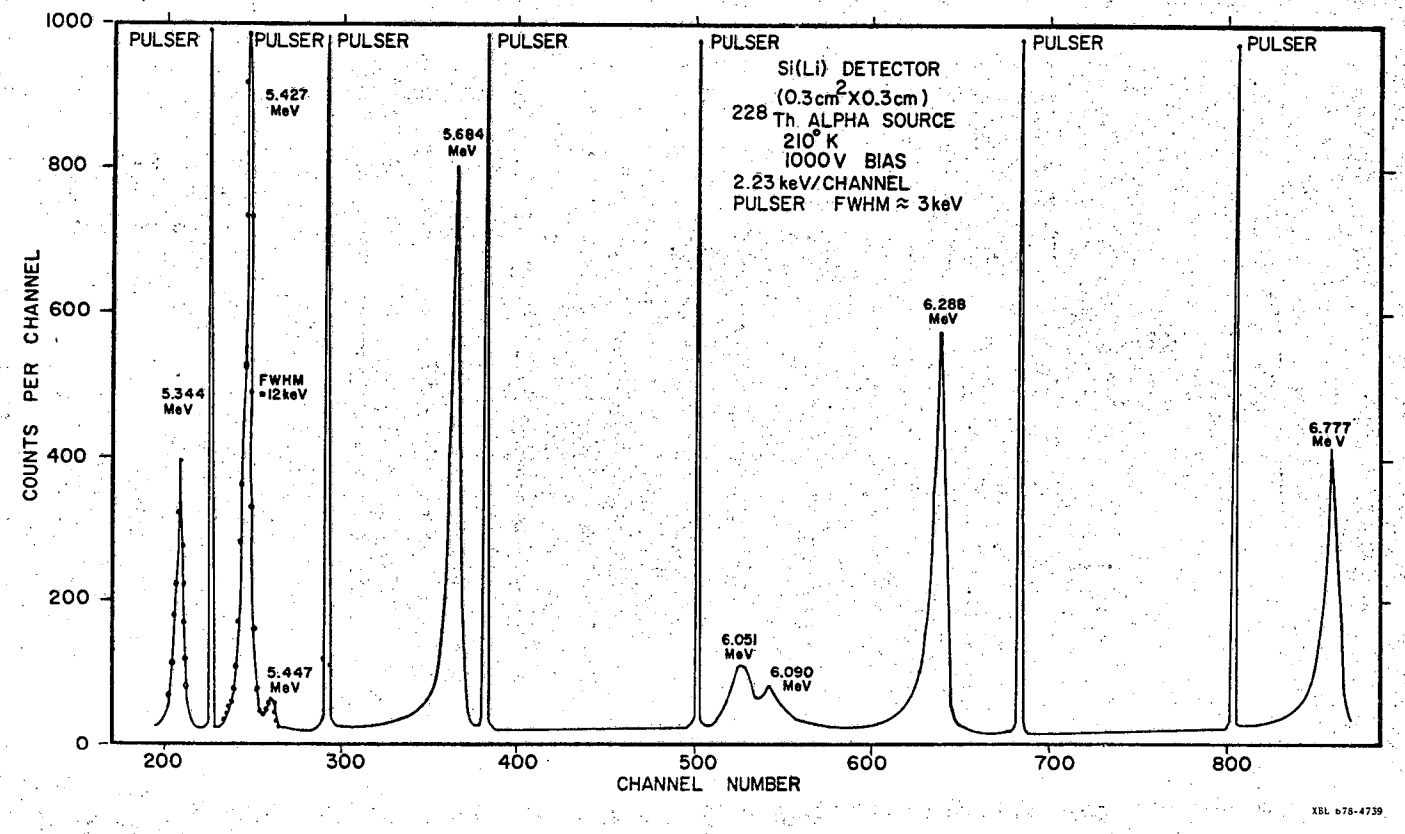
PULSER
PULSER
PULSER
PULSER
PULSER
PULSER
PULSER
Si(Li) DETECTOR
(0.3cm²X0.3cm)
228 Th ALPHA SOURCE
210° K
1000V BIAS
2.23 keV/CHANNEL
PULSER FWHM ≈ 3keV
5.344 MeV
5.427 MeV
FWHM ≈12keV
5.447 MeV
5.684 MeV
6.051 MeV
6.090 MeV
6.288 MeV
6.777 MeV
COUNTS PER CHANNEL
CHANNEL NUMBER
0
200
400
600
800
1000
200
300
400
500
600
700
800
XBL 678-4739

Fig. 3

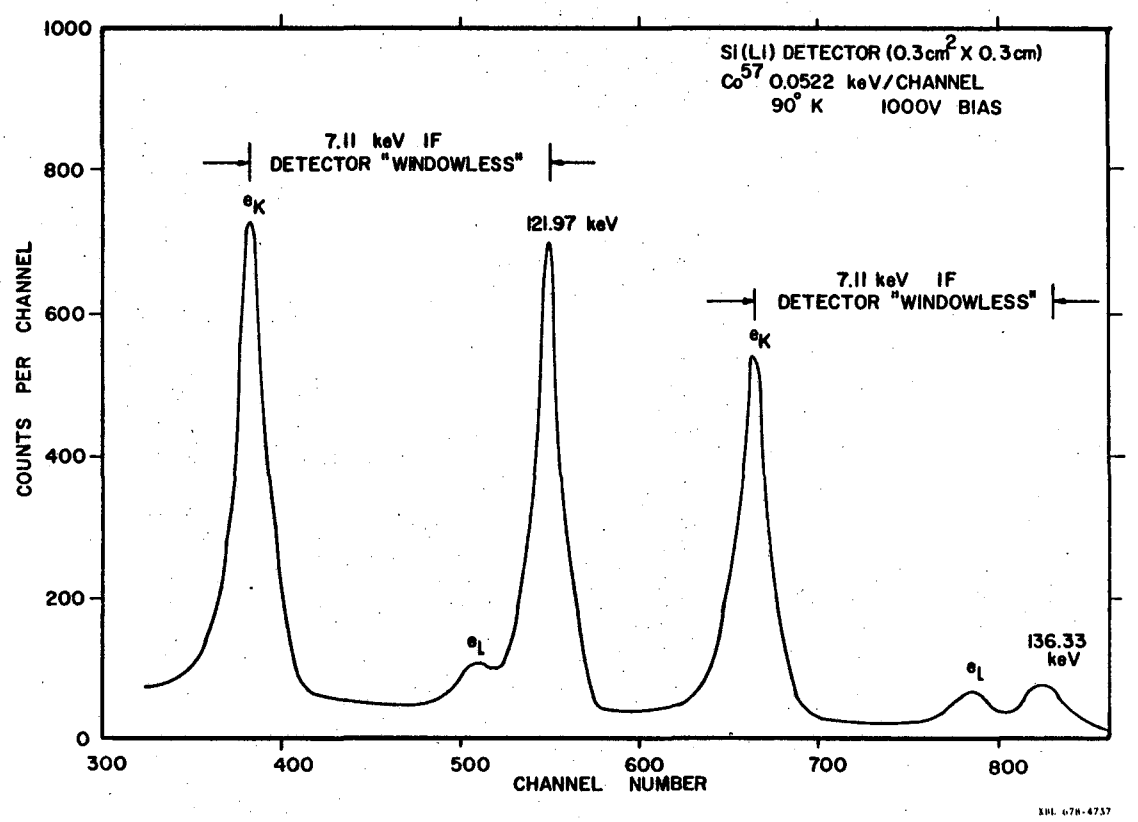
SI(LI) DETECTOR (0.3cm² X 0.3cm)
Co57 0.0522 keV/CHANNEL
90° K 1000V BIAS
7.11 keV IF
DETECTOR "WINDOWLESS"
eK
121.97 keV
7.11 keV IF
DETECTOR "WINDOWLESS"
eK
eL
eL
136.33
keV
COUNTS PER CHANNEL
1000
800
600
400
200
0
300
400
500
600
700
800
CHANNEL NUMBER

Fig. 4

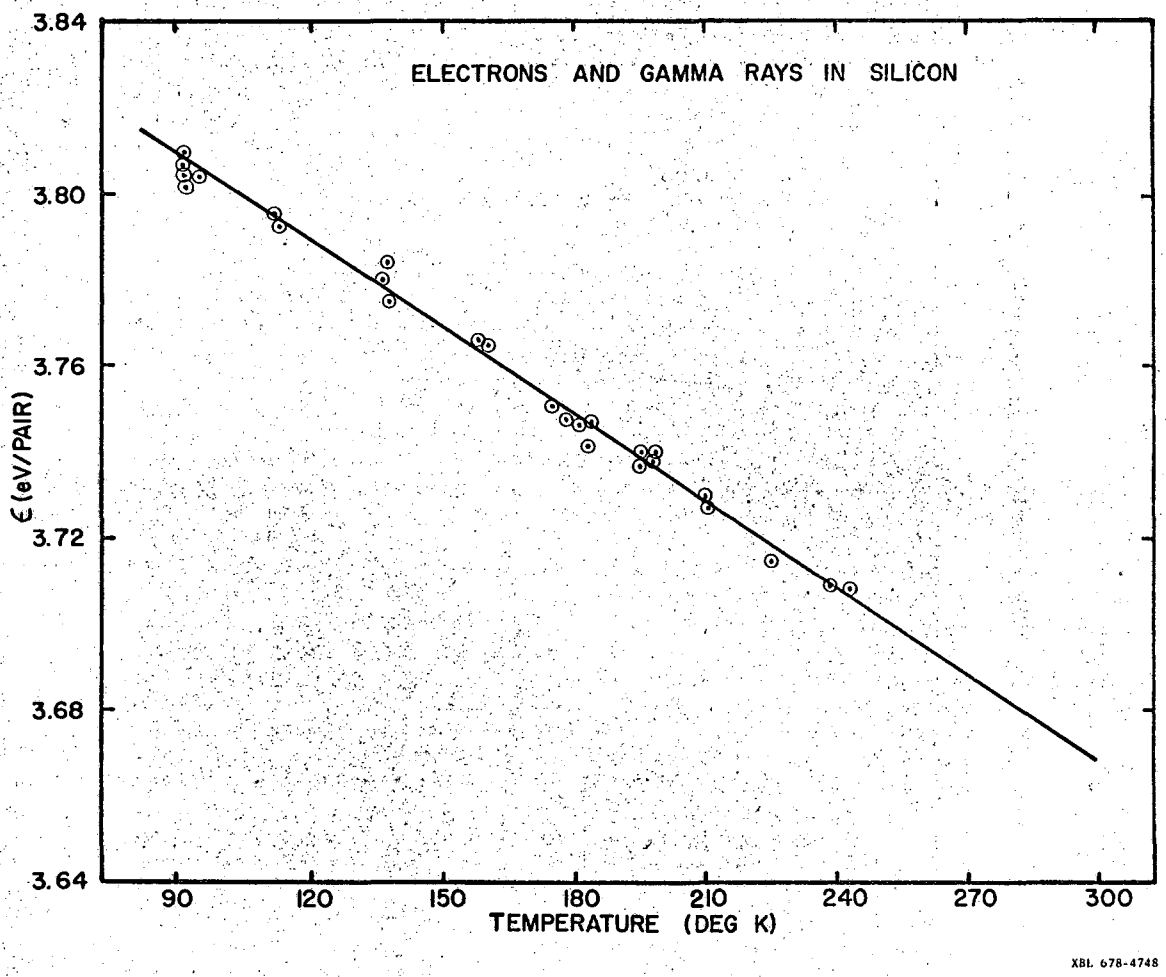
ELECTRONS AND GAMMA RAYS IN SILICON
3.84
3.80
3.76
3.72
3.68
3.64
ε (eV/PAIR)
90
120
150
180
210
240
270
300
TEMPERATURE (DEG K)
XBL 678-4748

Fig. 5

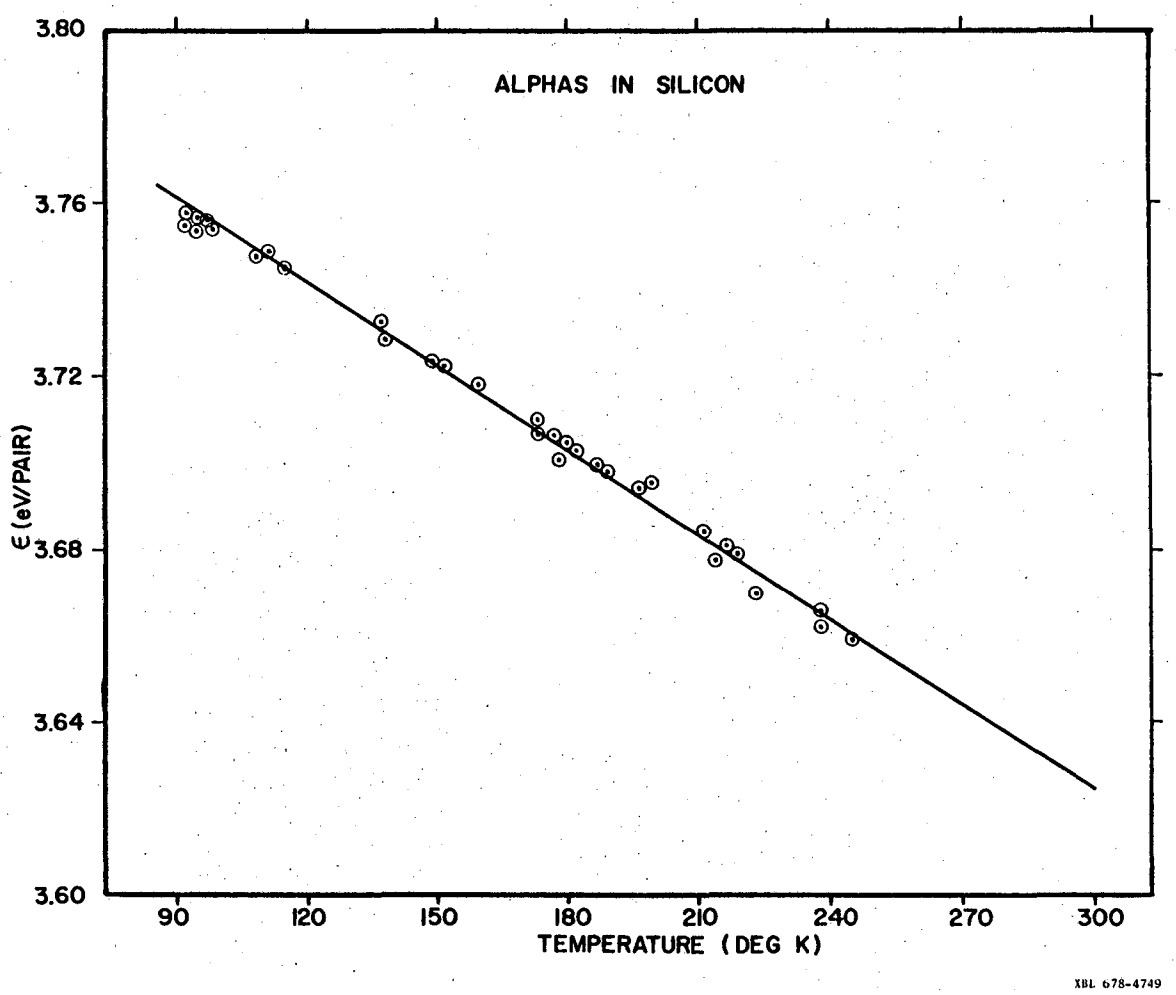
ALPHAS IN SILICON
3.80
3.76
3.72
3.68
3.64
3.60
ε (eV/PAIR)
90
120
150
180
210
240
270
300
TEMPERATURE (DEG K)
XBL 678-4749

Fig. 6

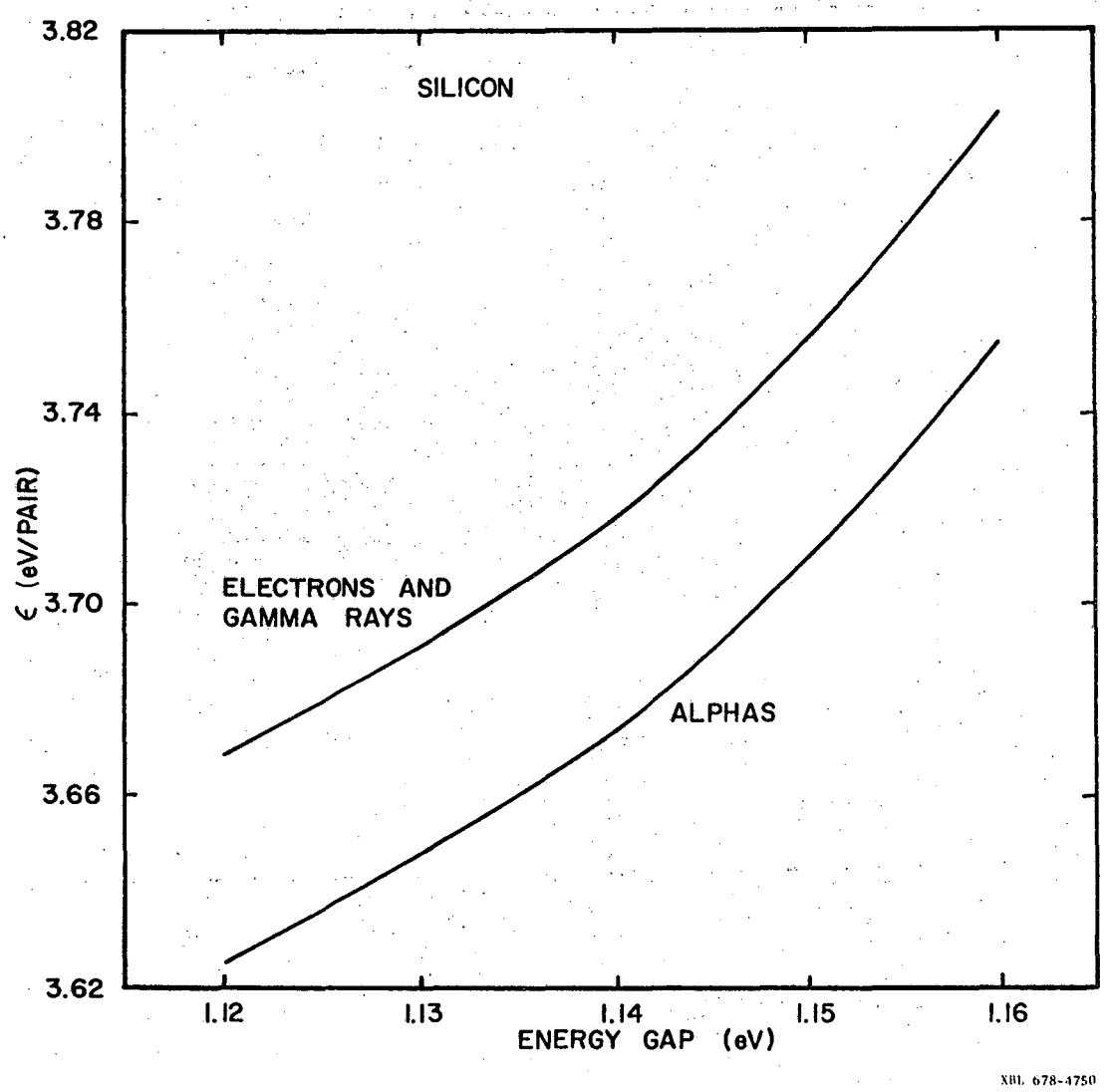
SILICON
ELECTRONS AND
GAMMA RAYS
ALPHAS
3.82
3.78
3.74
3.70
3.66
3.62
ϵ (eV/PAIR)
1.12
1.13
1.14
1.15
1.16
ENERGY GAP (eV)
XBL 678-4750

Fig. 7

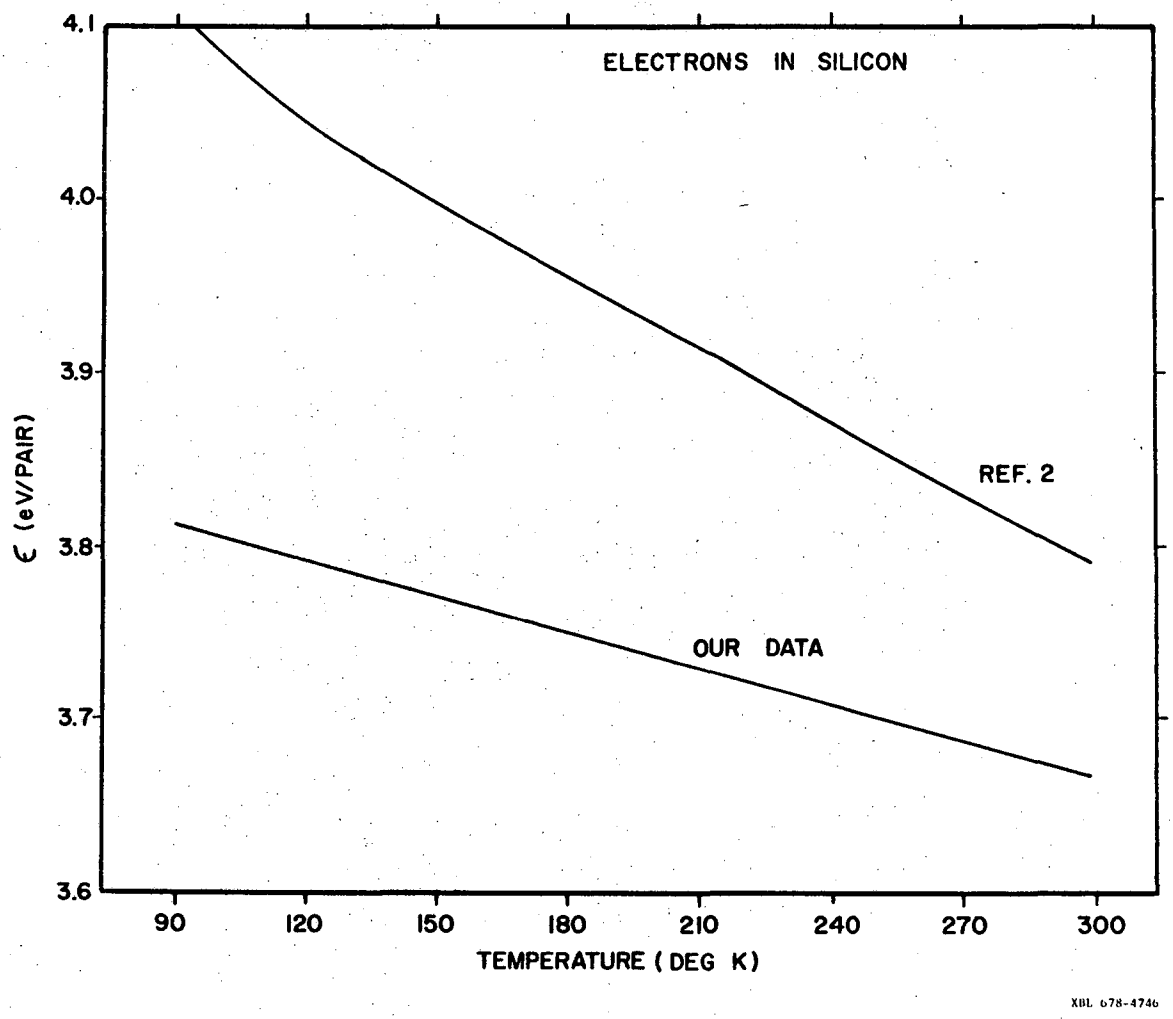
ELECTRONS IN SILICON
REF. 2
OUR DATA
ε (eV/PAIR)
4.1
4.0
3.9
3.8
3.7
3.6
90
120
150
180
210
240
270
300
TEMPERATURE (DEG K)
XBL 678-4746

Fig. 8

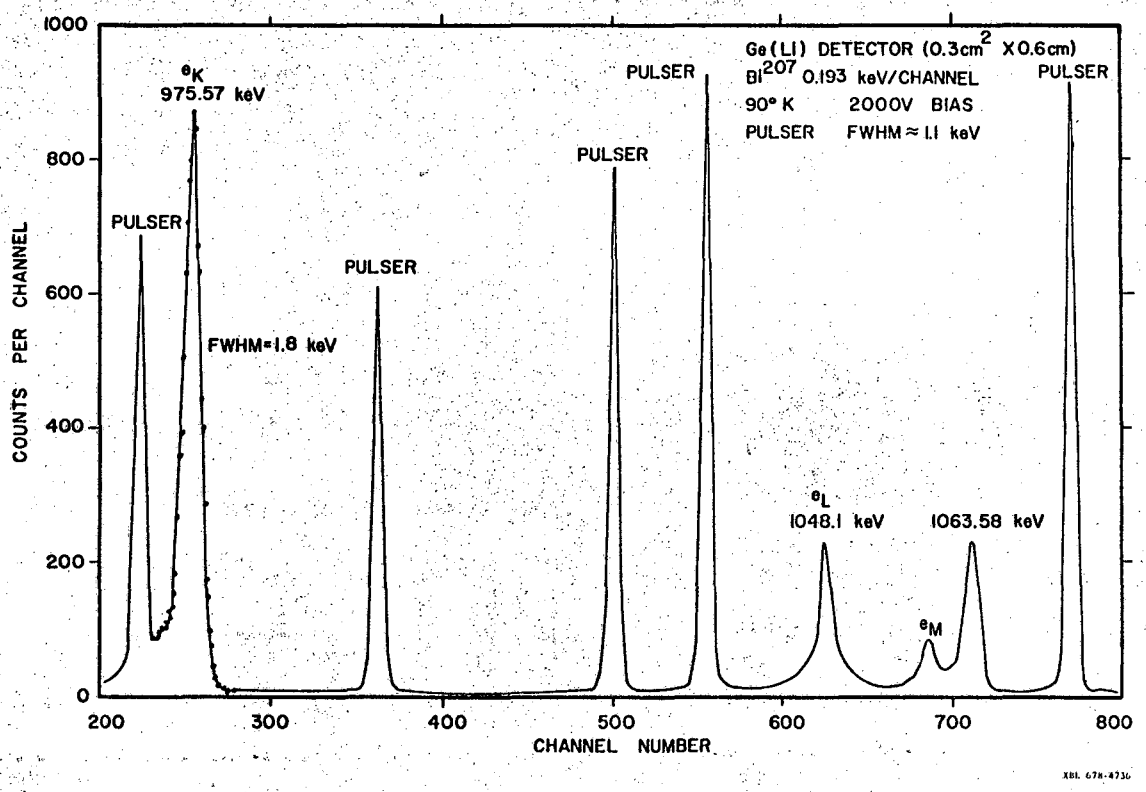
Ge(Li) DETECTOR (0.3cm² X 0.6cm)
Bi²⁰⁷ 0.193 keV/CHANNEL
90° K 2000V BIAS
PULSER FWHM ≈ 1.1 keV
eK
975.57 keV
FWHM=1.8 keV
PULSER
PULSER
PULSER
PULSER
PULSER
eL
1048.1 keV
1063.58 keV
eM
COUNTS PER CHANNEL
CHANNEL NUMBER
0
200
400
600
800
1000
200
300
400
500
600
700
800

Fig. 9

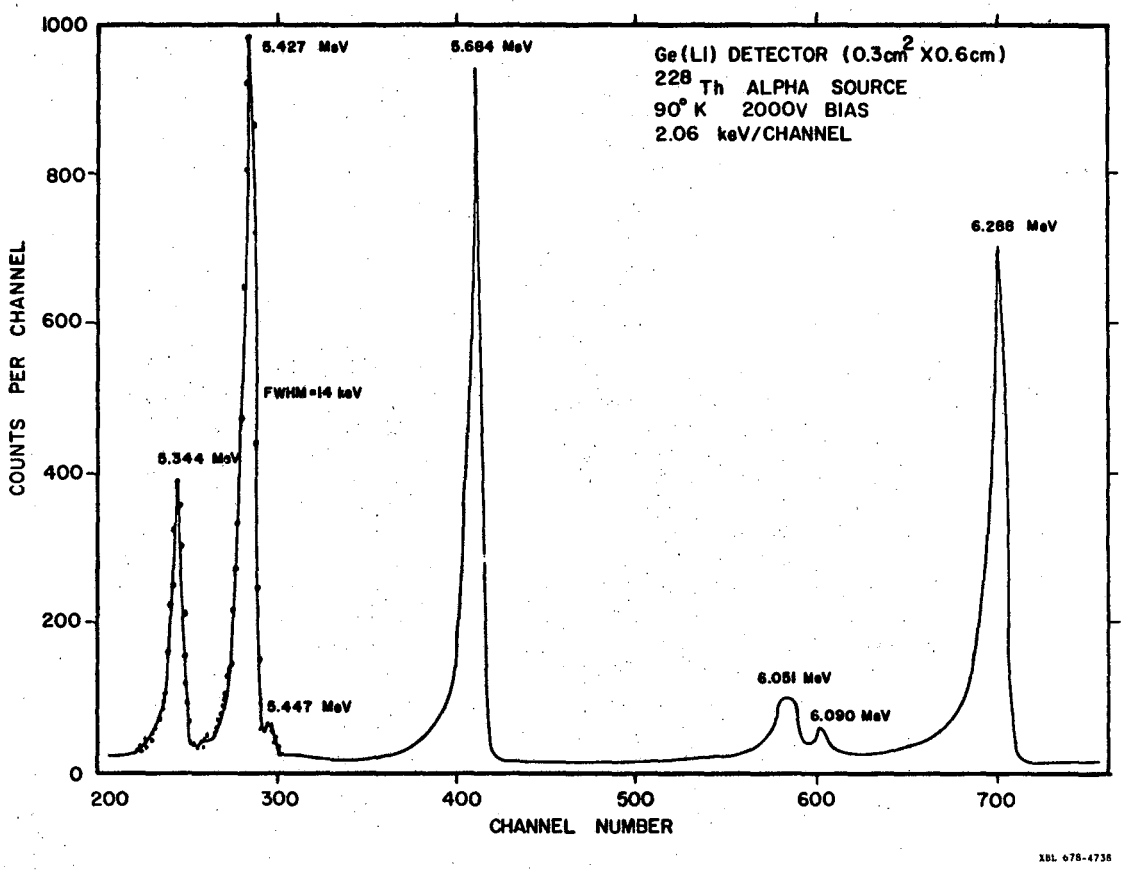
Ge(LI) DETECTOR (0.3cm² X0.6cm)
228 Th ALPHA SOURCE
90° K 2000V BIAS
2.06 keV/CHANNEL
5.427 MeV
5.684 MeV
6.288 MeV
FWHM=14 keV
5.344 MeV
5.447 MeV
6.051 MeV
6.090 MeV
COUNTS PER CHANNEL
CHANNEL NUMBER
0
200
400
600
800
1000
200
300
400
500
600
700
XBL 678-4738

Fig. 10

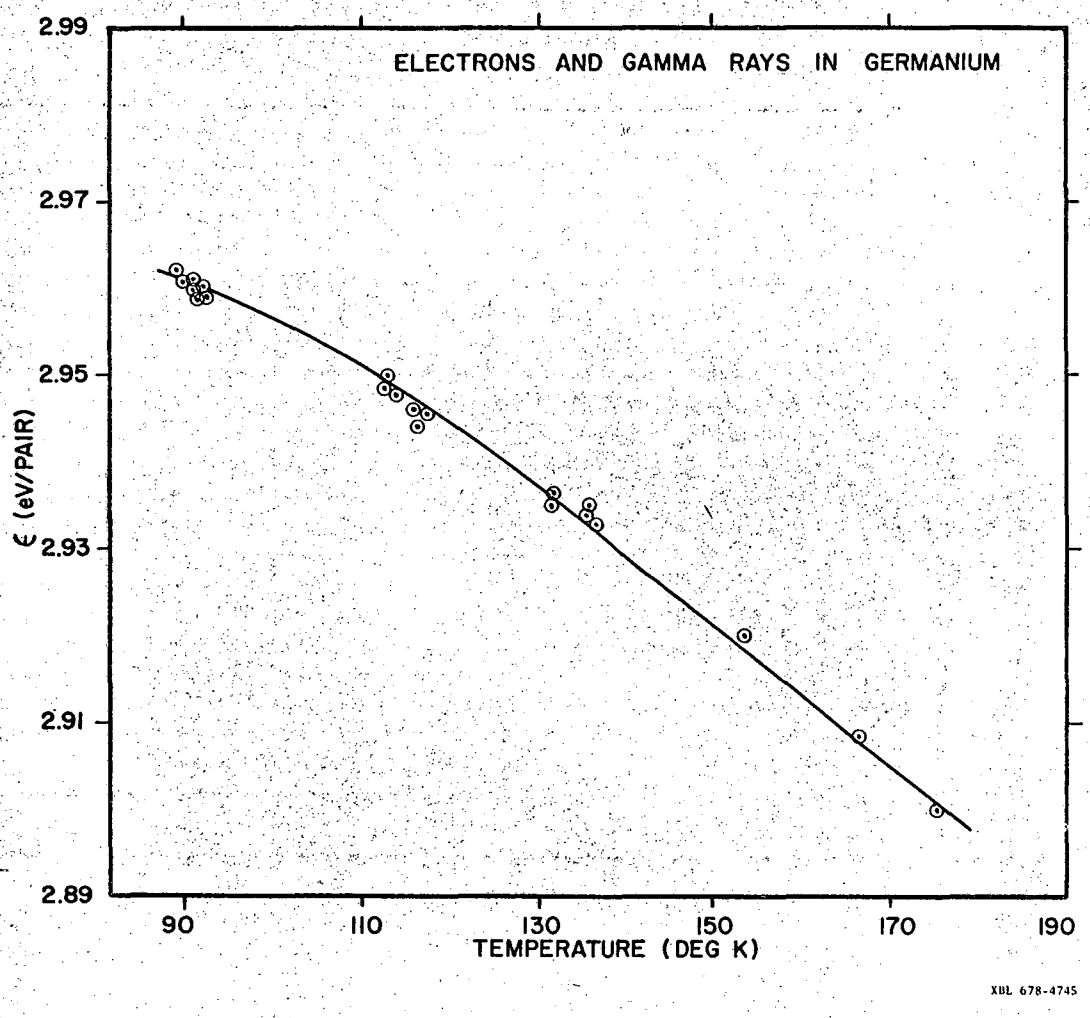
ELECTRONS AND GAMMA RAYS IN GERMANIUM
2.99
2.97
2.95
2.93
2.91
2.89
ε (eV/PAIR)
90
110
130
150
170
190
TEMPERATURE (DEG K)
XBL 678-4745

Fig. 11

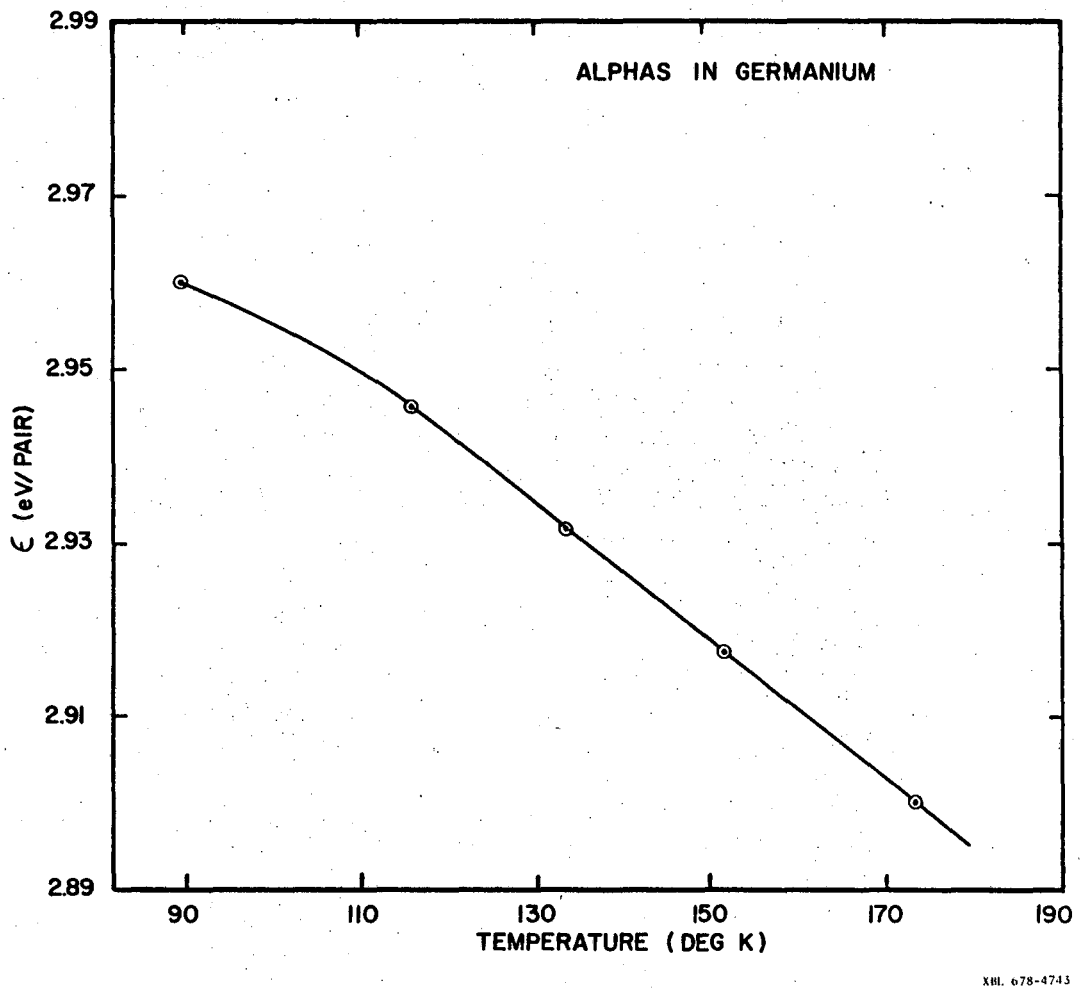
ALPHAS IN GERMANIUM
2.99
2.97
2.95
2.93
2.91
2.89
ϵ (eV/PAIR)
90
110
130
150
170
190
TEMPERATURE (DEG K)
XBL 678-4743

Fig. 12

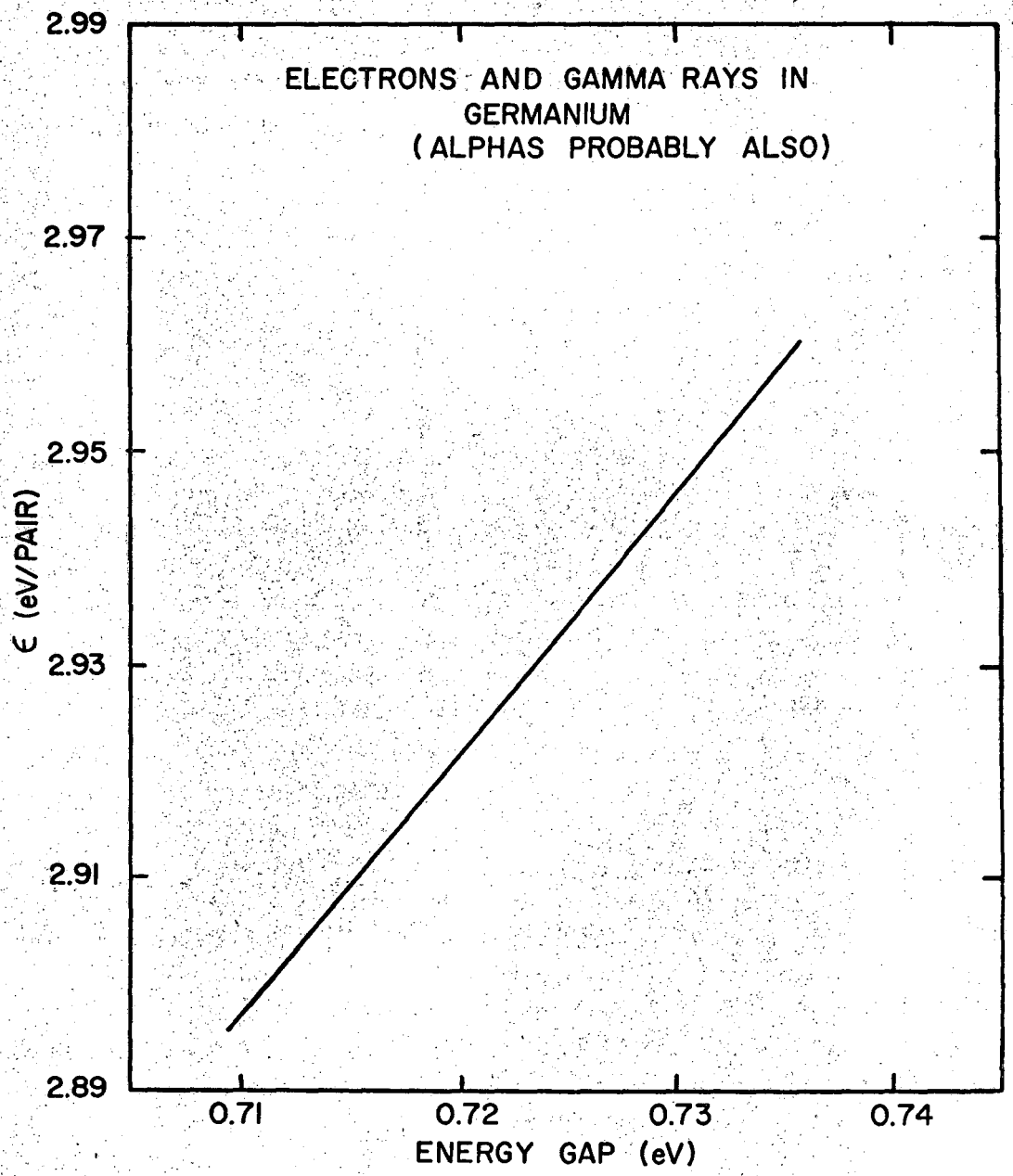

XBL 678-4744

Fig. 13

This report was prepared as an account of Government sponsored work. Neither the United States, nor the Commission, nor any person acting on behalf of the Commission:

A. Makes any warranty or representation, expressed or implied, with respect to the accuracy, completeness, or usefulness of the information contained in this report, or that the use of any information, apparatus, method, or process disclosed in this report may not infringe privately owned rights; or

B. Assumes any liabilities with respect to the use of, or for damages resulting from the use of any information, apparatus, method, or process disclosed in this report.

As used in the above, "person acting on behalf of the Commission" includes any employee or contractor of the Commission, or employee of such contractor, to the extent that such employee or contractor of the Commission, or employee of such contractor prepares, disseminates, or provides access to, any information pursuant to his employment or contract with the Commission, or his employment with such contractor.