UCRL-17776

C. 2

University of California

Ernest O. Lawrence Radiation Laboratory

NUCLEAR MAGNETIC MOMENT OF ^{85}Rb:
RESOLVING A DISCREPANCY

Vernon J. Ehlers, Thomas R. Fowler, and Howard A. Shugart

August 24, 1967

TWO-WEEK LOAN COPY

This is a Library Circulating Copy
which may be borrowed for two weeks.
For a personal retention copy, call
Tech. Info. Division, Ext. 5545

UCRL-17776
C. 2

DISCLAIMER

This document was prepared as an account of work sponsored by the United States Government. While this document is believed to contain correct information, neither the United States Government nor any agency thereof, nor the Regents of the University of California, nor any of their employees, makes any warranty, express or implied, or assumes any legal responsibility for the accuracy, completeness, or usefulness of any information, apparatus, product, or process disclosed, or represents that its use would not infringe privately owned rights. Reference herein to any specific commercial product, process, or service by its trade name, trademark, manufacturer, or otherwise, does not necessarily constitute or imply its endorsement, recommendation, or favoring by the United States Government or any agency thereof, or the Regents of the University of California. The views and opinions of authors expressed herein do not necessarily state or reflect those of the United States Government or any agency thereof or the Regents of the University of California.

Submitted to Phys. Rev. Letters

UCRL-17776
Preprint

UNIVERSITY OF CALIFORNIA

Lawrence Radiation Laboratory
Berkeley, California

AEC Contract No. W-7405-eng-48

NUCLEAR MAGNETIC MOMENT OF ^{85}Rb: RESOLVING A DISCREPANCY

Vernon J. Ehlers,† Thomas R. Fowler, and Howard A. Shugart

August 24, 1967

NUCLEAR MAGNETIC MOMENT OF ^{85}Rb: RESOLVING A DISCREPANCY*

Vernon J. Ehlers, Thomas R. Fowler, and Howard A. Shugart

Lawrence Radiation Laboratory and Department of Physics
University of California, Berkeley, California

August 24, 1967

Recent optical-pumping determinations of g_I/g_J for free ^{85}Rb atoms[1] are in considerable disagreement with an earlier atomic-beam measurement of the same ratio.[2] Because the discrepancey between the optical-pumping and atomic-beam results is nine times the larger experimental uncertainty, the question immediately arises whether this discrepancy is indeed real, or whether one of the measurements is in error. If the discrepancy were real, this would have had interesting implications for atomic theory.

In an attempt to resolve this question, we have remeasured the nuclear magnetic moment of ^{85}Rb, using the atomic-beam magnetic-resonance technique, and have obtained a result in agreement with the optical-pumping measurement. In an attempt to vary our technique from that used in Ref. 2, we have used the triple-loop method[3] in our measurements and have observed the $(F=3,m_F=-1) \leftrightarrow (3,-2)$ transition at its field-independent point at 2076.44 gauss. The frequency of this line is strongly dependent upon the value of g_I ($\frac{\partial\nu}{\partial g_I} = -2905$, where ν is in MHz and g_I is referred to the Bohr magneton), but depends less on the other parameters ($\frac{\partial\nu}{\partial a} = 0.58$, $\frac{\partial\nu}{\partial g_I} = -0.43$) in

the Breit-Rabi equation; thus this transition is well suited to a direct measurement of g_I.

A special triple hairpin, shown in Fig. 1, was constructed to observe this transition: The two end hairpins were constructed of standard rigid coaxial line and were used to induce the (3,-2) ↔ (3,-3) transition. In use the magnetic field was shimmed as necessary to make the transition frequency the same in both hairpins. The center hairpin, which was used to induce the (3,-1) ↔ (3,-2) transition, was of a simple box-type construction with a center conductor shorted at the bottom of the hairpin. The center hairpin had a length of 4.5 inches, resulting in a resonance line-width of 5 kHz for this transition. This type of hairpin has been used and tested quite extensively by our group, and has yielded reliable results for frequencies up to about 700 MHz. A typical ^{85}Rb (3,-1) ↔ (3,-2) resonance observed with this hairpin is shown in Fig. 2. The magnetic field was calibrated by measuring the frequency of the (3,-2) ↔ (3,-3) transition with the center hairpin.

The center frequency of the resonance was determined by measuring the frequencies of three pairs of points symmetrically placed about the center of the resonance. These six points were taken at random heights varying from one-third to near full height for each resonance. We were careful to record each pair of symmetrically placed points as quickly as possible, to avoid errors introduced by random fluctuations of resonance height. The average of the three pairs was taken to be

the center frequency of the resonance. In order to eliminate any discrepancies which might arise due to the direction of the magnetic field or the orientation of the hairpin, data were obtained for the four possible relative orientations and directions of the magnetic field and hairpin; sixty sets of data points were obtained for each orientation of the magnetic field and hairpin.

The data were analyzed by a least-squares fit to the Breit-Rabi equation. The results obtained for the four different orientations of magnetic field and hairpin are shown in Fig. 3. Also shown is a least-squares fit of all data obtained for all four orientations.

It is clear from the figure that our experimental result is independent of the orientation of the hairpin, but that some type of systematic error is introduced by changing the direction of the magnetic field. At the moment we have no conclusive explanation for this shift. It is not a simple Millman effect, but may perhaps arise from the additional field inhomogeneities introduced when the field is in the reverse direction, opposite to the direction of the inhomogeneous deflecting fields. These inhomogeneities caused the calibration resonance linewidth to be twice as much for the reverse direction ($\approx$ 600 kHz) as for the normal direction ($\approx$ 300 kHz).

These measurements were repeated 4 gauss from the field-independent point, at 2080 G ($\frac{\partial\nu}{\partial H}$ = 0.175 kHz/G). Ninety sets of data were taken at various orientations of the hairpin and magnetic field. As a test of possible systematic errors, no great care was taken in this measurement;

the magnetic field was not degaussed and calibration linewidths varied from 600 kHz to 1 MHz. The least-squares result at this field was $g_I = 2.936290(85) \times 10^{-4}$. This result is lower than the result obtained precisely at the field-independent point, but is in agreement with it within the experimental uncertainty. This measurement does point out the necessity of using extreme care in the measurement and the desirability of working precisely at the field-independent point.

Our final result obtained at the field-independent point is $g_I = 2.936376(45) \times 10^{-4}$. The uncertainty we have attached is twice the uncertainty yielded by our least-squares analysis as shown in Fig. 3; it has been enlarged to include possible systematic errors.

This experiment essentially is a measurement of the ratio of g_I to g_J. The value of g_J used in the above analysis is -2.0023319; dividing this into our result for g_I, we obtain $g_I/g_J = -1.466478(22) \times 10^{-4}$. This latest measurement is in excellent agreement with recent optical pumping determinations $-1.466496(10) \times 10^{-4}$ (Ref. 1a), $-1.46648(8) \times 10^{-4}$ (Ref. 1b); but disagrees with the previous atomic beam measurement $-1.466764(30) \times 10^{-4}$ (Ref. 2).

Recently Figger, Schmitt, and Penselin have measured[4] the g_I of ^{87}Rb by atomic beam techniques. Using their result, and the previously measured[5] NMR ratio of $g_I(^{85}\mathrm{Rb})/g_I(^{87}\mathrm{Rb})$, we calculate $g_I(^{85}\mathrm{Rb}) = 2.936436(40) \times 10^{-4}$, again in good agreement with the optical-pumping measurement and with our result.

The earlier atomic-beam measurement[2] was performed by observing the separation of the (3,-1) ↔ (2,-2) —— (3,-2) ↔ (2,-1) doublet components at their average field-independent point at 562.6 gauss. We attempted to repeat the doublet measurement using the center hairpin shown in Fig. 1, but discovered that at the required frequency of 2612 MHz our measurements were not dependable. Although the resonance appeared symmetric, our measurements of the resonance frequency yielded a value of g_I ten standard deviations different [$g_I = 2.9385(2) \times 10^{-4}$] from the more accurate value determined by using the triple-loop method. It was impossible to obtain a consistent least-squares fit of these doublet measurements to the Breit-Rabi equation, even when $\Delta\nu$ was allowed to be a variable in the analysis. It is quite clear that the rather simple design of this hairpin does not permit its use at such high frequencies, most likely because of a shift or distortion of the resonance. In an attempt to support this conclusion, the doublet measurements were repeated using a 3-in.-long version of the same hairpin; the result [$g_I = 2.9367(2) \times 10^{-4}$] from this shorter hairpin still gave an inconsistent least-squares fit, but was in much closer agreement with our triple-loop results.

It is difficult to understand why the result for g_I quoted in Ref. 2 differs from our results and those of Ref. 1. The data listed by Penselin et al. in Ref. 2 are very consistent, and a recalculation based on their data has given essentially the same result as quoted in their article. Furthermore, their results are internally self-consistent

in that the mean value of their doublet frequency agrees with their zero-field measurement of the hyperfine-structure separation. An explanation of the disparity remains an open question at this time.

We express our appreciation to Professor Richard Marrus for bringing this discrepancy to our attention and for urging us to remeasure this ratio.

REFERENCES

* Research supported by the United States Atomic Energy Commission.

† On summer leave from Calvin College, Grand Rapids, Michigan.

[1] Clark W. White, William M. Hughes, G. S. Hayne, and H. G. Robinson, Bull. Am. Phys. Soc. 12, 507 (1967); L. C. Balling, Bull. Am. Phys. Soc. 12, 508 (1967).

[2] S. Penselin, T. Moran, V. W. Cohen, and G. Winkler, Phys. Rev. 127, 524 (1962).

[3] G. K. Woodgate and P. G. H. Sandars, Nature 181, 1395 (1958); J. Phys. Radium 19, 819 (1958); W. A. Nierenberg and G. O. Brink, J. Phys. Radium 19, 816 (1958).

[4] H. Figger, D. Schmitt, and S. Penselin, Colloq. Intern. Centre Natl. Rech. Sci. (Paris) 164, 355 (1967).

[5] W. E. Blumberg, J. Eisinger, and M. P. Klein, Phys. Rev. 124, 206 (1961).

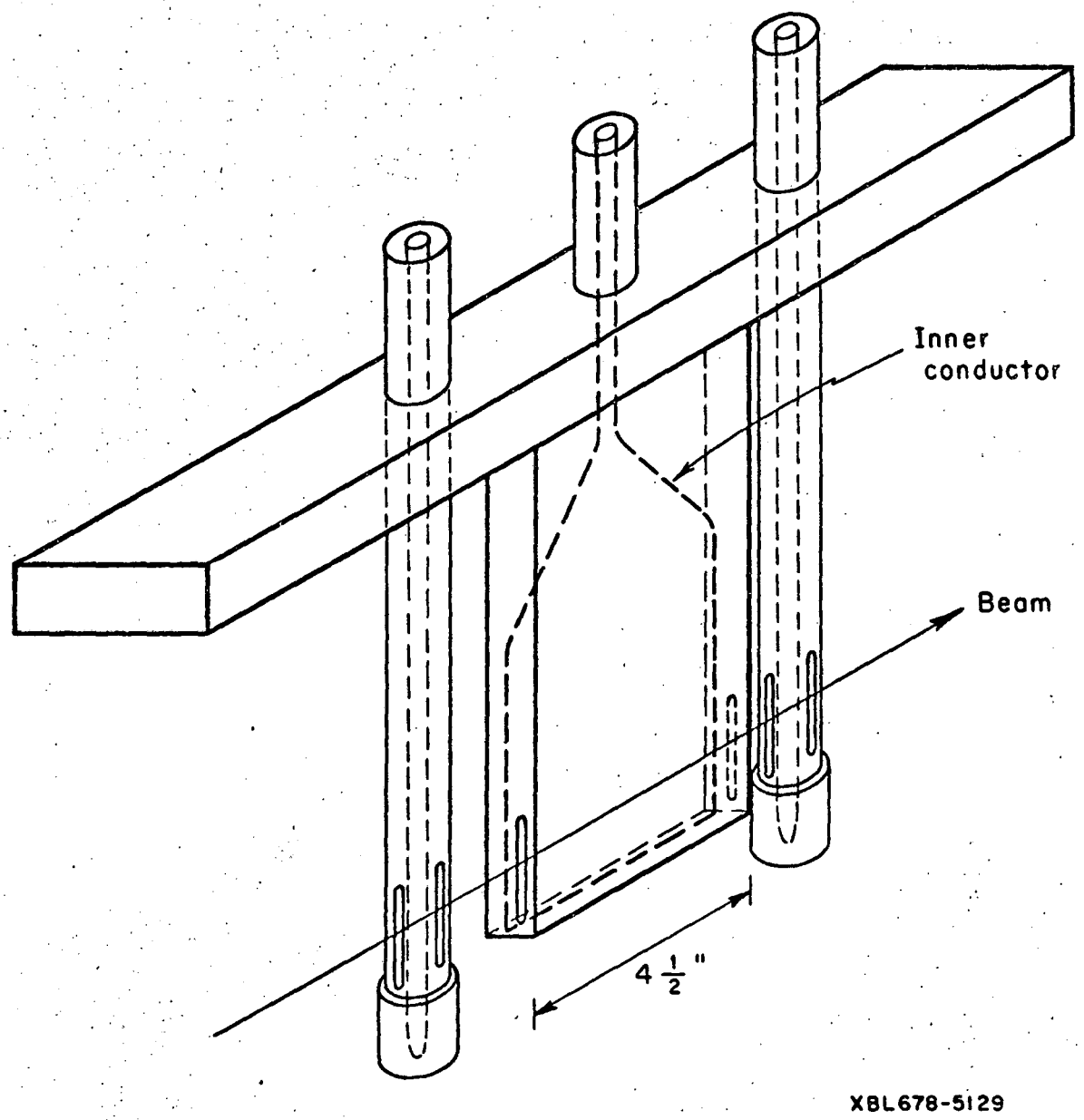

Fig. 1.

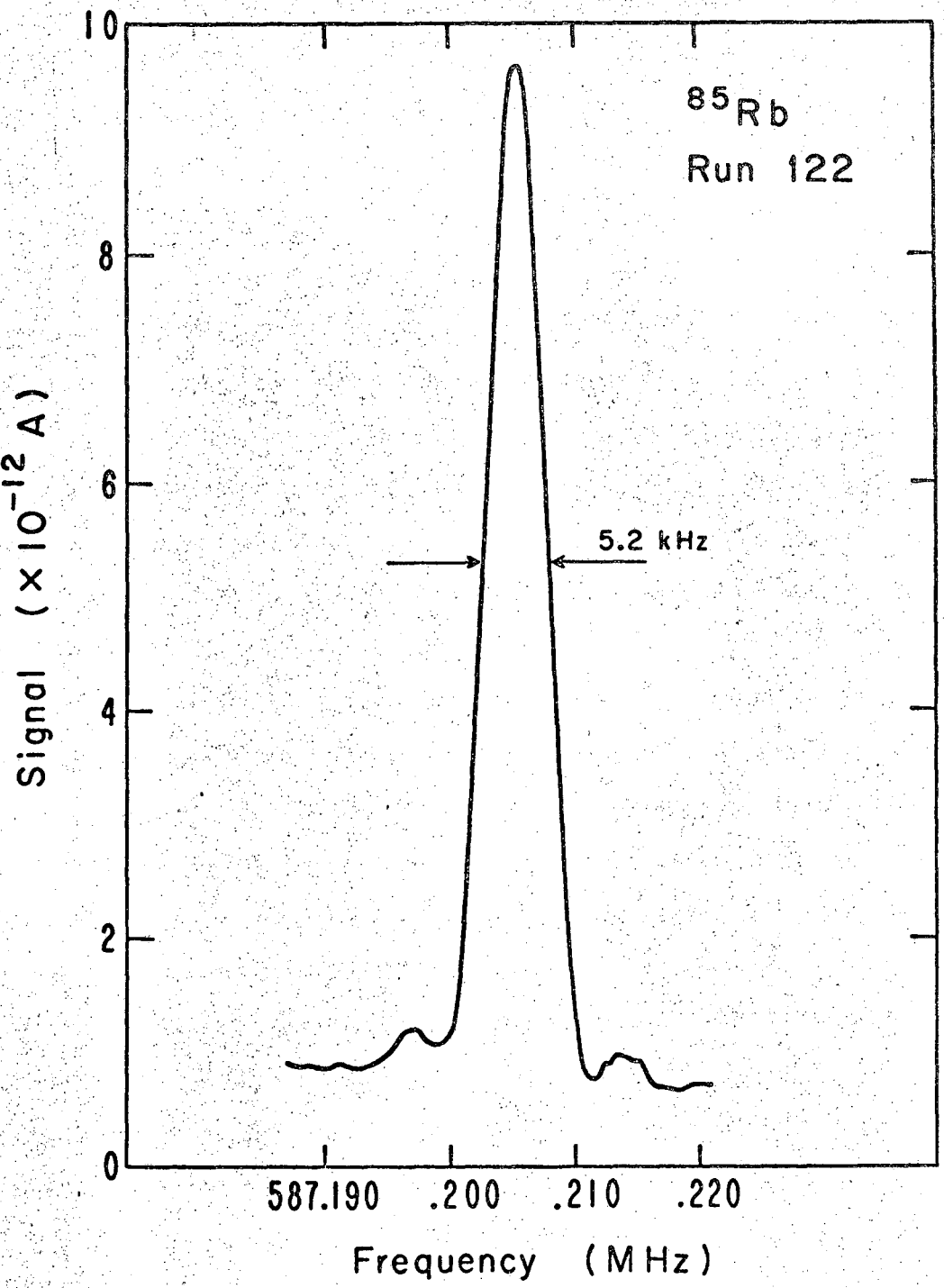

XBL678-5130

Fig. 2.

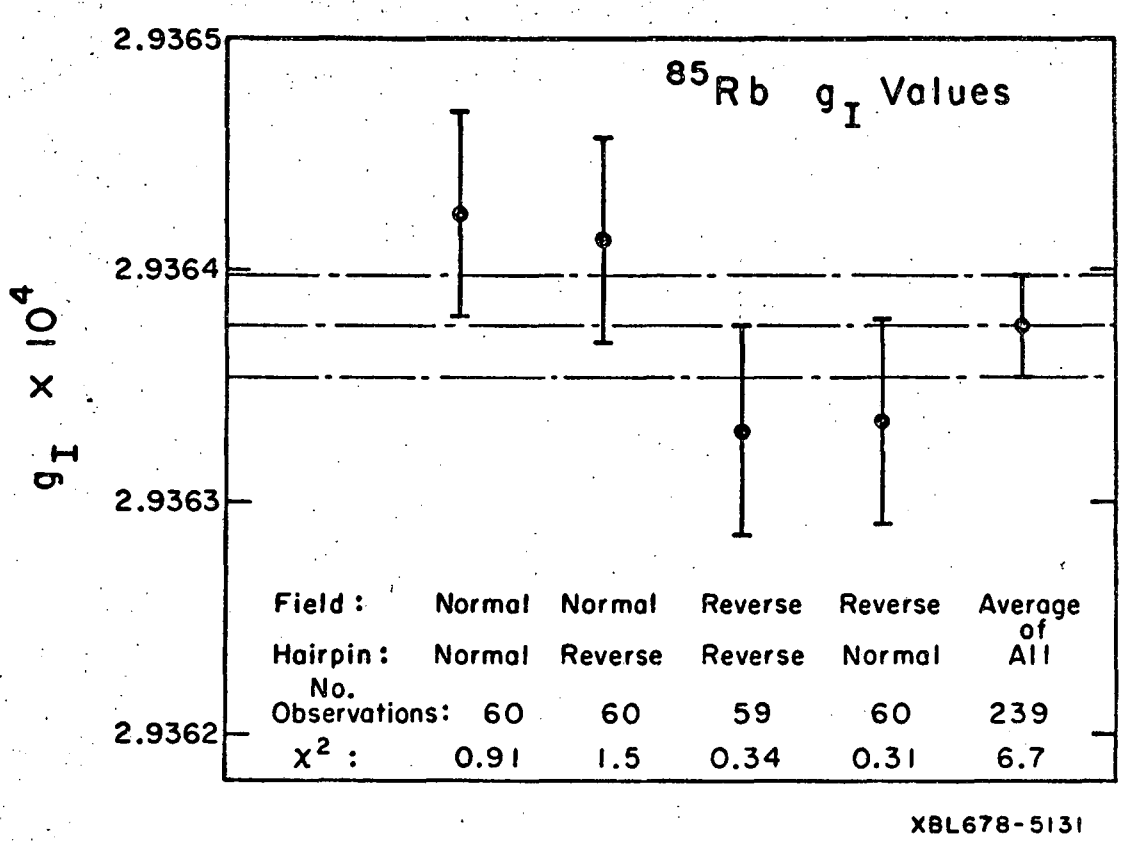
^{85}Rb g_I Values
$g_I \times 10^4$
2.9365
2.9364
2.9363
2.9362
Field: Normal Normal Reverse Reverse Average of All
Hairpin: Normal Reverse Reverse Normal
No. Observations: 60 60 59 60 239
χ^2: 0.91 1.5 0.34 0.31 6.7
XBL678-5131

Fig. 3.

This report was prepared as an account of Government sponsored work. Neither the United States, nor the Commission, nor any person acting on behalf of the Commission:

A. Makes any warranty or representation, expressed or implied, with respect to the accuracy, completeness, or usefulness of the information contained in this report, or that the use of any information, apparatus, method, or process disclosed in this report may not infringe privately owned rights; or

B. Assumes any liabilities with respect to the use of, or for damages resulting from the use of any information, apparatus, method, or process disclosed in this report.

As used in the above, "person acting on behalf of the Commission" includes any employee or contractor of the Commission, or employee of such contractor, to the extent that such employee or contractor of the Commission, or employee of such contractor prepares, disseminates, or provides access to, any information pursuant to his employment or contract with the Commission, or his employment with such contractor.