UCRL-17788

cy. 2

University of California
Ernest O. Lawrence Radiation Laboratory

BREMSSTRAHLUNG ACTIVATION OF ISOMERS

William Nom Hing Louie
(M.S. Thesis)

September 1967

RECEIVED
LAWRENCE
RADIATION LABORATORY
OCT 10 1967
LIBRARY AND
DOCUMENTS SECTION

TWO-WEEK LOAN COPY

This is a Library Circulating Copy which may be borrowed for two weeks. For a personal retention copy, call Tech. Info. Division, Ext. 5545

Berkeley, California

UCRL-17788 cy. 2

DISCLAIMER

This document was prepared as an account of work sponsored by the United States Government. While this document is believed to contain correct information, neither the United States Government nor any agency thereof, nor the Regents of the University of California, nor any of their employees, makes any warranty, express or implied, or assumes any legal responsibility for the accuracy, completeness, or usefulness of any information, apparatus, product, or process disclosed, or represents that its use would not infringe privately owned rights. Reference herein to any specific commercial product, process, or service by its trade name, trademark, manufacturer, or otherwise, does not necessarily constitute or imply its endorsement, recommendation, or favoring by the United States Government or any agency thereof, or the Regents of the University of California. The views and opinions of authors expressed herein do not necessarily state or reflect those of the United States Government or any agency thereof or the Regents of the University of California.

UCRL-17788

UNIVERSITY OF CALIFORNIA

Lawrence Radiation Laboratory
Berkeley, California

AEC Contract No. W-7405-eng-48

BREMSSTRAHLUNG ACTIVATION OF ISOMERS

William Nom Hing Louie
(M.S. Thesis)

September 1967

BREMSSTRAHLUNG ACTIVATION OF ISOMERS

William Nom Hing Louie

Lawrence Radiation Laboratory
University of California
Berkeley, California

September 1967

Abstract

A search was performed for isomers with half-lives in the millisecond range which could be excited with bremsstrahlung produced by 6.5 MeV electrons from a linear accelerator. Previous work in this energy range had been limited to isomers with half-lives longer than one second.

In-place counting was used with a plastic scintillator as the detector. Counting was done between beam pulses, with the detector circuit gated off during the beam burst. A gating circuit was designed for this purpose using SCR's as the main control elements.

One isomer in the millisecond range, 17 msec $^{75}As^{m}$, was found out of the sixty-four elements bombarded. Over-driving effects caused by the strong bremsstrahlung flash prevented detection in the very short millisecond range. In addition seven other isomers, with half-lives less than thirty seconds, were observed as follows:

$^{77}Se^{m}$	16.1 ± 0.7 sec
$^{79}Br^{m}$	4.9 ± 0.1 sec
$^{89}Y^{m}$	15 ± 1 sec
$^{167}Er^{m}$	2.3 ± 0.1 sec
$^{179}Hf^{m}$	18.8 ± 0.1 sec
$^{191}Ir^{m}$	5.3 ± 0.3 sec
$^{197}Au^{m}$	7.36 ± 0.06 sec

Introduction

The production of nuclear isomers from stable elements by (γ,γ') reaction from low energy bremsstrahlung (up to 8 MeV) has not been widely attempted, and only two experimental groups have done any extensive research in this area[1,2,3]. Lukens, et al., used bremsstrahlung from a gold converter target placed in a 3 MeV Van de Graaff generator electron beam while Kaminishi and Kojima utlized a 6 MeV linear electron accelerator and a lead converter target. In both cases the elements bombarded were transferred from the irradiating room to a separate counting area, thereby limiting the detection to isomers with half-lives greater than one second or so due to the time lost in transit of the targets. In this work the Lawrence Radiation Laboratory 8 MeV pulsed linear electron accelerator (LINAC) will be used along with in-place counting to extend research into the millisecond range of half-lives.

Although there are many known isomers or energy levels of stable elements with half-lives greater than one second, or less than a few microseconds, the known number with half-lives in the intermediate range is much smaller. It has been suggested that this could be due to nuclear structure[4] or inadequate detecting techniques. Some work was done by Vegors and Axel using a 22 MeV pulsed betatron in which 27 stable elements were irradiated (As, Mo, Pd, W, Tl, Bi, Zn, Y, Ta, Pb, O, Na, Mg, Al, I, Cl, K, Ti, Cr, Mn, Fe, Ni, Zr, Sb, Ba, Ce, and Th)[5]. Seven new isomers were found with half-lives in the aforementioned intermediate range of which only two could be attributed to a (γ,γ') reaction; 12 msec As and 33 μsec Pd. They concluded

that their success indicated that the inadequacies in detecting techniques were the limiting factors.

Experiment

The use of a low energy pulsed accelerator makes it possible to detect isomeric decay with half-lives in the milli-second range by gating the detector off during the beam burst and counting between beam pulses. The repetition rate of the linear accelerator used in this experiment can be adjusted for 7.5, 15, 30, 60, and 120 cps operation and also in single steps from 1 to 10 cps. Maximum energy of the machine is 8 MeV at 100 mA beam current per pulse, each pulse being 7.5 μsec in duration. For this work, the energy was limited to 6.5 MeV in order that thresholds of gamma-induced reactions other than (γ,γ') were not exceeded. This is one of the advantages of this method of activation in that unwanted secondary reactions can be eliminated in spite of the small photoactivation cross sections involved.

Experimental Procedure

The geometry used in this experiment is shown in Fig. 1 in cross section. A specially constructed table, 16" x 18" x 45", was used to support the detector assembly and lead shielding. A 3-1/2" diameter hole in the top shelf permitted feedthrough of the detector which was unshielded on top to view the target. For the most part, shielding was built up of 2" x 3" x 6" and 2" x 4" x 8" lead bricks with smaller odd size pieces for fill-in. Although the photon flux was predominantly

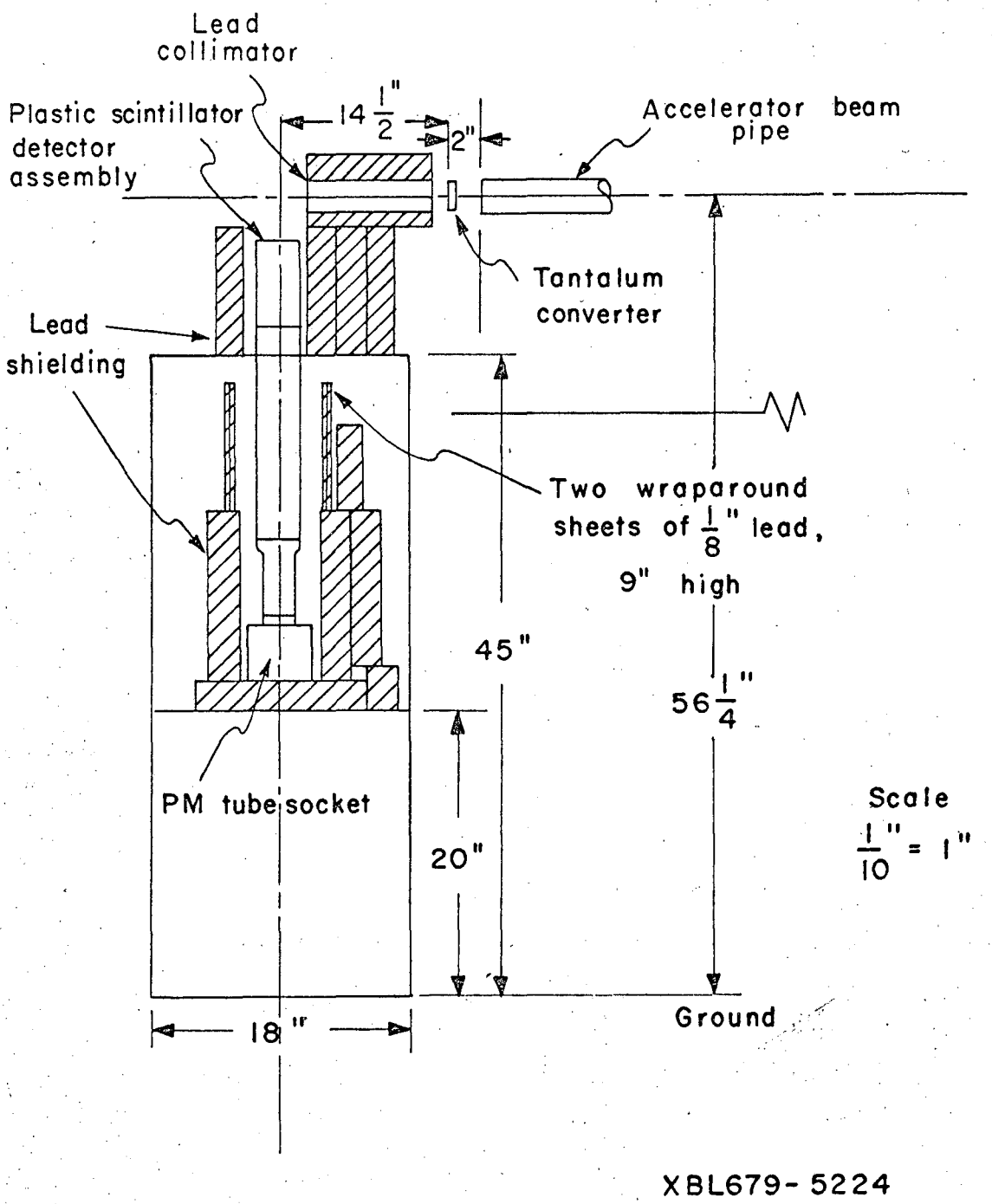

Fig. 1. Irradiation arrangement.

in the forward direction, the shielding was arranged so that the detector assembly would receive as little irradiation as possible from any direction.

The bremsstrahlung converter was an 80 mil thick by 2 inch effective diameter tantalum disk, mounted in a holder and cooled by circulating water. The holder assembly was clamped in a ringstand and positioned two inches from the window of the accelerator beam pipe. Exact centering of the converter in the beam was accomplished by use of a transit.

The detector assembly consisted of a 3" diameter by 6" long plastic scintillator cemented to a 3" diameter by 15" long lucite light pipe. The latter was in turn connected to a 3" Dumont 6393 10-stage photomultiplier tube using optical coupling grease. The whole assembly was covered with aluminum foil which was grounded to the cathode pin of the photomultiplier tube and then wrapped with opaque black tape.

Originally, a Harshaw 3" x 3" NaI integrated unit detector was tried, but it was found that over-driving effects due to the bremsstrahlung rendered the system completely insensitive for many seconds after the electron beam was turned off, even with no high voltage applied to the tube during the beam-on time. This effect made it unsuitable even for detecting activities with half-lives on the order of a few seconds and completely useless for between-beam-pulse work. To determine whether this was a crystal effect or a tube effect, a 2" x 2" NaI crystal was mounted on the end of an 18" long light pipe and photomultiplier assembly. First the crystal and then the phototube was placed near the beam of the LRL 7.5 MeV microtron with the

opposite end shielded in a lead housing. There was little noticeable effect with the phototube near the beam, but with the crystal in the beam, the same symptoms were experienced as at the LINAC. Conversely, tests with a 2" x 4" x 6" piece of plastic scintillator in the same testing configuration showed no such adverse effect, and it was decided to use this in spite of its lower sensitivity and poor pulse height spectra.

A black diagram of the electronics is shown in Fig. 2. The detector and the preamplifier were located in the target room, and the rest of the equipment was positioned outside the control area to reduce RF interference from the accelerator electronics. The RF level was initially found to be quite high and was finally minimized by powering all equipment from the same AC power feed and connecting a common ground between all equipment and accelerator components.

In the between-beam-pulses mode, the accelerator klystron timing pulse triggers the pulse generator and the series of three delay gate units. The output pulse of the pulse generator is delayed sufficiently for the beam burst to be terminated (approximately 25 μsec after the klystron timing pulse) before turning on the detector and triggering the time base oscillator. The latter in turn starts the RIDL 400 channel pulse height analyzer. The analyzer sweeps through its cycle determined by the time base oscillator and at the end sends a STOP signal back to the oscillator. The detector OFF pulse from the delay gates then turns off the detector after the end of the cycle and prior to the start of the next klystron timing pulse.

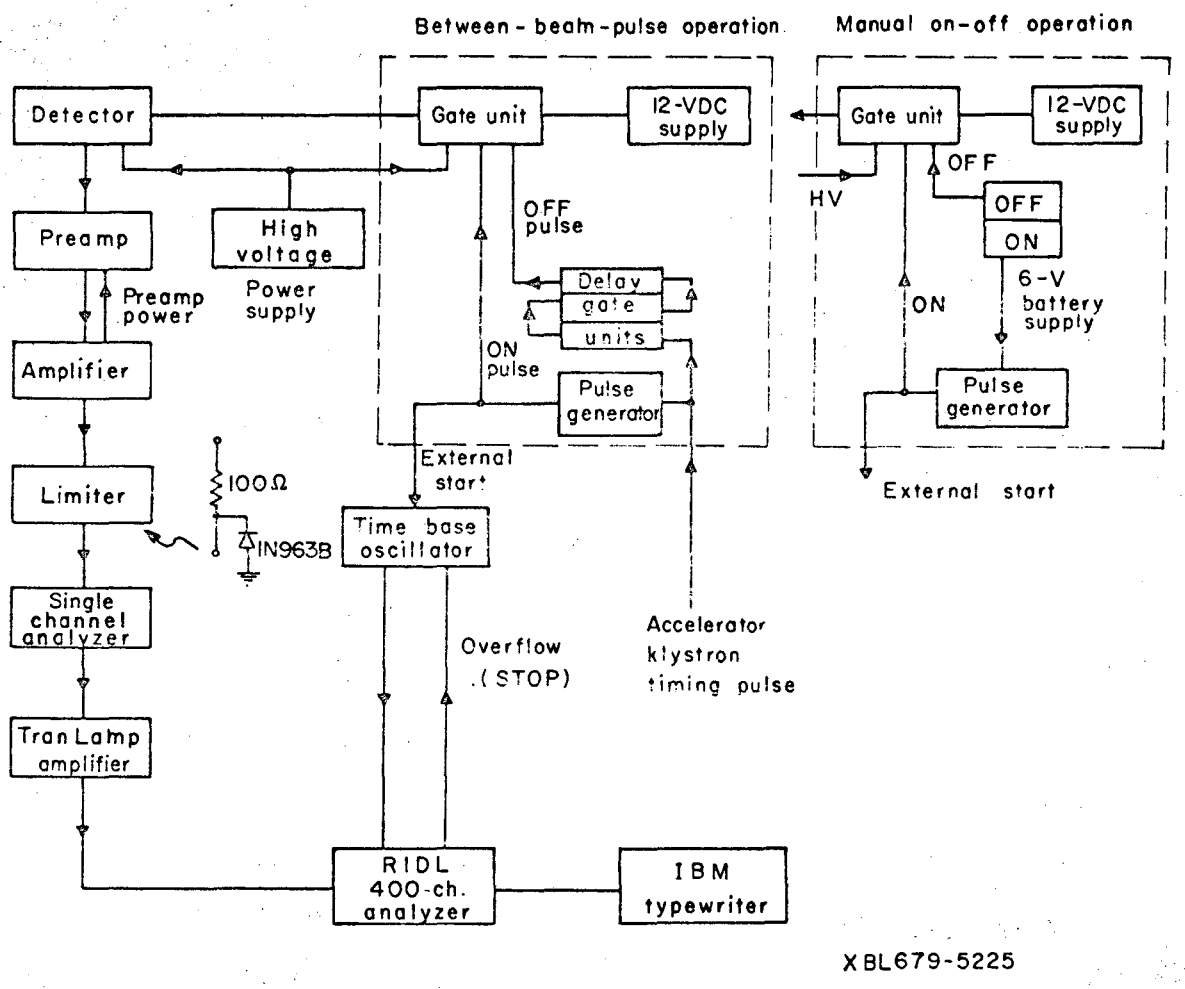

Fig. 2. Block diagram of electronics.

Table 1

List of Electronics Equipment

1. LRL Model VI Linear Amplifier 3X9494 and Preamplifier
2. LRL Single Channel Analyzer 15X6512
3. LRL TranLamp Amplifier 15X4845
4. Radiation Instrument Development Laboratory, Inc.(RIDL) 400 channel Pulse Height Analyzer, Model 34-12 and Model 52-24 Printout Control Unit
5. IBM Printout Typewriter
6. LRL Switched Programmed Time Base Oscillator 15X8410
7. LRL Dual Delay Gate 11X2461P2
8. Carad High Voltage Precision Power Supply #1524A
9. LRL Mercury Pulse Generator 1X6693
10. E-H Research Laboratories Model 131 Pulse Generator
11. Tektronix Oscilloscope Model 535

In the other operational mode for longer half-lives the detector is turned on after a sample has been irradiated for the prescribed period. The klystron timing pulse and the delay gates are not used. Instead, a control box with a 6-volt battery and two SPST push button switches are used as shown to remove the potential drop across the detector. Only two cables need reconnecting for a changeover of operating modes.

Several gating methods were tried without success before the one finally used was designed. One method applied reverse bias to the focusing electrode, between the above-ground cathode and the first dynode, by grounding it through a transistor acting as a gate switch[6]. Another used a flip-flop transistor circuit to bring two adjacent dynodes to the same potential. A third used SCR's (silicon controlled rectifiers) in parallel with two to four dynodes and again bringing the outer dynodes to the same potential. In all cases the intensity of the bremsstrahlung flash still caused ejection of electrons from dynodes down the line from the gated dynodes as a result of not having the tube completely gated off during the beam burst.

The gating circuit designed is pictured schematically in Fig. 3. The photomultiplier tube circuitry is of conventional design with the exception that it is nowhere directly grounded but is connected through an SCR circuit as shown. Except for the two IN3775 high voltage diodes, this is a standard SCR class C commutation circuit such as described in the General Electric SCR manual[7]. In operation if the "ON" SCR is conducting, for example, the capacitor charges so that the left lead is positive and the right negative. When the "OFF" SCR is triggered, the

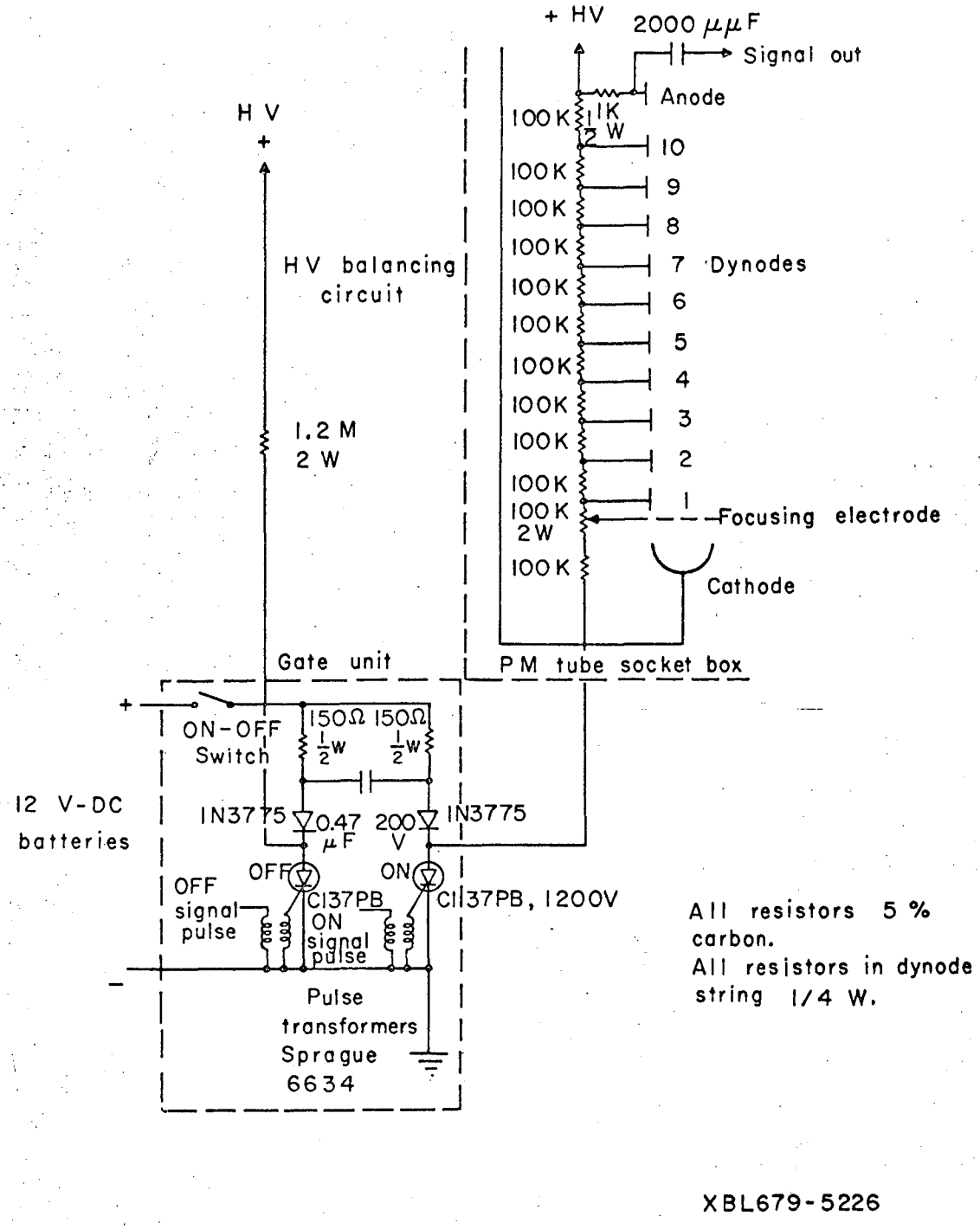

Fig. 3. Photomultiplier-tube gating circuitry.

capacitor is switched across the "ON" SCR, and its discharge current opposes the current flow in the "ON" SCR, thereby turning it off. The capacitor then charges up in the reverse polarity from before. When the "ON" SCR is not conducting, the photomultiplier dynode string is essentially an open circuit; therefore, no current will flow even though the high voltage is still impressed, thus the photomultiplier is completely turned off during a beam burst. The presence of the high voltage at all times eliminates serious transients such as would occur if the high voltage was alternately turned on and off. The high voltage balancing circuit keeps the HV power supply from fluctuating due to the switching by having an equivalent dummy load on the output during the time the detector is turned off.

The two IN3775 diodes keep the high voltage circuit isolated from the low voltage 12 VDC supply. This low voltage supply was necessary because the photomultiplier dynode string current was below the holding current rating of the SCR's, hence an additional source of current was needed to keep an SCR turned on. At the present state of the art, there are no SCR's available commercially in this voltage and current rating which has a low enough holding current requirement to eliminate the auxiliary low voltage power supply.

The turn-on time of this circuit was measured as approximately 2 μsec at 1000 V applied with signal pulses available 10 μsec after the trigger pulse. Turn-off time was 150 μsec, but this was unimportant since there was no restriction on the minimum time between detector turn-off and accelerator beam turn-on time in this experiment.

The delay gates producing the detector "OFF" pulses are logic units furnishing SET signals at -1 VDC and RESET signals at +4 VDC. Three units were required to obtain the proper SCR turn-off pulse shape and the correct range of delay times. This is illustrated in Fig. 4. With this arrangement, delay times could be adjusted from 2 μsec to 2 sec using the delay controls of delay gates 1 and 2 together. The width of the "OFF" pulse is set by the delay control of gate 3.

The single channel analyzer was employed in the circuit as a discriminator. The lower threshold was found to be 0.28 V using a mercury pulse generator. Output of the analyzer is 8 V for any input above the 0.28 V threshold. The input range is limited to about 12 V or so by design, so a limiter circuit was placed between the main amplifier and the analyzer to eliminate transients which might cause damage. Output of this circuit was 12 V maximum.

The detector output was negative, and after passing through the main amplifier, the signal became positive. However, input to the RIDL 400 channel analyzer is required to be negative, so the TranLamp amplifier was used as a one-to-one inverter only.

Experimental Results and Discussion

Sixty-four elements were irradiated in this experiment and are listed in Table 2 with their weights and thicknesses. By comparison, Vegors and Axel used 27 in their work. Lukens, et al., bombarded a total of 72; namely, all those used here except Nb, Be, Th, and U, and in addition Sc, Ru, Tb, Tm, Lu, Rb, Sr, Ce, Nd, Eu, Os, and Pr. No mention is made by Kaminishi and Kojima as to which elements they used, aside from those with

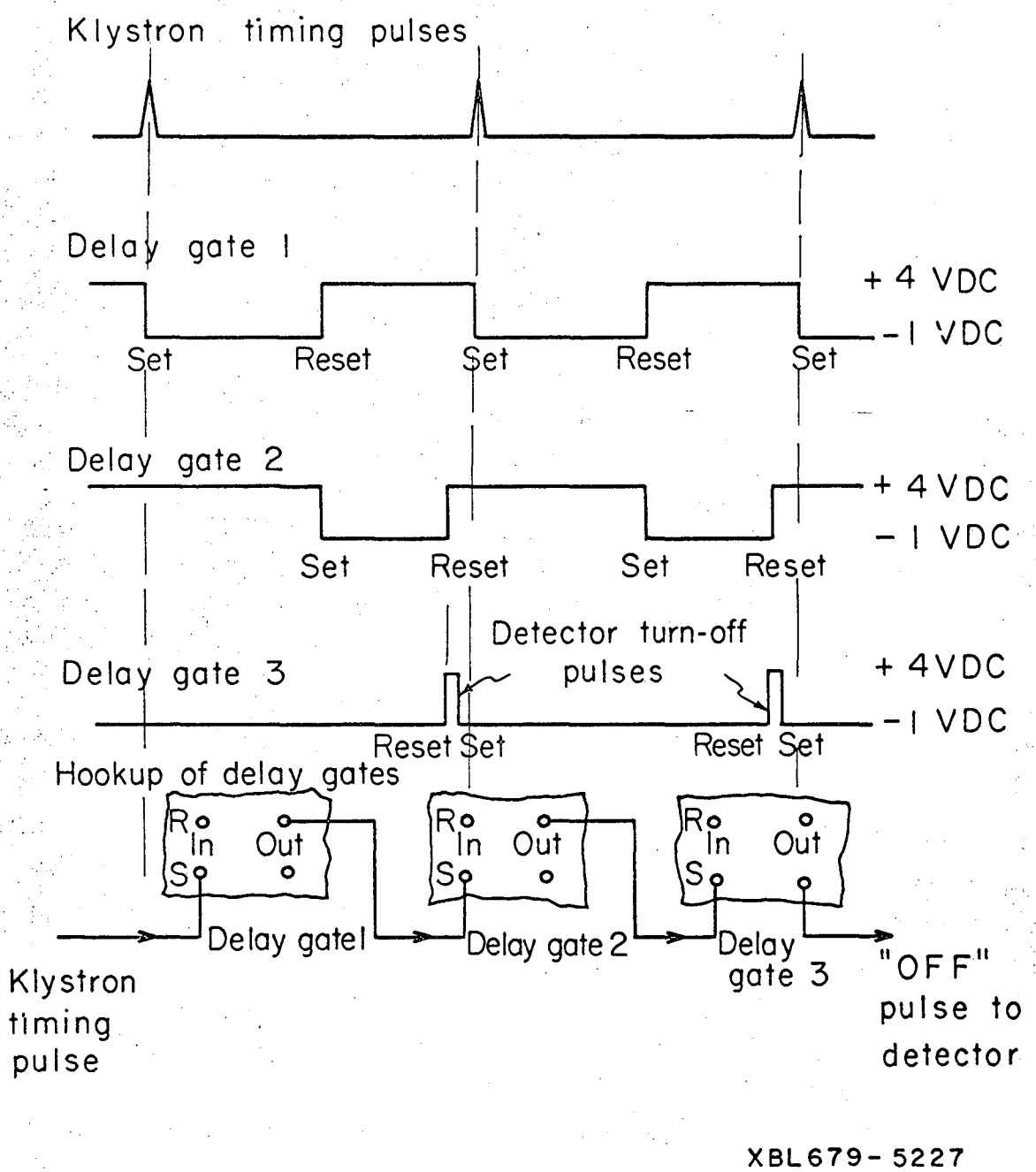

XBL679-5227

Fig. 4. Delay-gate circuitry for detector "OFF" pulses.

Table 2

List of Target Elements

Element	Thickness, g/cm^2	Weight, grams	Element	Thickness, g/cm^2	Weight, grams
Ba		69	N (powder compound)	1.75	170*
Hf	1.83	20	Cs (CsCl powder)	1.03	114*
Gd	0.42	28	O (H_2O)	1.05	87*
Yb	1.06	33	F (LiF powder)	1.01	113*
Sb	2.60	239	Na (powder)	1.74	205*
Zr	1.07	163	P (powder)	0.984	107*
Zn	2.27	233	S (powder)	1.37	153*
Hg	2.36	248*	Co (powder)	0.916	108*
Mg	1.15	118	Nb	1.20	54
Sm	0.92	31	Be	1.21	121
Ho	1.43	41	Re	1.23	34
Dy	1.54	31	Cl (LiCl powder)	2	41
Ti	1.12	171	Ta	2.21	357
Ca (granules)		270*	Th	1.6	137
Si (powder)	0.979	112*	U	2.81	318
Mn (powder)	1.495	161*	Y	1.465	35
V (V_2O_5 powder)	1.79	190*	Er	1.40	33
Cr (powder)	1.36	146*	Mo	2.03	270
Ni	1.04	211	Cd	1.36	145
Ga	1.463	158*	Bi	1.25	109
Se (powder)		118*	Ge	1.33	70
I (powder)		138*	Tl	0.95	118

Table 2 cont.

List of Target Elements

Element	Thickness, g/cm^2	Weight, grams	Element	Thickness, g/cm^2	Weight, grams
La	0.94	39	Au	3.07	310
Sn	2.95	170	Ag	3.33	347
In	0.5	33	Pt	1.09	112
B (powder)	0.86	104*	Rh	0.949	103
C	1.12	116	Pd	0.915	97
Te		143*	As		113
K, Br } KBr		454	Ir	1.14	121
Cu	1.44	113	Fe	5.0	390
Al	1.71	135	W		210
Li (LiF powder)	1.01	113*			

*including plastic container; estimated weight 20 - 30 grams.

isomers quoted in their report.

Principal interest was in isomers with half-lives less than thirty seconds. In searching for isomers with half-lives greater than one second, each of the elements was irradiated for one minute at an accelerator power level of 60 mA, at 6.5 MeV, and a frequency of 60 pulses per second. An automatic timer was used to shut off the machine. The detector was manually turned on immediately after accelerator shutdown with a time lapse of about one-tenth of a second, as determined by stopwatch measurements. A 100 channel sweep on the analyzer and a time base oscillator setting of two seconds per channel were used as base points in the preliminary search. These were changed later as appropriate when an activity was found.

A power level of 60 mA at 6.5 MeV was also used for shorter half-lives and counting was performed between beam pulses. The irradiation times and data accumulation times are listed in Table 3. Note that only a few elements were irradiated at 15 and 30 pulses per second and none at higher pulse rates. This was due to the fact that the duration of the over-driving effects caused by the bremsstrahlung flash increased as the integrated exposure time of the photomultiplier tube accumulated - a fatigue effect. After several hours of exposure, the interference was so great that no between-beam-pulse data could be taken. Finally, even the data for the long half-live runs were affected, at which time the tube could no longer be used for in-place counting. The interference thus limited the range of research to half-lives on the order of a few milliseconds or longer under the best conditions.

Table 3

Elements Irradiated For Counting Between Beam Pulses

Accelerator Pulse Rate, pulses/second	Data Accumulation Time	Elements Irradiated
30	1 min	Ge Er Hf Pb
30	30 sec	Dy Ho Sm Y Mg Si Mn Cr V Ga Ti As Ca Mo Cd Bi Tl Ni
15	30 sec	Cu S Na Zn Ti Ca Ni W P Co Cl Cs N Br Nb Sn
6	1 min	Al C S P Ti Br K W Ba Na Li F B O Co Hg Nb Cu Zn N Cs Cl Sb In Zr Ta Au Pd Pt Rh Ag Ir Yb Re Gd Te Pb Fe
2	1 min	All 64 elements listed on Table 2 except Th, U, Au, Pd, Pt, Rh, Ag.

Pulse height analyzer set at 100 channels for all runs.

Time base oscillator set as follows:

a. 30 pulses/second - 0.3 msec/channel

b. 15 " " - 0.6 msec/channel

c. 6 " " - 1.6 msec/channel

d. 2 " " - 4.9 msec/channel

A total of five Dumont 6393 photomultiplier tubes were used in the experiment, two being brand-new. There seemed to be no correlation between the newness of a tube and the amount of after-pulsing present. The quietest tube, used for the 30 and some of the 15 pulses-per-second runs, had been used previously. One of the new tubes could not be used for anything shorter than 6 pulses per second.

Decay curves of the activities found are presented in Figs. 5 through 13. Backgrounds were averaged from the last part of the gross decay curve where the induced activity had decayed away, usually the last twenty to thirty channels, but not less than twenty.

The energy of the accelerator was checked using glass microscope slides in the electron beam to record the range as manifested by the discoloration depth after irradiation. Fermi's derivation for range-energy relationships,

$$R = \rho t = 0.542\ E - 0.133$$

was used to determine the accelerator energy, or

$$E(\text{MeV}) = \frac{\rho t + 0.133}{0.542}$$

where

$\rho = 2.36\ \text{g/cm}^3$ for glass slides

t = depth of discoloration in stack of glass slides, cm.

A summary of the findings is tabulated in Table 4 along with data of other researchers for comparison. Table 5 lists the experimental conditions for the data taken. No pulse height data were taken for photon energy measurements because of the poor pulse height spectra of the plastic scintillator. Reactions

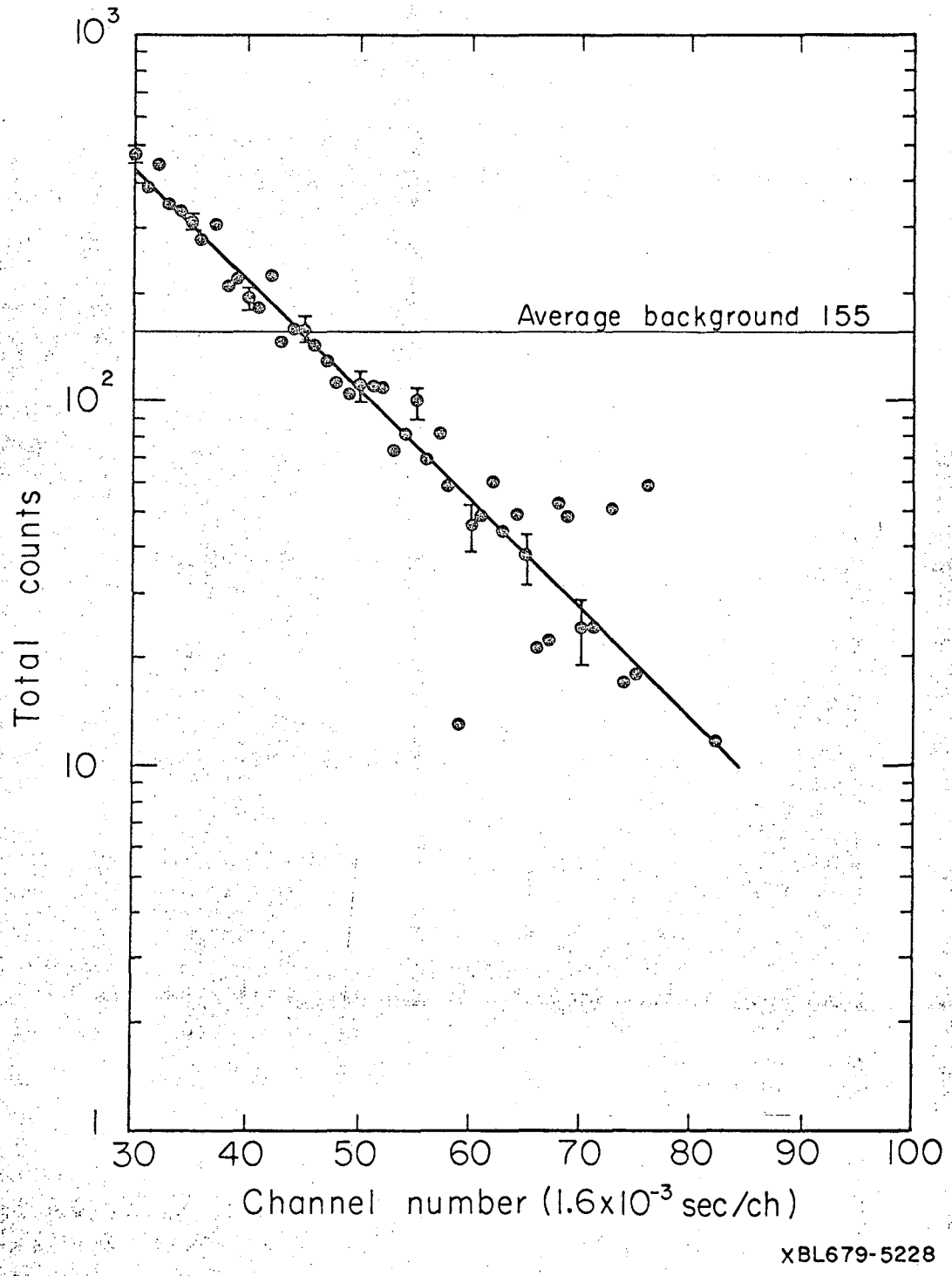

Fig. 5. As decay curve: counts minus background.

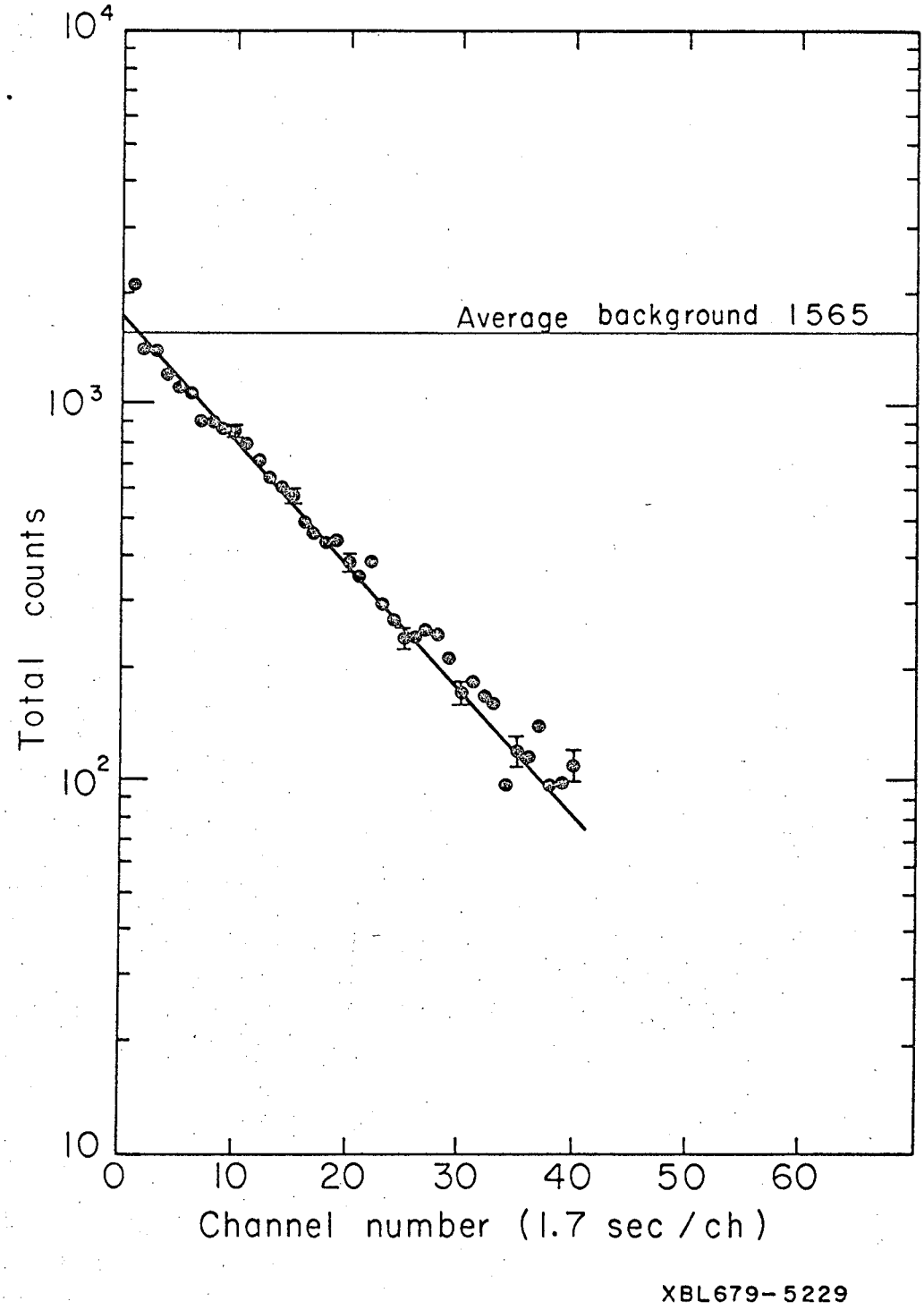

Fig. 6. Se decay curve: counts minus background.

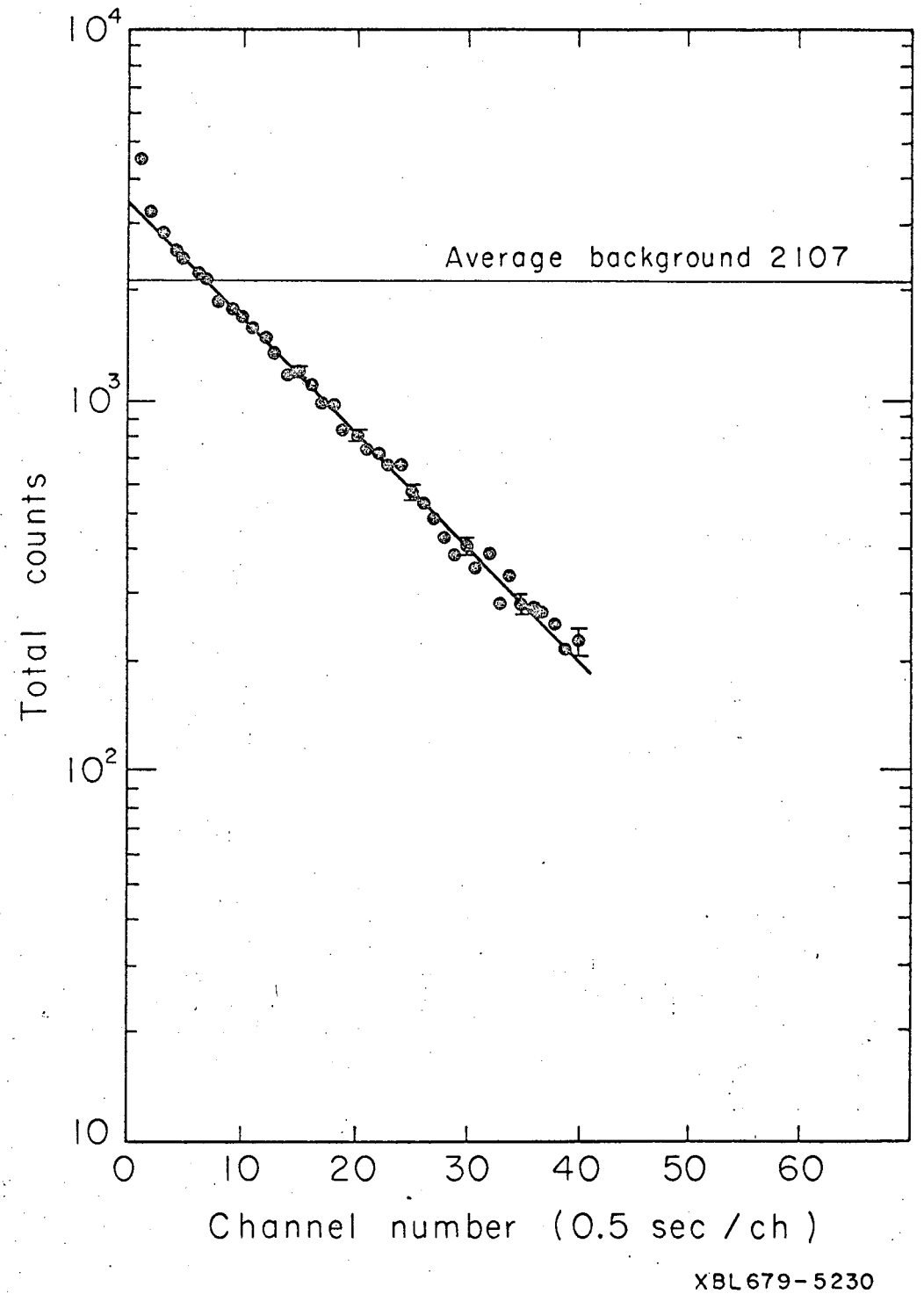

Fig. 7. Br decay curve: counts minus background.

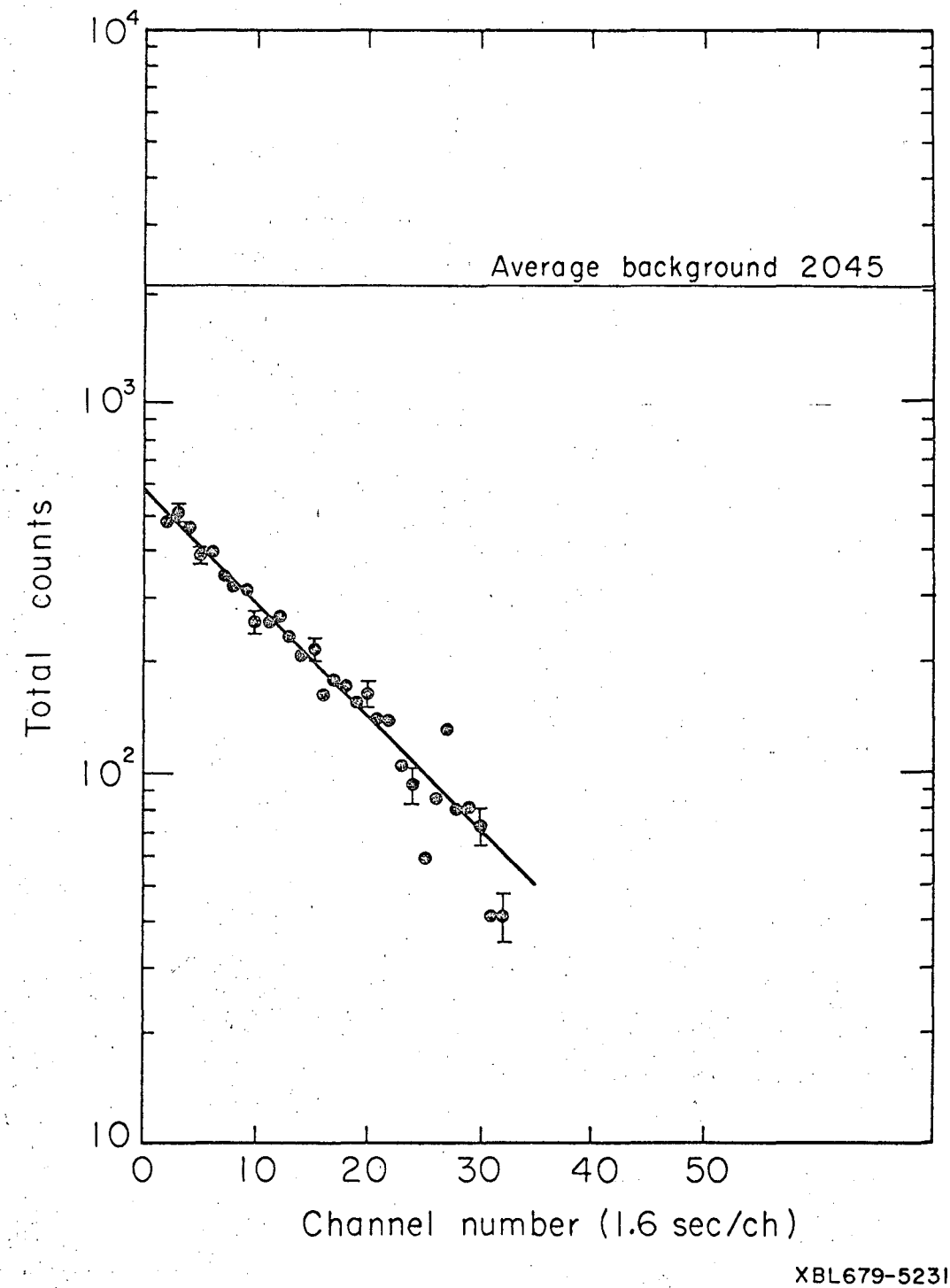

Fig. 8. Y decay curve: counts minus background.

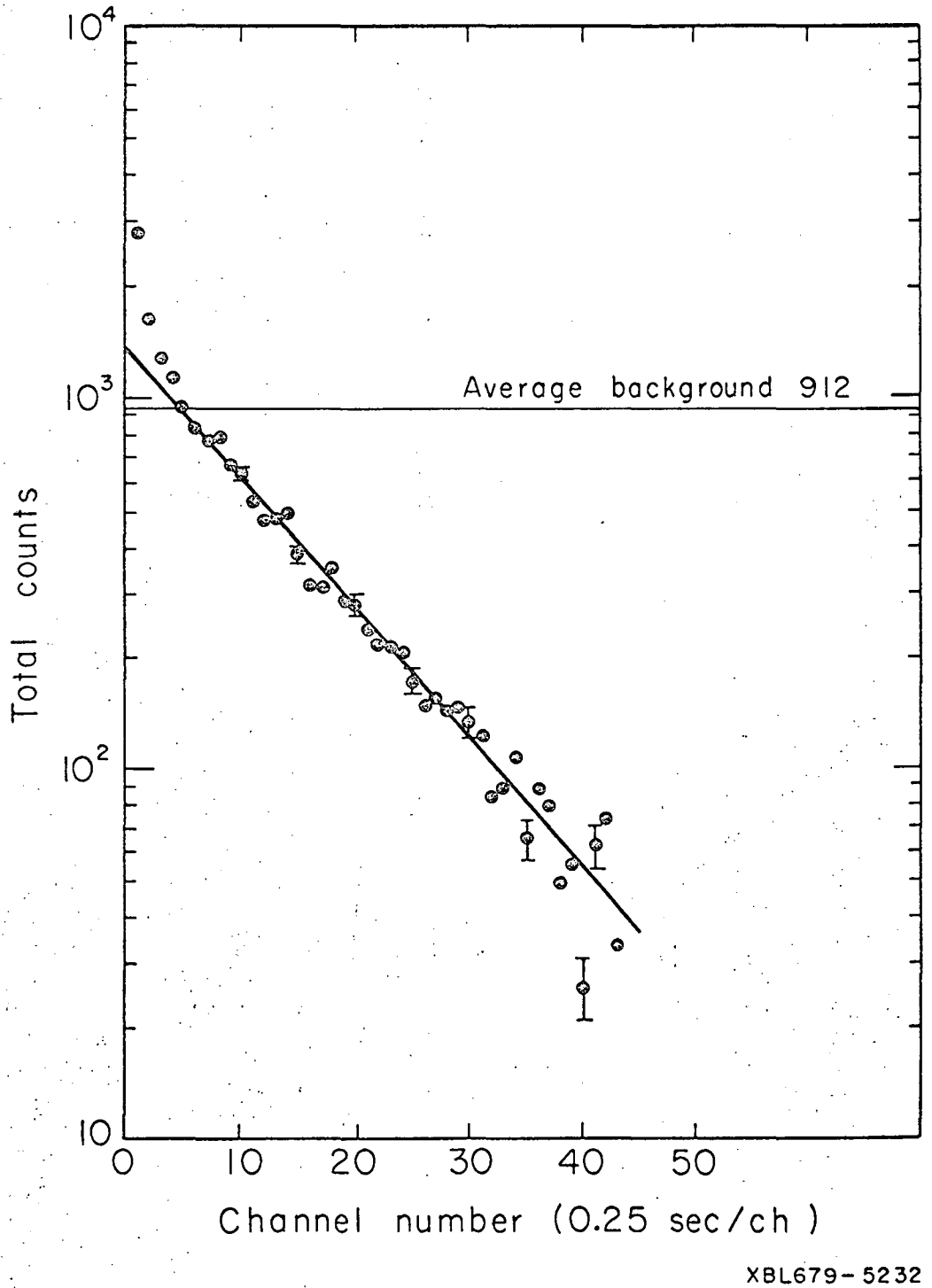

Fig. 9. Er decay curve: counts minus background.

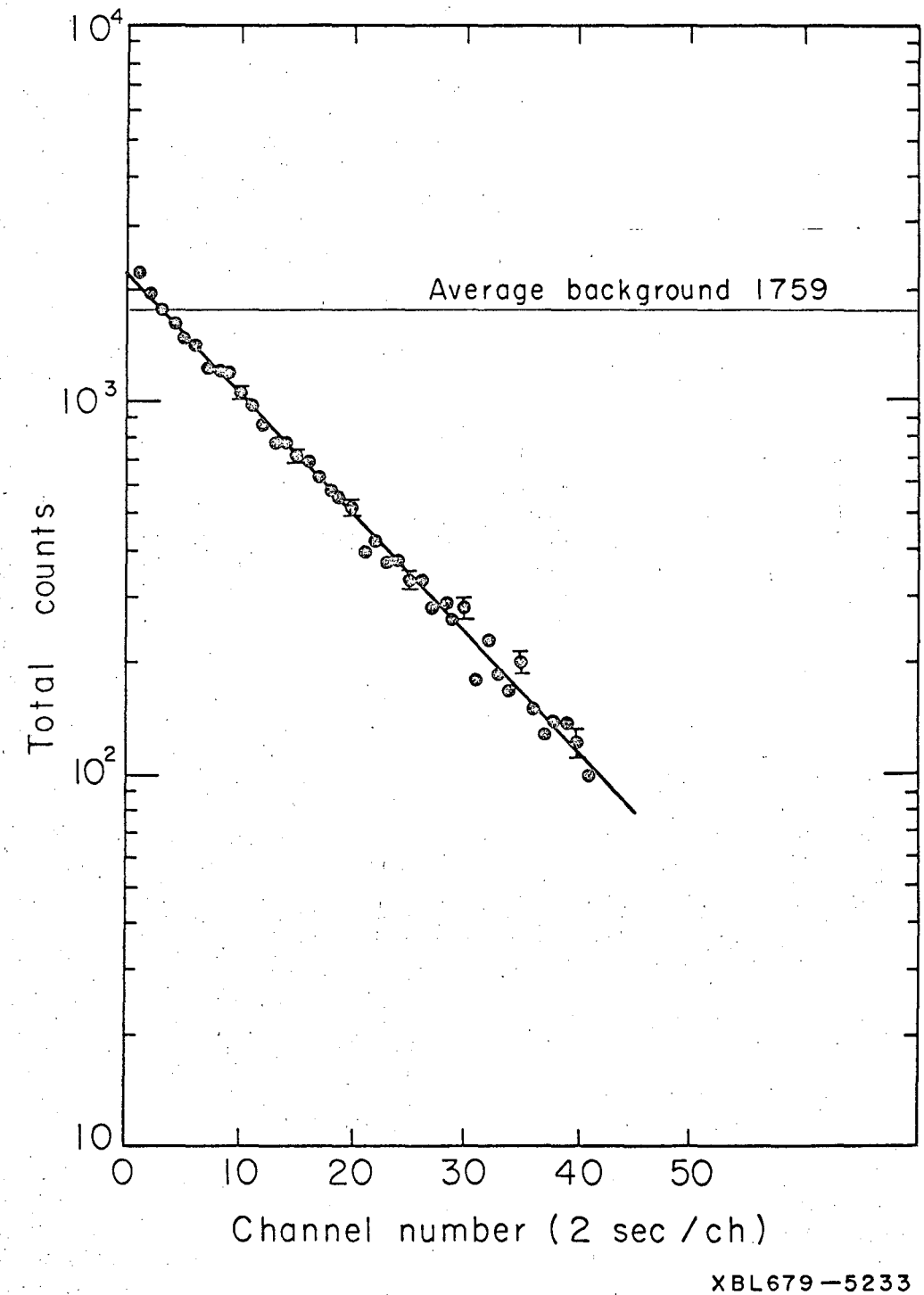

Fig. 10. Hf decay curve: counts minus background.

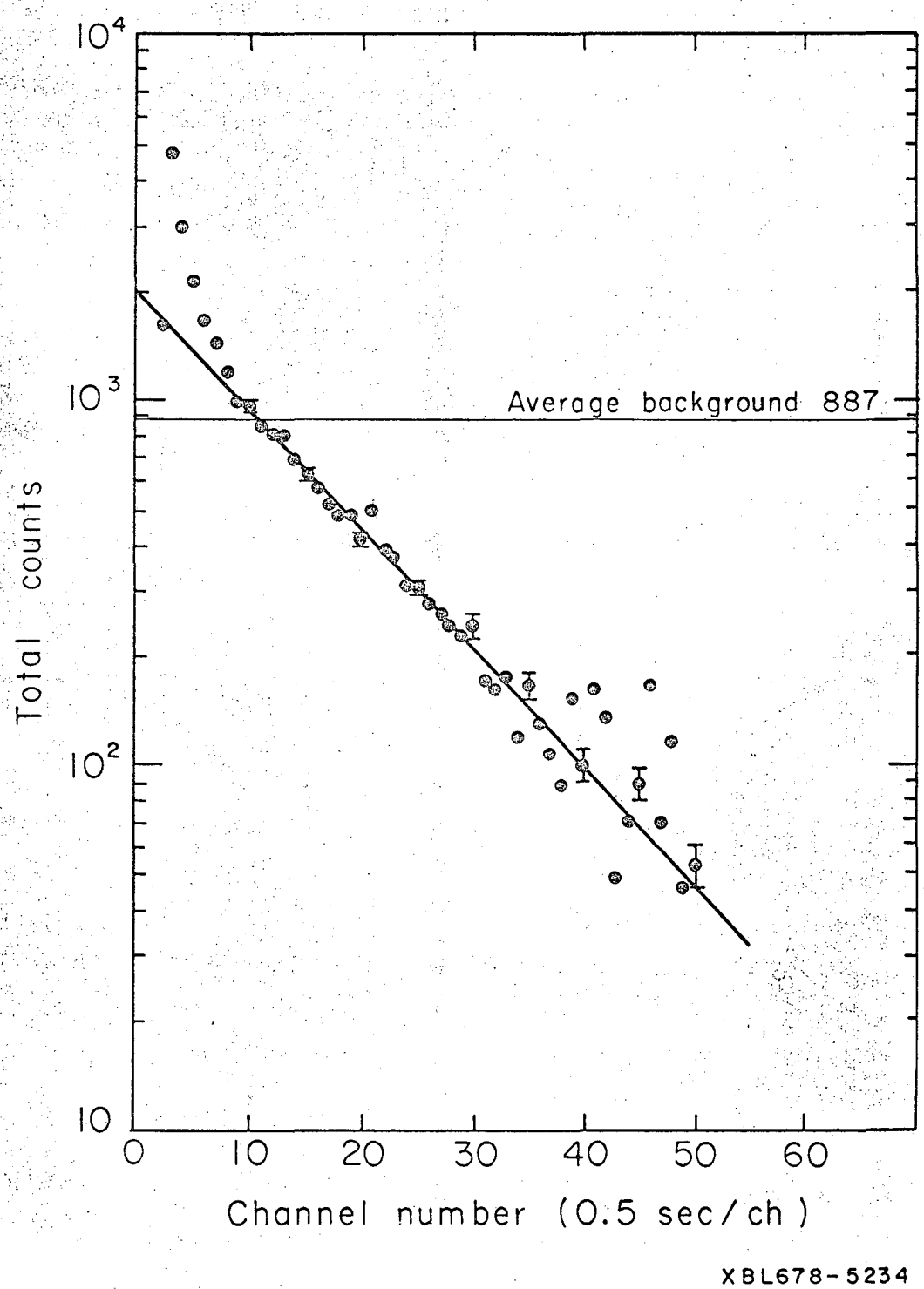

Fig. 11. Ir decay curve: counts minus background.

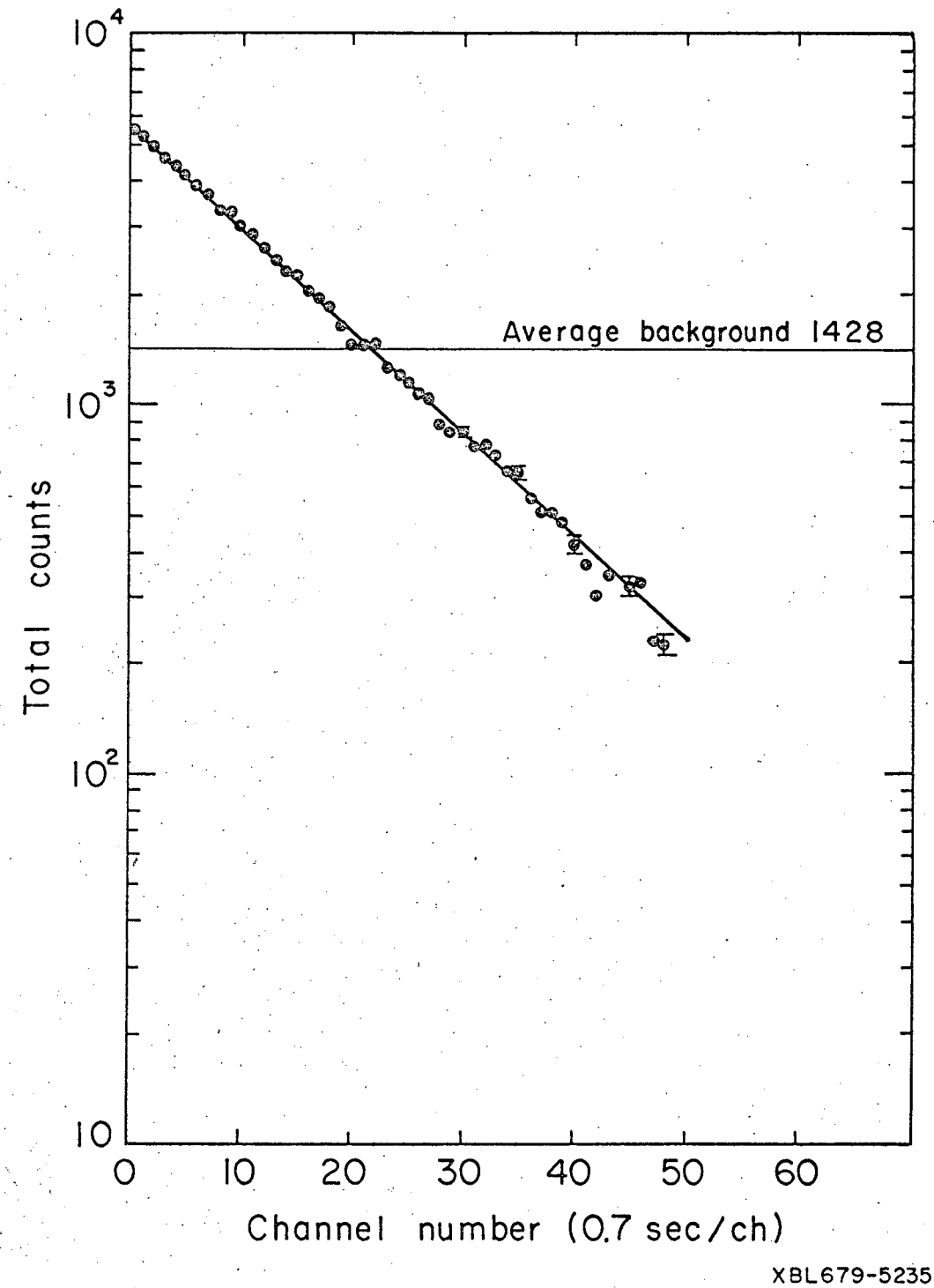

Fig. 12. Au decay curve: counts minus background.

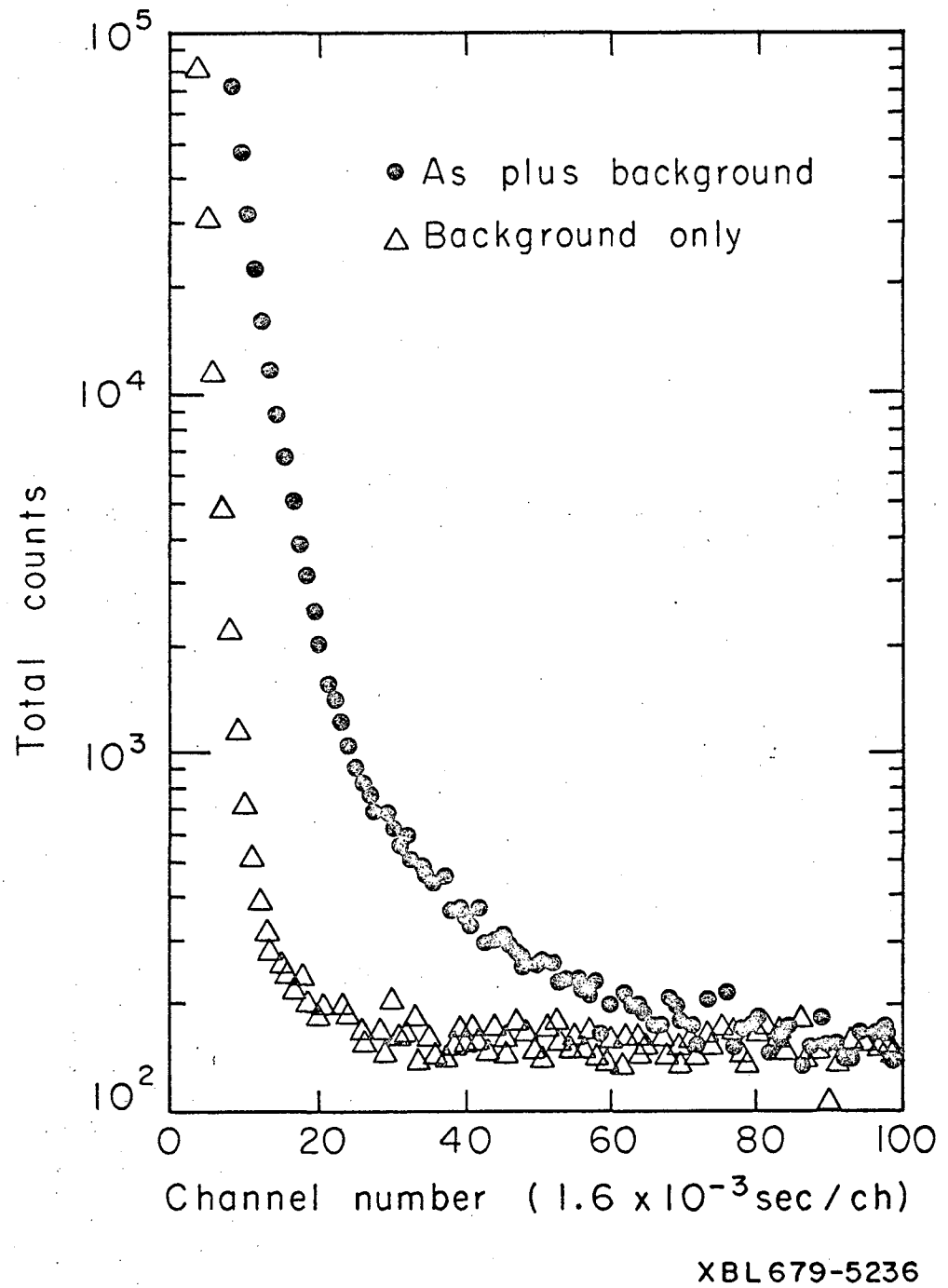

Fig. 13. As decay curves: Gross counts and background.

Table 4

Irradiation Results

Element	Half-life Observed, This work	Half-life, Lukens, et al. Refs. 1,3	Half-life Kaminishi & Kojima, Ref. 2	Half-life	Gamma Energy MeV
				Table of Isotopes, Ref. 9	
$^{75}As^{m}$	17 ± 1 msec			17 msec	0.3040
$^{77}Se^{m}$	16.1±0.7msec	17.5 sec	17.5 sec	17.5 sec	0.161
$^{79}Br^{m}$	4.9±0.1 sec	4.8 sec	4.80 sec	4.8 sec	0.21
$^{89}Y^{m}$	15 ± 1 sec	16 sec	15.0 sec	16 sec	0.91
$^{167}Er^{m}$	2.3±0.1sec	2.5 sec	2.10 sec	2.3 sec	0.2078
$^{179}Hf^{m}$	18.8±0.1sec	19 sec	18.5 sec	18.6 sec	0.375, 0.161
$^{191}Ir^{m}$	5.3±0.3sec	4.9 sec	4.90 sec	4.9 sec	0.12939, 0.0418
$^{197}Au^{m}$	7.36 ± 0.06sec	7.2 sec	7.0 sec	7.2 sec	0.2793, 0.202, 0.1302
$^{73}Ge^{m}$		0.53 sec		0.53sec	0.054, 0.0135
$^{183}W^{m}$		5.5 sec	5.4 sec	5.3 sec	0.2103, 0.10248, 0.09908, 0.05259, 0.04648

Table 5

Experimental Data Conditions

Element	Analyzer Time Base* Time/channel	Irradiation Time/Run	Number of Runs Accumulated for Data	Detector High Voltage, Volts	Main Amplifier Gain †
Se	1.7 sec/ch	1 min	6	1000	8 Lo
Br	0.5 sec/ch	30 sec	16	950	8 Lo
Y	1.6 sec/ch	1 min	9	950	4 Lo
Er	0.25 sec/ch	30 sec	24	950	8 Lo
Hf	2 sec/ch	1 min	6	950	8 Lo
Ir	0.5 sec/ch	30 sec	8	1000	16 Lo
Au	0.7 sec/ch	30 sec	8	950	8 Lo
As	1.6 msec/ch	between beam pulses	10 min accumulation	1000	4 Lo

*Analyzer sweep, 100 channels for all runs

†5 μsec clipping time, 0.2 μsec rise time for all runs.

Accelerator power level; 6.5 MeV, 60 mA, 60 pulses/second (except 6 pulses/sec for As data)

other than (γ,γ') for these isomers can be ruled out on the basis of thresholds and products for other gamma-induced reactions as listed in reference 8.

The half-lives were calculated using the method devised by R. Peierls[10] and further elaborated on by Evans[11]. This method takes into account the superimposition of a rapidly decaying source with changing statistical fluctuations upon a finite background with a constant average rate and is much more accurate than graphical methods. It permits calculation of the error involved and is valid for a single true decay without any transients superimposed.

The method consists of dividing a radioactive source decay curve into equal time intervals, Δt, which are less than one-third the estimated mean life, τ, but long enough to contain a statistically significant number of counts. If ΔN_1 atoms decay during the first interval, the average lifetime is $1/2\ \Delta t$. In the second interval, the average lifetime of the ΔN_2 atoms is $3/2\ \Delta t$. The total lifetimes of all the atoms between $t=0$ and $t = n\Delta t$ are then

$$\Delta N_1 (1/2\ \Delta t) + \Delta N_2 (3/2\ \Delta t) + \Delta N_3 (5/2\ \Delta t) + \ldots$$

$$+ \Delta N_n \left(\frac{2n-1)}{2} \Delta t \right) \qquad (1)$$

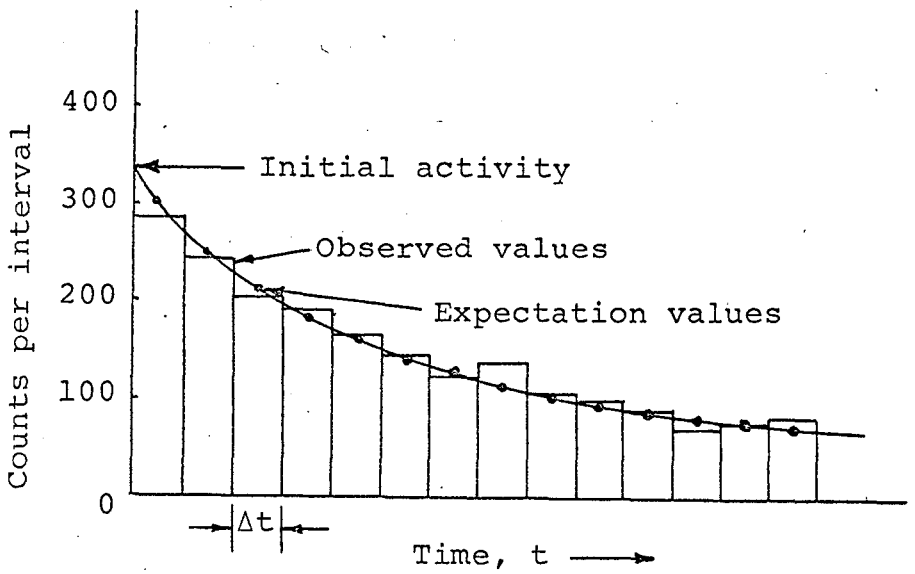

Fig. 14

The total number of atoms is

$$N = \Delta N_1 + \Delta N_2 + \Delta N_3 + \ldots + \Delta N_n \tag{2}$$

and the average life of all the atoms is then

$$S = \frac{\Delta N_1 + 3\Delta N_2 + 5\Delta N_3 + \ldots + (2n-1)\Delta N_n}{\Delta N_1 + \Delta N_2 + \Delta N_3 + \ldots + \Delta N_n} \quad \frac{\Delta t}{2} \tag{3}$$

The expectation value of S is also given by Evans as

$$S = \frac{\int_0^{n\Delta t} t \, dN}{\int_0^{n\Delta t} dN} = \frac{(N_o/\tau) \int_0^{n\Delta t} t \, e^{-t/\tau} \, dt}{(N_o/\tau) \int_0^{n\Delta t} e^{-t/\tau} \, dt} \tag{4}$$

[ref.11,p.814]

$$S = \tau \left[1 - \frac{n\Delta t/\tau}{e^{\frac{n\Delta t}{\tau}} - 1} \right] \tag{5}$$

Since the number of counts due to the decaying source alone, less the background, is proportional to ΔN_i, the latter can be taken as the number of counts in each count interval and equation (3) used to find the average life, S. Equation (5) is then used to find the mean life, τ, by assuming values of τ and iteration. The approximate values for initial trials were found from the inverse of the slopes of Figs. 5 through 12.

The length of the total interval, $T = n\Delta t$, where count data are taken has an optimum, corresponding to the lowest amount of error in the mean life and is dependent on the ratio of the initial activity level to the average background. This was derived by Peierls as

[ref. 10, p. 478]

$$\frac{N(\delta\tau)^2}{\tau^2} = \frac{\sigma}{1-e^{-T/\tau}} + \frac{1}{3\lambda}\left(\frac{\sigma}{1-e^{-T/\tau}}\right)^2\left[\frac{(T-S)^3 + S^3}{\tau^3}\right] \equiv A + \frac{1}{\lambda}B$$

where

$$\sigma = \frac{m(\delta\tau)^2}{2}$$

$$m = N(1-e^{-T/\tau})$$

$\delta\tau$ = error in τ

λ = ratio of net initial activity to average background

A table is presented in reference 10 listing values of A and B for different ratios of T/τ. For any particular λ, there then corresponds a T/τ which results in the minimum value of $N(\delta\tau)^2/\tau^2$.

As mentioned earlier, over-driving effects due to the bremsstrahlung sometimes caused interference with the data in the initial channels of information, thus the effective initial activity had to be taken at the point where the interference

ceased. This was determined from Figs. 5 through 12 and also from the plot of the total count data for each isomer found, using the "peeling" method on the latter to locate deviations from a straight line during the first groups of channels.

A summary of the various values found in the half-life calculations is tabulated in Table 6.

All of the isomers with half-lives shorter than thirty seconds found by Lukens, et al., and Kaminishi and Kojima were reproduced in this experiment with the exception of 0.53 sec $^{73}Ge^{m}$ and 5.5 sec $^{183}W^{m}$. This could be due to the low activity induced in these latter two elements, coupled with the high background present in the target room. The half-lives of the activities found are in good agreement with published values as indicated in Table 4. However, no new activities in this range of lifetimes were found.

The discovery of the 17 msec $^{75}As^{m}$ was reported earlier by Vegors and Axel using a 22-MeV betatron, but this is the first known instance of its being produced by a low energy source. The complete decay curve and also the separate background for this activity are shown in Fig. 13. The effect of the over-driving due to the bremsstrahlung is clearly illustrated in both curves, and the system is not fully free of the effect until some thirty milliseconds or so after the detector has been turned on. Even so, it is quite evident that the induced activity of the As isomer is fairly high.

As stated before, the duration of the over-driving effect increases with aging of a tube. The best condition obtained was at 30 pulses per second, where at about twelve milliseconds, the transient had decayed to less than twice the background level.

Table 6

Calculation Summary

Element	λ	Channel of Initial Activity	$T = n\Delta t$, Channels	N Counts	$\frac{N(\delta\tau)^2}{\tau^2}$	S sec	τ sec	$\frac{\delta\tau}{\tau}$
As	1.26	40	38	2994	12.43	19.048	24.8	6.45%
Se	0.575	8	32	12018	23.69	17.416	23.2	4.4%
Br	1.03	7	34	27685	14.89	5.3752	7.1	2.3%
Y	0.237	2	32	6551	52.51	16.256	22.2	8.96%
Er	0.69	10	35	7391	20.24	2.6303	3.3	3.9%
Hf	0.69	8	34	15621	20.24	21.076	27.1	3.6%
Ir	0.586	17	34	7380	23.29	5.5804	7.6	5.6%
Au	3.9	1	48	83644	5.64	9.1359	10.62	0.82%

Deterioration occurred rather rapidly from this time on with continued use of the tube.

Conclusions

The results of the counting between beam pulses, although somewhat limited here, indicate that the method used is practical and could have further applications with refinements. Since pulses are visible ten microseconds after turning on the detector, the system should be useful for work in the few-microseconds range. In this work the biggest obstacle was the over-driving caused by the bremsstrahlung due in part to not having an ideal installation for carrying out the experiments. With more space available, it would be possible to use heavier shielding and a long collimator for better protection of the photomultiplier tube. However, the presence of the high background does not give in-place counting for activities in the seconds range any advantage over using a very fast transport system for conveying targets to a detector outside the irradiating area.

ACKNOWLEDGMENTS

I would like to express my gratitude to Professor Lawrence Ruby for his guidance, suggestions, and enlightening discussions during the course of the experiments. I would also like to thank Mr. Douglas Pounds of the LINAC facility for his cooperation in operation of the accelerator and Mr. Arthur Kunselman of the Chamberlain group for the loan of the majority of the target samples used.

A special note of thanks goes to Mr. Joseph Rechen of the microtron facility for his invaluable assistance with the many problems which occurred along the way and for the stimulating conversations concerning the nature of the experiments.

This work was performed under the auspices of the U. S. Atomic Energy Commission.

References

1. H. R. Lukens, Jr., J. W. Otvos, and C. D. Wagner, Int. J. of Applied Radiation and Isotopes, 11, 30(1961).
2. T. Kaminishi and C. Kojima, Japanese Journal of Appl. Phys., 2, 7 399(1963).
3. H. R. Lukens, F. M. Graber, and K. I. Perry, Trans. Am. Nucl. Soc., 10, 90(1967).
4. M. Goldhaber and A. W. Sunyar; Phys. Rev., 83, 906(1951).
5. S. H. Vegors, Jr., and P. Axel, Phys. Rev., 101, 1067(1956).
6. K. B. Keller and B. M. K. Nefkens, Rev. of Sci. Inst., 35, 1359(Oct.1964).
7. General Electric Silicon Controlled Rectifier Manual, 3rd ed., (1964).
8. R. J. Howerton, D. Braff, W. J. Cahill, and N. Chazan, "Thresholds for Gamma-Induced Reactions," UCRL-14006, Sept. 1964
9. C. M. Lederer, J. M. Hollander, and I. Perlman, "Table of Isotopes," 6th ed., John Wiley & Sons, Inc., 1967.
10. R. Peierls, Proc. Roy. Soc.(London), A149, 467(1935).
11. R. D. Evans, "The Atomic Nucleus," McGraw-Hill Book Co., 1955.

This report was prepared as an account of Government sponsored work. Neither the United States, nor the Commission, nor any person acting on behalf of the Commission:

A. Makes any warranty or representation, expressed or implied, with respect to the accuracy, completeness, or usefulness of the information contained in this report, or that the use of any information, apparatus, method, or process disclosed in this report may not infringe privately owned rights; or

B. Assumes any liabilities with respect to the use of, or for damages resulting from the use of any information, apparatus, method, or process disclosed in this report.

As used in the above, "person acting on behalf of the Commission" includes any employee or contractor of the Commission, or employee of such contractor, to the extent that such employee or contractor of the Commission, or employee of such contractor prepares, disseminates, or provides access to, any information pursuant to his employment or contract with the Commission, or his employment with such contractor.