Submitted to J. Am. Ceram. Soc.

UCRL-17820 Rev.
Preprint

cy. 2

DIFFERENTIAL THERMAL CALORIMETRIC DETERMINATION OF THE THERMODYNAMIC PROPERTIES OF KAOLINITE

Patrick S. Nicholson and Richard M. Fulrath

RECEIVED
LAWRENCE
RADIATION LABORATORY
JUL 14 1969
LIBRARY AND
DOCUMENTS SECTION

June 1969

AEC Contract No. W-7405-eng-48

TWO-WEEK LOAN COPY

This is a Library Circulating Copy which may be borrowed for two weeks. For a personal retention copy, call Tech. Info. Division, Ext. 5545

LAWRENCE RADIATION LABORATORY
UNIVERSITY of CALIFORNIA BERKELEY

UCRL-17820 Rev.

cy. 2

DISCLAIMER

This document was prepared as an account of work sponsored by the United States Government. While this document is believed to contain correct information, neither the United States Government nor any agency thereof, nor the Regents of the University of California, nor any of their employees, makes any warranty, express or implied, or assumes any legal responsibility for the accuracy, completeness, or usefulness of any information, apparatus, product, or process disclosed, or represents that its use would not infringe privately owned rights. Reference herein to any specific commercial product, process, or service by its trade name, trademark, manufacturer, or otherwise, does not necessarily constitute or imply its endorsement, recommendation, or favoring by the United States Government or any agency thereof, or the Regents of the University of California. The views and opinions of authors expressed herein do not necessarily state or reflect those of the United States Government or any agency thereof or the Regents of the University of California.

DIFFERENTIAL THERMAL CALORIMETRIC DETERMINATION OF THE THERMODYNAMIC PROPERTIES OF KAOLINITE

Patrick S. Nicholson* and Richard M. Fulrath

Inorganic Materials Research Division, Lawrence Radiation Laboratory,
and Department of Materials Science and Engineering,
College of Engineering, University of California,
Berkeley, California

ABSTRACT

June 1969

Four samples of kaolinite were investigated to determine the exothermic reaction enthalpy by differential thermal calorimetry. The measured 9 kcal/mol for the 980°C exothermic reaction enthalpy corresponds to the calculated heat of crystallization of silica at this temperature. Literature evidence available discounts the crystallization of the other two participating phases, mullite and silicon spinel. An NaOH extraction technique was used to remove the amorphous silica from a 850°C-fired kaolinite and this extraction removed the 980°C exotherm. It was concluded, therefore, that the majority of the heat release at 980°C on firing kaolinite accompanies the reaction

$$SiO_2(\text{amorphous}) \rightarrow SiO_2(\beta\text{-quartz})$$

---

* Visiting assistant professor, Division of Materials Science and Engineering, College of Engineering, University of Utah, Salt Lake City, Utah.

Supported by the United States Atomic Energy Commission under Contract W-7405-eng-48.

At the time this work was done the writers were, respectively, research assistant and professor of ceramic engineering, Department of Materials Science and Engineering, College of Engineering, and Inorganic Materials Research Division, Lawrence Radiation Laboratory, University of California, Berkeley.

I. INTRODUCTION

The clay mineral, kaolinite, has been extensively studied during the past 17 years. This mineral is known to undergo an endothermic reaction at about 550°C resulting from the loss of structural water. A sharp exothermic reaction also takes place at about 980°C. The exact origin of this reaction, however, is a subject of considerable controversy. Although the existence of both these reactions has been known for some time, no accurately reproducible values of the enthalpy of either of them has been measured. The following work was undertaken to measure the enthalpy of these reactions and from the information so obtained better describe the reaction involved in the 980°C exotherm.

One of the most powerful tools available for the qualitative investigation of high temperature reactions is differential thermal analysis (D.T.A.). D.T.A. traces of typical kaolins are shown in Fig. 1. D.T.A. curves for kaolinite show an exothermic reaction between 900 and 1000°C. A further, but much smaller, exotherm is observed at 1250°C with the abrupt appearance of mullite in abundance and cristobalite.

The exothermic reaction of metakaolin at 980°C poses a complex problem. The work of Brindley and Nakahira[1,2] is now accepted as an explanation of the phase changes that occur at this temperature. They postulated that instead of a number of phases linked together by chemical reactions exclusively, the reaction series can be viewed as having a large degree of structural continuity. They quote the work of Comefero, Fischer and Bradley[3] and Comer, Koenig and Lyons[4] who demonstrated by electron microscopy that mullite needles develop in directions related to the original kaolinite flakes. When heated to 950°C they found that

the metakaolin transformed into a cubic phase with a spinel structure having a high degree of preferred orientation with respect to the parent material. It appeared that the cubic phase has the (110) direction parallel to the b-direction of the kaolinite or metakaolin and that the (111) direction is perpendicular to the cleavage plane.

Brindley and Nakahira suggest that the aluminum-silica spinel has an oxide composition of $2Al_2O_3$, $3SiO_2$ and they observe that for this to transform to mullite, silica must diffuse from the structure. The advantage of the theory put forward by Brindley and Nakahira is that it explains the topitaxial relationship experimentally observed by Comefero, Fischer and Bradley and Comer, Koenig and Lyons.

The exact phase whose appearance causes the observed exothermic reaction at 980°C is a point of controversy. Some consider the appearance of the mullite phase as the reason and others hold the spinel phase responsible. Authors supporting the spinel explanation are Colgrave and Rigby,[5] Stone,[6] and Brindley and Nakahira,[1] and most recently Tsuzuki.[7] On the other hand, Insley and Ewell[8] showed that on heating co-precipitated alumina and silica to 980°C an exothermic reaction of the same order as that of kaolinite was observed. It is very unlikely that the spinel would develop in such a case. However, mullite might be produced. Glass[9] observes that the formation of a dense hard phase much more easily explains the observed exotherm than does a subcrystalline compound such as defect spinel. This opinion is also held by Comefero, Fischer and Bradley.[3] Roy, Roy and Francis[10] in their electron diffraction work, detected the spinel phase in kaolinite at 850°C and at 650°C in halloysite. In both cases, however, the exothermic peak was observed at 980°C.

Likewise, Comer[11] endeavoring to observe the Brindley spinel with an electron microscope, identified both spinel and mullite in a kaolinite flake fired to 850°C. It is important to note that in order to observe the spinel and mullite, Comer first had to remove the amorphous silica present by an alkaline extraction technique. In the same experiments he observed the spinel to disappear at about 950°C while mullite increased rapidly.

Considering the thermodynamics of the proposed reactions, the contribution of Schieltz and Soliman[12] is of great significance. They considered a series of reactions which metakaolin might undergo and from the known enthalpy and entropy values arrived at a free-energy value for each reaction. In this way they concluded that the reaction

$$\text{metakaolin} = \frac{1}{3}\,\text{mullite} + \frac{4}{3}\,SiO_2\ (\text{crystalline})$$

is most favorable. Considering the enthalpy change embodied in each of the possible reactions and the energy of crystallization of each phase involved, they solved the thermodynamic equations simultaneously and found the crystallization energy of mullite to be -336 kcal/mole; the spinel -36.5 kcal/mol and quartz -7 kcal/mol. Considering the most favorable reaction they estimated the contribution of the silica crystallization as -9.6 kcal. They neglected, however, to compare the resultant theoretical enthalpy with any experimentally determined values. De Bruijn and Van der Marel[13] estimated the heats of transformation of forty-two minerals. They utilized the D.T.A. technique associating the areas of differential temperature peaks obtained with the enthalpy of the reaction taking place. One of the minerals investigated was kaolinite and they

estimated the heat released at the 980°C exotherm between 5kcal/mol and 8 kcal/mol. In the same year Sabatier,[14] also using D.T.A. measured the reaction heats for six minerals including kaolinite and observed values in the De Bruijn-Van der Marel range. Neither De Bruijn and Van der Marel nor Sabatier utilized their results to postulate what reaction might be the source of the exotherm. D.T.A. results must, however, be suspect as the reaction is very sharp and quantitative D.T.A. inaccurate.

II. EXPERIMENTAL

The technique used in this investigation was that of differential thermal calorimetry (D.T.C.).[15] The basic principle of D.T.C. is to supply or subtract heat to or from a reacting system so as to maintain the temperature at some point in the system the same as that of a similar point in a physically inert system. A small heater is used to supply the necessary heat and the power supplied to this heater is monitored. In this way the unknowns in the thermodynamic equation can be evaluated:

$$H_T = H_{298} + \int_{298}^{T} C_p \, dt$$

H_T = Heat content at T°K

H_{298} = Heat content at 298°K

C_p = Heat capacity at constant pressure

The heat contents and reaction heats were determined by D.T.C. on samples of kaolinite. Four samples from different geographical areas of the United States were investigated. These kaolins were chosen for their freedom from impurities. Three of the samples were A.P.I. standard kaolins[16] and the fourth a Georgia kaolin. Hereafter, the four samples

will be referred to as API 4, API 9, API 17 and DRG kaolin. Chemical analyses of each clay are given in Table I.

Each clay sample was ground, ball-milled and sieved through a 200 mesh sieve. Half of each sample was then fired at 1050°C and the other half dried at 110°C. Calorimeter samples were obtained by carefully remixing a 50/50 combination of the 110°C and 1050°C treated samples. This procedure was necessary owing to the magnitude of the heats to be measured. The calorimeter cell was carefully packed with about 16 grams of sample. Two estimations of the 980°C exotherm were made on each of the API clays. Five exothermic estimations were made on the DRG sample. A typical exothermic D.T.C. peak is shown in Fig. 2. Also, a sample of DRG metakaolin was alkali treated to remove the amorphous silica. The technique used was the same as that employed by Comer. The clay was heated for 20 hours at a temperature of 900°C. Upon removal from the furnace it was treated with a 10% sodium hydroxide solution for one week. It was then washed in distilled water and rinsed with ethyl alcohol and allowed to dry. Samples of this clay were run in the differential thermal calorimeter. A multi-sample D.T.A. run was also made on raw DRG, 850°C-fired DRG untreated with NaOH and the 850°C-fired NaOH treated DRG. The trace obtained is shown in Fig. 3. The measured results for all the D.T.C. runs undertaken are given in Table II.

III. DISCUSSION

The results obtained for the 980°C exotherm are extremely interesting because their magnitude allows a new interpretation of this controversial reaction. Schlietz and Soliman[12] calculated the heat of crystallization of mullite to be -336 kcal/mol, of the alumina-silica spinel

-36.5 kcal/mol, and of silica -7 kcal/mol. They obtained these values by simultaneously solving the enthalpy-equations for the six possible metakaolin reactions. The only crystallization enthalpy in approximate agreement with the D.T.C. results is that of silica. The authors, utilizing the Schlietz-Soliman summary of reliable values of thermodynamic properties of kaolinite and its products, estimated the enthalpy of crystallization of one mole of amorphous silica at 1000°C as follows:

ΔH_{298} for β-quartz = -209,900 cal/mol

$C_p = 14.41 + 1.94 \times 10^{-3}T$

ΔH_{298} for SiO_2 glass = -202,000 cal/mol

$C_p = 13.38 + 3.68 \times 10^{-3}T - 3.45 \times 10^{-5}T^{-2}$

From

$$\Delta H_{1280°K} = H_{298} + \int_{298}^{1280} \Delta C_p dT$$

$\Delta H_{1280°K}$ (SiO_2 glass → β-quartz) = 9.1 kcal/mol.

This result is extremely close to the measured value.

Three phases are known to be present at the 980°C exotherm, i.e., mullite, silicon spinel and silica. Brindley and Nakahira[1] consider the exotherm to be the result of the condensation of the metakaolin layers to form the spinel-type phase. However, as reported earlier, Roy, Roy and Francis[10] observed the cubic spinel phase at 850°C in the case of kaolinite and at 650°C in the case of halloysite. On heating both samples to 980°C the exotherm was observed. This evidence alone would discount spinel formation as being the reason for the heat release. It has been pointed out[1,2] that the reaction series is a continuous process rather than an intermittent one. Hence, there is no reason why the spinel

phase which has been continuously appearing should give rise to the sudden sharp exothermic reaction such as observed at 980°C. The same argument will also apply to the mullite phase. Comer[11] observed mullite at 850°C. Brindley and Hunter,[17] on the other hand, feel that "It is still necessary to explain the apparent absence of mullite after the exothermic effect." The only phase remaining is the amorphous silica. This silica has been continuously discarded during the spinel and mullite crystallization and it could be that the concentration of silica at 980°C is such as to favor a sudden crystallization.

The measured heat corresponds to the crystallization of one mole of silica/mole of original kaolinite. This amount of silica corresponds to a mullite composition of $Al_2O_3:SiO_2$. Although no such phase has ever been experimentally observed on heating kaolinite, its existence was tentatively suggested in this connection by Brindley and Nakahira.[1] To form the conventional 3:2 mullite, it is necessary to discard 4/3 mole of silica/mole of original kaolinite. Were such amounts of amorphous silica discarded, the calculated heat release on its crystallization would be approximately 12 kcal/mol of silica. However, as pointed out by Brindley and Nakahira: "It appears that the mullite at lower temperatures are not strictly the same as the 3:2 type and at the lower temperatures some of the excess silicon ions may still be distributed among the interstitial sites of the mullite lattice." This, it is postulated, would account for the crystallization of only one mole of the silica.

In the case of montmorillonite, another clay mineral, β-quartz has been observed after the 980°C exotherm. Grim and Bradley[18] observed a quartz phase to develop suddenly in montmorillonite at a temperature of

1000°C. Ross and Hendricks[19] noted that if a montmorillonite specimen has no Al^{+3} substitution for Si^{+4}, then quartz is obtained on firing. If, however, some Al^{+3} is tetrahedrally substituted in the silica layers than a spinel phase also appears. Montmorillonite and kaolinite are both clay minerals; however, montmorillonite possesses two silica sheets. A marked characteristic of kaolinite is the lack of tetrahedral site substitution that occurs in the mineral. Were the two minerals to behave in a similar manner on heating therefore, the Ross-Hendricks criteria would predict the formation of β-quartz. It should be emphasized here that the similarity of high temperature behavior of montmorillonite and kaolinite is merely hypothesized; β-quartz has yet to be experimentally proven as present after the 980°C kaolinite exotherm. Reporting at the 5th National Congress on clays and clay minerals, Kulbicki[20] observed on the heating of montmorillonite: "the first crystalline product to appear is β-quartz at temperatures ranging from 910°C to 1200°C." Similar observations were made by Grim and Kulbicki[21] and later by Wahl and Grim.[22] Owing to the proximity of the SiO layers in montmorillonite, the X-ray appearance of β-quartz is easily understood. In kaolinite the SiO layers are separated by an AlO octahedral layer and consequently any β-quartz crystallites will be much smaller and hence not detectable by X-ray techniques. However, the precedent for the formation of β-quartz can be considered well established.

One of the striking points about the exotherm is the consistency of the temperature at which it occurs for diverse alumino-silicates.[10] The exact temperature at which the peak occurs depends on such factors as particle size and heating rate, but these two variables could not produce

the large change of temperature required to explain the exotherm as the crystallization of the spinel or mullite. Speil et al.[23] investigating the effect of particle size on the exothermic D.T.A. peak of kaolinite, noticed that the peak occurs over a range from approximately 950°C to 980°C for a particle size ratio of 1:200. On the effect of the heating rate, Smothers and Chang[24] state that: "for a rapid transition and those which are not accompanied by a loss of weight, the initial transition temperature is not greatly affected by the changes in the rate of heating." Barshad,[25] using small amounts of compounds having relatively sharp transitions, found that the rate of heating had no effect on the temperature defining the initial thermal breaks. Arens[26] working with kaolinite observed that a three-fold increase in the heating rate produced a peak temperature difference of 65°C. Comer observed mullite at 850°C and this would require a peak shift of 130°C. Hence, it can be concluded that these factors could not induce the exothermic peak to move over the temperature range required to associate it with the reported appearance of the spinel and the mullite phases.

The remarkable agreement between the experimental and theoretical enthalpies is perhaps the strongest evidence in favor of the quartz crystallization hypothesis. Scheitz and Soliman[12] note that: "The X-ray patterns made at room temperature of kaolinite and halloysite that had been heated at 950°C from 20 to 40 minutes showed small crystallites of alpha-quartz." This, however, is the only observation recorded in the literature.

If the crystallization of quartz does, in fact, cause the exotherm, then removal of the discarded amorphous silica should eliminate the

exotherm. The NaOH-treated DRG samples showed no exothermic peak in either the D.T.C. or D.T.A. runs. It is possible that the NaOH treatment also removes a good deal of the metakaolin. This would also remove the exotherm. Comer[11] however, observed mullite, spinel and the metakaolin matrix in his electron-micrographs after the NaOH treatment.

Hence, it can be concluded that the removal of amorphous silica as per Comer, in fact, eliminates the 980°C exotherm, thereby supporting the quartz crystallization hypothesis.

IV. CONCLUSION

Of the possible crystallizations that could give rise to such an exotherm, that of silica is the most reasonable. Both mullite and silicon-spinel have been observed at temperatures below that of the exothermic reaction reported range. Also, if the appearance of these two phases is to be considered a continuous process, then there is no reason to expect a sharp crystallization at 980°C. Therefore, it is suggested that the majority of the exothermic enthalpy accompanies the reaction:

$$SiO_2 \text{ (amorphous)} \rightarrow SiO_2 \text{ (}\beta\text{ quartz)}$$

The calculated heat of this reaction is 9.1 kcals/mol. This value agrees very closely with that observed in the D.T.C. measurements. It must be emphasized, however, that it is not possible to completely discount any contribution of the mullite-spinel crystallizations to this enthalpy. Such contributions can, however, be reasonably considered as minor.

Utilization of the Comer-NaOH extraction technique to remove the amorphous silica from an 850°C-fired kaolinite also removed the 980°C

exotherm. This is further evidence in favor of the SiO_2 crystallization.

ACKNOWLEDGMENT

This work was done under the auspices of the United States Atomic Energy Commission.

REFERENCES

1. G. W. Brindley and M. Nakahira, "The Kaolinite-Mullite Reaction Series I," J. Am. Ceram. Soc. 42, 311 (1959).

2. G. W. Brindley and M. Nakahira, "The Kaolinite-Mullite Reaction Series II," Ibid, 314.

3. J. E. Comefero, R. B. Fischer and W. F. Bradley, "Mullitization of Kaolinite," J. Am. Ceram. Soc. 31, 254 (1948).

4. J. J. Comer, J. H. Koenig and S. C. Lyons, "What are Ceramic Bodies Really Like?", Ceram. Ind. 67, 125, 148, 150 (1956).

5. E. G. Colgrave and G. R. Rigby, "Decomposition of Kaolinite by Heat," Trans. Brit. Ceram. Soc. 51, 355 (1952).

6. R. L. Stone, "D.T.A. of Kaolin Group Minerals Under Controlled Partial Pressures of H_2O," J. Am. Ceram. Soc. 35, 90 (1952).

7. V. Tsuzuki, "Mechanism of the 980° Exotherm of Kaolin Minerals," J. of Earth Sciences, Nogoya University 9, 305 (1961).

8. H. Insley and R. H. Ewell, "Thermal Behavior of the Kaolin Minerals," J. Res. Nat. Bur. Stds., 14 (5), 615 (1935).

9. H. D. Glass, "High Temperature Phases of Kaolinite and Halloysite," Am. Min. 39, 193 (1954).

10. R. Roy, D. M. Roy, and E. E. Francis, "New Data on Thermal Decomposition of Kaolinite and Halloysite," J. Am. Ceram. Soc. 38, 198 (1955).

11. J. J. Comer, "New Electron Optical Data on the Kaolin-Mullite Transformation," J. Am. Ceram. Soc. 44, 561 (1961).

12. N. C. Schlietz and M. R. Soliman, "Thermodynamics of the Various High Temperature Transformations of Kaolinite," 13th National Conf. on Clays and Clay Min., (Pergamon Press), p. 419.

13. DeBruijn and Van der Marel, "Mineralogical Analysis of Soil Clays II. Examples of Mineral Analysis by X-ray Diffraction and D.T.A., Geol. en Mijnbouw, 16e, 407-28 (1954).

14. G. Sabatier, "Measure of Heats on Transformation by D.T.A.," Bull. Soc. Franc Mineral, 77, 953 (1954).

15. P. S. Nicholson and R. M. Fulrath, "Heat Transfer Considerations in Differential Calorimeter Design," (Submitted to J. Am. Ceram. Soc. 1969).

16. American Petroleum Institute Project 40, "Clay Mineral Standards," Columbia University, 1949-1950.

17. G. W. Brindley and K. Hunter, "The Thermal Reactions of Nacrite and the Formation of Metakaolin," Aluminum and Mullite, Min. Mag. 30, 574 (1955).

18. W. F. Bradley and R. E. Grim, "High Temperature Thermal Effects of Clays and Related Minerals," Am. Min. 36, 182 (1951).

19. O. S. Ross and S. B. Hendricks, U. S. Geol. Survey, Prof. paper 205B, (1945).

20. G. Kulbicki, "High Temperature Phases of Montmorillonites," 5th National Conference on Clays and Clay Minerals, 1956, Publication 566 (National Academy of Sciences, 1958).

21. R. E. Grim and G. Kulbicki, "Montmorillonite: High Temperature Reactions and Classification," Am. Min. 46, 1329 (1961).

22. F. M. Wahl and R. E. Grim, "High Temperature D.T.A. and X-ray Diffraction Studies of Reactions," Proc. 12th National Conf. on Clays and Clay Minerals, 1963. (Pergamon Press, 1946).

23. S. Speil, L. H. Berkelheimer, J. A. Pask and B. Davies, "Differential Thermal Analysis--its Application to Clays and Other Aluminuous Materials," U. S. Bureau Mines Tech. Paper 664 (1945).

24. W. J. Smothers and Y. Chang, "Differential Thermal Analysis (P. 47), Chemical Publishing Co. (1958).

25. I. Barshad, "Temperature and Heat of Reaction Calibration of the D.T.A. Apparatus," Am. Min. 37 667 (1952).

26. P. L. Arens, "A Study of the Differential Thermal Analysis of Clays and Clay Minerals," Wagneningen, Netherlands (1951).

Table I. Chemical Analyses of Kaolinite Samples

	API 4*	API 9*	API 17*	DRG **
SiO_2	44.82%	46.07%	45.72%	47.24%
Al_2O_3	37.20	38.97	39.82	35.72
Fe_2O_3	0.41	0.33	0.10	0.27
FeO	0.07	--	--	0.06
MgO	0.25	0.01	trace	0.47
CaO	0.58	0.38	trace	0.52
Na_2O	0.40	0.27	0.16	0.36
K_2O	0.43	0.43	0.36	0.49
H_2O	14.68	13.90	14.22	14.82
TiO_2	1.26	0.50	0.42	0.26
Total	100.10	99.96	100.80	100.21

* American Petroleum Institute

** Chemical analysis given by supplier.

Table II. D.T.C. Values for the Endothermic and Exothermic Reactions of Kaolinite

Material	Reaction	ΔH (kcal/mol)
API 4	550°C endotherm	35 44
API 9	550°C endotherm	39 41
API 17	550°C endotherm	39 39
API 4	980°C exotherm	9.1 8.5
API 9	980°C exotherm	8.4 8.3
API 17	980°C exotherm	8.3 8.7
DRG	550°C endotherm	48 47 45
DRG	980°C exotherm	8.7 9.2 8.8 8.7 8.7
DRG (NaOH treated)		0

FIGURE CAPTIONS

Figure 1. Typical D.T.A. traces for kaolinites

Figure 2. A typical D.T.C. peak for the 980°C exotherm of kaolinite

Figure 3. Multipoint D.T.A. curves for raw D.R.G. kaolin;
850°C-fired D.R.G. kaolin (untreated);
850°C-fired D.R.G. kaolin (NaOH treated).

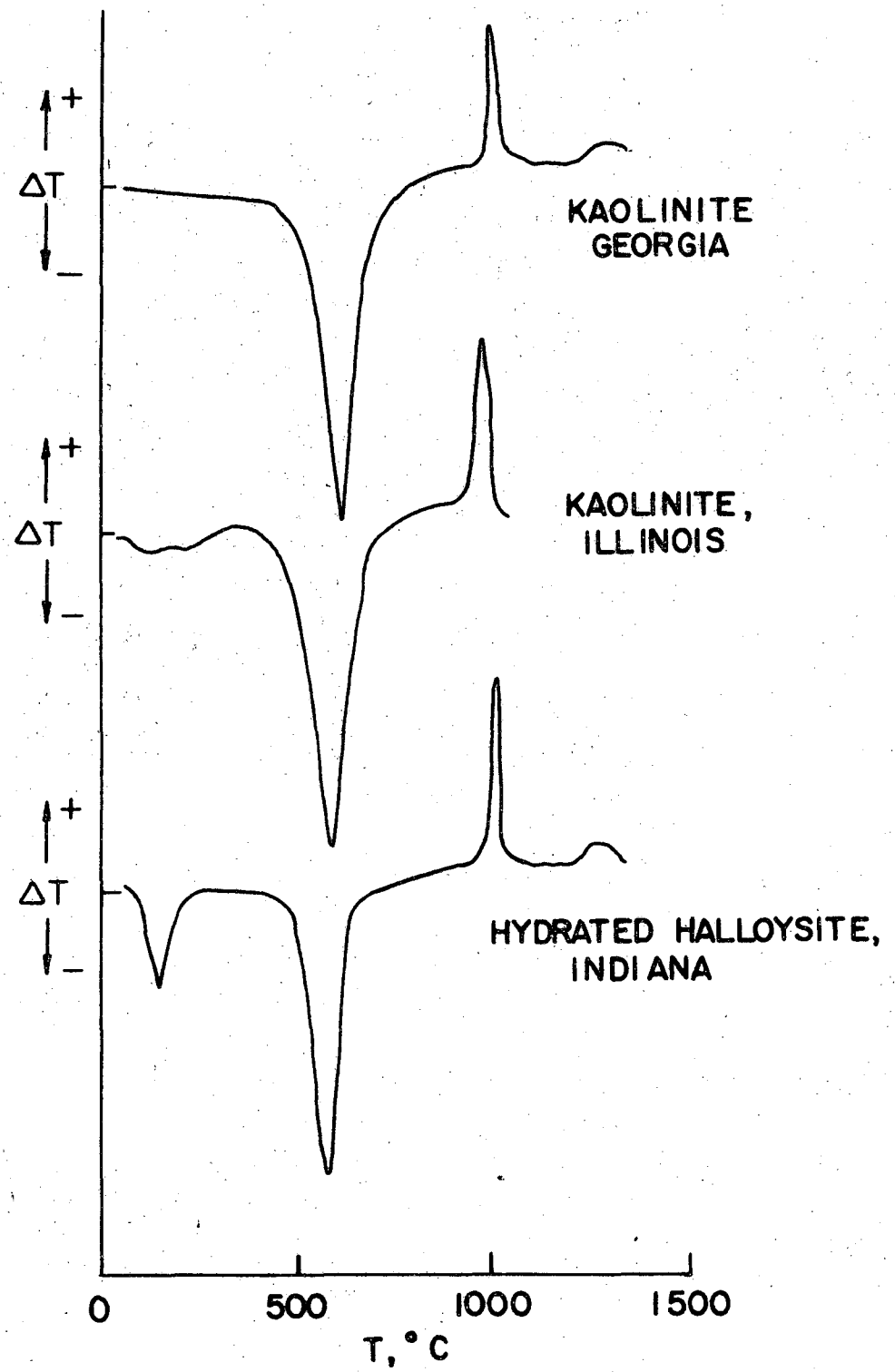

Fig. 1 Typical D.T.A. Traces for Kaolinites

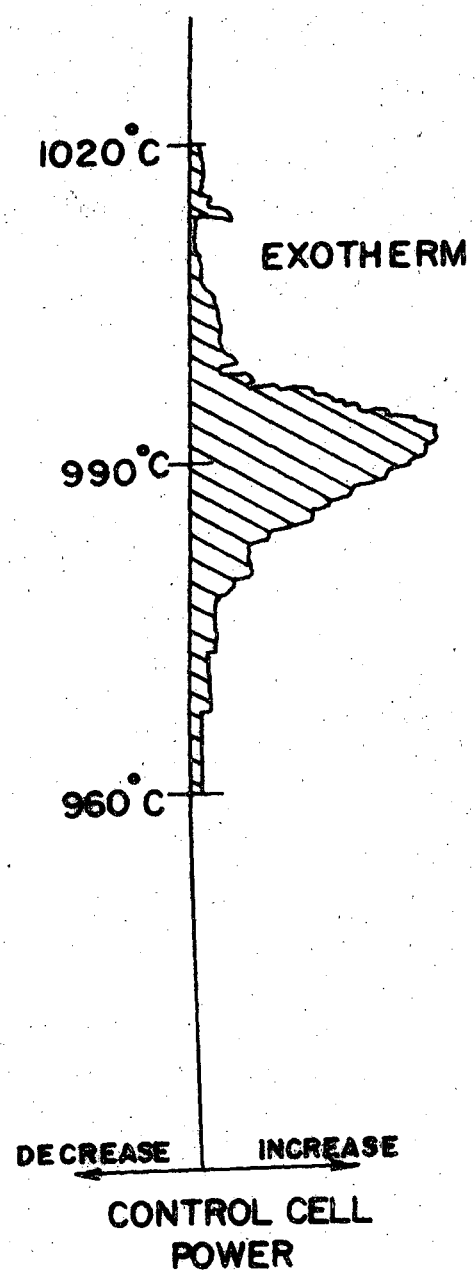

Fig. 2 A Typical D.T.C. Peak For The 980 °C Exotherm of Kaolinite

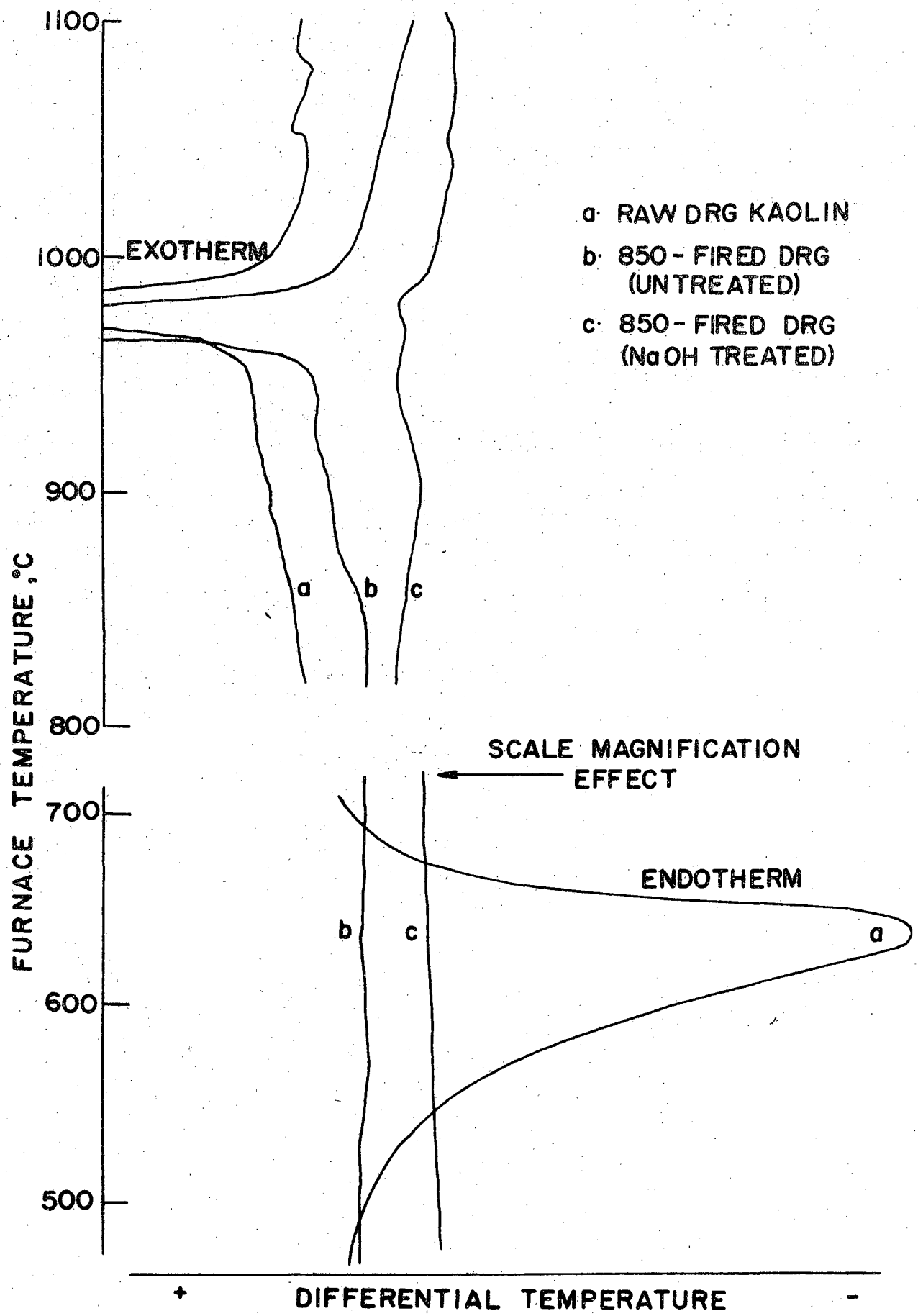
1100
1000
900
800
700
600
500
FURNACE TEMPERATURE, °C
EXOTHERM
a
b
c
a· RAW DRG KAOLIN
b· 850-FIRED DRG (UNTREATED)
c· 850-FIRED DRG (NaOH TREATED)
SCALE MAGNIFICATION EFFECT
ENDOTHERM
b
c
a
+
DIFFERENTIAL TEMPERATURE
-

Fig· 3

LEGAL NOTICE

This report was prepared as an account of Government sponsored work. Neither the United States, nor the Commission, nor any person acting on behalf of the Commission:

A. Makes any warranty or representation, expressed or implied, with respect to the accuracy, completeness, or usefulness of the information contained in this report, or that the use of any information, apparatus, method, or process disclosed in this report may not infringe privately owned rights; or

B. Assumes any liabilities with respect to the use of, or for damages resulting from the use of any information, apparatus, method, or process disclosed in this report.

As used in the above, "person acting on behalf of the Commission" includes any employee or contractor of the Commission, or employee of such contractor, to the extent that such employee or contractor of the Commission, or employee of such contractor prepares, disseminates, or provides access to, any information pursuant to his employment or contract with the Commission, or his employment with such contractor.