UCRL-17896
cy. 2

University of California

Ernest O. Lawrence Radiation Laboratory

R-F PLASMA MICROSPHEROIDIZATION OF CERAMICS

Randolph Tilden Tremper
(M. S. Thesis)

December 1967

RECEIVED
LAWRENCE
RADIATION LABORATORY

LIBRARY
DOCUMENTS

UCRL-17896
cy. 2

TWO-WEEK LOAN COPY

This is a Library Circulating Copy which may be borrowed for two weeks. For a personal retention copy, call Tech. Info. Division, Ext. 5545

DISCLAIMER

This document was prepared as an account of work sponsored by the United States Government. While this document is believed to contain correct information, neither the United States Government nor any agency thereof, nor the Regents of the University of California, nor any of their employees, makes any warranty, express or implied, or assumes any legal responsibility for the accuracy, completeness, or usefulness of any information, apparatus, product, or process disclosed, or represents that its use would not infringe privately owned rights. Reference herein to any specific commercial product, process, or service by its trade name, trademark, manufacturer, or otherwise, does not necessarily constitute or imply its endorsement, recommendation, or favoring by the United States Government or any agency thereof, or the Regents of the University of California. The views and opinions of authors expressed herein do not necessarily state or reflect those of the United States Government or any agency thereof or the Regents of the University of California.

UCRL-17896

UNIVERSITY OF CALIFORNIA

Lawrence Radiation Laboratory
Berkeley, California

AEC Contract No. W-7405-eng-48

R-F PLASMA MICROSPHEROIDIZATION OF CERAMICS

Randolph Tilden Tremper

(M.S. Thesis)

December 1967

R-F PLASMA MICROSPHEROIDIZATION OF CERAMICS

Contents

Abstract		v
I.	Introduction	1
	A. Uses of Microspheres	1
	B. Definition of a Plasma	2
	C. Generation of Plasmas	4
	D. Spheroidization	8
II.	Equipment	12
	A. Description	12
	B. Operation	17
III.	Nozzle Design	18
IV.	Experimental Results	23
V.	Conclusions	34
Acknowledgments		35
References		36

R-F PLASMA MICROSPHEROIDIZATION OF CERAMICS

Randolph Tilden Tremper

Inorganic Materials Research Division, Lawrence Radiation Laboratory,
and Department of Mineral Technology, College of Engineering,
University of California, Berkeley, California

ABSTRACT

December 1967

The use of the r-f induction coupled plasma generator for the spheroidization of ceramic powders was studied and an attempt was made to optimize several of the design and operating parameters of the equipment. The most important problem to be overcome was the design of a powder injection nozzle which would give a laminar flow pattern so that accurate placement of the powder in the plasma flame could be accomplished. Attempts were made, with varying degrees of success, to spheroidize SiO_2, NiO, and α-Al_2O_3.

I. INTRODUCTION

The models used for the derivation of mathematical expressions of the sintering process, especially in the initial stages, involve packing of spherical particles. A very limited number of studies have used spherical particles due to the difficulty in producing them in the micron size range. Coble[1] produced microspheres by passing powders through an electric arc. Das[2] was able to produce ceramic microspheres using a dc plasma jet. A major problem which Das encountered was the injection of the powders into the plasma flame. This must be done tangentially with the dc unit. In this work, spheroidization was attempted with a r-f induction coupled plasma generator, with emphasis being placed on the design of an injection nozzle which could be used to accurately place the powder feed in the plasma flame.

A. Uses of Microspheres

In many fundamental studies of ceramic systems, the use of spherical particles is desirable. In all of the original work done on sintering, which includes the work of Clark and White,[3] Kuczynski,[4] Kingery and Berg,[5] and Pines,[6] a theoretical model was used in which all of the particles were uniformly sized spheres. This type of model is used as a basis for all of the accepted theories on sintering of solid particles. Thus, it is very desirable to have uniformly sized ceramic microspheres available with which sintering experiments can be carried out.

Modern reactor technology, in particular that portion of fuel element technology based on dispersion type elements, requires the use of spherical particles. Spherical particles minimize the surface area of a given volume of fuel, thus reducing reactivity with the environment during

fabrication and use. Spherical particles possess greater structural integrity than irregularly shaped particles. Spherical particles are less likely to produce stress concentrations in the matrix material during fabrication. As an additional advantage, spherical particles are more readily coated with a uniform deposition of a refractory metal when this step is employed in fabrication.[7]

Another important use for ceramic microspheres is in the study of the mechanical properties of two-phase brittle matrix ceramic composites. A theory for micromechanical stress concentrations around spherical particles dispersed in another phase has been formulated by Goodier,[8] and Edwards.[9] Experimental work has been done by Hasselman and Fulrath,[10,11] Jacobson,[12] Bertolotti,[13] and Nason[14] showing how dispersed spheres in a brittle ceramic matrix affects the mechanical properties of the composite.

In these areas of ceramic research, the model on which the theory is based is often dependent upon the use of uniform microspheres. Thus it is very important to be able to produce ceramic microspheres with which these models can be tested. In this study, an attempt was made to produce these spheres with an r-f induction coupled plasma jet.

B. Definition of a Plasma

One of the features of today's rapidly advancing technology is the interest in high temperatures. The reasons for this are well known and are far too numerous to even begin a list. Ordinary chemical sources of heat are limited as to the temperatures they can produce. The oxyacetylene flame has a maximum temperature of 3380°K. One of the highest chemically produced temperatures, 6000°K, is obtained from the combustion of carbon subnitride. Solar furnaces can reach a maximum temperature of

4000°K. In order to achieve temperatures higher than this, we must look to other methods than the traditional electrical and chemical ones. It has been found that the plasma state is the source of the highest continuously controllable temperatures available today.[15]

The classical definition of a plasma states that it is an appreciably ionized gas or vapor which conducts electricity and is at the same time electrically neutral, fluid, hot, and viscous. The modern definition is less restrictive and includes ionized gases produced by shock waves and other devices in which there is no flow of electrical current. Ionized gases present in gas discharges and other electric phenomena which are not hot are also plasmas by the modern definition.

The two different types of plasmas, low pressure and high pressure, behave differently in an electric field.[16] In low-pressure plasmas--10^{-3} atm or less--collisions between electrons and the gas atoms and ions are relatively rare. When the electron finally does strike an atom, it has gained enough energy to knock off an electron or at least excite the atom, and thereby cause it to emit light. Low pressure plasmas are in common use in fluorescent lighting.

In high pressure plasmas--1 atm or more--the mean free path of the electron becomes much smaller, which means there are many more collisions per atom per second. Although the amount of energy transfer between electrons and atoms is still small per collision, there are enough collisions to assure that there is thermal equilibrium among the particles. This high degree of excitation (high collision rate) from the influence of electric field is the major factor in producing high temperatures in a plasma.

Figure 1[16] shows a plot of heat content of gases as a function of temperature. For monatomic gases, such as argon, the heat content goes up quite slowly with temperature until the molecules begin to ionize at about 11,000°K. At this point, the heat content rises rapidly. For diatomic gases, such as oxygen, a region of dissociation occurs before ionization can occur at 9000°K. It can be seen that much less energy is required to form a plasma with argon (70 kcal/mole) than with oxygen (220 kcal/mole).

C. Generation of Plasmas

The most common and easiest method of generating a plasma is the electric arc where a large current is passed through a gas space between two electrodes, thus initiating and maintaining the plasma. This is a common phenomena and is used in electric furnaces, arc welding, and carbon-arc searchlights. A serious drawback of this method of generation is the fact that the plasma is encapsulated between the electrodes and cannot be used independently of them.

Another method of generating a plasma is the dc plasma torch. A number of designs have been developed, and these fall into two general categories: gas stabilized and liquid stabilized. Perhaps the most common design is the gas sheath stabilized plasma jet, which is shown in Fig. 2.[17] The arc path is between the solid tungsten cathode to a hollow water cooled anode. Since the gas must pass through the arc, it will be heated to arc temperatures before leaving the torch. This torch has the advantage of having the plasma outside of the electrodes. These torches have been used for welding, cutting, spraying, chemical reactions, and numerous other applications.

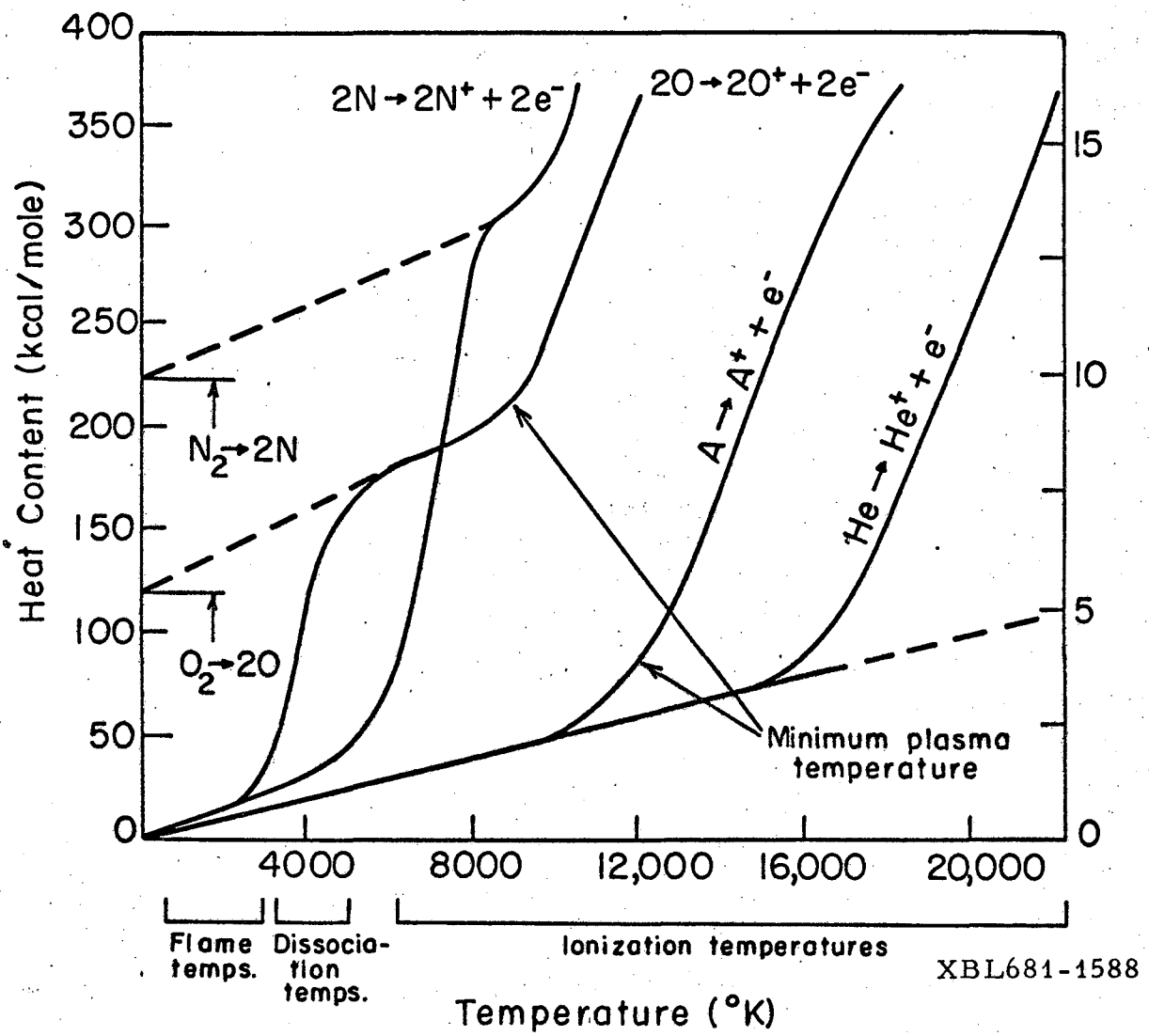

Fig. 1. ENERGY CONTENT OF GASES FROM 0-20,000°K.

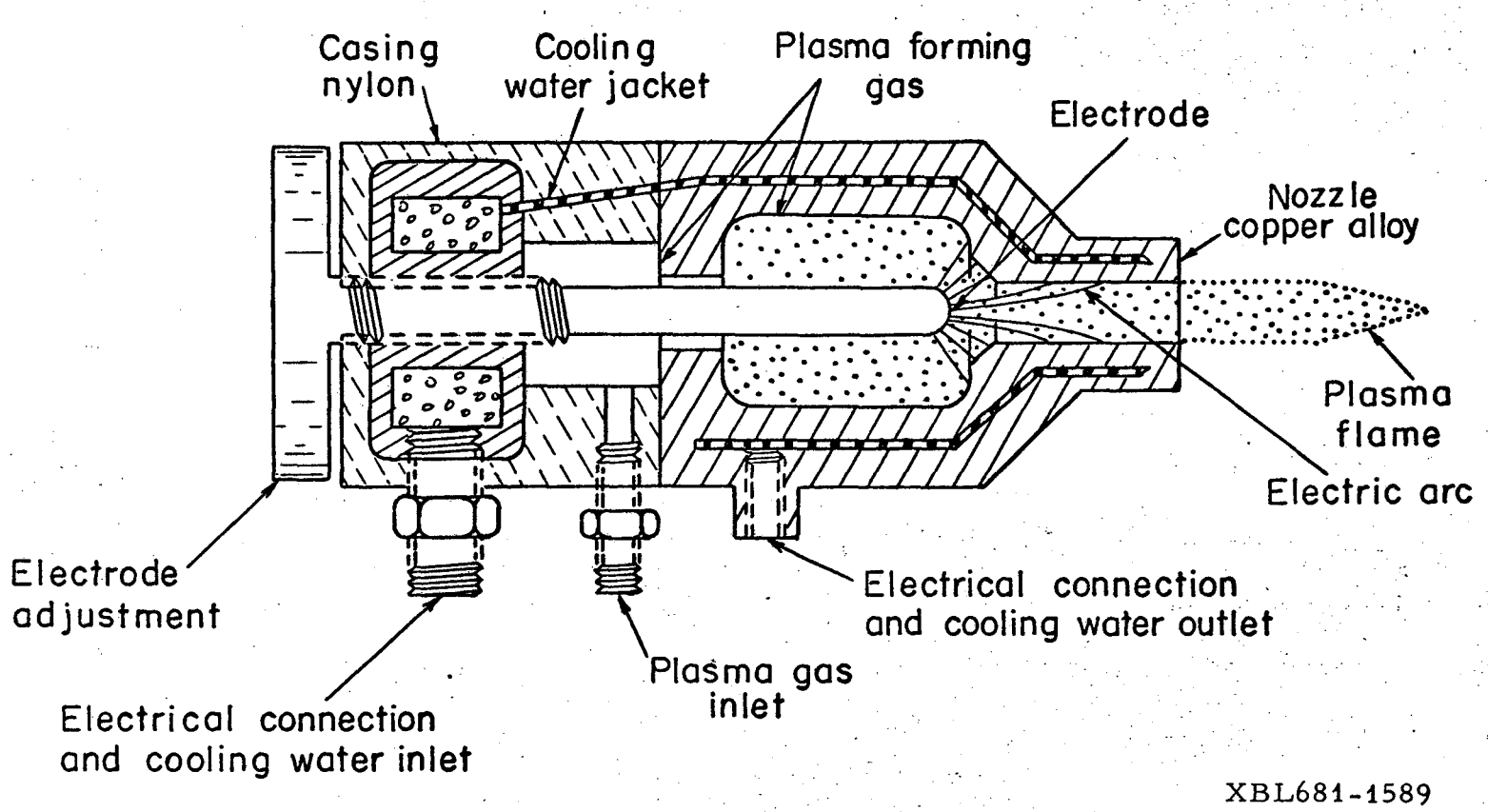

Fig. 2. GAS SHEATH STABILIZED PLASMA-FLAME TORCH.

Another gas stabilized dc plasma torch is the vortex stabilized model, wherein gas is swirled into the chamber between the electrodes to produce an intense vortex within the hollow electrode. In this way, the arc is forced to travel out of the nozzle and strike back to the front face of the hollow electrode. Two other designs of gas stabilized plasma torches are the wall stabilized plasma jet and the magnetically stabilized plasma jet. These are described by Thorpe.[17]

In water-stabilized plasma torches, both electrodes are consumable, and the solid electrode is fed into the torch to keep the arc length constant. This consumption of electrodes causes the plasma produced to be highly contaminated. For this reason, this unit is receiving little attention at the present time.

All of the previously mentioned dc plasma torches have serious disadvantages for plasma generation, most of which are associated with the electrodes inherent in their design. Since the electrodes are used at a very high temperature, certain gases which would cause their destruction by chemical reaction cannot be used. Only gases which provide reducing and neutral atmospheres can be used. Also, since the electrodes must be water cooled, they are therefore at a much lower temperature than the plasma and will tend to cool the plasma flame.

Probably the most serious problem encountered with the dc plasma jet, for any studies with solids, at least, is the injection of the solid particles into the plasma. The solid particles cannot be in the plasma gas stream as it goes through the electrodes, as the particles would naturally build up on the forward electrode and would soon plug the hole through which the plasma flame must pass. Therefore, the powder must be

fed into the flame radially downstream from the electrodes. This has two drawbacks: the powder is not in the plasma at its hottest point; and the residence time in the plasma is short.

The history of electrodeless discharges at near atmospheric pressures goes back to the work of Babat[18] who studied the characteristics of capacitively and inductively coupled discharges. Reed[19] developed a practical radio-frequency, induction coupled plasma jet in 1960. Since that time, there have been a number of publications on the subject, notably those of Reed,[20,21] Reboux,[22] Mironer and Hushfar,[23] Marynowski and Monroe,[24] and Kana'an and Margrave.[25].

In concept, the induction plasma torch is extremely simple (Fig. 3). Its essential components include a refractory non-conducting confining tube supplied with the working gas at one end and exhausting to the atmosphere at the other, a radiofrequency power supply for coupling energy to the plasma by means of a coil of a few turns surrounding the plasma confining tube, and a means for initiating ionization in the working gas during startup.[24] The plasma flame itself, shown in Fig. 4, takes the shape of an ellipsoid in the center of the coil.

A more detailed description of the plasma jet used in this work is given in the section entitled "Equipment."

D. Spheroidization

The method used for spheroidizing particles with an R-F plasma jet is as follows. It has been shown by Reed[19] that the temperature that exists in the center of the plasma flame is much higher than the melting point of any known material. Thus if the particles can be forced to travel through the core of the plasma, and if the energy transfer from

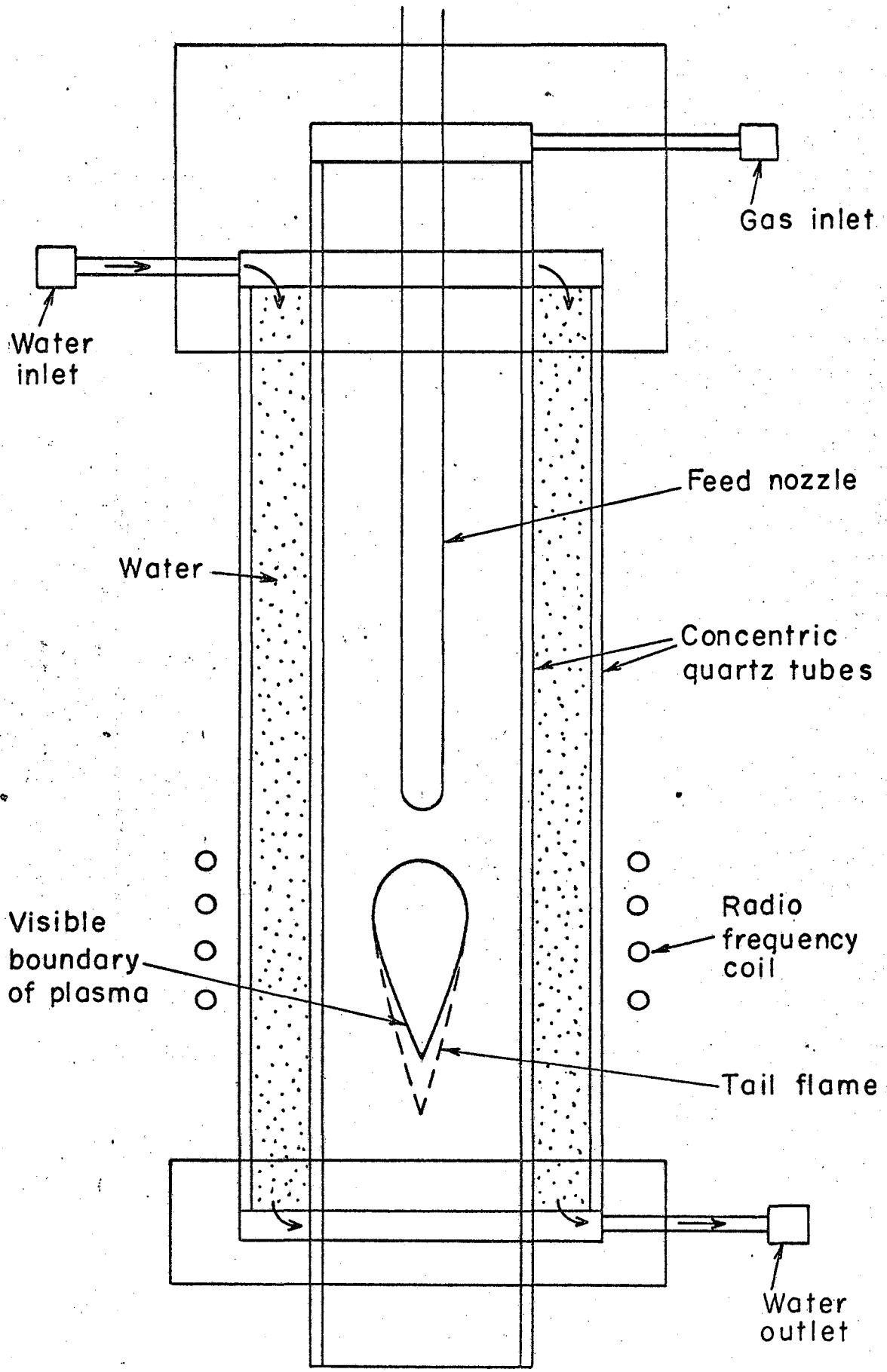

XBL681-1590

Fig. 3. R-F PLASMA TORCH

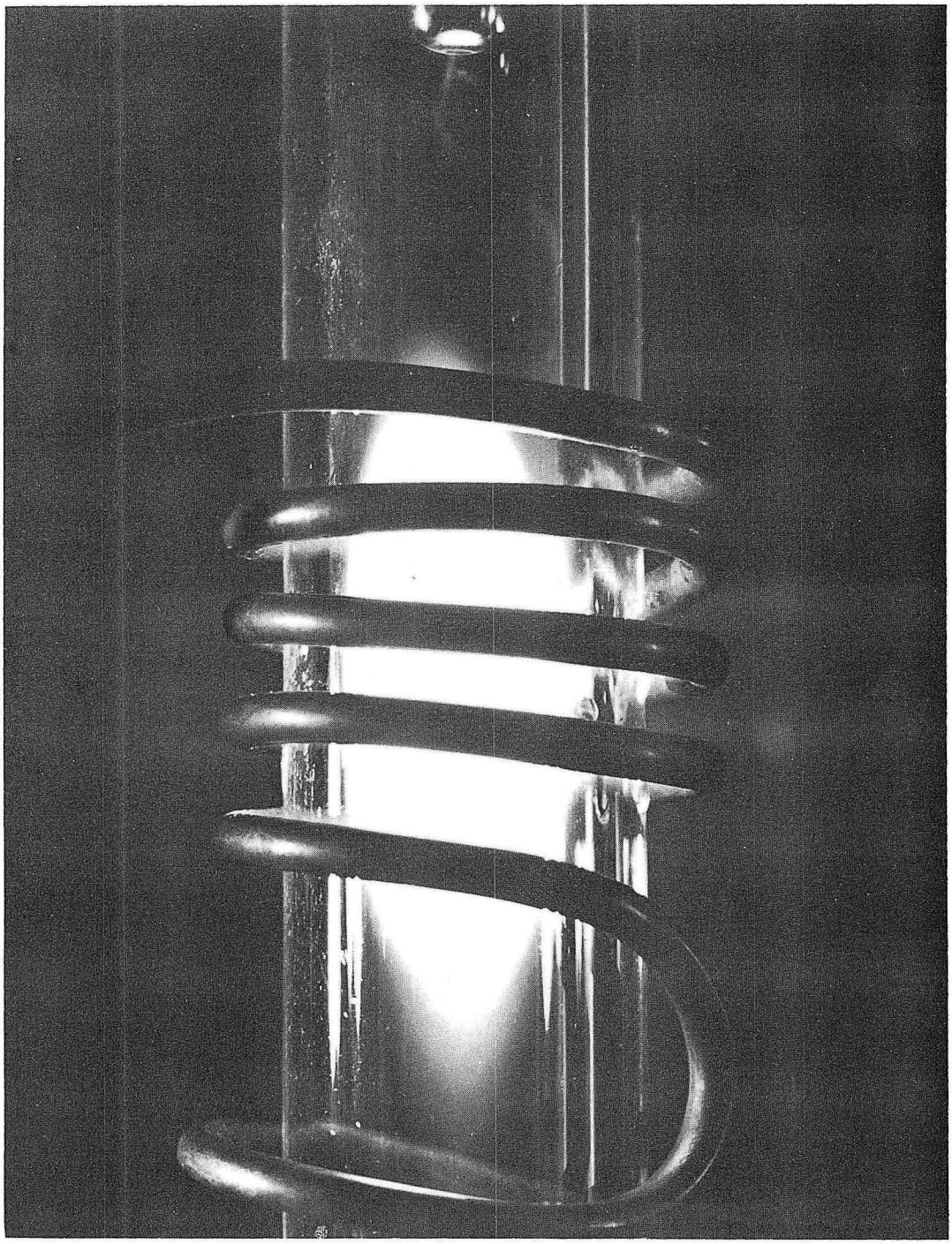

XBB 6712-6670

Fig. 4 Close-up of plasma flame

the plasma is sufficient, then the particles will melt. If the residence time in the plasma is too long, vaporization will occur. The liquid droplets take the shape of spheres due to surface tension forces. As these droplets pass from the plasma and are quenched, they retain their spheroidal shape, and hence, spherical particles are obtained.

Hedger and Hall[26] have reported yields of 50-70% spheroidization of several metal and ceramic powders using this method. Their studies were confined to 100-150μ particles.

It would be advantageous to be able to spheroidize both larger and smaller particles. In order to obtain very small spherical particles, they must not be allowed to become hot enough that substantial vaporization occurs. This can be accomplished in two ways: the particles can be forced through the core of the plasma at a higher velocity in order to decrease the residence time; or, controlled placing can be used to pass the particles through a cooler region of the plasma.

In order to make use of either of these methods, an injection nozzle must be made that will give a thin, well-defined flow pattern of particles. In other words, it must be designed to give laminar flow, even at high velocities. This laminar flow requirement will eliminate the spraying effect that occurs at an orifice when there is turbulence in the flow-stream.

The spheroidization of large particles will require the use of either higher power levels, or the introduction of a light, diatomic gas, such as H_2, which will give increased momentum energy transfer. Das[2] has shown that for a small particle of an optically transparent material in the temperature range of interest, radiative heat transfer plays a

very minor role and hence can be neglected.

II. EQUIPMENT

A. Description

The plasma generator used in this work was a Forrest Electronics 10-kW Induction Coupled Plasma Jet. A photograph of the overall equipment set-up is presented in Fig. 5, and a close-up of the torch head assembly is shown in Fig. 6. An induction coil surrounds two concentric quartz tubes as shown in Fig. 3. The plasma gas is fed into the top of the smaller one and is vented to the atmosphere at the bottom of the tube.

The original design called for the use of a gas (argon) as a cooling medium between the quartz tubes. It soon became evident that when the plasma jet was operated at power levels required for spheroidization, the gas cooling was far from satisfactory. When operating at powers of 5-7 kW, the inner quartz-tube would generally melt within a minute or two after start-up.

A water cooling system was then designed which could be held in place on the two quartz tubes by means of O-ring fittings. It can be seen in Fig. 6. With water flowing between the two tubes, no tube failures due to melting were encountered even at the highest power levels attainable with this unit.

The high frequency power is furnished through a cylindrical coil, which can also be seen in Fig. 6. The coil is made of 3/16 inch copper tubing and is water cooled. The plasma is located approximately in the center of the coil, and behaves like a one-turn shorted secondary of a transformer with n times the current flow of the n turn primary. Three

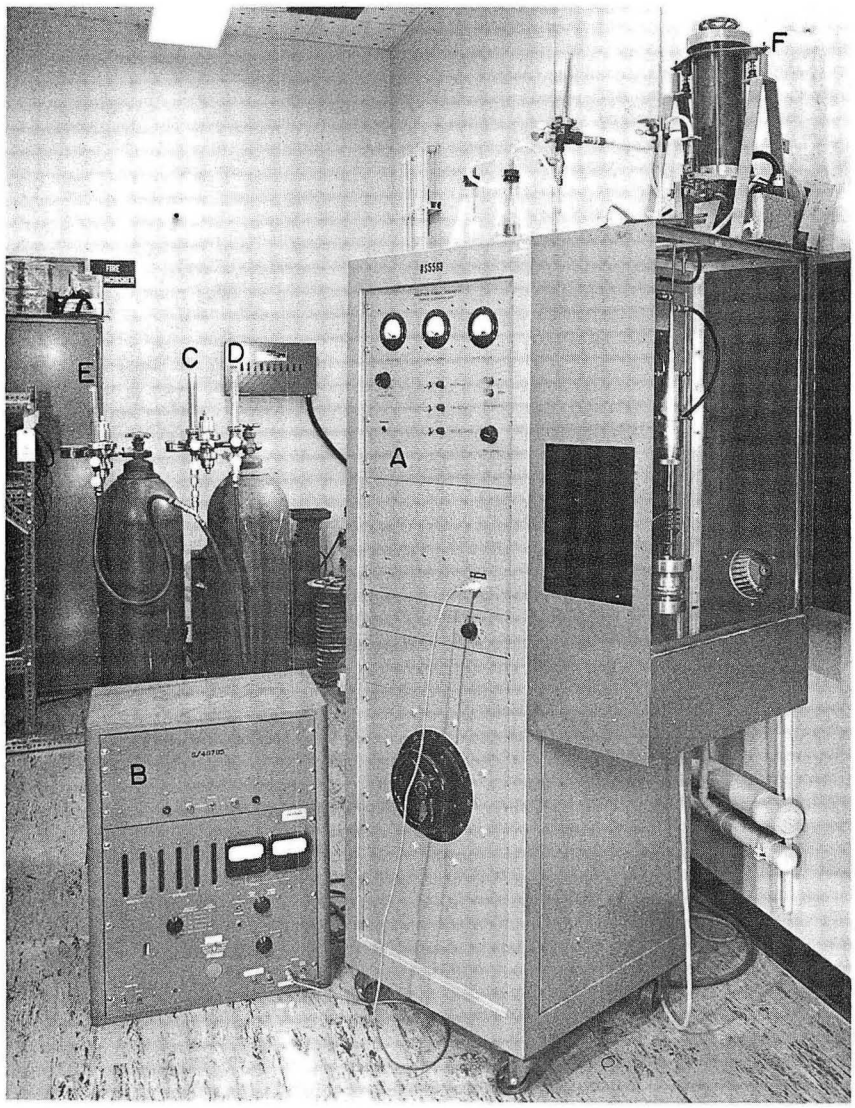

XBB 6711-6419 A

Fig. 5 R-F Plasma Generator

(a) Control panel, (b) Frequency counter, (c) Argon plasma gas supply, (d) Argon carrier gas supply, (e) Oxygen supply, (f) Powder feed system

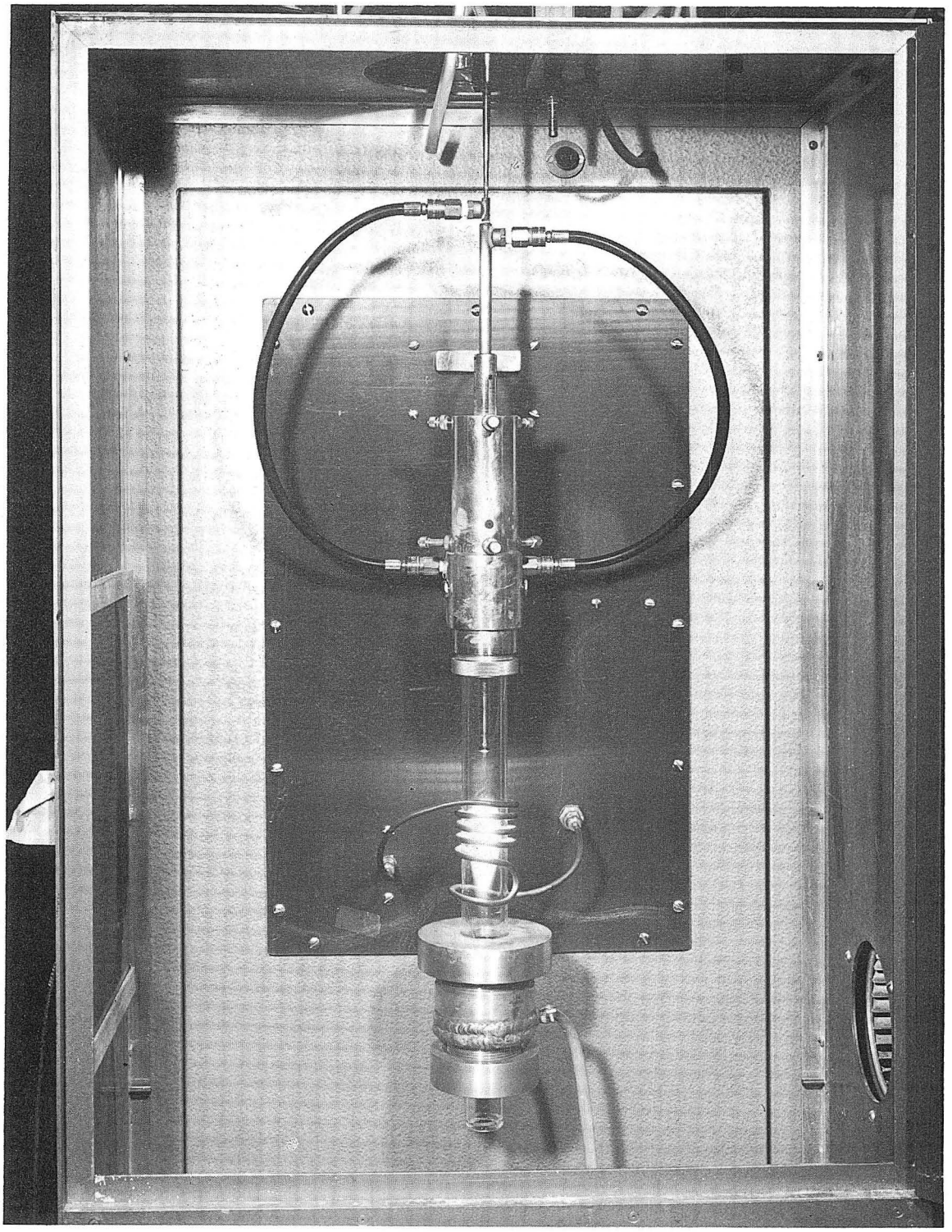

XBB 6711-6418

Fig. 6 Torch head assembly

coils were used in this work, one each of 3-turns, 4-turns, and 5-turns, each having one reverse turn on the lower end. The reverse turn had the effect of repelling some of the tailflame back into the plasma, resulting in a more concentrated flame. Most of the work was done with the 4-turn coil.

This plasma generator has the capability of varying the oscillator frequency by means of a variable vacuum capacitor in the plate tank circuit. Plasmas were generated at all frequencies from 2-8 MHz; however, most of the work was done at a frequency of 4 MHz. In plasma generating units with limited power capability, the in-operation frequency variability is necessary to permit smooth transitions from one plasma gas composition to another.

The powder feeder which is used to deliver the powder to the nozzle was a commercially available feeder which consists of a cylindrical chamber (approximately 15 centimeters in diameter) under a constant positive pressure of argon gas. At the bottom of the chamber is an auger which feeds the powder through a length of Tygon tubing into a cyclone chamber. The purpose of the cyclone chamber is to break up any agglomerates which may be present in the powder. The powder then goes through another length of tubing into the top of the nozzle. This apparatus can be seen in Fig. 5.

There are 3 variables which can be changed to effect the rate at which the powder is fed to the plasma. First, the velocity of the auger in the bottom of the powder chamber can be changed at will, thus varying the actual mass of powder being fed. Secondly, the powder feeder is connected to a vibrator with variable amplitude. The vibration of the

feeding apparatus prevents the powder from clogging at any point in its path and keeps it flowing freely. The third variable is the powder feed gas flow rate. Gas flow rates of 5-10 cfh were used in this work. The gas flow rate, of course, effects the velocity at which the particles come out of the nozzle. Under average conditions with a 0.090 inch inside diameter nozzle and a gas flow rate of 10 cfh, a gas velocity of 62.4 ft/sec is obtained. Mass feed rates of approximately 1. gm/min were used for this work.

In order to be able to use the large powder chamber with small amounts of powder, three pieces of solid lucite were machined to provide inclined planes on three sides of the chamber. These planes fed the powder to a small opening above the auger at the point where it leaves the chamber. This reduced the size of the sample necessary to give a steady flow of powder.

Several methods have been used to initiate a plasma in an R-F plasma generator. These have been described by Reed[19] and Marynowski.[24] In their early experiments, a small pilot plasma was formed using a conventional 30 amp, 60-cycle ac arc. The rf coil readily coupled to the pilot plasma thus formed, immediately enlarging it into the main plasma. Another method which has been used is the heating of a graphite rod in the rf field. This in turn heats the gases in the vicinity of the hot rod and lowers the breakdown potential of them sufficiently for the plasma to be established in the high rf field. For this work, a Tesla coil, connected to the feed nozzle, provides a localized high voltage spark, which in turn forms a pilot plasma and is then coupled immediately by the rf field.

All of the starting methods described require the ionization of the plasma gas. Since it takes less energy to reach ionizing temperatures in argon than any other common gas (Fig. 1), it is found that the plasma starts much more easily in argon than any other gas. Once the plasma is started, the composition of the plasma gas can be changed, if enough power is available for ionization.

Once the plasma has been started, it is held in place by the oscillating magnetic field produced by the rf coil. However, hydrodynamic instability (displacement and extinguishment of the plasma) is a serious problem. Sheath injection of the plasma gas is used in this equipment. This provides fairly effective stabilization through formation of reverse eddies that recirculate a portion of the hot plasma. The reverse turn in the bottom of the coil also provides added stabilization, especially during the feeding of powder into the plasma. It helps to overcome the tendency of the powder-argon mixture to "push" the plasma downward.

B. Operation

The physical operation of starting the plasma generator used for this work can be described as follows. First, the water is turned on to both the plasma generator itself and also to the quartz tubes. The main power and high voltage switches are turned on next. The high voltage should be on for several minutes before plasma initiation is attempted. This allows the vacuum power tubes to warm up.

Next, the plasma gas (argon) is turned on with an initial flow rate of 20 cfh. The nozzle is then lowered to a level even with the top of the coil. The plate voltages is raised to 4 kV and the grid current is adjusted to 200 mA. At this point, the plasma start button is pressed,

which activates the Tesla coil. The resulting high voltage spark should ignite the plasma immediately. The next three procedures should be done quickly in this order: the nozzle should be raised away from the flame; the argon flow rate should be lowered to 10 cfh; and the grid current: plate current ratio should be adjusted to 1:10.

Now, other gases may be slowly mixed with the argon, but the current ratio will have to be readjusted after each composition change. Also, the frequency may have to be changed in order to maintain a stable plasma.

For the injection of powders, the nozzle is lowered to a point about 1-1/2" away from the flame. The flow of powder feed gas (always 100% argon) is then started very slowly, while maintaining a constant current ratio. If the plasma becomes unstable, the flow of the plasma gas has to be reduced to about 5 cfh. When the powder-feed gas is flowing at the desired rate (5-10 cfh), the nozzle should be lowered to the point where the powder gas flow begins to displace the plasma flame down the quartz tube (approximately 1/2" away). The powder chamber auger and vibrator are then turned on which begins the powder flowing through the flame. At times, the plasma would become very unstable when powder was flowing through it; if it extinguished, it would oftentimes reignite itself upon the halting of the powder flow.

III. NOZZLE DESIGN

As was mentioned earlier, a prerequisite for getting efficient spheroidization is being able to accurately place powders into the plasma flame. The injection nozzle which was supplied with the plasma generator is shown in Fig. 7. It is evident that a fairly high powder velocity is needed to drive the powder through the center of the flame. This was

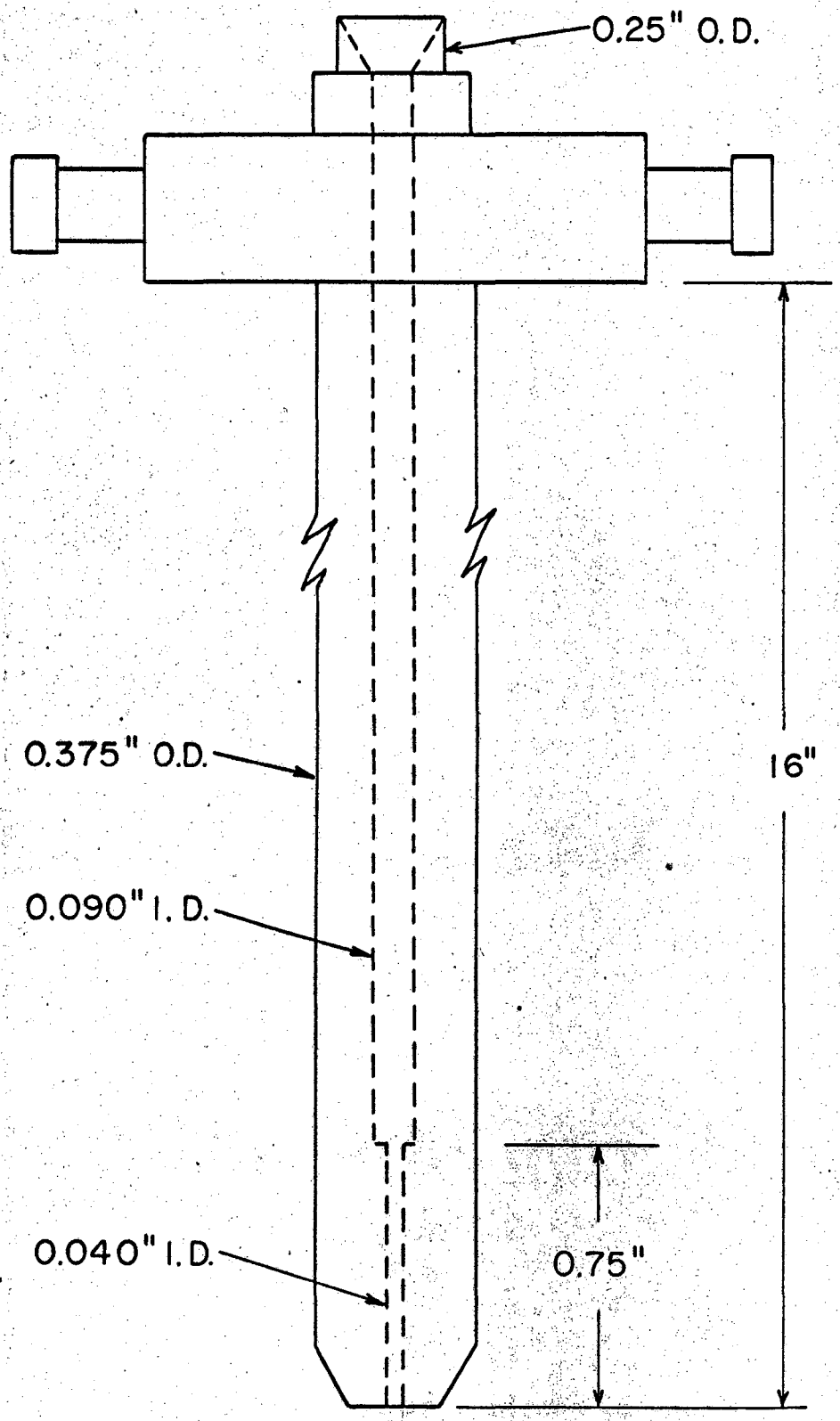

XBL681-1591

Fig. 7. FACTORY SUPPLIED NOZZLE.

accomplished by the very small inside diameter at the end of the nozzle. However, the design of this nozzle is faulty in at least three ways. The sudden change of cross-sectional area at the top of the nozzle introduces a large amount of turbulence in the gas-powder mixture. This frequently caused the powders to clog at this point. The combined effect of the sudden cross-sectional change at the bottom of the nozzle and the very small diameter of the orifice not only produces turbulence which can cause clogging, but also causes the powders to spray at the orifice when the opening is not clogged. This effect is shown in Fig. 8, the left photograph having been taken with the gas-powder mixture flowing at 30 ft/sec, while the right one shows the same effect at 70 ft/sec.

The first injection nozzle designed for this work is shown in Fig. 9. Here, the sudden cross-sectional change at the bottom of the nozzle was eliminated and the inside diameter was increased to reduce the friction thereby lessening the possibility of turbulent flow. This nozzle gave no spraying of the powder, and laminar flow was observed even at very high flow rates. However, there were several problems inherent in this design. The abrupt cross-sectional change at the top of the nozzle still induced some clogging of the powders. Also, the inside diameter of the nozzle was too large, in that when a high gas flow rate was used to give a sufficiently high velocity to the particles, the mass of gas tended to extinguish the plasma. Lastly, the stainless steel wires which were used to force the cooling water to the bottom of the nozzle did not fit snuggly enough to give adequate cooling at the tip. Consequently, this nozzle became very hot when it was lowered close to the flame.

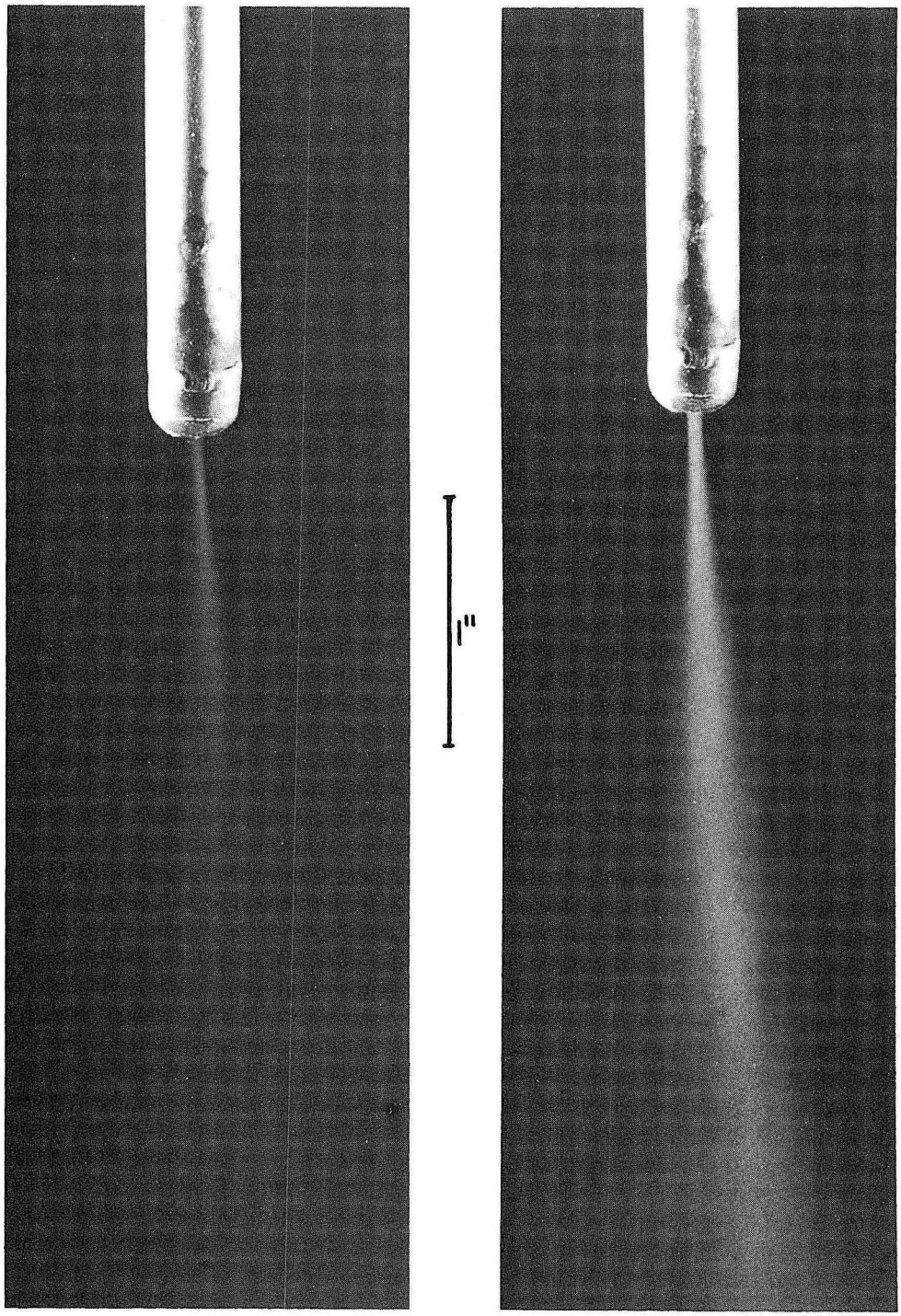

XBB 6712-6672 A

Fig. 8 Flow patterns of factory supplied nozzle

a. 30 ft/sec b. 70 ft/sec

Patterns made with CO_2-water vapor mixture

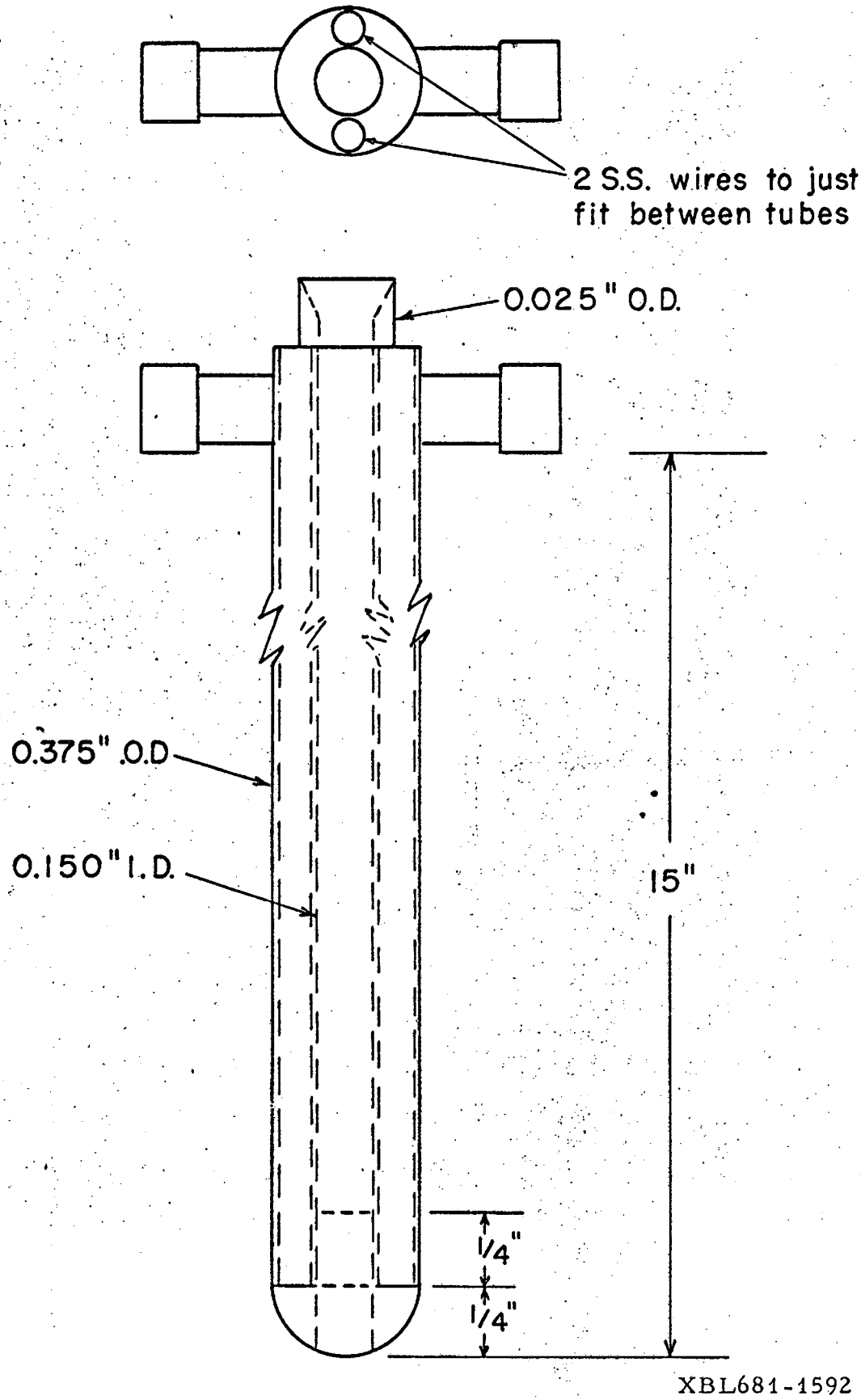

Fig. 9. SECOND NOZZLE DESIGN.

The next design is shown in Fig. 10. Here, all abrupt cross-section changes are eliminated and the inside diameter of the nozzle is reduced to a value intermediate of the first two nozzles. Also, on this and the final design, the bottom three inches of the nozzle were plated with rhodium. Rhodium was chosen because it has both a high melting point and a high reflectivity. This nozzle gave good results; however, the stainless steel sheet which replaced the wires of the previous design still did not cool the tip of the nozzle efficiently.

The final nozzle design is shown in Fig. 11. Here, three concentric tubes were used, where the water was forced down between the inner and middle tubes and up between the middle and outer tubes. This device cooled the tip of the nozzle very efficiently, even when the nozzle was quite close to the plasma flame. No clogging was noticed with this nozzle, and laminar flow was observed at all velocities used. The flow patterns observed are shown in Fig. 12. The pattern on the left represents a flow velocity of 30 ft/sec, and the right, 80 ft/sec. This shows the necessary laminar flow.

IV. EXPERIMENTAL RESULTS

SiO_2 was used during all the preliminary work with the r-f plasma generator to test its spheroidizing capability under various operating parameters and nozzle designs. There were several reasons for its use. First, it was, of course, readily available. Also, the fluidity of SiO_2 in its liquid state is less than that of Al_2O_3, the substance of primary interest in this study. Thus, if SiO_2 could be spheroidized with this apparatus, it would be likely that Al_2O_3 could be, also. Finally, the X-ray diffraction pattern of the product would give an immediately

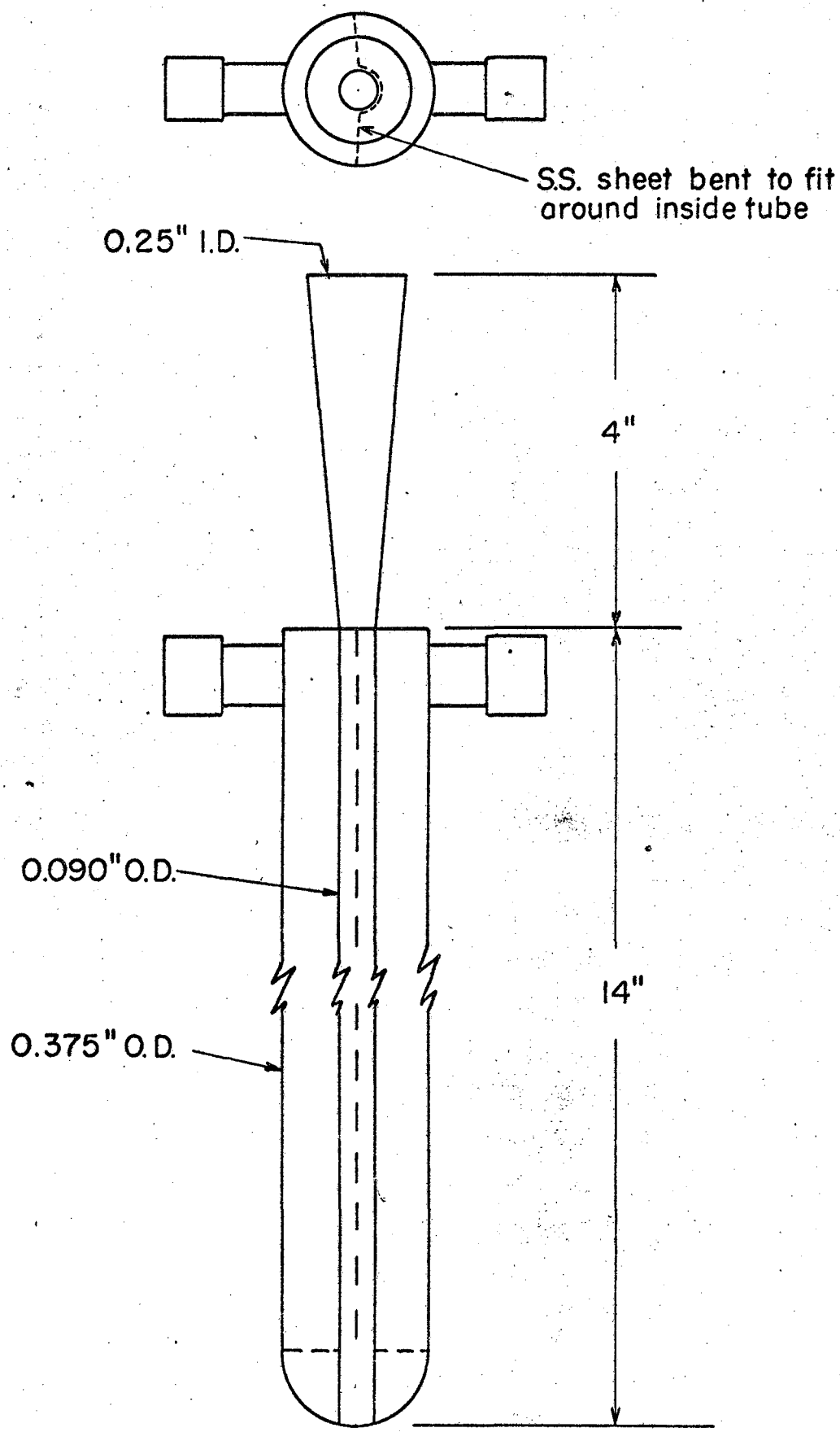

XBL681-1593

Fig. 10. THIRD NOZZLE DESIGN.

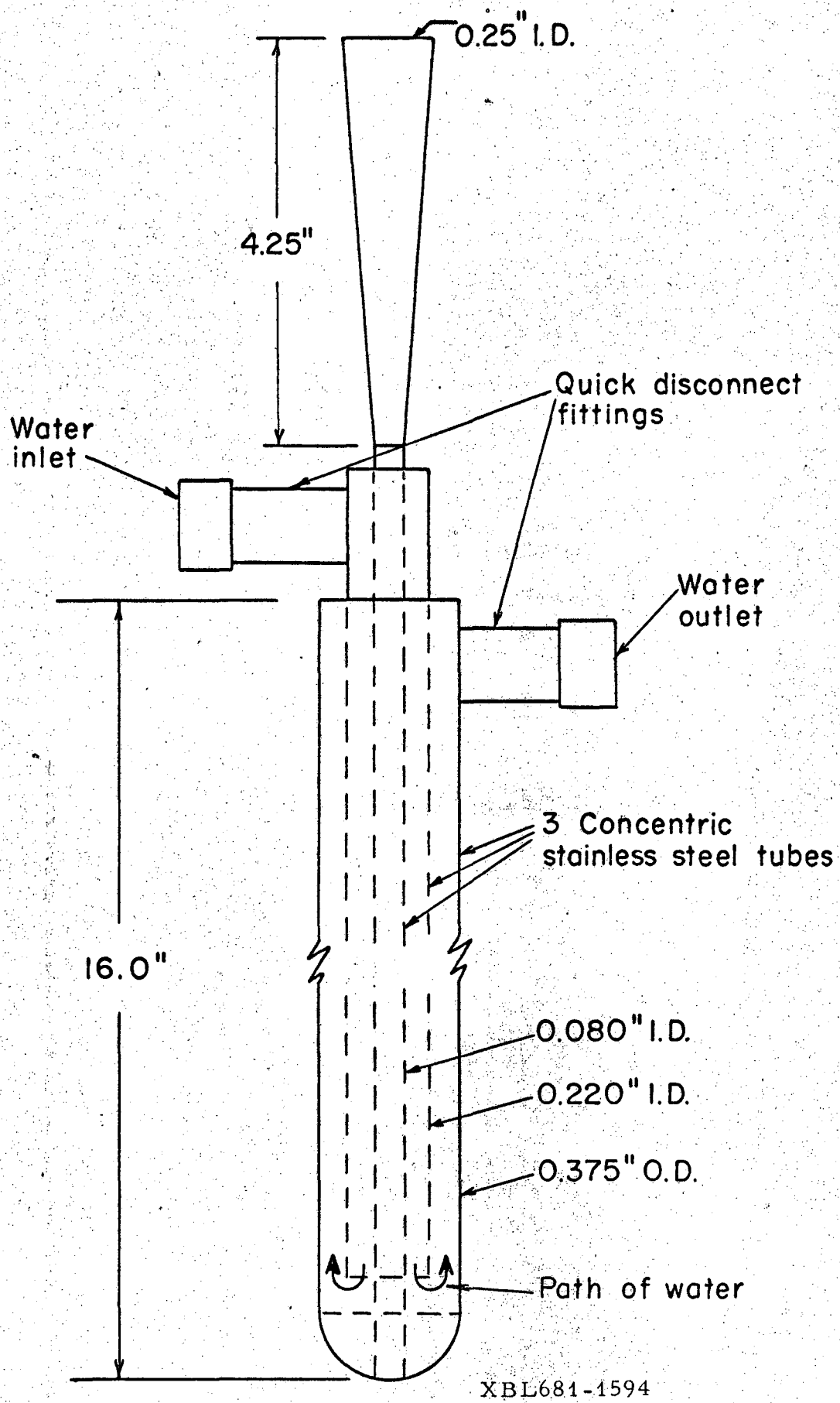

Fig. 11. FOURTH AND FINAL NOZZLE DESIGN.

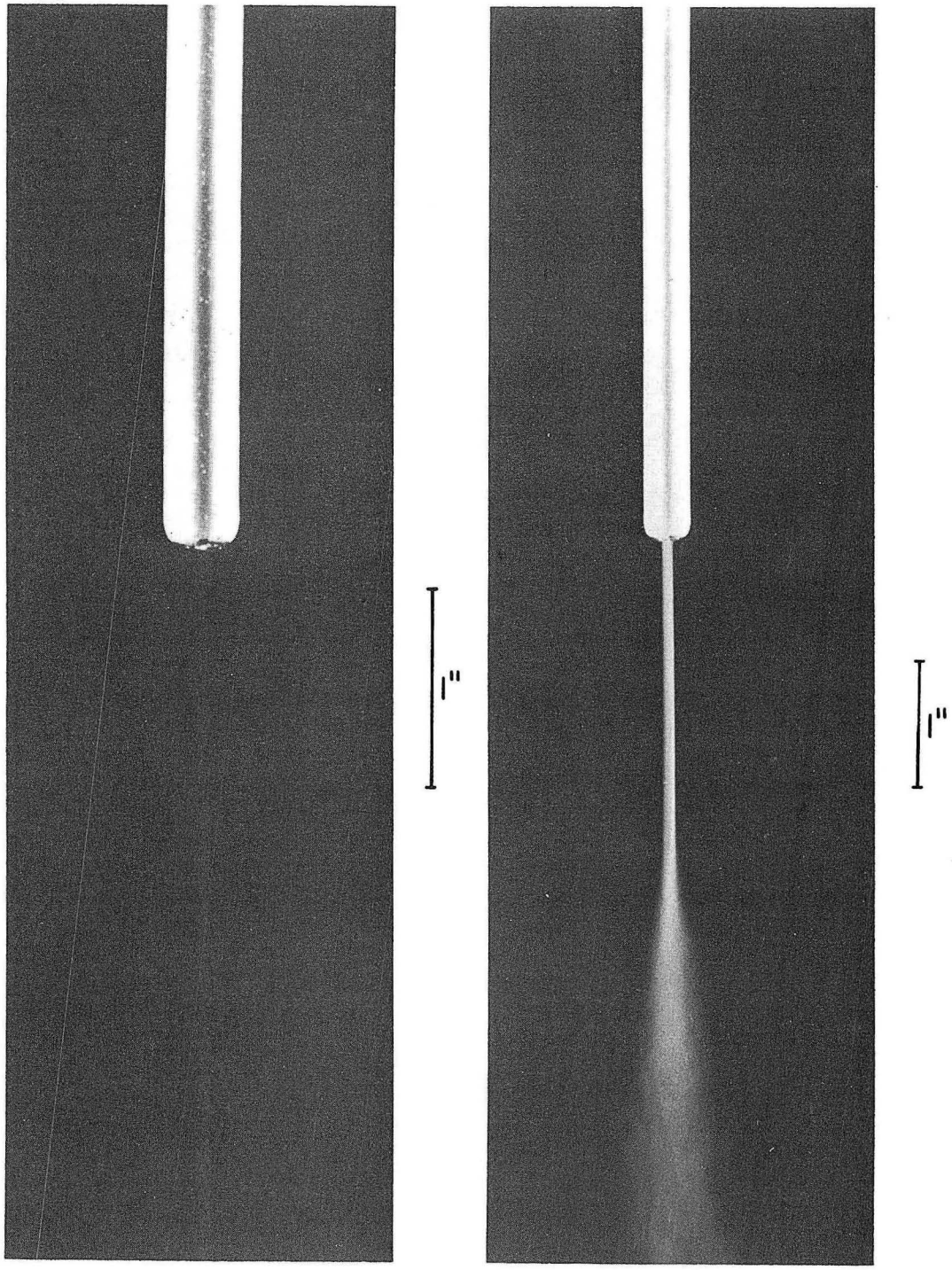

XBB 6712-6671 A

Fig. 12. Flow patterns of final nozzle

a. 30 ft/sec b. 80 ft/sec

apparent indication of the degree of melting due to the easily recognizable diffraction pattern of the crystalline quartz feed. It was assumed that all melted quartz would be quenched to a fused silica glass.

The initial attempts to spheroidize silica using the nozzle supplied with the plasma generator gave approximately 40% conversion to spherical particles. This was estimated by microscopic examination. This figure does not take into account the powder that was deposited on the walls of the quartz tube due to the spraying effect of the nozzle. On passing this powder through the jet a second time, the total percent of spheroidized particles was increased to approximately 75%.

All the SiO_2 powder upon which spheroidization was attempted was ground and separated to -250 +325 mesh. The resulting spheres were all nearly 100% dense, with only a few small bubbles appearing. The fact that the spheres were completely amorphous was shown by collecting a sample of all spheres and taking an X-ray diffraction pattern of it. The resulting pattern showed no crystalline SiO_2 peaks at all. The collection of a sample of spheres alone was accomplished by placing a small amount of partially spheroidized material on the top of a glass inclined plane which is vibrating perpendicularly to particle flow in the plane of the glass plate. The spheres roll to the bottom while the irregularly shaped particles remained on the plate.

An attempt was made to correlate the operating frequency of the plasma generator with the efficiency of spheroidization. It was found that the frequency range of 4-6 MHz was best for spheroidization, due almost entirely to the fact that the plasma was the most stable in this range.

The final nozzle, which gave laminar flow of the powder, provided a much higher degree of spheroidization. On a single pass through the plasma, the SiO_2 was approximately 75% spheroidized. The increased conversion was due to the ability to be able to accurately place the powders in the center of plasma. A photograph of the SiO_2 after one pass through the plasma is given in Fig. 13. After two passes through the plasma, the conversion was increased to about 90%.

The amount of powder which was thrown against the quartz tube was considerably reduced when using the final nozzle, although this problem has not been entirely overcome. A small amount of the powder was even thrown onto the quartz tube above the plasma. These are particles that did not have a high enough velocity to overcome the turbulence of the plasma region.

Spheroidization of -325 +400 mesh NiO was attempted next. This compound gave very good results. Approximately 80-90% could be converted to spheres with one pass through the plasma. A photograph of one-pass NiO spheres is given in Fig. 14. X-ray analysis showed the spheres to be all NiO.

The source of the Al_2O_3 used in this work was crushed and sized single crystal sapphire. The conversion of -325 +400 mesh Al_2O_3 on one pass through the plasma was about 65%, two passes produced 80% spheres, and three passes produced 90% spheres. A picture of the spheres thus produced is given as Fig. 15. Figure 16 shows spheres produced from -400 mesh Al_2O_3.

An X-ray and visual analysis of the Al_2O_3 spheres was made as outlined by Das.[2] This showed that the alumina had been largely transformed

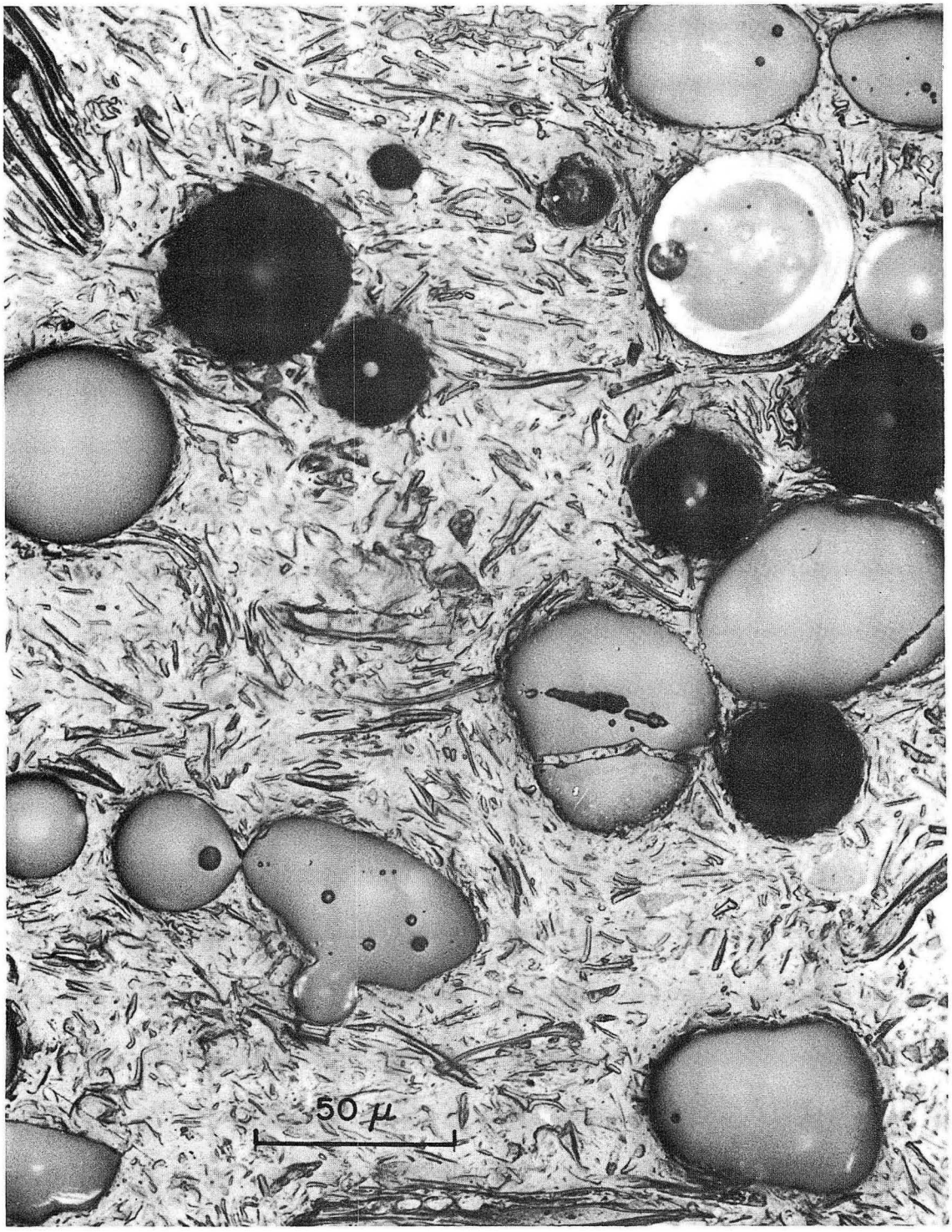

XBB 6712-6786 A

Fig. 13 -250 +325 mesh SiO_2 after one pass through plasma

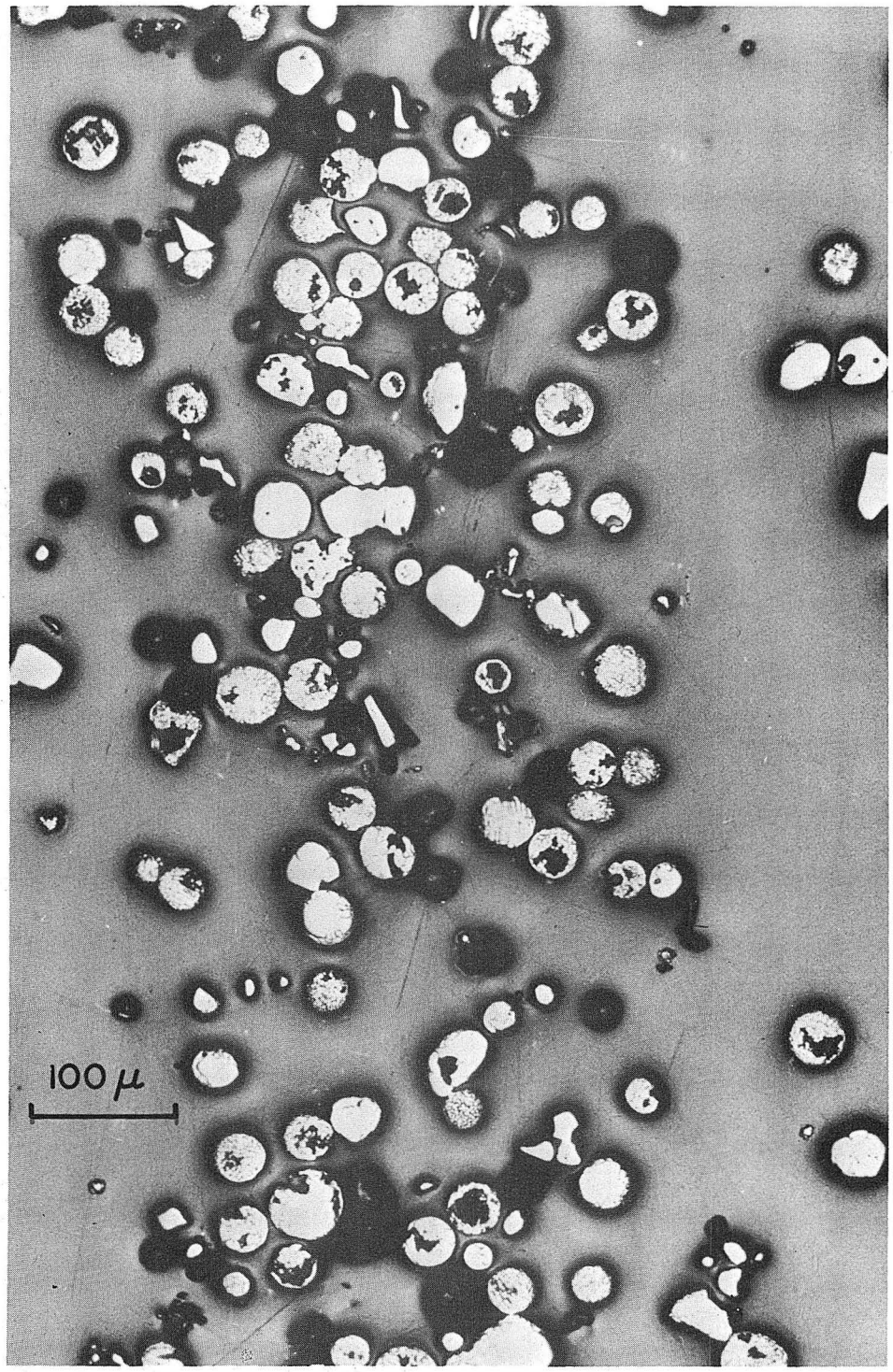

XBB 6712-6785 A

Fig. 14 -325 +400 mesh NiO after one pass through plasma

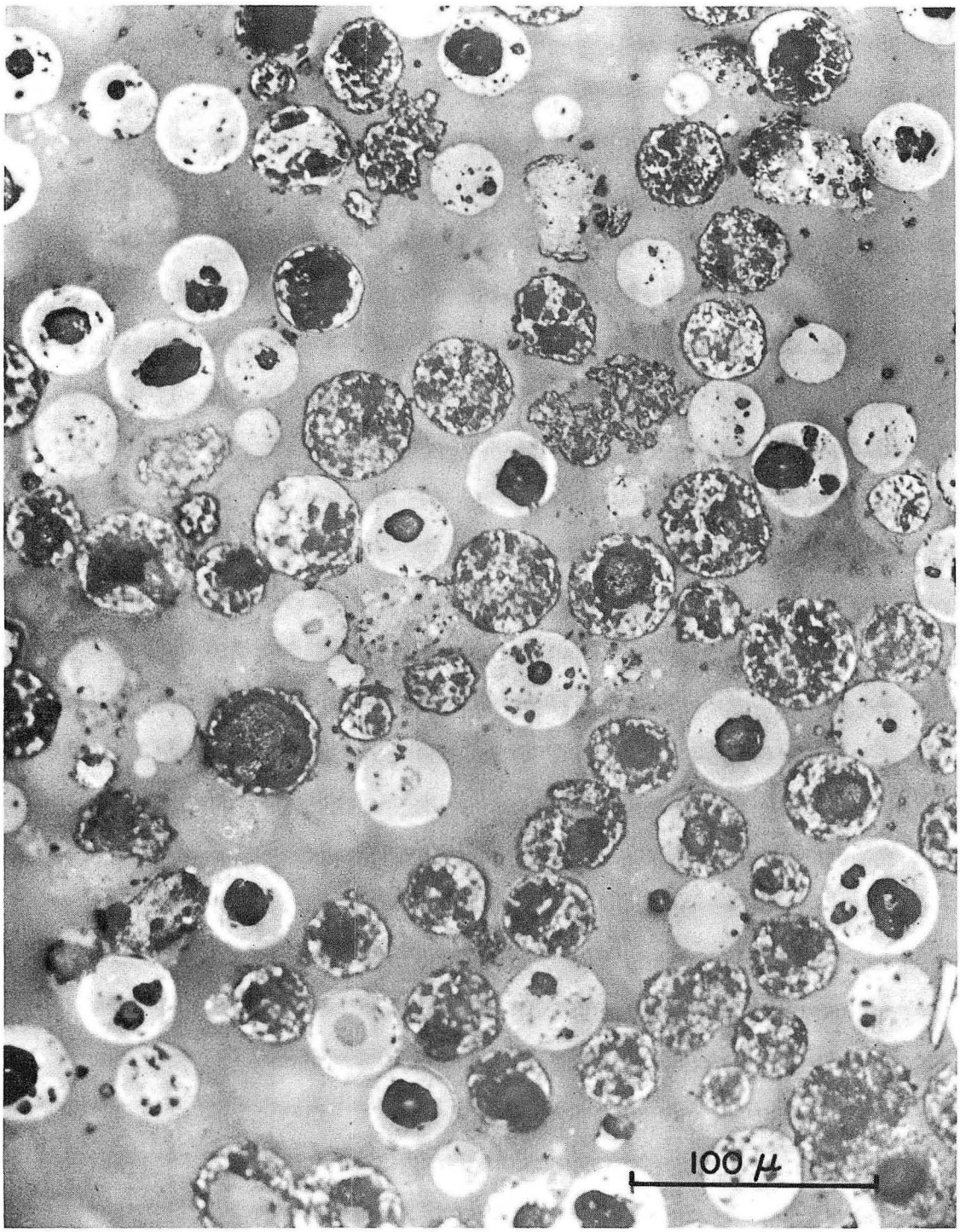

XBB 6712-6787 A

Fig. 15 -325 +400 mesh Al_2O_3 spheres after three passes through plasma

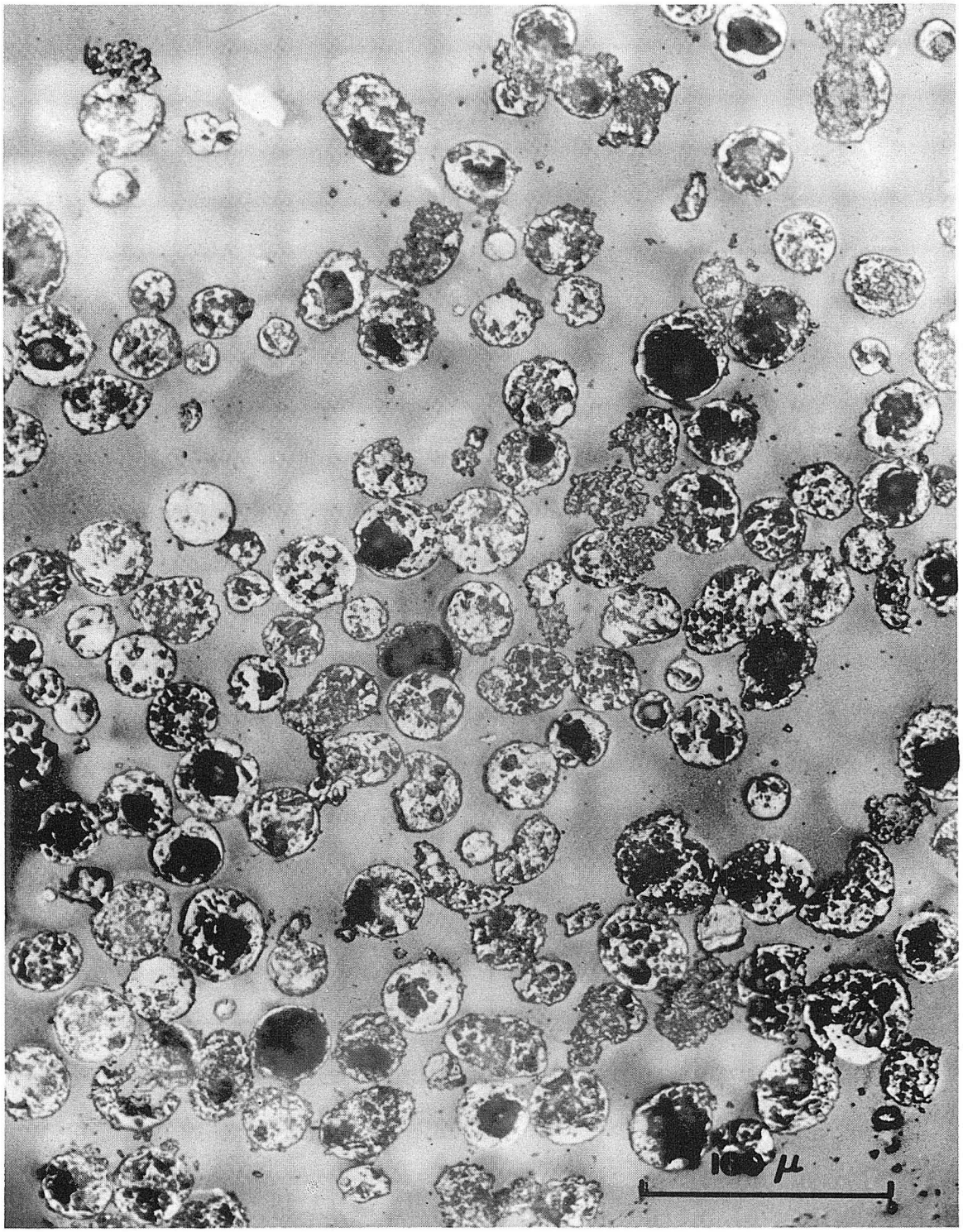

XBB 6712-6788 A

Fig. 16 -400 mesh Al_2O_3 spheres after three passes through plasma

to the metastable delta and gamma phases, although some (20-30%) stable alpha phase was still present.

About 50% of the Al_2O_3 spheres produced were nearly theoretically dense. The rest were either hollow shells or contained a large number of small bubbles similar to that observed by Das. This is easily observed in the photographs of the Al_2O_3. Although the spheres were mounted in glass, some pull-outs resulted from the polishing operation. The SiO_2 and NiO spheres were mounted in plastic.

A study was made to determine the effect of plasma gas composition on the spheroidization of Al_2O_3. This was accomplished by making a series of one-pass runs with different argon-oxygen ratios of the plasma gas. The results of this study are given in the following table.

Table I. Effect of Oxygen in Plasma Gas on Spheroidization

% Oxygen	% Al_2O_3 Spheroidized
0	65%
10	70%
20	75%

With oxygen contents above 20%, it was very hard to keep a stable plasma with this unit. The increased spheroidization with increased oxygen content is a result of the higher power levels required to ionize the oxygen and hence the increased heat content of the plasma.

Plasma gases that contained oxygen had no noticeable effect on the density or the phase of the Al_2O_3 spheres produced.

V. CONCLUSIONS

The r-f induction-coupled plasma generator has been found to be a practical tool for the spheroidization of 30-70 micron ceramic powders when certain design and operating parameters have been optimized. A method has been devised whereby the quartz plasma containment tube can be water cooled which allows the plasma to be operated at higher power levels.

A powder injection nozzle has been designed and built which gives a highly directed flow pattern of the powder, with no spraying effect at the tip of the nozzle. This allows the particles to be accurately placed in the center of the plasma where the temperature is the highest.

A study was made of the effect of plasma gas composition on spheroidization. It was found that argon-oxygen plasma gas mixtures gave plasmas with higher heat content than argon alone, and could be used most easily in a plasma generator with a high power capability and wide frequency variability. This mixture would be especially useful in cases where an oxidizing atmosphere is required.

Finally, SiO_2, NiO, and Al_2O_3 were spheroidized with varying degrees of success. The Al_2O_3 spheres produced had been largely transformed to the metastable delta and gamma phases, although some alpha was still present. About 50% of the alumina spheres were quite porous, even to the point of being hollow shells.

ACKNOWLEDGMENTS

The writer is greatly indebted to Professor R. M. Fulrath under whose guidance the present investigation was conducted. Acknowledgment is extended to George Dahl and Don Wixson for the preparation of microstructures and to E. R. Edwards for experimental assistance. Valuable discussions with Professor R. J. Ayen are also acknowledged.

This work was done under the auspices of the U. S. Atomic Energy Commission.

REFERENCES

1. R. L. Coble, "Initial Sintering of Alumina and Hematite," J. Am. Ceram. Soc., 41, 51 (1958).

2. A. R. Das and R. M. Fulrath, "Liquid-Solid Transformation Kinetics in Al_2O_3," Reactivity of Solids, Elsevier, Amsterdam, 31 (1965).

3. P. W. Clark and J. White, "Some Aspects of Sintering," Trans. Brit. Ceram. Soc. 49, 305 (1950).

4. G. C. Kuczynski, "Self Diffusion in Sintering Metal Powders," Trans. AIME, 195, 169 (1949).

5. W. D. Kingery and M. Berg, "Study of the Initial Stages of Sintering of Solids by Viscous Flow, Evaporation, Condensation and Self-Diffusion," J. Appl. Phys., 26, 1206 (1955).

6. B. Ya Pines, "Mechanism of Sintering," J. Tech. Phys. (U.S.S.R.), 16, 737 (1946).

7. "Fueled Microspheres" Minnesota Mining & Manufacturing Co. Bulletin #J-FBG2 (113.15) BPH.

8. J. N. Goodier, "Concentration of Stress Around Spherical Inclusions & Flaws," J. Appl. Mech. 1 [1] 39-44 (1933).

9. R. H. Edwards, "Stress Concentrations Around Spheroidal Inclusions & Cavities," Trans. AIME, 73 [1] 19-30 (1951).

10. D. P. H. Hasselman and R. M. Fulrath, "Micro-mechanical Stress Concentrations in Two Phase Brittle Matrix Ceramic Composites," J. Am. Ceram. Soc. 50, 8, 399 (1967).

11. D. P. H. Hasselman and R. M. Fulrath, "Calculated and Observed Effect of Spherical Tungsten Dispersions on Young's Modulus of a Glass," J. Am. Ceram. Soc. 48, 10 (1965).

12. L. A. Jacobson, "Strength of a Two Phase Model System," (M.S. Thesis) University of California, Berkeley, 1961.

13. R. F. Bertolotti, "The Effect of Stress Concentration on Strength of a Model Two Phase System," J. Am. Ceram. Soc., 50, 12. (1967).

14. D. O. Nason, "Effect of Interfacial Bonding on Strength of a Model Two Phase System, (M.S. Thesis) University of California, Berkeley, UCRL-11011, 1963.

15. Anonymous, "Plasma-Fourth State of Matter" Industrial and Engineering Chemistry, 55, 16 (1963).

16. Thomas B. Reed, "Plasma Torches," International Science & Technology, 4, 6 (1962).

17. Merle L. Thorpe, "The Plasma Jet and Its Uses," Research/Development, 11, 1 (1960).

18. G. I. Babat, "Electrodeless Discharges and Some Allied Problems," J. Inst. Elec. Enges. (London) 94, Part III, 27 (1947).

19. Thomas B. Reed, "Induction Coupled Plasma Torch," J. Appl. Phys. 32, 821 (1961).

20. T. B. Reed, "Growth of Refractory Crystals Using the Induction Plasma Torch," J. Appl. Phys. 32, 2534 (1961).

21. T. B. Reed, "Plasma Torches," Intern. Sci. Technol. 6, 42 (1962).

22. J. Reboux, "Chalumeau a plasma haute frequence et hautes temperatures," Procede S.T.E.L.-C.N.R.S. (Vitry) (1962).

23. A. Mironer and F. Hushfar, R-F Heating of a Dense Moving Plasma, AIAA Electric Propulsion Conference, Colorado Springs, March 1963.

24. C. W. Marynowski and A. G. Monroe, R-F Generation of Thermal Plasmas, High Temp. Tech., Stanford Research Inst., Asilomar, 1963.

25. Adli S. Kana'an and John L. Margrave, Chemical Reactions in Electric Discharges, Adv. in Inorg. Chem. & Radiochem., 6, 143-206 (1964).

26. H. J. Hedger and A. R. Hall, "Preliminary Observations on the Use of the Induction Coupled Plasma Torch for the Preparation of Spherical Powder," Powder Met. 1961, 8, 65-71.

This report was prepared as an account of Government sponsored work. Neither the United States, nor the Commission, nor any person acting on behalf of the Commission:

A. Makes any warranty or representation, expressed or implied, with respect to the accuracy, completeness, or usefulness of the information contained in this report, or that the use of any information, apparatus, method, or process disclosed in this report may not infringe privately owned rights; or

B. Assumes any liabilities with respect to the use of, or for damages resulting from the use of any information, apparatus, method, or process disclosed in this report.

As used in the above, "person acting on behalf of the Commission" includes any employee or contractor of the Commission, or employee of such contractor, to the extent that such employee or contractor of the Commission, or employee of such contractor prepares, disseminates, or provides access to, any information pursuant to his employment or contract with the Commission, or his employment with such contractor.