UCRL-17957
cy 2

University of California

Ernest O. Lawrence Radiation Laboratory

ROTATING DISK SYSTEM FOR THE STUDY OF
METAL DEPOSITION FROM NONAQUEOUS SOLVENTS

Friedrich G. K. Baucke, Dieter Landolt and Charles W. Tobias

December 1967

TWO-WEEK LOAN COPY

This is a Library Circulating Copy which may be borrowed for two weeks. For a personal retention copy, call Tech. Info. Division, Ext. 5545

UCRL-17957 c2

DISCLAIMER

This document was prepared as an account of work sponsored by the United States Government. While this document is believed to contain correct information, neither the United States Government nor any agency thereof, nor the Regents of the University of California, nor any of their employees, makes any warranty, express or implied, or assumes any legal responsibility for the accuracy, completeness, or usefulness of any information, apparatus, product, or process disclosed, or represents that its use would not infringe privately owned rights. Reference herein to any specific commercial product, process, or service by its trade name, trademark, manufacturer, or otherwise, does not necessarily constitute or imply its endorsement, recommendation, or favoring by the United States Government or any agency thereof, or the Regents of the University of California. The views and opinions of authors expressed herein do not necessarily state or reflect those of the United States Government or any agency thereof or the Regents of the University of California.

UCRL-17957
UC-4 Chemistry
TID-4500 (51st Ed.)

UNIVERSITY OF CALIFORNIA
Lawrence Radiation Laboratory
Berkeley, California

AEC Contract W.7405-eng-48

ROTATING DISK SYSTEM FOR THE STUDY OF METAL DEPOSITION FROM NONAQUEOUS SOLVENTS

Friedrich G. K. Baucke, Dieter Landolt and Charles W. Tobias

December 1967

Printed in the United States of America
Available from
Clearinghouse for Federal Scientific and Technical Information
National Bureau of Standards, U. S. Department of Commerce
Springfield, Virginia 22151
Price: Printed Copy $3.00; Microfiche $0.65

ROTATING DISK SYSTEM FOR THE STUDY OF METAL DEPOSITION FROM NONAQUEOUS SOLVENTS

Friedrich G. K. Baucke, Dieter Landolt, and Charles W. Tobias

Inorganic Materials Research Division, Lawrence Radiation Laboratory, and Department of Chemical Engineering, University of California, Berkeley, California

ABSTRACT

A rotating disk electrode system was designed to be used in metal deposition studies from nonaqueous solvents under inert atmosphere. The apparatus consists of a rigidly mounted drive unit and a detachable cell unit which allows filling of the cell in a dry box while electrochemical measurements are made outside the box. Purification procedures for propylene carbonate and experiments on the deposition of potassium and calcium from propylene carbonate solutions are reported.

INTRODUCTION

The use of nonaqueous solvents is of interest in electrochemical deposition of metals which cannot be deposited from aqueous solutions, such as alkali or alkaline earth metals or the group IVb Vb and VIb metals. Among organic solvents propylene carbonate (PC) originally proposed by Harris and Tobias[1] has recently found much attention, especially in connection with the use of lithium as anode material in high energy density batteries. The efficiency of a metal deposition process from PC solutions depends not only on the purity of the solvent[2] but also on the prevailing mass transfer conditions. Decomposition of the solvent sets in when the limiting current for metal deposition is exceeded, and the structure of the deposits changes when the limiting current is approached. A thorough literature review of the influence of mass transfer on the structure of metal deposits obtained from aqueous solutions has been given by Ibl[3].

Prior to a detailed study of the deposition process of various metals from PC it was considered necessary to establish defined experimental conditions with respect to solvent purity and hydrodynamics. A rotating disk system seemed best suited for the latter purpose.

A. The Rotating Disk System

Hydrodynamics and mass transfer characteristics of the rotating disk system are well understood[4,5]. The limiting current density which is constant over the electrode surface may be calculated for a metal deposition process in the presence of excess supporting electrolyte by using the relation

$$i_\ell = zFB_{(Sc)}D_+^{2/3}\nu^{-1/6}\omega^{1/2}C_+ \quad , \qquad (1)$$

where z = charge of cation, D_+ = cation diffusion coefficient (cm^2/sec), ν = kinematic viscosity (cm^2/sec), ω = angular velocity (rad/sec), C_+ = concentration of reacting cation (M/cm^3)*. $B_{(Sc)}$ is a constant depending on the ratio $Sc = \nu/D$ [5,6]. For aqueous solutions ($Sc > 1000$) its value is usually taken as 0.62 [4].

In the absence of excess supporting electrolyte migration has to be taken into account. For the case of a binary electrolyte [4,5,7] the limiting current density may be expressed as

$$i_\ell = \frac{zF}{t_-} B_{(Sc)} D_s^{2/3} \nu^{-1/6} \omega^{1/2} C_+ , \qquad (2)$$

where t_- is the transference number of the anion, and D_s the diffusion coefficient of the salt.

B. Experimental Apparatus

The following requirements were set in designing the rotating disk system: Electrochemical measurements had to be performed under careful exclusion of oxygen and moisture. Moderate but accurately known rotational speeds were desired. Working electrodes had to be easily interchangeable. The electrolyte volume was to be kept small because of the lengthy purification procedure of the solvent. In view of the unknown nature of later experiments the system had to provide for the use of various types and sizes of glass cells. The potential of the working electrode was to be measured accurately against a reference electrode of the second kind. Temperature was to be controlled to ±0.2°C

---

* C_+ is related to the concentration of the salt by $C_+ = C \cdot \nu_+$, ν_+ being the stoichiometric coefficient of the cation.

A system seemed best suited, which allows all handling of solutions and chemicals to be performed in a glove box, whereas the electrochemical measurements are made outside the box. The experimental apparatus designed for this purpose is shown in Figs. 1 to 6. It consists of a rigidly mounted drive unit, containing motor drive and mercury contact, and a detachable cell unit, containing the electrolytic cell and an argon bypass.

A commercially available torque unit (s)* containing a DC motor with closed loop tachometer feedback allows continuous variation of the rotation speed between 20 and 3600 rpm. Regulation is better than 1/2%. Calibration of the system was done stroboscopically against 60 cps line frequency harmonics or, at the lowest rotation speeds, by means of a stopwatch.

The shaft of the drive unit is rigidly fixed to the upper part of the hollow axle (n). Electrical contact to the axle is made by means of a stainless steel cylinder (c) rotating in a mercury pool. A mechanical coupling with rubber insert (q) containing plugs for electrical contact (v) connects the drive unit to the removable cell unit. A small spring in the female plug provides for slight flexibility of the contact. The cell unit is positioned with respect to the aluminum support (e) by means of three set screws, attached to the stainless steel cell cover (k). The lower part of the axle can be raised or lowered slightly with respect to the cell cover (k) by turning a brass bearing unit (j) threaded onto the argon bypass. Figure 2 shows the detailed arrangement: A "teflon" O-ring (f) is pressed against a protruding metal ring when the axle is in the upper position, thus sealing the cell. In this arrangement the cell unit can be transported from the glove box to the drive unit.

* SERVO-TEK Model ST-573-1.

Before an electrochemical experiment is started the argon bypass (l,m) is flushed with argon. The shaft is then lowered in order to allow free rotation during the measurement. Argon is flowing through the ante chamber throughout the measurements. Working electrodes (g) are made of stainless steel or nickel, press fitted into a teflon insulation (Figure 6). The electrode diameter is 1/8 inch, the total disk diameter 1/2 inch. The electrodes are screwed onto the axle and positioned as indicated in Figure 2. Eccentricity of the electrodes was less than 0.2 mil horizontally and less than 0.1 mil vertically.

A glass cell made from industrial Pyrex glass pipe is attached to the stainless steel cell cover (k) by means of a conventional cast aluminum flange (i) and sealed with a teflon O-ring (h). The cell usually contains ca. 250 ml electrolyte. A platinum wire (t) melted into the glass wall provides electrical contact for the counter electrode, either an amalgam electrode or a platinum sheet. Rigidly attached to the glass cell is the compartment for the reference electrode (u). A capillary (o) in the cell wall provides electrolytic connection between cell and reference electrode. The capillary is positioned in a horizontal plane with the disk electrode at virtually infinite distance. This arrangement provides for easy correction of IR drop included in the measured electrode potential[8]. The particular construction of the electrolytic cell using standard glass pipes and fittings allows the glass cell type used to be eventually interchanged by an U-cell or a cell of larger volume.

The argon supply is connected to the argon inlet (l) and the reference compartment by means of a three way stopcock (Figure 5). Thus pressure differences between cell and reference electrode compartment

are avoided. Constant temperature is maintained during the experiments by inserting the cell into a regulated temperature bath (±0.1°C) which rests on a platform that can be raised and lowered.

The performance of the rotating disk system was tested by measuring limiting currents of the reduction of ferricyanide at a mechanically polished nickel electrode of 0.082 cm^2 area. The solution used contained 0.05 M potassium ferricyanide, 0.05 M potassium ferrocyanide and 2.0 M sodium hydroxide, concentrations being determined by weight. Typical current voltage curves, obtained potentiostatically are shown in Fig. 7. The dependence of limiting currents (values at 1000 mV vs nickel reference electrode in the same solution) on the square root of rotational speed is given in Fig. 8. It shows a straight line as required by theory. The least square fit of the data intersects the ordinate at 0.028 ma instead of zero. The small deviation was not investigated further (see discussion in ref. 5).

C. Purification of Solvent and Salts

Recent chronopotentiometric[9] and potential sweep[2] studies have shown the strong influence of water present in propylene carbonate solutions on the cathodic deposition of lithium. According to these investigations cations in PC undergo preferred hydration. Even low water contents are of appreciable magnitude on the molar scale (e.g., 5 ppm water correspond to 2.8×10^{-4} moles per 1000 g solvent), and hence are very often of the same order of magnitude as the concentration of the dissolved salt. In addition, the active character of the metals to be deposited necessitated that solvent and atmosphere, in which the materials were handled, must be free of oxygen.

Based on these considerations special attention was paid to careful purification and handling of solvent and salts. Propylene carbonate* was distilled at 0.5 mm Hg by means of a commercially available column** packed with stainless steel helices. The head temperature was 65°C, the reflux ratio was 60. A slight flow of argon, dried over magnesium perchlorate, was introduced in order to prevent irregular boiling of the solvent. The first 10% and the last 20% of the solvent were discarded. Because of the strong tendency of propylene carbonate to dissolve stopcock grease a special receiver system of the column was designed. Any contact of grease and liquid solvent was excluded by the use of glass drip tips and teflon needle valve stopcocks† equipped with teflon O-rings.

Gas chromatographic analysis‡ of the purified solvent showed the presence of two impurities at very low concentration, one of which was identified as a trace of water. The water content of the purified solvent was below 5 ppm, which was the limit of sensitivity of the K. Fischer titration employed for its quantitative determination.

Salts used in this study were dried over phosphorous pentoxide for at least one week. Specially constructed vacuum drying vessels allowed heating the salts while the drying agent was kept at room temperature (Fig. 9). Easily hydrolyzed salts, e.g., $CaBr_2$, were predried *in vacuo* at room temperature, and only the last traces of water were removed at higher temperatures.

All materials were exclusively handled in dry argon atmosphere

* Jefferson Chemical Company, Houston, Texas.
**Semi-CAL Series 3650, Podbielniak, Franklin Park, Illinois.
† Delmar Scientific Laboratories, Inc., Maywood, Illinois.
‡ Conditions of these runs were: Ucon HB 2000 (polar) on graphite in glass columns; 152°C; carrier gas: helium; 5 μl samples. Propylene carbonate did not decompose in these columns.

inside a dry box, which was evacuated to below 1μ Hg prior to filling with the inert gas. The argon passed a U-tube with dry magnesium perchlorate for removal of water and a U-tube with BTS catalyst,* which is capable of removing oxygen to below 0.1 ppm by volume.[10] The water content of the purified argon was 1 ppm determined by means of a moisture monitor.**

D. Preliminary Experiments of Metal Deposition from PC Solutions

Attempts to deposit potassium from PC hitherto described in the literature[15,16] have been unsuccessful, for reasons as yet unexplained. It was therefore considered to be of interest to investigate the deposition of potassium from PC under well defined conditions with respect to hydrodynamics and purity of the solvent.

Experiments were carried out with stainless steel rotating disk cathodes of 0.082 cm^2 surface area. The anode was potassium amalgam of about 0.2% covering the bottom of the cell and exposing about 45 cm^2 active surface area to the solution. Constant current was applied to the cell. Cathode potentials against a thallium amalgam (6.3 atomic % Tl)-thallous iodide electrode in 0.13 M KI solution[17] were measured with an electrometer.† All experiments were carried out well below the limiting current, which was estimated as described in Appendix 1. After each of the experiments the electrodes were transferred under inert atmosphere to small gas tight cuvettes with thin optical glass windows for microscopic observation of the electrode surfaces. In the cuvette the electrode was kept in position by means of a metal spring, which pressed the edge of

* BASF, Ludwigshafen, Germany.
**"Moisture Monitor", Consolidated Electrodynamics Corp., Pasadena, Calif.
† Keithley, Potentiometric Electrometer Model 630.

the teflon disk against a thin teflon washer serving as spacer between the electrode surface and the glass window, thus avoiding contact and destruction of the deposit.

In the first experiment an attempt was made to measure the current voltage curve of the deposition of potassium from potassium iodide solution (0.13 mole/1000 g solvent). Prior to the measurement, a cathodic current of 0.6 ma was passed for 4.5 minutes at 3600 rpm. Afterwards various constant currents were applied, and the voltages between working and reference electrode were measured. The results are given in Fig. 10. Three regions can be distinguished. Up to about 0.05 ma (electrode area = 0.0082 cm^2) the potential increased rapidly to about 10 volts (region A). Increase of the applied current up to about 1.0 ma resulted in much smaller change of potential (region B). With further increase of current to 2.2 ma, the potential jumped up to approximately 60 volts (region C). The values given in Fig. 10 are approximate steady state values; the potential became constant only after several minutes. Based on the findings given in Fig. 10, constant current experiments were carried out in region A and region B. Curve I of Fig. 11 gives the time dependence of the potential at 6μ amp and 3600 rpm. A sharp increase of the potential was noticed after passage of about 60 m coulomb. At the end of the experiment the cathode had a dull appearance and showed alkaline reaction on wet pH paper.

Curve II in Fig. 11 was obtained at 0.4 ma and 3600 rpm under otherwise identical conditions. The measured potentials showed a slight increase with time; they were well reproducible in a second run under the same conditions.

Figures 12 and 13 show deposits obtained in these experiments after passage of 0.96 coulomb and 0.24 coulomb, respectively. The deposit had a dark gray irregular appearance indicating codeposition of decomposition products. Upon exposure to the atmosphere the deposits liquified and showed gas evolution. A strongly alkaline reaction of the deposit on dissolution in water was observed.

In addition to deposition from potassium iodide solution an experiment was carried out using a solution of potassium hexafluorophosphate (about 0.05 moles/1000 g PC). Thallium amalgam (6.28 atomic % Th)- thallous bromide with 0.096 M lithium bromide in PC served as reference electrode. Results of the constant current experiments at 0.1 ma and 3600 rpm are given in Fig. 14. The appearance of the deposit was similar to those obtained from potassium iodide solution, with the exception of some visible spiral flow patterns.

The experiments discussed, directed toward the deposition of potassium from PC solutions yielded metallic deposits, but only in very impure form. The possibility cannot be excluded that traces of oxygen or water in amounts below the given detection limits favored the observed solvent decomposition. Considering the careful purification procedures employed it seems much more likely, however, that decomposition of PC was due to the applied high cathode potentials. It is concluded that PC is not a suitable solvent for cathodic deposition of potassium.

The possibility of depositing calcium from PC solutions was explored by electrolyzing a 0.105 M $CaBr_2$ solution at constant current and 3600 rpm. Figure 15 represents the potential-time behavior obtained at 0.1 ma (curve II and 0.5 ma (curve I), respectively. No deposits could be observed on the stainless steel base. A deep blue color appeared at the cathode

surface*, however, it disappeared immediately after exposure to the argon atmosphere inside the glove box**.

---

* The same behavior was observed when a calcium metal block was substituted for the stainless steel cathode.

** Deep blue solutions of alkali and alkaline earth metals are known in several solvents, such as liquid ammonia or several amines, the blue color resulting from solvated electrons.

APPENDIX I.

Estimation of the Limiting Current

The estimation of the limiting current density for potassium deposition from potassium iodide solution in PC (Equation I-2) requires the value of the diffusion coefficient of potassium iodide and the ionic concentrations. Since these data have not been reported for propylene carbonate, the diffusion coefficient was estimated in two independent ways, which at the same time gave some knowledge of the degree of dissociation of potassium iodide at the concentrations used.

1) Diffusion coefficients of KI in PC were estimated using Walden's rule:

$$D_{PC} = D_S \frac{\eta_S}{\eta_{PC}} \quad . \qquad \text{(I-1)}$$

η_{PC} and η_S are the viscosities of propylene carbonate and the reference solvent, respectively. D_S is the diffusion coefficient of the salt in the reference solvent. Except for the case of water, where a measured value was used, D_S was derived from the limiting molar conductivity Λ_S° of KI in the respective solvent by applying Einstein's formula:

$$D_S = \frac{RT}{F^2} \Lambda_S^\circ \quad . \qquad \text{(I-2)}$$

All values are summarized in Table I. It is to be noticed that the basis of these values is complete dissociation of KI in the reference solvent. Agreement of D_{PC} calculated from different types of solvents is within 21% indicating the applicability of Walden's rule for the estimate of D_{PC} .

2) The specific conductivity $\varkappa$ of potassium iodide at the saturation concentration C = 0.186 moles/lt (0.223 moles/1000 g solvent) was

measured by Harris[1] to be $\kappa = 4.41 \times 10^{-3}\ \Omega^{-1}\ cm^{-1}$. This corresponds to a molar conductivity of $\Lambda^{\circ}_{PC} = 23.6\ cm^2\ \Omega^{-1}\ mole^{-1}$ if complete dissociation is assumed.

Applying Einstein's formula, a diffusion coefficient $D_{PC} = 6.2 \times 10^{-6}$ cm^2/sec is obtained. This value agrees within 10% with the average value of D_{PC} given in Table I. Since the latter values were based on data (Λ°_{S}) obtained under conditions of complete dissociation, the agreement between the two estimates gives good evidence that potassium iodide in PC at about 0.1 M is largely dissociated.

It may be of interest to compare similar estimations of diffusion coefficients of other potassium salts, e.g., KBr and KCl. The results are given in Table II. They demonstrate a similarly good agreement between the two methods of estimation outlined above.

With the estimated values of the diffusion coefficient and of the degree of dissociation the limiting current for the potassium deposition from potassium iodide solutions in PC can be estimated. The experimental conditions are given in section D. Inserting the values

$$D_{PC} = 6 \times 10^{-6}\ cm^2/sec$$
$$\nu = 2.53 \times 10^{-2}\ cm^2/sec$$
$$\omega = 3600\ rpm = 377\ rad/sec$$
$$C_+ = 0.13 \times 10^{-3}\ mole/cm^3$$
$$B_{(Sc)} = 0.62$$
$$A = 0.082\ cm^2\ \text{(surface area of the electrode)}$$

into Equation 2:

$$I_\ell = A\ i_\ell = \frac{zF}{t_-} B_{(Sc)} D_S^{2/3} \nu^{-1/6} \omega^{1/2} C_+ A$$

and assuming the transference number 0.5 for the anion one obtains the

limiting current

$$I_\ell \approx 15 \text{ mA}.$$

This value is one order of magnitude higher than the highest current applied. The magnitude of the estimated limiting current demonstrates further that the observed potential increase with current (Figure 10, region C) at about 1.5 mA is not due to rate limitation by mass transfer.

Table I. Estimation of Diffusion Coefficient of KI in PC according to Walden's Rule.

Solvent	$\Lambda_S^\circ(25°C)$ ($cm^2\Omega^{-1}mole^{-1}$)	η_S(cP)	$10^5 x D_s(25°C)$ (cm^2sec^{-1})	$10^6 x D_{PC}$ (cm^2sec^{-1})
H_2O	---	1.0 (25°C)	1.875 (12)	7.3
CH_3CN	18.7 (11)	0.34 (25°C) (12)	4.88	6.7
HCN	310.5 (13)	0.201 (20.1°C) (14)	8.1	6.1
CH_3OH	115.2 (13)	0.547 (25°C) (12)	3.0	6.5
C_2H_5OH	50.8 (13)	1.200 (20°C) (12) 1.003 (30°C) (12)	1.31	6.0
CH_3COCH_3	196.6 (13)	0.316 (25°C) (12)	5.13	6.3

Table II. Estimation of Diffusion Coefficients of KBr and KCl in Propylene Carbonate.

Salt	$10^6 x D_{PC}$	Derived from
KBr	7.8	$\mathcal{K}_{PC} = 1.48 \times 10^{-4} \Omega^{-1} cm^{-1}$ at 6×10^{-3} M KBr in PC (1)
	7.4	$D_{H_2O} = 1.874 \times 10^{-5}$ cm^2/sec at 0.1 M KBr in H_2O (12)
	7.5	$\Lambda^{\circ}_{HCN} = 362.2$ $cm^2 \Omega^{-1} mole^{-1}$ (18°C) at infinite dilution in HCN (13)
KCl	8.7	$\mathcal{K}_{PC} = 1.06 \times 10^{-5}$ $\Omega^{-1} cm^{-1}$ at 4×10^{-4} M KCl in PC (1)
	7.3	$D_{H_2O} = 1.844 \times 10^{-5}$ cm^2/sec at 0.1 M KCl in H_2O (12)
	7.5	$\Lambda^{\circ}_{HCN} = 363.4$ $cm^2 \Omega^{-1} mole^{-1}$ (18°C) at infinite dilution in HCN (13)

References

1. W. S. Harris, Electrochemical Studies in Cyclic Esters, Thesis, University of California, Berkeley, 1958.

2. A. N. Dey, J. Electrochem. Soc., 114, 823 (1967).

3. N. Ibl, Advances in Electrochemistry and Electrochemical Engineering, P. Delahay and C. W. Tobias, eds., vol. 2 (1962), pp. 49-145.

4. V. Levich, Physicochemical Hydrodynamics, Prentice-Hall, New York (1962).

5. A. C. Riddiford, Advances in Electrochemistry and Electrochemical Engineering, P. Delahay and C. W. Tobias, eds., vol. 4 (1966), pp. 47-117.

6. J. Newman, J. Phys. Chem. 70, 1327 (1966).

7. J. Newman, Advances in Electrochemistry and Electrochemical Engineering, P. Delahay and C. W. Tobias, eds., vol. 5 (1967), pp. 87-135.

8. J. Newman, J. Electrochem. Soc. 113, 501 (1966).

9. K. R. Hill and R. G. Selim, Research and Development of a High Capacity Non-Aqueous Secondary Battery, Final Report, August 1965, NASA-CR 54,880, Contract No. NAS 3-2780, Mallory and Company, Inc.

10. "BTS Katalysator für die Feinreinigung von Gasen und Flüssigkeiten in Labor und Grosstechnik, BASF, Ludwigshafen, B 302d, 5.63, 84 354.

11. M. L. Klaar, Acetonitril als ionisierendes Lösungsmittel, Dissertation, Technische Universitat Berlin, 1959.

12. R. C. West and S. M. Selby, ed., Handbook of Chemistry and Physics, The Chemical Rubber Company, Cleveland, Ohio, 1966.

13. Landolt-Börnstein, Zahlenwerte und Funktionen aus Physik, Chemie, Astronomie, Geophysik, Technik, Springer-Verlag, 6. Aufl., Berlin, Göttingen, Heidelberg, 1960, vol. 7, II, pp. 351-380.

14. H. H. Sisler, Chemistry in Non-Aqueous Solvents, Reinhold Publishing Corporation, New York (1961), p. 103.

15. A. Brenner, Advances in Electrochemistry and Electrochemical Engineering, P. Delahay and C. W. Tobias, eds., vol. 5 (1967), pp.212-214.

16. Mallory and Company, Inc., "Research and Development of a High Capacity Nonaqueous Secondary Battery", First Quarterly Report, 1965; CR 54 319, Contract No. NAS 3-6017.

17. F. G. K. Baucke and C. W. Tobias, Thallium-Thallous Halide Reference Electrodes in Propylene Carbonate, UCRL-17892, November 1967; submitted to the Journal of the Electrochemical Society.

Figure Captions

Figure 1. Cross section of rotating disk electrode system.

a	bearings	n	hollow stainless steel axle
b	lucite	o	capillary
c	stainless steel cylinders	p	isolation glued to metal parts
d	mercury	q	flexible coupling with rubber insert
e	aluminum support	r	rubber gasket
f	seal	s	constant speed drive
g	rotating disk electrode	t	platinum contact for counter electrode
h	teflon O-ring	u	platinum contact for reference electrode
i	cast aluminum flange	v	slightly flexible contact
j	bearing unit for positioning of axle	x	teflon washer
		y	teflon isolation
k	stainless steel cell cover	z	bakelite
l	argon inlet		
m	argon outlet		

Figure 2. Cross section of argon bypass and seal. For captions see Figure 1.

Figure 3. Cross section of mercury contact and flexible coupling. For captions see Figure 1.

Figure 4. Overall view of experimental setup.

Figure 5. Detachable cell unit.

Figure 6. Rotating disk electrodes embedded in teflon.

Figure 7. Current voltage curves of reduction of 0.05 M potassium ferricyanide in 2 N NaOH. Potential in mV vs Ni electrode in same solution. (electrode area = 0.082 cm^2).

Figure 8. Dependence of limiting currents of potassium ferricyanide reduction on rotation speed.

Figure 9. Arrangement for drying salts under vacuum.

Figure 10. Current-potential curve of K deposition from 0.13 M KI in PC at 3600 rpm: O - increasing current; X - decreasing current.

Figure 11. Potential vs time of K deposition from 0.13 M KI in PC at constant current and at 3600 rpm: I - 6 μA; II - 0.4 mA. Electrode area = 0.082 cm^2.

Figure 12. Deposit obtained from 0.13 M KI in PC after passage of 0.96 coulomb at 0.4 mA, 3600 rpm. Electrode area = 0.082 cm^2.

Figure 13. Deposit obtained from 0.13 M KI in PC after passage of 0.24 coulomb at 0.4 mA, 3600 rpm. Electrode area = 0.082 cm^2.

Figure 14. Potential vs time of K deposition from 0.05 M KPF_6 in PC at 0.1 mA and 3600 rpm. Electrode area = 0.082 cm^2.

Figure 15. Potential vs time of Ca deposition from 0.105 M $CaBr_2$ in PC at constant current and 3600 rpm. Electrode area = 0.082 cm^2.

I - 0.5 ma II - 0.1 ma

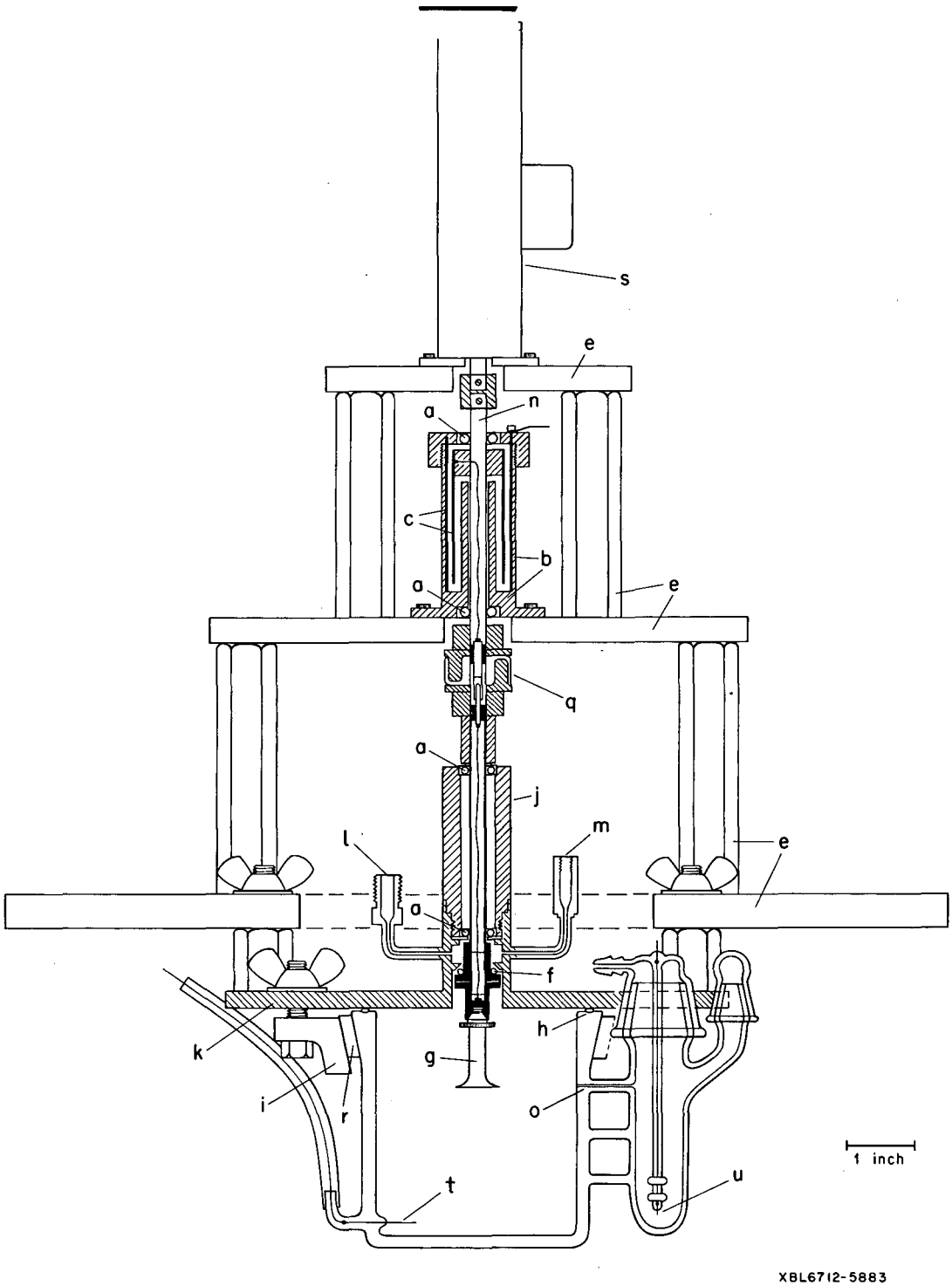

Figure 1

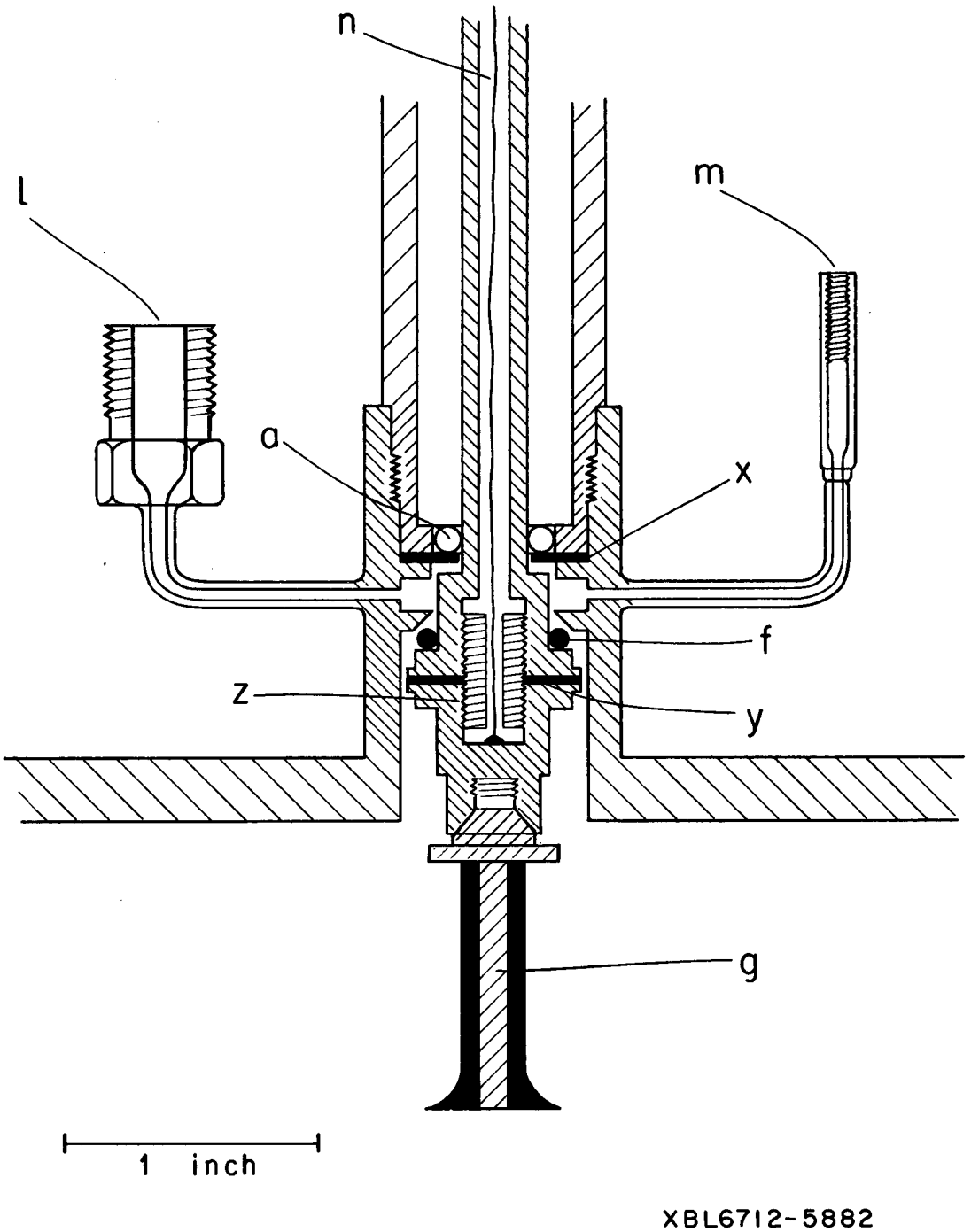

Figure 2

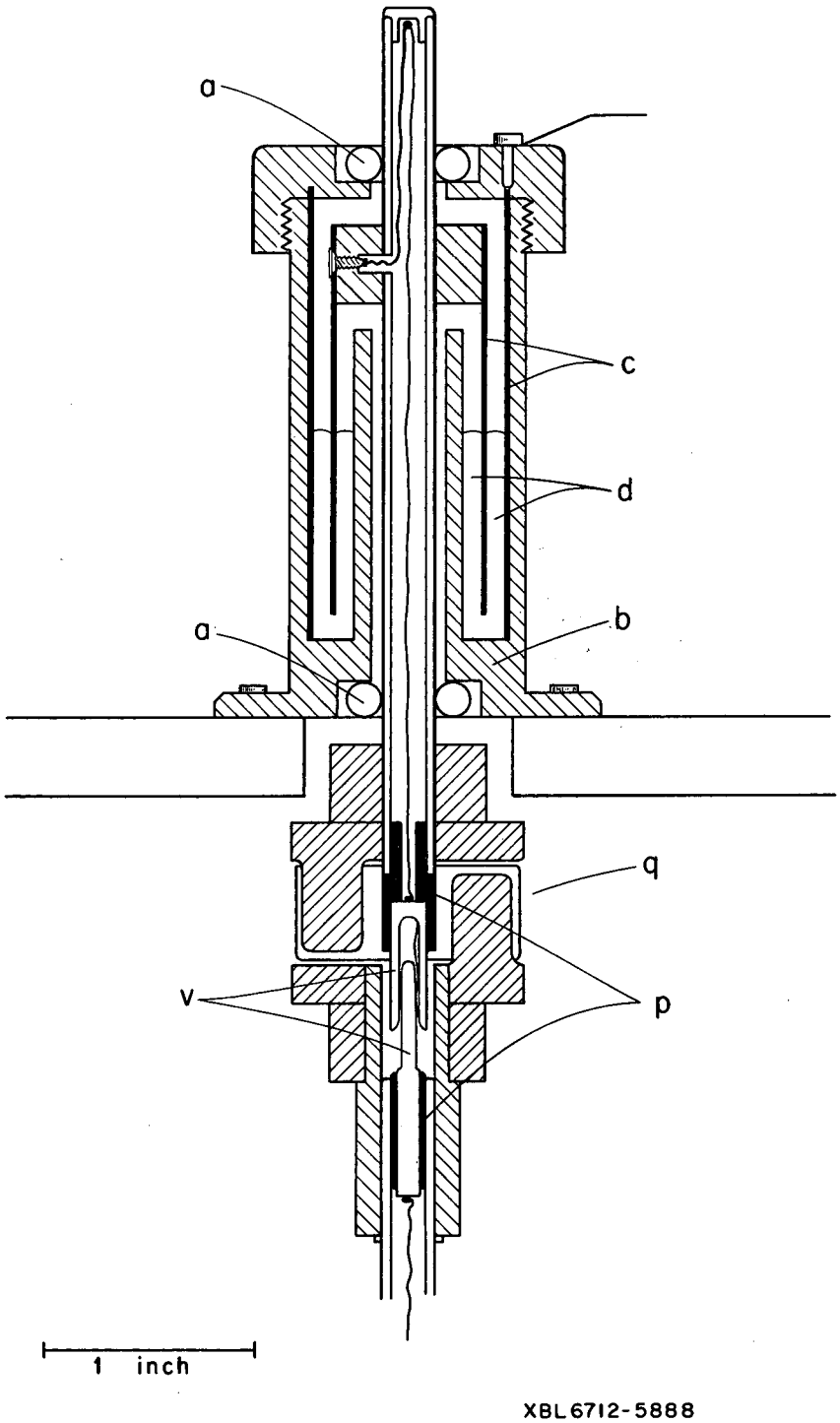

Figure 3

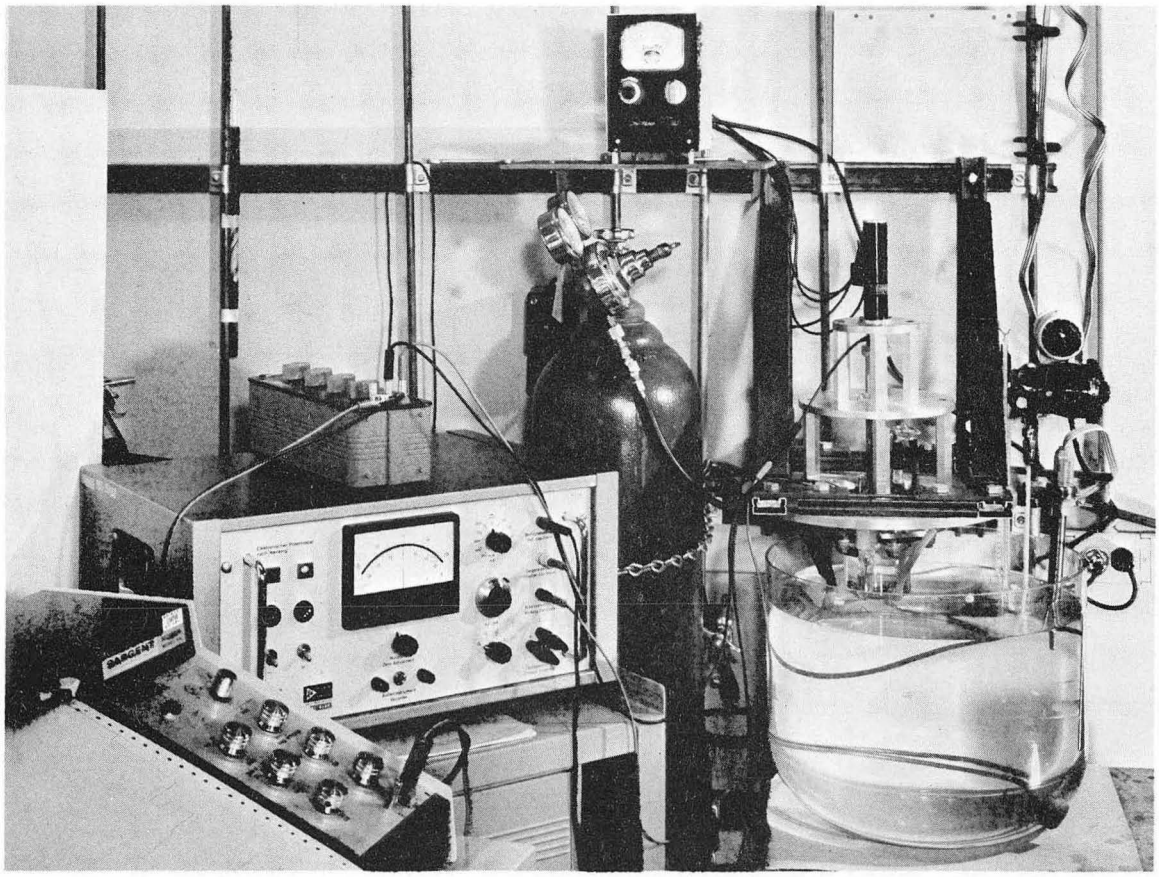

CBB 679-5187

Figure 4

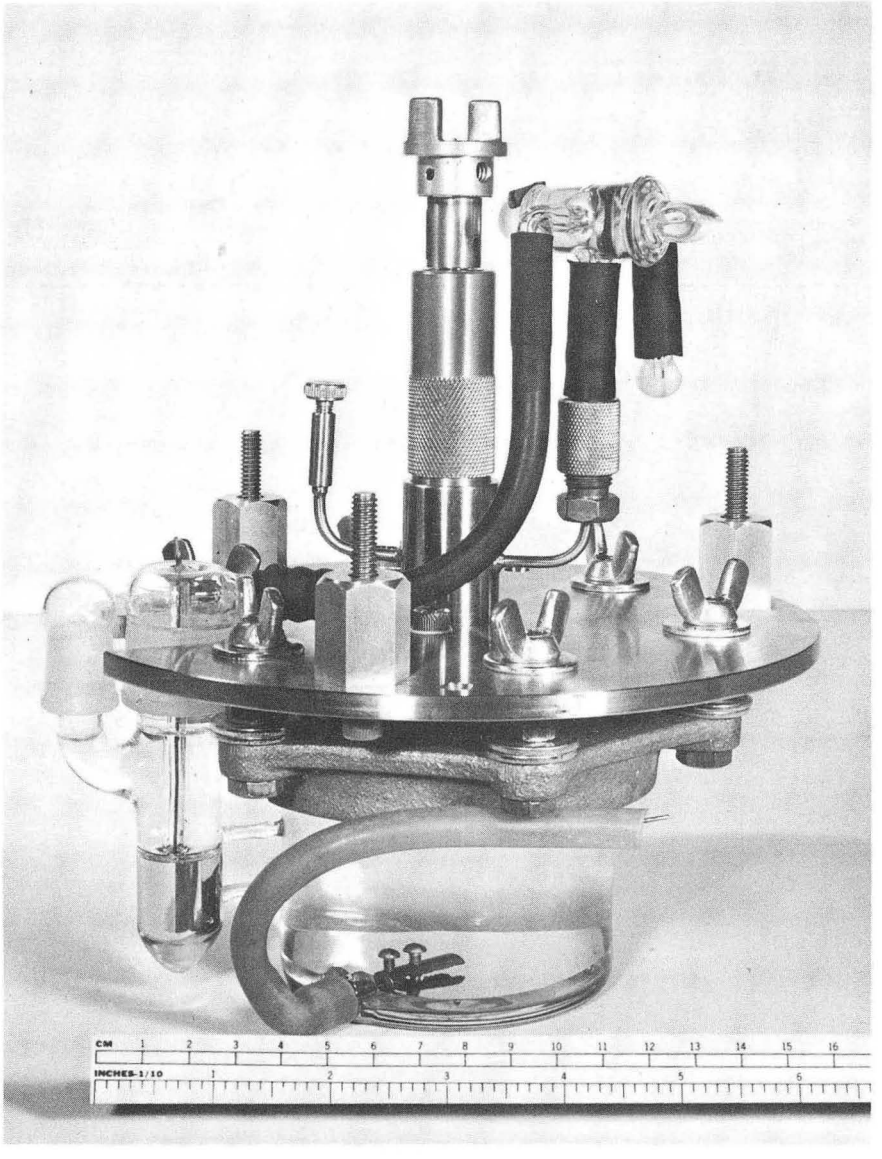

CBB 679-5189

Figure 5

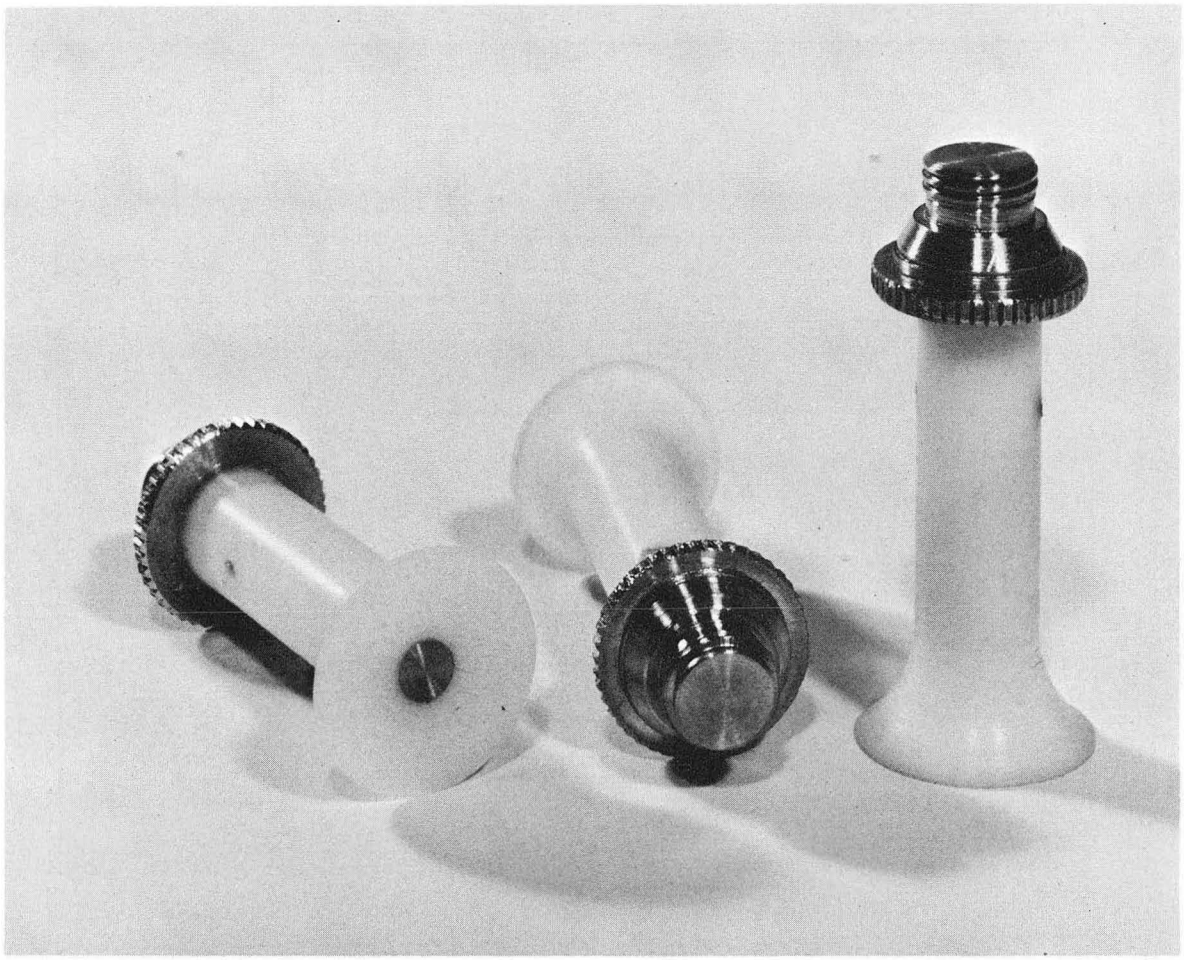

XBB 679-5193

Figure 6

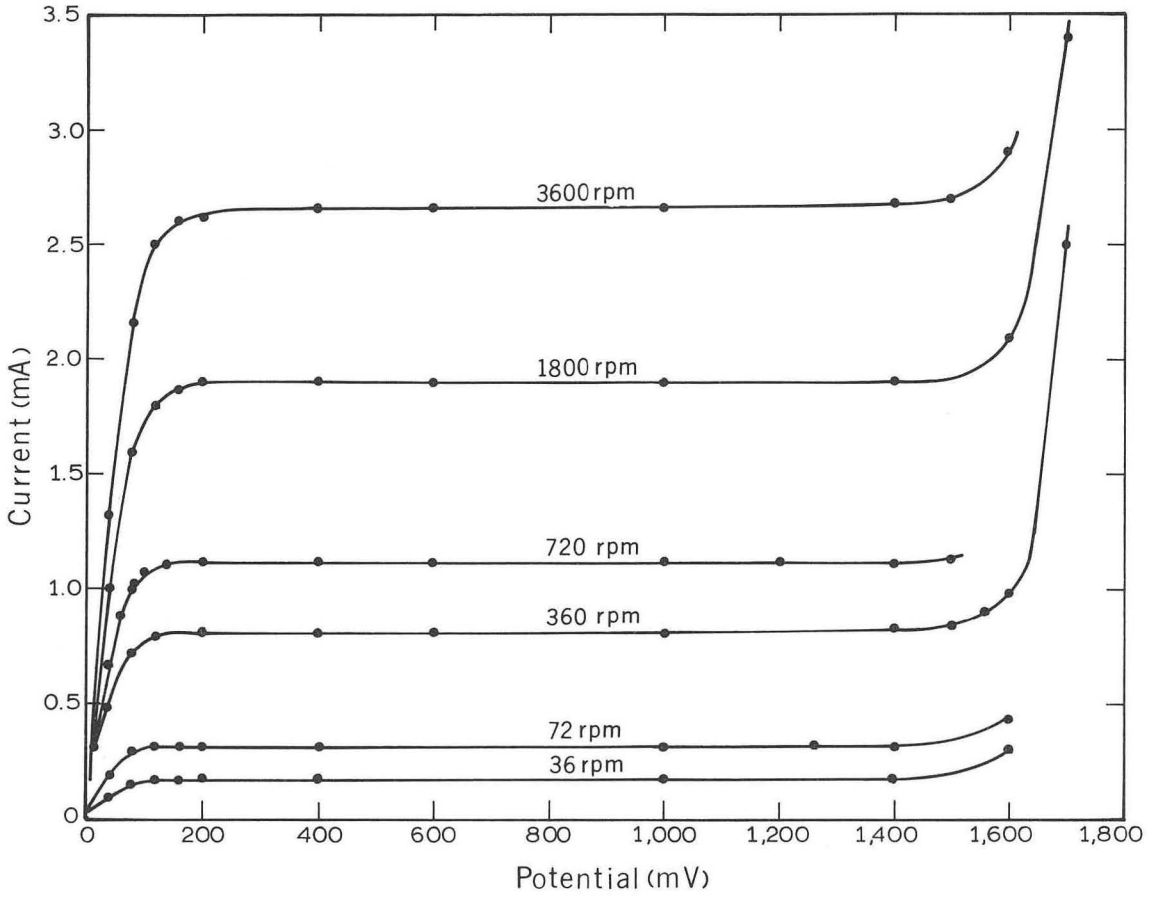

XBL 6710 2101-A

Figure 7

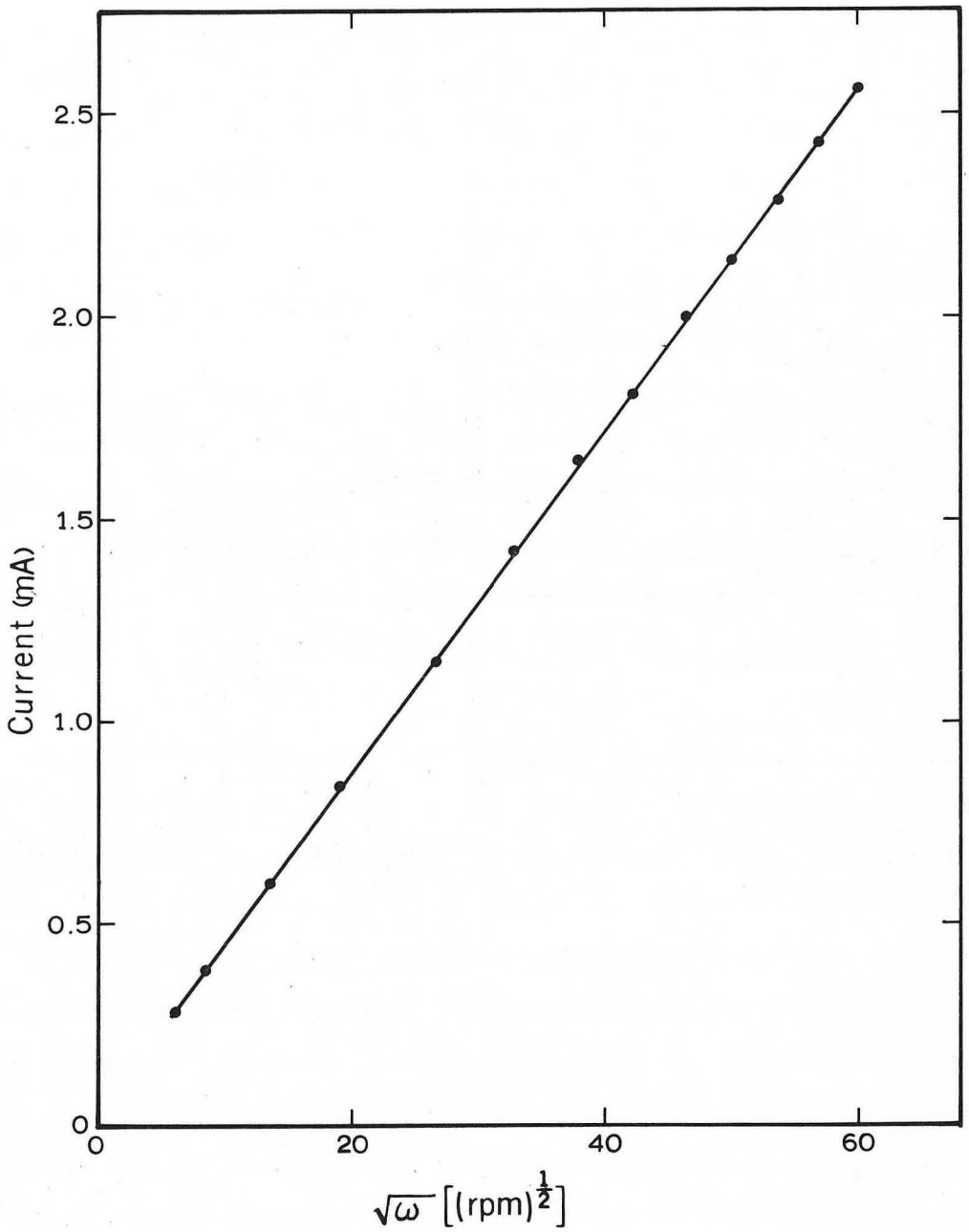

XBL 67102100

Figure 8

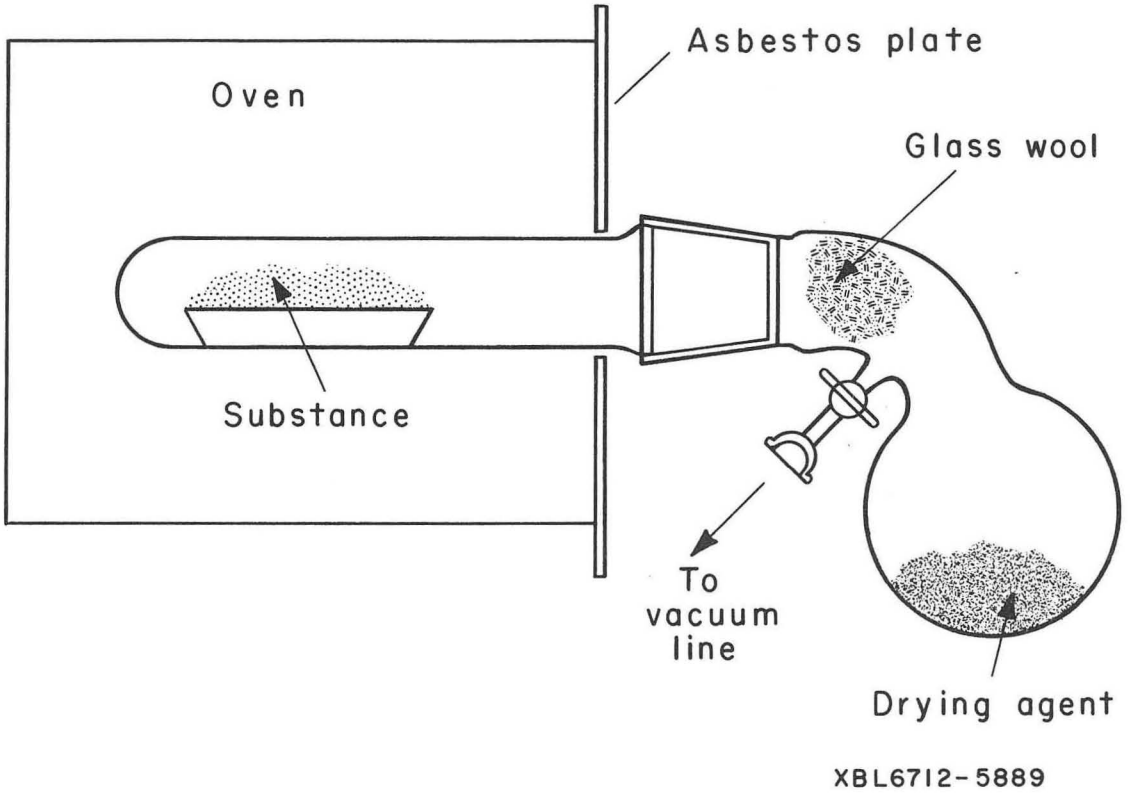
Asbestos plate
Oven
Glass wool
Substance
To
vacuum
line
Drying agent
XBL6712-5889

Figure 9

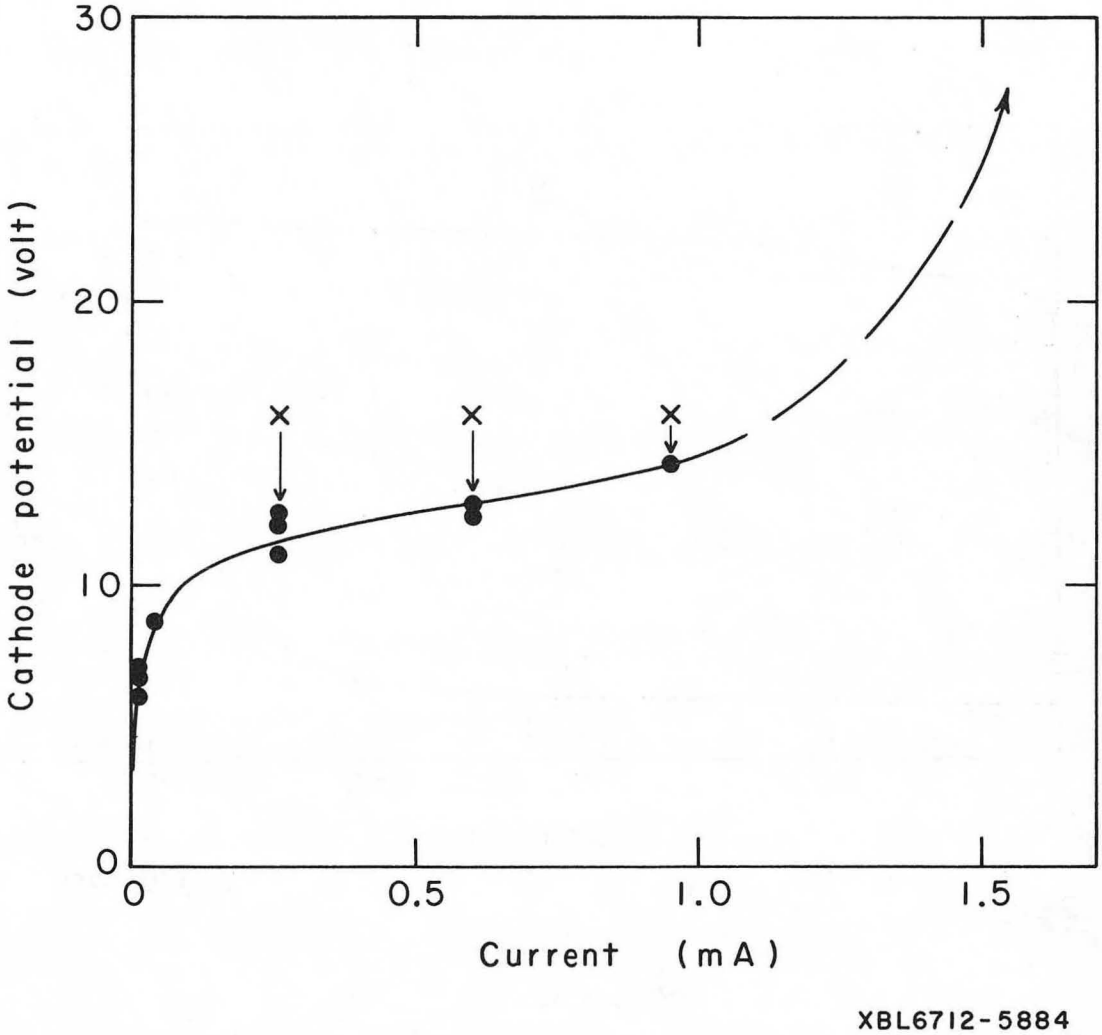
30
20
10
0
Cathode potential (volt)
0
0.5
1.0
1.5
Current (mA)
XBL6712-5884

Figure 10

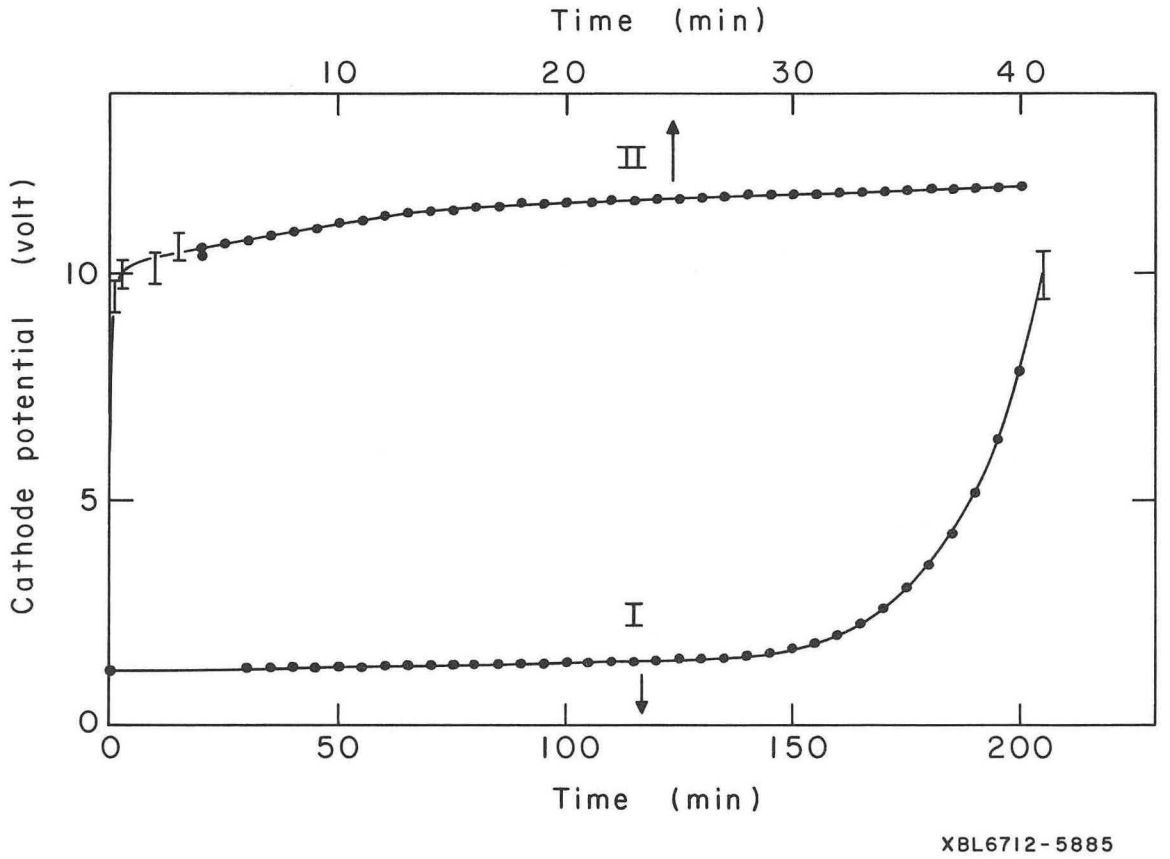
Time (min)
10
20
30
40
II
I
Cathode potential (volt)
10
5
0
0
50
100
150
200
Time (min)
XBL6712-5885

Figure 11

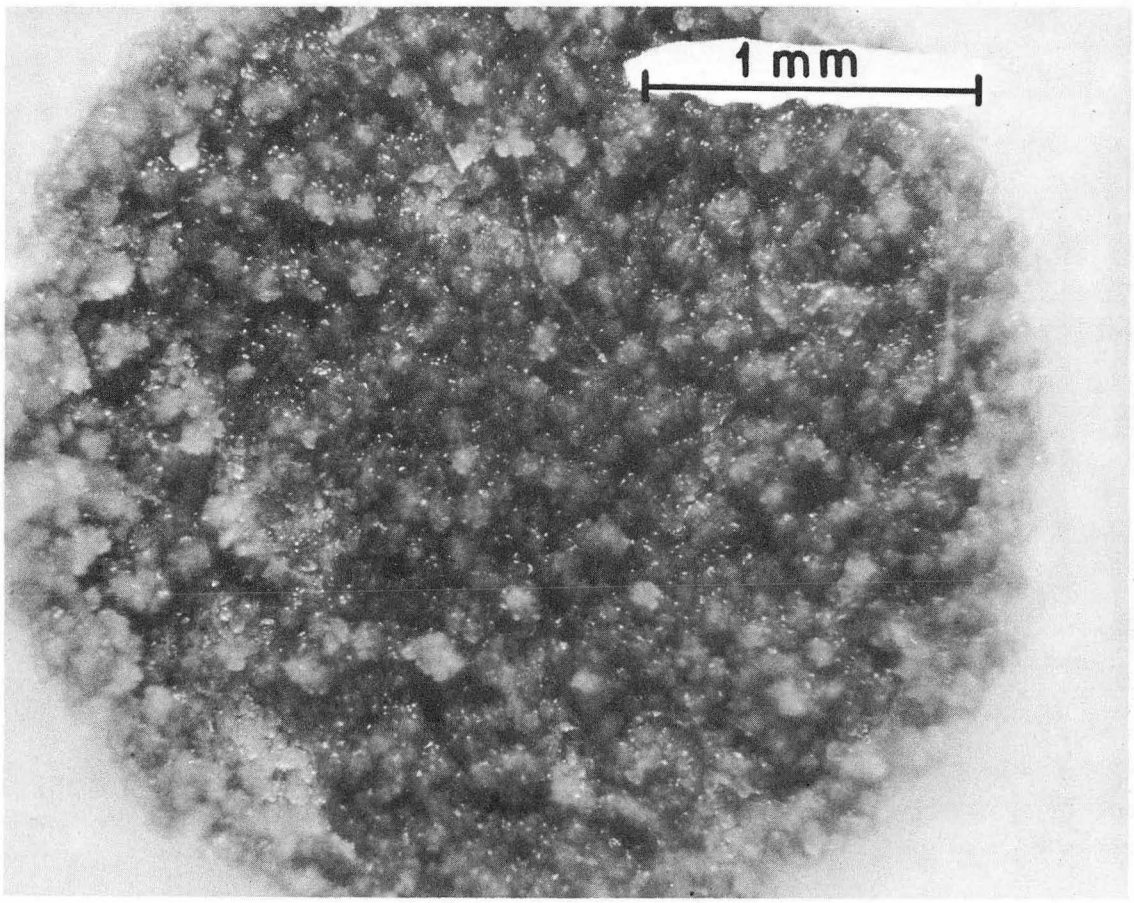

XBB 6712-6942

Figure 12

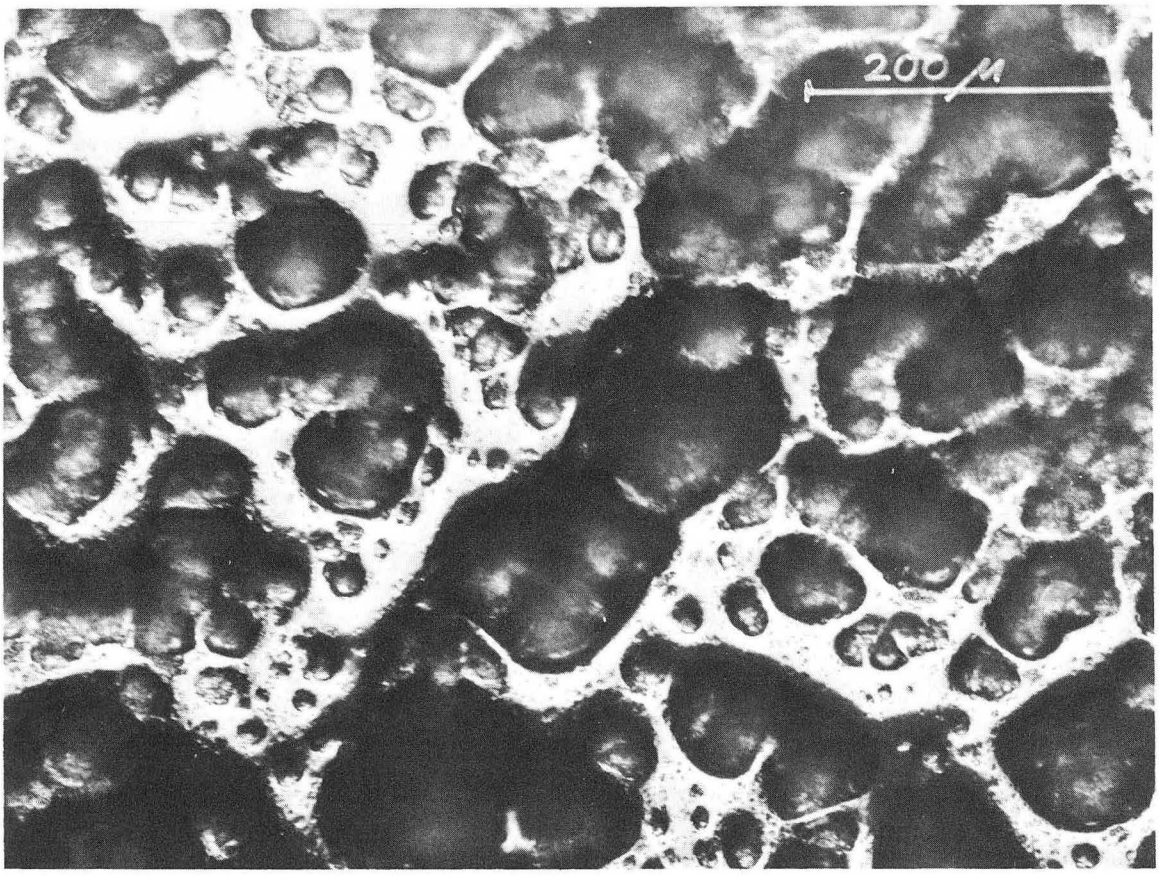

XBB 6712-6943

Figure 13

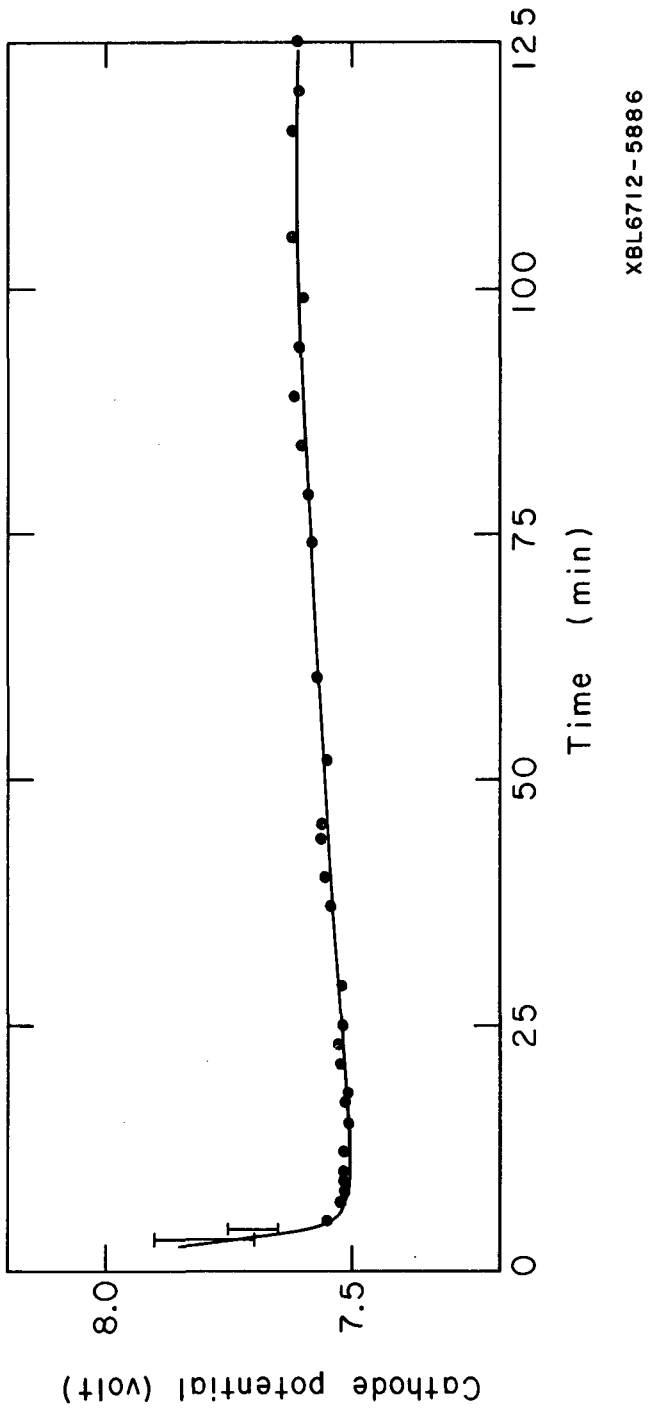
Cathode potential (volt)
8.0
7.5
0
25
50
75
100
125
Time (min)
XBL6712-5886

Figure 14

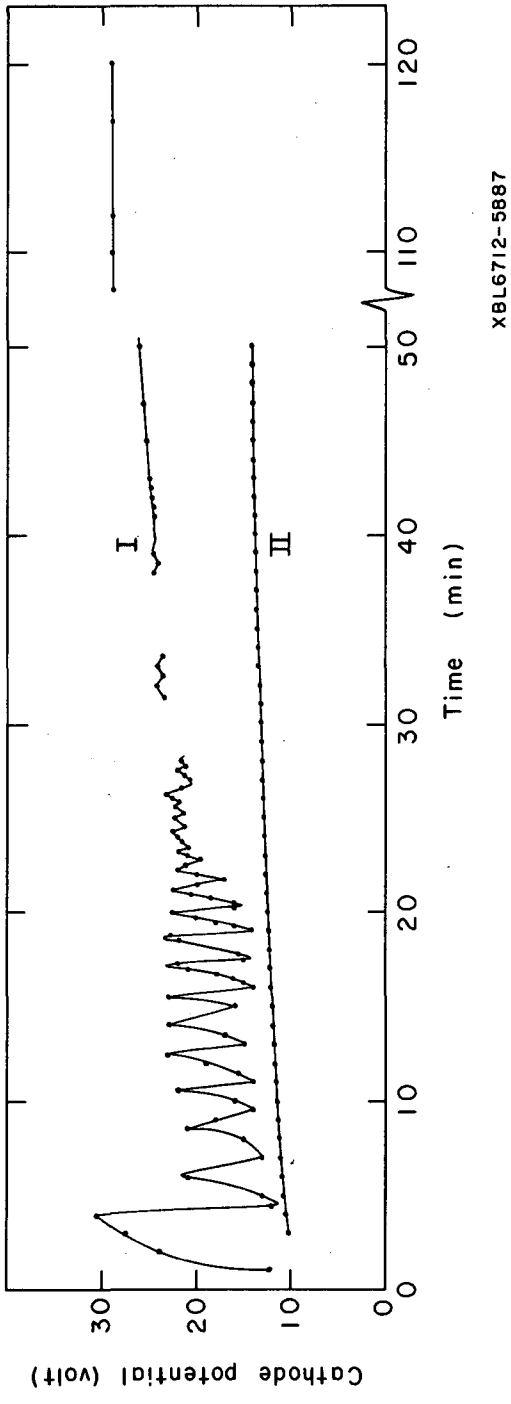
Cathode potential (volt)
30
20
10
0
0
10
20
30
40
50
110
120
Time (min)
I
II
XBL6712-5887

Figure 15

This report was prepared as an account of Government sponsored work. Neither the United States, nor the Commission, nor any person acting on behalf of the Commission:

A. Makes any warranty or representation, expressed or implied, with respect to the accuracy, completeness, or usefulness of the information contained in this report, or that the use of any information, apparatus, method, or process disclosed in this report may not infringe privately owned rights; or

B. Assumes any liabilities with respect to the use of, or for damages resulting from the use of any information, apparatus, method, or process disclosed in this report.

As used in the above, "person acting on behalf of the Commission" includes any employee or contractor of the Commission, or employee of such contractor, to the extent that such employee or contractor of the Commission, or employee of such contractor prepares, disseminates, or provides access to, any information pursuant to his employment or contract with the Commission, or his employment with such contractor.