UCRL-18058

Cy. 2

University of California

Ernest O. Lawrence Radiation Laboratory

METHOD OF MEASURING NANOSECOND ISOMERIC STATES PRODUCED IN (particle,xn) REACTIONS

T. Yamazaki and G. T. Ewan

January 1968

RECEIVED
LAWRENCE
RADIATION LABORATORY
MAY 24 1968
LIBRARY AND
DOCUMENTS SECTION

TWO-WEEK LOAN COPY

This is a Library Circulating Copy which may be borrowed for two weeks. For a personal retention copy, call Tech. Info. Division, Ext. 5545

UCRL-18058 Cy. 2

DISCLAIMER

This document was prepared as an account of work sponsored by the United States Government. While this document is believed to contain correct information, neither the United States Government nor any agency thereof, nor the Regents of the University of California, nor any of their employees, makes any warranty, express or implied, or assumes any legal responsibility for the accuracy, completeness, or usefulness of any information, apparatus, product, or process disclosed, or represents that its use would not infringe privately owned rights. Reference herein to any specific commercial product, process, or service by its trade name, trademark, manufacturer, or otherwise, does not necessarily constitute or imply its endorsement, recommendation, or favoring by the United States Government or any agency thereof, or the Regents of the University of California. The views and opinions of authors expressed herein do not necessarily state or reflect those of the United States Government or any agency thereof or the Regents of the University of California.

Submitted to Nucl. Instr. Methods

UCRL-18058
Preprint

UNIVERSITY OF CALIFORNIA

Lawrence Radiation Laboratory
Berkeley, California

AEC Contract No. W-7405-eng-48

METHOD OF MEASURING NANOSECOND ISOMERIC STATES PRODUCED IN (particle,xn) REACTIONS

T. Yamazaki and G. T. Ewan

January 1968

Submitted to Nucl. Instr. Methods

UCRL-18058
Preprint

UNIVERSITY OF CALIFORNIA

Lawrence Radiation Laboratory
Berkeley, California

AEC Contract No. W-7405-eng-48

METHOD OF MEASURING NANOSECOND ISOMERIC STATES PRODUCED IN (particle,xn) REACTIONS

T. Yamazaki and G. T. Ewan

January 1968

Method of Measuring Nanosecond Isomeric States Produced in (particle, xn) Reactions

T. Yamazaki* and G.T. Ewan**

Lawrence Radiation Laboratory, University of California
Berkeley, California, U.S.A.

ABSTRACT

A simple method for measuring the life-times of gamma-transitions from nanosecond isomeric states is described. The method depends on the phase grouping of beam pulses in a cyclotron and the fast timing properties of Ge(Li) detectors.

This letter reports a simple method for the systematic observation of isomeric states with lifetimes longer than a few nanoseconds that are populated in (particle, xn) reactions. The method depends on the natural phase grouping of beam pulses from a cyclotron and the fast timing properties of Ge(Li) detectors. We have used this method to study isomeric states in a number of Sn and Po isotopes[1].

---

* Present Address: Department of Physics, University of Tokyo, Bunkyo-ku, Tokyo, Japan.

** Permanent Address: Chalk River Nuclear Laboratory, Chalk River, Ontario, Canada.

The use of beam bunches from fixed frequency cyclotrons to give a zero of time for time-of-flight studies with neutrons has been reviewed by Bloom[2]. The time-of-flight distribution of the neutrons between the beam bunches is studied. A similar principle is applied in our method for studying nanosecond isomeric states. In our experiments we have used the external beam from the Berkeley 88" sector-focussed cyclotron. The beam bunches are used to generate a zero time signal, and the time distribution of γ-rays from a target is studied. The beam bunches from the cyclotron are typically 4 nsec wide and the repetition frequency is 100-170 nsec, depending on the particle being accelerated and on the energy. In most of our experiments 20 to 50 MeV α-particles were used to bombard the targets.

The γ-rays are studied with a Ge(Li) γ-ray detector. The fast timing properties of Ge(Li) detectors have recently been discussed by several workers[3]. To obtain fast timing it is essential to use leading-edge rather than cross-over timing. The time resolution obtainable depends on the energy of the γ-ray being studied and on the size of the Ge(Li) detector. With 3 mm thick planar detectors, full widths at half-maximum of 2.7 nsec have been obtained for 511 keV γ-rays[4]. The half-slope on the edge of the curve can be as low as 1 nsec, although at $\sim$ 1/50 peak height there is usually a tail with a greater slope.

In our experiments the cyclotron r.f. oscillator is used to generate the zero time signal and the time distribution of the γ-rays is studied with planar Ge(Li) γ-ray detectors. A simplified

block diagram of the apparatus is shown in fig. 1. The fast signal from the Ge(Li) γ-ray spectrometer is used to generate the start signal for a time-to-height converter, and the signal from the r.f. oscillator, suitably delayed, to generate the stop signal. For convenience, only every second pulse from the cyclotron generates a stope signal. This gives two prompt peaks, as illustrated in the schematic time distribution shown in fig. 1. The output of the time-to-height converter is fed to a mixer amplifier where a correction is applied to compensate approximately for the time "walk" with pulse-height associated with leading edge timing. This correction is not critical as we are studying time distributions of individual γ-ray peaks and the "walk" only causes a shift in the position of "zero-time" for different energies. The energy signal from the Ge(Li) detector system and the time-signal are analysed in a two-dimensional analyser, usually with 256 energy channels and 16 time channels.

A schematic diagram of the experimental arrangement used with the cyclotron is shown in fig. 2. The analysed beam strikes a thin target in a simple target chamber, and the transmitted beam is stopped in a well-shielded beam-catcher. The γ-ray spectrum is studied with a Ge(Li) detector surrounded by a thick lead collimator to reduce the background from γ-rays from the defining slits and from possible sources other than the target.

Fig. 3a shows a typical part of a two-dimensional γ-ray spectrum observed when a target of ^{208}Pb was bombarded with 50 MeV α-particles. This spectrum is mainly due to the ^{208}Pb(α, 4n)^{208}Po

reaction. It was obtained with a 2 cm^2 x 5 mm thick thin-window Ge(Li) detector and with 256 channels for energy analysis and 16 channels for time analysis. Only a few of the spectra are shown, corresponding to five different time channels spaced by approximately 18 nsec. Some peaks, e.g. γ-145, decay very rapidly and give the prompt time distribution; others decay more slowly indicating the presence of isomeric states. The γ-rays may either come directly from the isomeric state or from a level fed by a transition from such a state. These spectra have also been studied with 256 channels for time analysis and 16 channels for energy analysis. Fig. 3b shows the time spectrum for the 147 keV peak. This curve was obtained by setting a gate on the 147 keV peak and subtracting the contribution due to Compton events from higher energy γ-rays. Because of the width of the energy window ($\sim$ 3.5 keV), the spectrum includes a small amount of the 145 keV prompt peak. The slope of the time curve shows that the 147 keV peak has a half-life of 8.3 ± 0.5 nsec. The "prompt" curve shown in fig. 3b was obtained from the energy window above the 147 keV peak after correction for the contribution from the "long-lived" 176 keV peak. This curve still contains a small contribution from higher-energy γ-rays with a 4 nsec half-life as well as from prompt events.

The method described in this letter has been used to study nanosecond isomeric states in isotopes of tin from ^{108}Sn to ^{118}Sn and for ^{208}Po and ^{210}Po. Because of the simplicity of the apparatus, data are accumulated very rapidly. The lower limit of

measurable half-lives depends on the time spread of the cyclotron beam bunches and on the timing properties of the Ge(Li) detector. For γ-rays of $\sim$ 1 MeV this limit is $\sim$ 2 nsec, and for γ-rays of 150 keV the limit is $\sim$ 4 nsec, if 5 mm thick Ge(Li) detectors are used. In our experiments we used a zero-time pulse from the cyclotron oscillator. There is a small time drift between this signal and the beam bunches striking the target. This source of time spread could be reduced by deriving the zero-time pulse directly from the beam bunch. Although it is possible to detect very long-lived isomers, it is hard to measure the half-life if it is longer than 300 nsec because we only observe the decay between beam bunches. A system that removed bunches from the beam would enable longer half-lives to be measured. Isomers in that region can also be studied by other techniques[5].

The aim of our experiments was to identify and measure the half-lives of nanosecond isomeric states. However it should be remembered that states formed in (α, xn) reactions are highly aligned[6] and so it is possible to study the angular distribution as a function of time in the nanosecond region. In view of a large number of new isomers to be discovered we feel that the technique will thus be very powerful for studying the time dependence of the alignments of isomeric states in the presence of an extra-nuclear field. Such experiments are now in progress[7].

We would like to express thanks to Dr. F.S. Goulding and Mr. D.A. Landis for their valuable assistance with the electronic system.

References

1. T. Yamazaki and G.T. Ewan, Physics Letters 24B, 278 (1967).
T. Yamazaki, G.T. Ewan and S.G. Prussin, UCRL-17299, p. 78 (1967) and to be published.

2. S.D. Bloom, Nuclear Reactions, edited by P.M. Endt and P.B. Smith (North Holland Pub. Co., 1962) p. 1-41.

3. G.T. Ewan, R.L. Graham and I.K. McKensie, IEEE Trans. on Nucl. Science, NS-13, No. 3, 297 (1966).
J. Pigneret, J.J. Samueli, and A. Sarazin, IEEE Trans. on Nucl. Science, NS-13, No. 3, 306 (1966).
M.G. Strauss, R.N. Larsen and L.L. Sifter, IEEE Trans. on Nucl. Science, NS-13, No. 3, 265 (1966).

4. S. Gorni, G. Hochner, E. Nadav and H. Zmora, Nucl. Instr. and Methods, 53, 349 (1967).

5. S. Bjornholm, J. Borggren, H.J. Frahm and N.J. Sigurd Hansen, Nuclear Physics 73, 593 (1965).
A.L. McCarthy, B.L. Cohen, and L.H. Goldman, Phys. Rev. 137B, 250 (1965).

6. H. Ejiri, M. Ishihara, M. Sakai, K. Katori and T. Inamura, Physics Letters 18, 314 (1965).
C.F. Williamson and B.J. Shepherd, Bull. Am. Phys. Soc. 10, 428 (1965).
R.M. Diamond, E. Matthias, J.O. Newton and F.S. Stephens, Phys. Rev. Letters 16, 1205 (1966).

7. T. Yamazaki and E. Matthias, to be published.

T. Yamazaki, to be published in the Proceedings of the 1967 Enrico Fermi International Summer School.

T. Yamazaki, E. Matthias, S.G. Prussin, C.M. Lederer, J. Jaclevic and J.M. Hollander, contribution to the International Conference on Nuclear Structure (Tokyo, 1967).

Figure Captions

Figure 1. Simplified block diagram of electronic apparatus used in measurements of nanosecond isomeric states. A schematic time distribution is also shown. As only every second pulse from the cyclotron is used there are two prompt peaks separated by the period of the cyclotron r.f. oscillator.

Figure 2. Schematic diagram of experimental arrangement used at the Berkeley 88 in. cyclotron.

Figure 3. a) Part of the 256 channel (energy) x 16 channel (time) spectrum observed when a ^{208}Pb target is bombarded by 50 MeV α-particles.

b) Time distribution for 147 keV gamma-ray. 256 channels were used for time analysis and 16 channels for energy analysis. The time spectrum was obtained by setting a gate on the 147 keV peak and subtracting the contribution due to Compton events from higher energy gamma-rays.

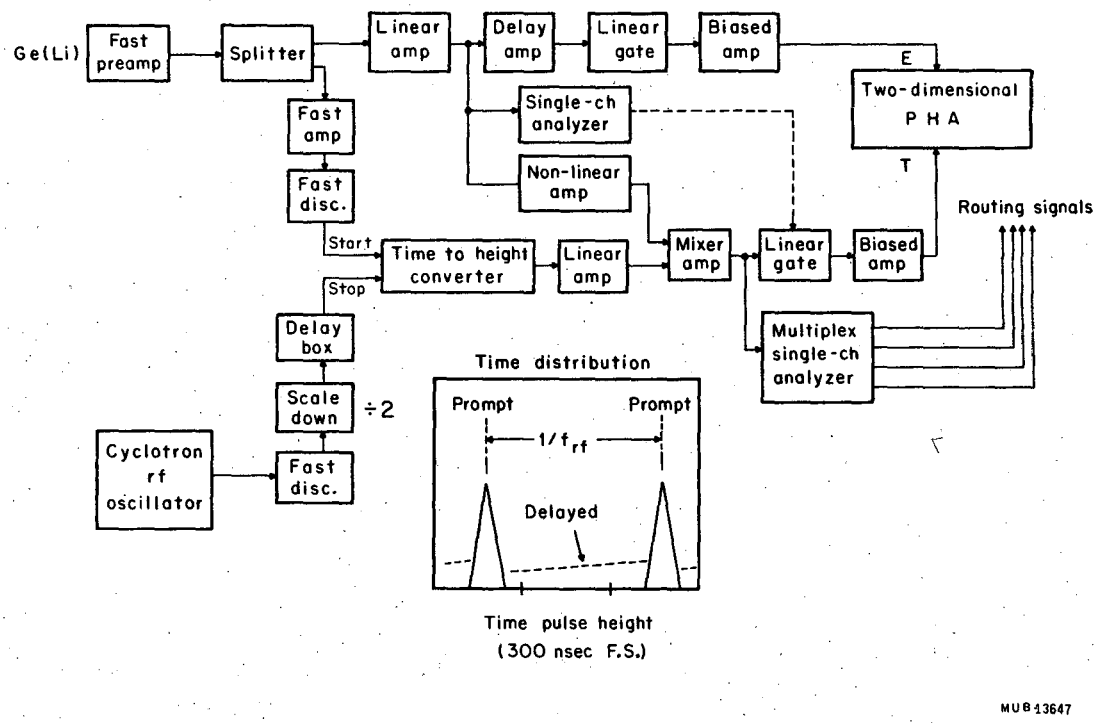
Ge(Li)
Fast preamp
Splitter
Linear amp
Delay amp
Linear gate
Biased amp
E
Two-dimensional P H A
T
Fast amp
Fast disc.
Single-ch analyzer
Non-linear amp
Routing signals
Start
Time to height converter
Linear amp
Mixer amp
Linear gate
Biased amp
Stop
Delay box
Multiplex single-ch analyzer
Time distribution
Scale down
÷2
Prompt
Prompt
1/f rf
Cyclotron rf oscillator
Fast disc.
Delayed
Time pulse height
(300 nsec F.S.)
MUB 13647

Fig. 1

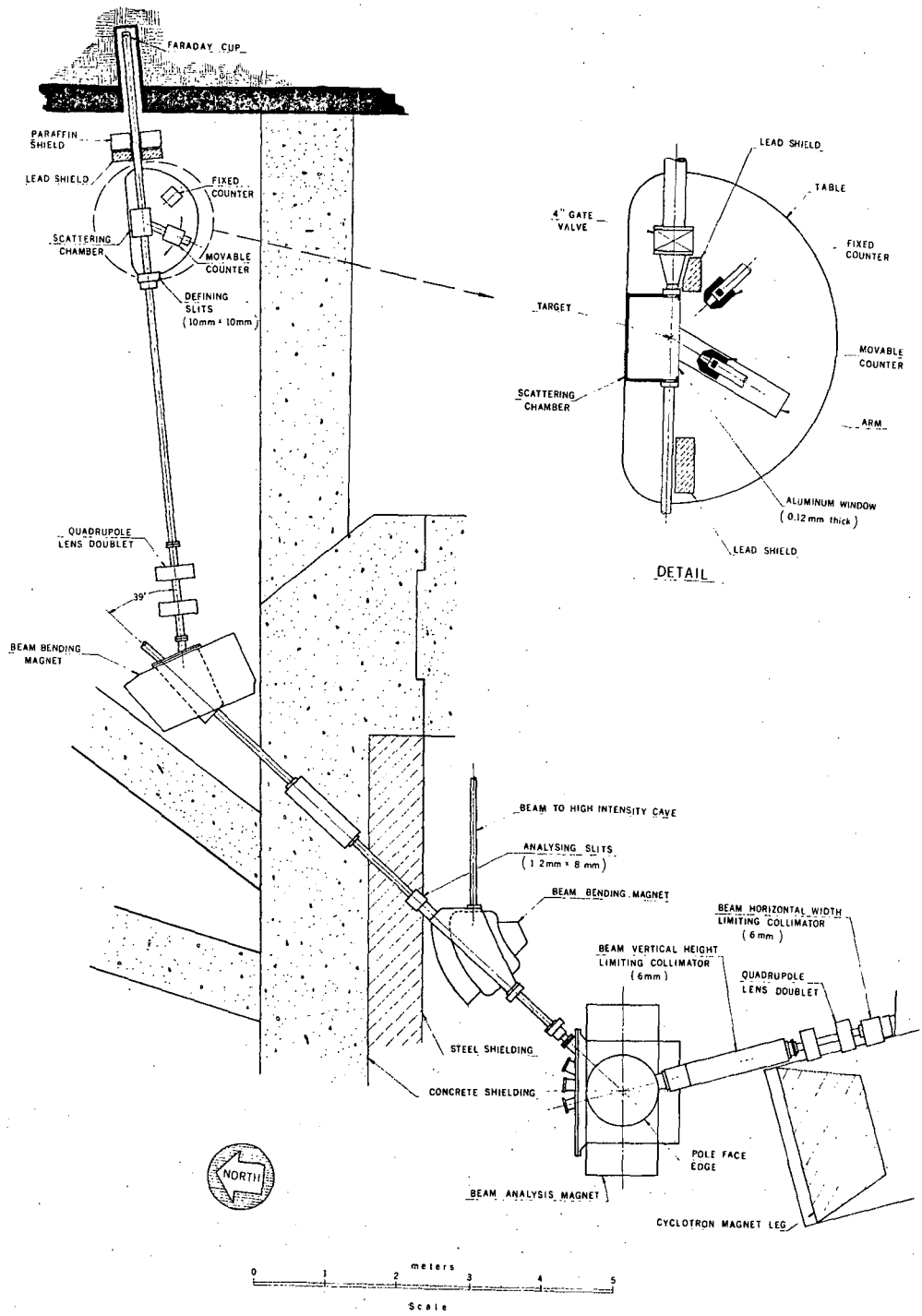

XBL 673-1318

Fig. 2

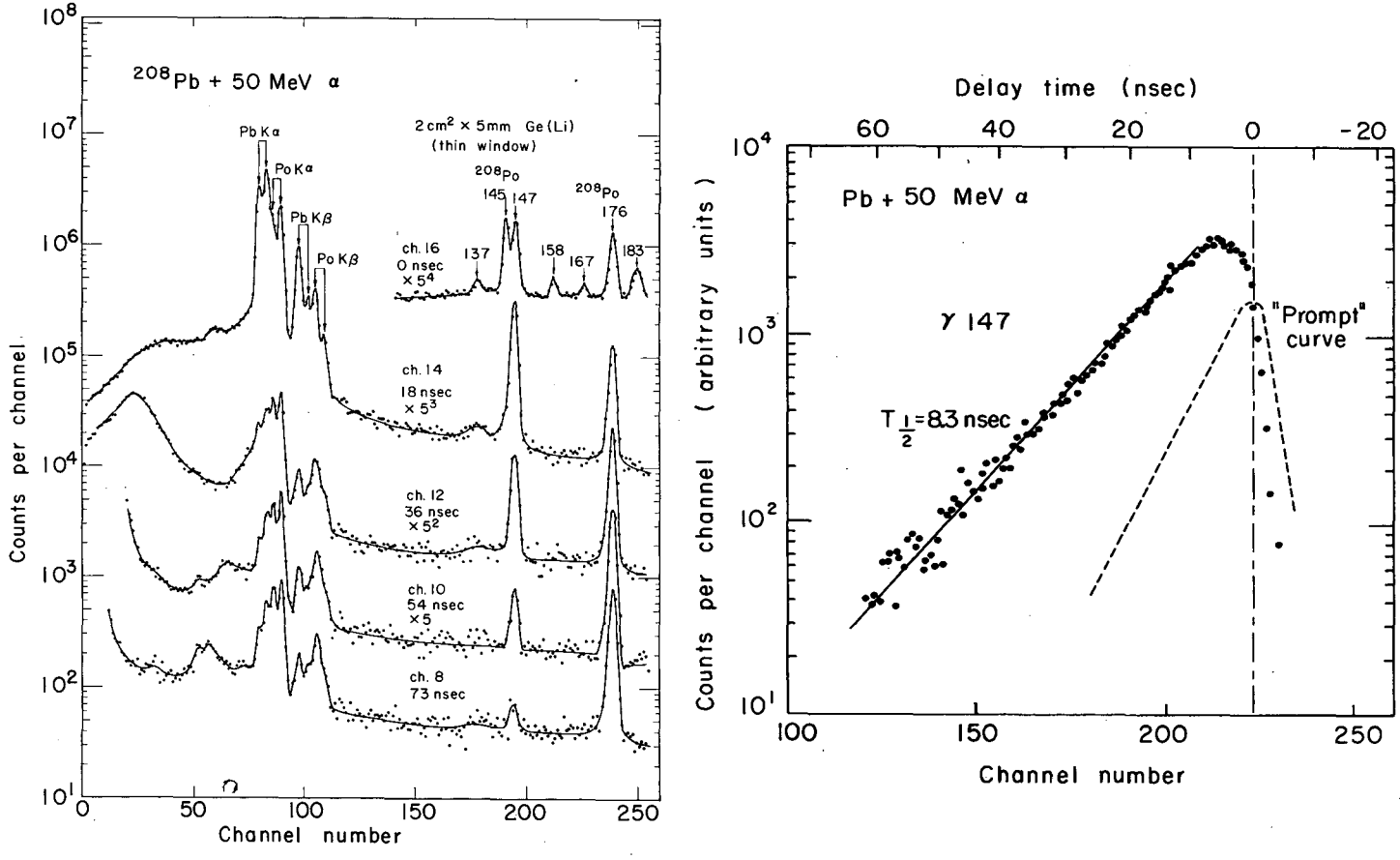

XBL 685-714

Fig. 3

This report was prepared as an account of Government sponsored work. Neither the United States, nor the Commission, nor any person acting on behalf of the Commission:

A. Makes any warranty or representation, expressed or implied, with respect to the accuracy, completeness, or usefulness of the information contained in this report, or that the use of any information, apparatus, method, or process disclosed in this report may not infringe privately owned rights; or

B. Assumes any liabilities with respect to the use of, or for damages resulting from the use of any information, apparatus, method, or process disclosed in this report.

As used in the above, "person acting on behalf of the Commission" includes any employee or contractor of the Commission, or employee of such contractor, to the extent that such employee or contractor of the Commission, or employee of such contractor prepares, disseminates, or provides access to, any information pursuant to his employment or contract with the Commission, or his employment with such contractor.