UCRL-18166

cy. 2

University of California

Ernest O. Lawrence Radiation Laboratory

RECEIVED
LAWRENCE
RADIATION LABORATORY
OCT 30 1968
LIBRARY AND
DOCUMENTS SECTION

TWO-WEEK LOAN COPY

This is a Library Circulating Copy which may be borrowed for two weeks. For a personal retention copy, call Tech. Info. Division, Ext. 5545

SYSTEM OF FAST INTEGRATED CIRCUIT LOGIC FOR PHYSICS INSTRUMENTATION

Frederick A. Kirsten and Dick A. Mack

September 1968

UCRL-18166
cy. 2

Berkeley, California

DISCLAIMER

This document was prepared as an account of work sponsored by the United States Government. While this document is believed to contain correct information, neither the United States Government nor any agency thereof, nor the Regents of the University of California, nor any of their employees, makes any warranty, express or implied, or assumes any legal responsibility for the accuracy, completeness, or usefulness of any information, apparatus, product, or process disclosed, or represents that its use would not infringe privately owned rights. Reference herein to any specific commercial product, process, or service by its trade name, trademark, manufacturer, or otherwise, does not necessarily constitute or imply its endorsement, recommendation, or favoring by the United States Government or any agency thereof, or the Regents of the University of California. The views and opinions of authors expressed herein do not necessarily state or reflect those of the United States Government or any agency thereof or the Regents of the University of California.

UCRL-18166
Preprint

Submitted to International Symposium on Nuclear Electronics,
Versailles, France, September 10-13, 1968

UNIVERSITY OF CALIFORNIA

Lawrence Radiation Laboratory
Berkeley, California

AEC Contract No. W-7405-eng-48

SYSTEM OF FAST INTEGRATED CIRCUIT LOGIC FOR PHYSICS INSTRUMENTATION

Frederick A. Kirsten and Dick A. Mack

July 29, 1968

System of Fast Integrated Circuit Logic for Physics Instrumentation*

Frederick A. Kirsten and Dick A. Mack

Lawrence Radiation Laboratory
University of California
Berkeley, California

July 29, 1968

ABSTRACT

Integrated circuits are finding an increasing number of applications as fast logic elements for high-energy physics experiments. Their high speed and low cost make them particularly attractive in large logic arrays involving many decision and storage elements, each having time resolutions of a few nanoseconds. A particularly important problem is to design a system of hardware for the integrated circuits that not only preserves their speed characteristics and provides flexibility of interconnections where necessary, but also preserves their great cost advantage when used to construct large systems of logic.

A particular approach to the hardware problem is described. Groups of integrated circuits are assembled onto logic cards to form the logic modules most useful for physics instrumentation. Fast input and output connections are made by means of an inexpensive transmission-line connector used in conjunction with a commercially available card-edge connector. Power-supply voltages are chosen to make all logic levels NIM compatible.

A particular example of a medium-scale logic array--a 36-channel hodoscope register--is given.

*Work done under the auspices of the U. S. Atomic Energy Commission.

INTRODUCTION

During the past several years, the speed capabilities of integrated circuits have steadily improved. This has made them increasingly attractive as fast-logic elements for nuclear instrumentation. This paper describes a hardware system designed to permit the use of presently available integrated circuits in High Energy Physics experiments. The family of integrated circuits that we are now using is the Motorola* MECL II series. These circuits have characteristic times --i.e., propagation delay, rise and fall times--of the order of 5 to 7 nsec. Logic systems built of these components exhibit long-term variations in propagation delay of the order of 1 nsec. The coincidence of two or more pulses can be detected if they overlap by more than 3 to 5 nsec. Although these circuits are slower than the fastest commercially available 100-to 200-MHz counting equipment, they are still sufficiently fast to permit their use in a wide range of applications. Fortunately, most of the larger instrumentation systems involving the processing of pulses from many channels can operate effectively with circuits having these characteristics. As faster integrated circuits are developed and introduced, their range of application will increase.

Another important characteristic of integrated circuits is the low cost of the individual components. However, in order for the logic components to be useable, they must be supported by peripheral hardware; means must be provided for physically supporting them, for supplying them with power, and for interconnecting them with other logic elements, with input transducers, or with the data-storing devices. The task of the designer is to provide the necessary hardware support in a useable and efficient form without losing the great cost-saving potential of the integrated circuits themselves. To illustrate the problem, the cost of providing a single coaxial connection via ordinary BNC connectors is at least twice the cost of a two-input coincidence gate. In designing the hardware described in this paper, we have attempted to achieve a system having the flexibility to make it useable for the general logic situation, and also the low cost to make it attractive for large-scale, single-purpose logic arrays such as hodoscope registers and coincidence matrices. These are mainly concerned with digital information. Systems concerned with the processing of analog information, such as multi-channel time-of-flight digitizers and pulse amplitude digitizers could also be accommodated.

LOGIC CARDS

It is usually true that the logic functions available in integrated-circuit

---

*Motorola Semiconductor Products, Inc., Phoenix, Arizona, U. S. A.

packages are not precisely the same as the logic modules that are most convenient for instrumentation work. In our system, the regrouping of integrated-circuit logic functions into modules is accomplished by means of printed-circuit cards of the type shown in Fig. 1. These cards are 11.4 cm wide and 5.5 cm in overall height. They are designed to plug into a 44-pin card-edge connector. They are physically compatible with the commercially available DTL/TTL logic cards from several vendors. This feature greatly facilitates the assembly of systems requiring both MECL and DTL/TTL logic. Indeed, the mounting hardware that we use (Figs. 4 and 5) is purchased from one of them. All input, output, and power connections are made via the card-edge connector.

The card in Fig. 1 contains four channels of the logic shown in Fig. 2. Each channel has a two input coincidence circuit having one data input and a strobe input common to all four channels. Each coincidence circuit is followed by a flip-flop which is "set" if a coincidence of input pulses is detected. The condition of the flip-flop may be read onto a common data bus via the AND gate labeled Gate 2 in the figure.

A second example is shown in Fig. 3. This card contains two discriminators. In this case the integrated circuits are enhanced by the liberal use of discrete components. The discriminators have a threshold which is adjustable over the range of 60 to 600 mV. The output pulse width is adjustable with a minimum width of 20 nsec. The maximum duty factor is 50%. The slewing from 10% above threshold to ten times threshold is about 5 nsec. Other circuit cards which have been designed include six-fold coincidence gates, fanouts, dual delay lines, etc. The list of possible designs is nearly inexhaustible.

INTERCONNECTIONS

Generally, both pulse and logic level signals must be transmitted to or from the cards. In the former the characteristics of the pulse which permit measurement of the times of arrival and durations of the signals must be preserved. The generation of spurious signals by reflections etc. must be avoided. The restrictions on the transmission of logic-level signals are much less severe. Such signals are generally associated with gating functions, or the transmission of data to recording devices or computers. Here, one is usually concerned only with preserving the positive identification of logic levels, and the inherent fanout specifications of the integrated circuits come into play. Discrete or printed wire connections are almost always permissible for signals of this class.

For pulse signals, interconnections between logic cards may be by means of discrete or printed wires if the distance to be traveled is less than about 4 to

6 inches. For greater distances, or if connections are to be made to the outside world, coaxial or parallel-wire transmission lines are used. Having all three of these wiring means available allows for much greater flexibility than is available with other hardware systems we are using.

Nineteen pins of each printed-circuit socket are reserved for nine transmission-line connections. Each connection called a "triad", uses three connector pins. The center of the three pins conducts the signal and the outer two are used for the ground returns. One ground pin is shared between two adjacent triad connections. All pulse (short rise-time) signals are transmitted or received over the triads, which may be assigned as input or output connections as required by the logic of the card.

Figure 1 shows the inexpensive triad connector that has been developed for this system. The card-edge connector used is of the Termi-Twist series made by AMP (Part No. 1-67031-0).* The exposed pins on this connector are 0.79- by 1.58-mm posts. The triad connector consists of a small chip of printed circuit material on which are mounted three contacts (AMP part No. 84593-2) which slip over three posts of the Termi-Twist connector. Used with 51-ohm transmission lines, the triad connector causes less than 2% reflections when tested with 1 nsec rise-time signals.

The terminating resistors for the transmission lines are mounted on the triad connectors rather than on the circuit cards. This makes the cards independent of the type of wiring used and of the impedance of transmission lines employed. One such termination, a 1/8 W, 51-ohm resistor, can be seen on the right-hand triad connection in Fig. 1. The short stub of printed wiring and the input capacity of the integrated circuit generate reflections that are of negligible amplitude.

LOGIC LEVELS

The logic levels of MECL II integrated circuits, normally -0.7 and -1.5V can be made compatible with the NIM standards by elevating the negative and positive power supply busses by 0.8V. The bus voltages thus become +0.8 and -4.4V. They are obtained from a floating 5.2V regulated power supply. A second, external regulator controls the positive terminal of the floating supply to be +0.8V: the negative terminal thus becomes -4.4V. The resulting logic levels are +0.1 and -0.7V.

MECL II output nodes can be made capable of driving 50-ohm loads by paralleling two or more of their emitter-follower outputs and adding an external

---

*AMP Incorporated, Harrisburg, Pennsylvania, U.S.A.

resistor from the output node to the -4.4V bus. The output impedance of the output emitter-followers results in a slight shift in logic levels, which now become approximately 0.0 and -0.8V. Each output so treated is capable of driving one 50-ohm terminated transmission line, two 100-ohm lines, or equivalent. If (unterminated) discrete wires are used, an output can drive six to ten other logic card inputs without undue distortion of the timing information.

LOGIC SYSTEMS

The logic cards can be applied in several ways. For example, they can be used to build customized, special-purpose logic systems. To facilitate this, mother cards which accept a number of card-edge connectors have been built. They are made of printed-circuit card material, and provide a good ground plane for the logic-card system as well as a physical support for the connectors. Interconnections are made entirely with triad transmission-line connectors and AMP Termi-Point discrete wire terminals. Small logic systems of 10 to 50 cards can be assembled very quickly. The slip-on triad connector allows an easy means of debugging or changing the logic system.

LARGER SYSTEMS

The cards can also be used to construct large arrays of special-purpose logic. There are several examples of these--e.g., hodoscope registers and coincidence matrices--that have a fixed configuration and are useful in instrumenting more than one experiment. For these, it is feasible to design mother cards having much of the interconnecting wiring printed directly upon them. Pulse signals can be transmitted over printed wires of several inches in length without degradation of the speed of the system.

Figures 4 and 5 are photographs of a 36-channel hodoscope register unit. Each identical channel has the following components: discriminator, 75-nsec delay line, strobed coincidence, flip-flop register, and data-bus gate. Three printed mother cards are used. Each supports the logic cards for 12 complete channels, and contains most of the interconnecting wiring. Other cards have the logic for controlling the reading of the flip-flops onto the data bus, logic for the internal testing routines, and the 0.8V regulator.

SELF-TESTING AND EXTERNAL CONTROL FEATURES

The confidence of a user in a large logic system is measurably increased if he is provided a built-in facility for testing and verifying the proper operation of the system. The same facility also reduces the initial debugging time and aids

in proper adjustment of the system. It is expected that, in the future, it will become increasingly necessary to provide means of testing and controlling the logic arrays by external signals, possibly from a computer. This is partly necessary because, as the systems become larger, the operational monitoring becomes more tedious.

Some of these features have been built into the 36-channel hodoscope register system. Each discriminator has a test input in parallel with its signal input. During testing, pulses of the same amplitude may be applied to all 36 discriminators in unison. The amplitude of the pulses may be controlled manually or by computer. In the latter case, the thresholds of all 36 discriminators may be measured by the computer, and the proper timing of the entire system verified. Visual monitoring of the testing or data-taking operations of the system is permitted by the 12 lights on the front panel (see Fig. 4). A separate 12-bit register stores and displays the data accumulated by any group of 12 flip-flop registers. These data may be from a real event or from a test sequence.

FUTURE DEVELOPMENTS

Design and construction of several other logic systems using these logic cards is under way. In some cases, the method of hardware construction will be modified to better fit the application. As faster integrated circuits become available, they will be used.

Work is also proceeding on the design of a second generation of hardware, in which complete external control of the actual logic interconnections is being studied. Means of employing printed transmission lines are being developed.

ACKNOWLEDGMENT

We appreciate the discussions with J. Brisson during the early part of this work.

CAPTIONS

Fig. 1. Typical logic card. The logic of this, the quad coincidence-resistor card, is in Fig. 2. Three triad transmission-line connectors are shown. The one in the center, connected to the card-edge connector, has a terminating resistor.

Fig. 2. The logic card in Fig. 1 has four channels of the logic shown here. A single integrated circuit package, the Motorola MC1011P, is used for each channel. The MC1011P contains four two-input gates. Gates 1 and 2 have no internal pull-down resistors on their output emitter followers. This causes a pulse-stretching effect at the output of the coincidence gate (Gate 1) and results in increased sensitivity to input pulse overlap. The omission of the pull-down resistor on Gate 2 gives a higher fan-in capability on the data bus.

Fig. 3. This card contains two fast discriminators. The four screwdriver adjustable potentiometers at the top are separate threshold and output pulse-length adjustments for the two channels.

Fig. 4. The 36-channel hodoscope register system, with a few of the logic cards in place. The three logic card files are hinged on the left to permit easy access to the wiring on the underside.

Fig. 5. Underside of the 36-channel hodoscope register, showing the three identical mother cards. Note that the 36 input signals are brought in via multiple-conductor coas connectors on the rear panel.

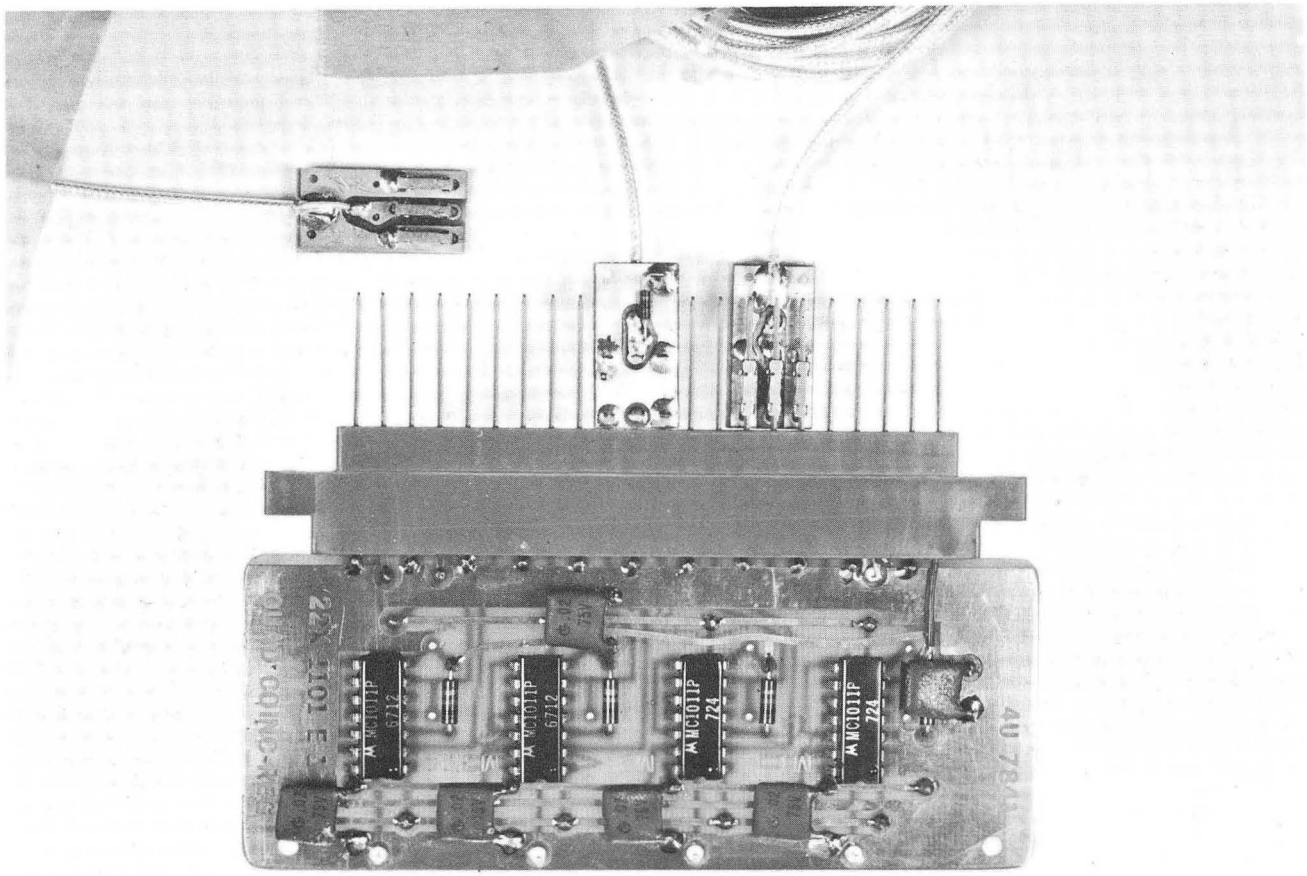

CBB 687-4574

Fig. 1.

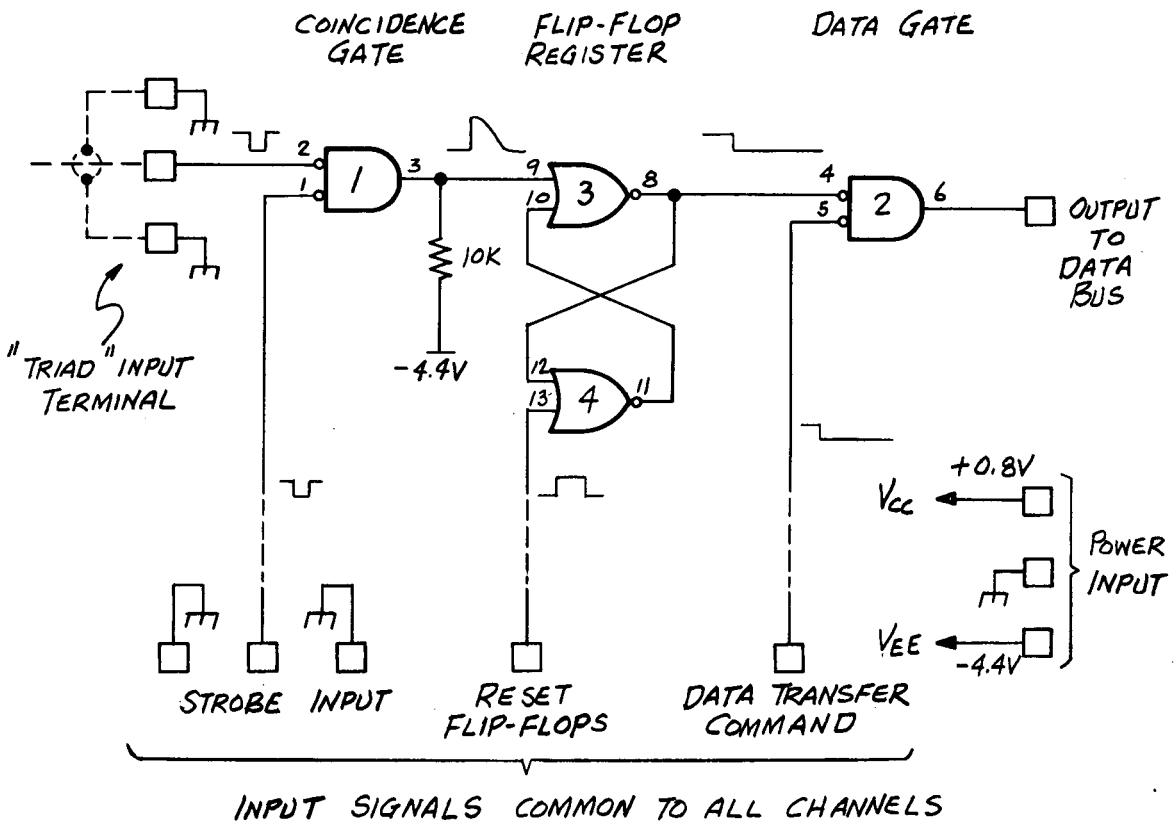

Fig. 2.

XBL 687-1387

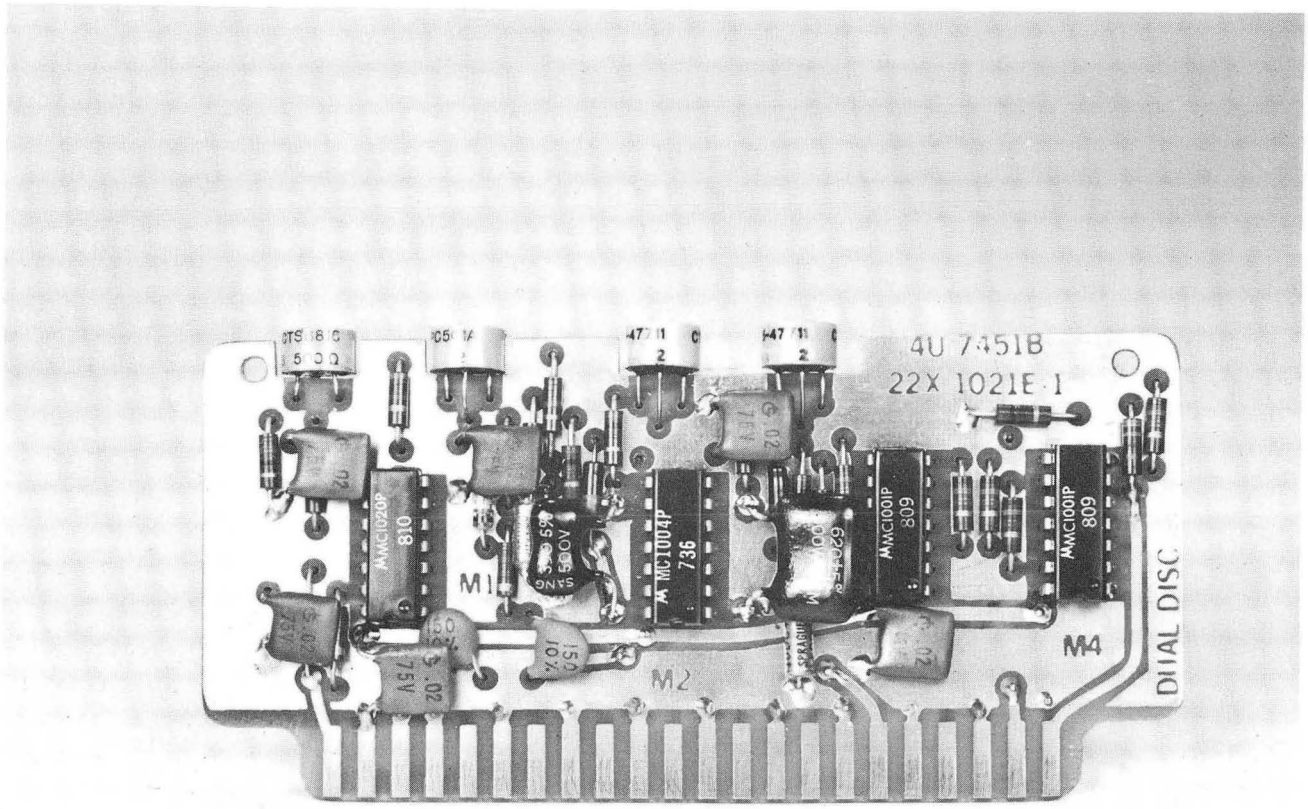

CBB 687-4572

Fig. 3.

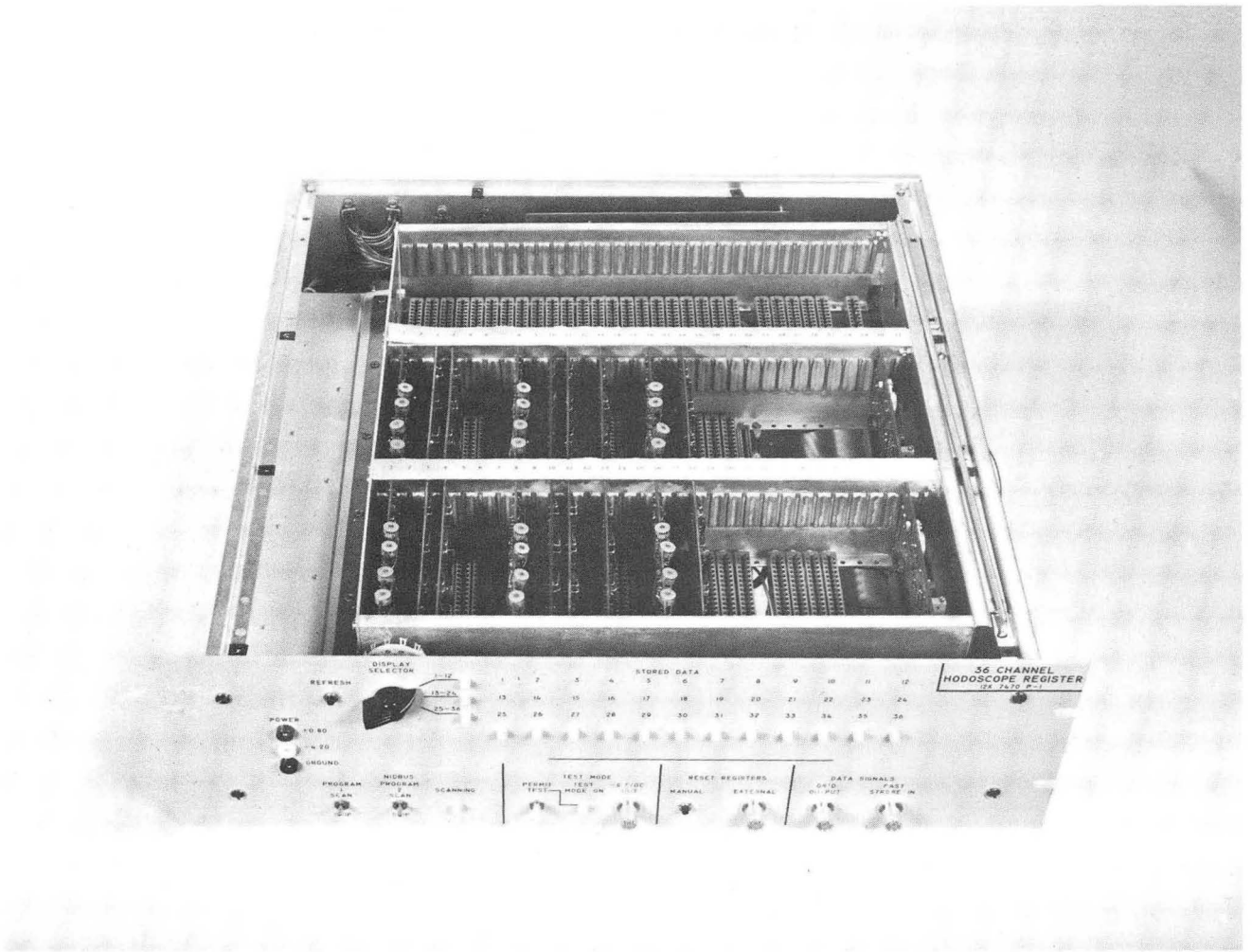

XBB 687-4056

Fig. 4.

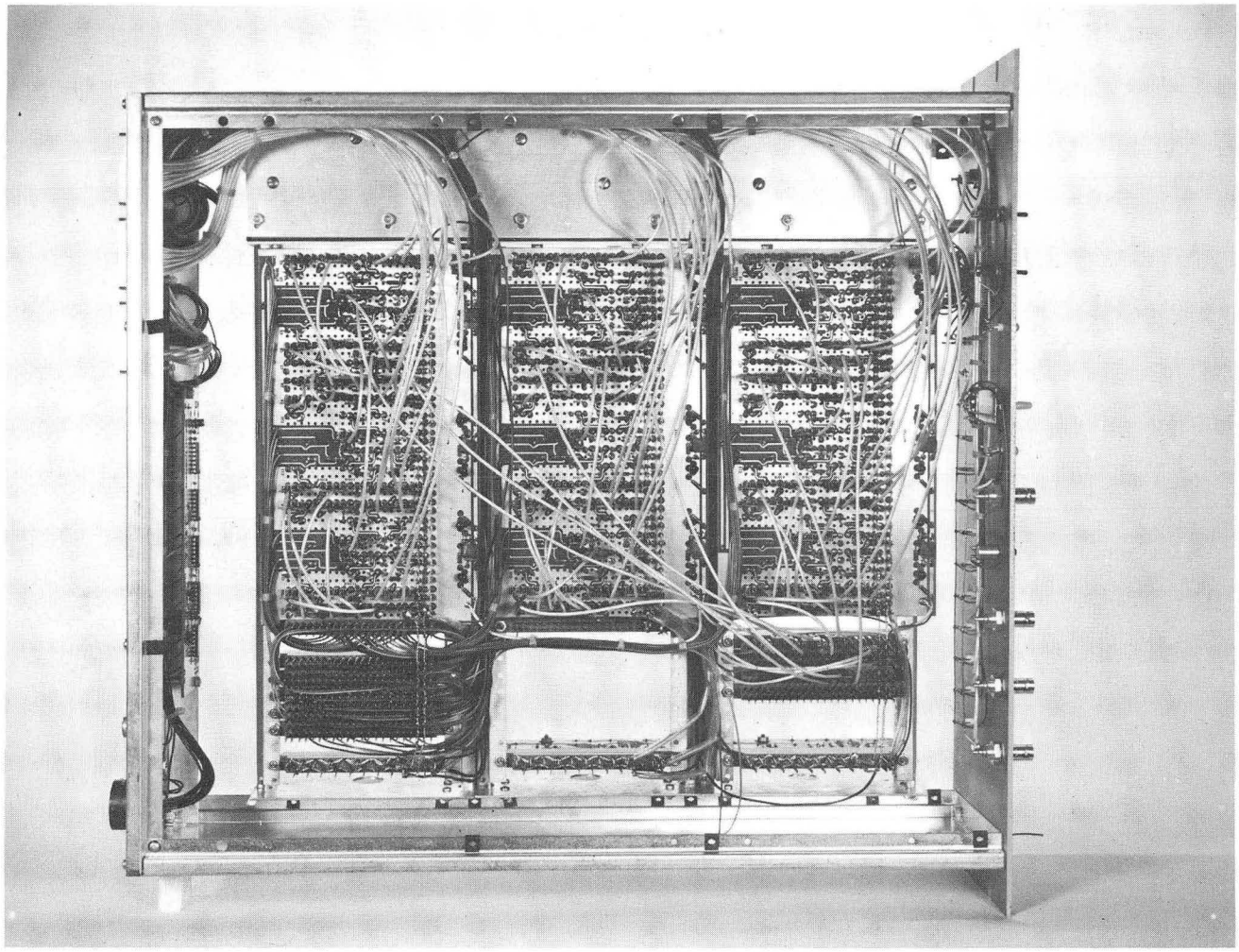

XBB 687-4057

Fig. 5.

This report was prepared as an account of Government sponsored work. Neither the United States, nor the Commission, nor any person acting on behalf of the Commission:

A. Makes any warranty or representation, expressed or implied, with respect to the accuracy, completeness, or usefulness of the information contained in this report, or that the use of any information, apparatus, method, or process disclosed in this report may not infringe privately owned rights; or

B. Assumes any liabilities with respect to the use of, or for damages resulting from the use of any information, apparatus, method, or process disclosed in this report.

As used in the above, "person acting on behalf of the Commission" includes any employee or contractor of the Commission, or employee of such contractor, to the extent that such employee or contractor of the Commission, or employee of such contractor prepares, disseminates, or provides access to, any information pursuant to his employment or contract with the Commission, or his employment with such contractor.