UCRL 181 ~~Cy 77~~ A

UNIVERSITY OF CALIFORNIA

Radiation Laboratory

TWO-WEEK LOAN COPY

This is a Library Circulating Copy which may be borrowed for two weeks. For a personal retention copy, call Tech. Info. Division, Ext. 5545

BERKELEY, CALIFORNIA

UCRL-181 c.2

DISCLAIMER

This document was prepared as an account of work sponsored by the United States Government. While this document is believed to contain correct information, neither the United States Government nor any agency thereof, nor the Regents of the University of California, nor any of their employees, makes any warranty, express or implied, or assumes any legal responsibility for the accuracy, completeness, or usefulness of any information, apparatus, product, or process disclosed, or represents that its use would not infringe privately owned rights. Reference herein to any specific commercial product, process, or service by its trade name, trademark, manufacturer, or otherwise, does not necessarily constitute or imply its endorsement, recommendation, or favoring by the United States Government or any agency thereof, or the Regents of the University of California. The views and opinions of authors expressed herein do not necessarily state or reflect those of the United States Government or any agency thereof or the Regents of the University of California.

UNIVERSITY OF CALIFORNIA
RADIATION LABORATORY

Cover Sheet
Do not remove

UNCLASSIFIED

INDEX NO. UCRL-181
This document contains 10 pages
and 6 plates of figures.
This is copy 77 of 84. Series A

Issued to: Info Div

~~RESTRICTED~~

Classification

Each person who received this document must sign the cover sheet in the space below.

Route to	Noted by	Date	Route to	Noted by	Date

R-41

UCRL 181
Physics-General

RESTRICTED

UNCLASSIFIED

UNIVERSITY OF CALIFORNIA

Radiation Laboratory

SUMMARY OF THE RESEARCH PROGRESS MEETING

September 9, 1948

R. K. Wakerling

Special Review of Declassified Reports
Authorized by USDOE JK Bratton
Unclassified TWX P182206Z May 79

REPORT PROPERLY DECLASSIFIED

J N Green 8/16/79
Authorized Derivative Classifier Date
R W Hunt 8/17/79
By Date

Berkeley, California

UCRL 181
Physics-General

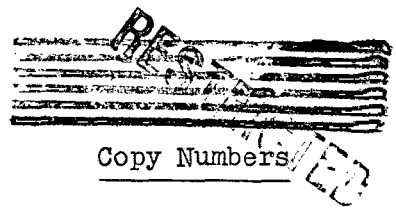

STANDARD DISTRIBUTION: Series A

	Copy Numbers
Argonne National Laboratory	1-8
Armed Forces Special Weapons Project	9
Atomic Energy Commission, Washington	10-11
Battelle Memorial Institute	12
Brookhaven National Laboratories	13-20
Carbide & Carbon Chemicals Corporation (K-25 Area)	21-24
Carbide & Carbon Chemicals Corporation (Y-12 Area)	25-28
Columbia University (Dunning)	29
General Electric Company	30-33
Hanford Directed Operations	34-38
Iowa State College	39
Los Alamos	40-42
Monsanto Chemical Company, Dayton	43-44
National Bureau of Standards	45-46
Naval Radiological Defense Laboratory	47
NEPA	48
New York Directed Operations	49-50
Oak Ridge National Laboratory	51-58
Patent Advisor, Washington	59
Technical Information Division, ORDO	60-74
UCLA Medical Research Laboratory (Warren)	75
University of California, Radiation Laboratory	
Information Division	76-78
Chemistry, Bldg 5	79
Patent Department	80
University of Rochester	81-82
Chicago Office of Directed Operations	83
Navy Department Bureau of Ships	84

INFORMATION DIVISION
Radiation Laboratory
Univ. of California
Berkeley, California

SUMMARY OF THE RESEARCH PROGRESS MEETING

September 9, 1948

R. K. Wakerling

The Bevatron. W. Brobeck. A review was given of the present design status of the bevatron to be constructed in this Laboratory. The design of the magnet has been decided upon and an order placed for 9,000 tons of steel with delivery probably late next summer. The cross section of the magnet is shown in Figures 1 and 2 for the two positions of the coil windings. It is the present intention to wind the coils first in the position shown in Figure 1 without pole pieces so that the entire gap may be used. This should give protons of energy 1.5 Bev. If it is found that this arrangement will operate satisfactorily and that the problems of injection and acceleration of the beam can be solved, the inner coil will be re-wound in the position shown in Figure 2 and the pole pieces put in place. With this arrangement it should be possible to achieve a proton beam of energy somewhat in excess of 6 Bev. In both of these plans the protons will be injected at an energy of 4 Mev. The building to house the instrument is shown in cross section in Figure 3.

It is the present intention to build a quarter-size working model of the instrument in the form shown in Figure 1. The object in developing the model is to show that the protons can be injected and accelerated in such a machine and that stable orbits exist. It is expected that construction of the model will start in about one month and that it will be ready and operating by the coming April. Protons will be injected at 1/2 Mev and accelerated to about 6 Mev. It is estimated that with a vacuum of about 10^{-5} mm mercury 1-1/2 percent of the beam will get through in the model. In the large machine itself it is expected that a vacuum somewhat better than this will be obtainable, and with the larger

aperture of Figure 1,10 percent of the beam is expected to be lost while with the small aperture 60 percent will probably be lost.

The large magnet will require a peak power of 100,000 kw and will operate at 100 pulses per minute. It now appears that the Westinghouse Company will probably build this power supply. The magnet will be operated by two motor generator sets with 85 ton flywheels powered by 3600 horsepower motors. The magnet energy is stored each cycle as mechanical energy in the flywheels. A current reversing system will be employed making use of 48 ignitron tubes 15 in. in diameter and 2 ft. high. The magnet will be pulsed in such a way that the pulses will have a duration of 3 seconds with an interval of 1 second between them. During the pulse the magnet voltage will decrease from a maximum of 18 kv to 12 kv just before current reversal.

Present plans call for the vacuum chamber of the model to be constructed of stainless steel 1/32 in. thick, made in a number of flanged sections that may be bolted together. The eddy current losses in this material should be negligible, and it will have the necessary flexibility requisite for proper installation. The vacuum load is supported by ties between the flanges of the chamber and the magnet itself. Bids have been invited for the construction of 72 of these sections. At present consideration is being given to this mode of construction for the vacuum chamber of the large instrument. The large instrument will employ six 32 in. diffusion pumps in each of the openings between the magnet sections. A liquid air trap will be employed which runs around the entire vacuum chamber. This same scheme will be used on the model.

The decision as to whether to use a cyclotron or a Van de Graaff accelerator for injecting the particles at 4 Mev will be postponed until after the model tests have been made. In the bevatron drift tube acceleration will be used involving a

voltage of 8,000 volts peak with a frequency varying from .25 to 2.5 mc. The drift tube will be approximately 10 ft. long. This mode of acceleration is possible with the use of the saturable reactors developed by William Baker in the Laboratory. The frequency tolerances at injection for the small aperture is .2 percent with a tolerance of 3 percent at the end of the acceleration for the 10 percent loss in the beam.

Appended to this report is a set of specifications for the bevatron as now envisioned.

The Ratio of Meson Masses. C. Lattes. Experiments are now in progress to determine the mass of the heavy negative mesons with greater accuracy than that given by earlier determinations, and to measure the ratio of masses of heavy and light mesons. For the first problem a new plate holder has been built with a channel that admits negative mesons from the target at angles up to $\pm 10^{\circ}$ from the beam direction. This plate holder is shown schematically in Figure 4. With this arrangement it is possible to expose the plates without the usual black paper wrapping, making a more accurate range measurement feasible. Further, for mesons that leave the target at angles close to the beam direction the angular measurement of the tracks on the plate is most accurate and the effect of the lack of uniformity of the magnetic field is easy to calculate. Another refinement is the use of a target only 1/32 in. wide perpendicular to the beam.

The calculation of the absolute value of the mass depends on the value of the magnetic field in the vicinity of the target, and this has not been measured recently. Plans are now under way to conduct a measurement of the magnetic field which will be correct to within 1 percent. After this is done it will be possible to give a more accurate value of the meson mass. With the channel plate holder more than one hundred heavy negative mesons have been observed. In the same plate only one light meson has been found. When the mesons are not restricted

by the channel the ratio of light to heavy mesons is much greater. This is taken as an indication that the light mesons do not come directly from the target.

For the experiments on the ratio of meson masses a plate holder of the type shown schematically in Figure 5 is used. This plate holder has two channels so arranged that light positive mesons as well as heavy negative ones may be received simultaneously. The uncertainties mentioned above in the magnetic field do not affect this measurement, because the magnetic field cancels out in the calculation of the ratio of the masses. The present experiment measures the ratio of the masses of heavy negative to light positive mesons. In an earlier experiment the masses of heavy negative and heavy positive mesons were found to be the same within experimental error.

An object of the present experiment is to discover whether the ratio of masses of light and heavy mesons is consistent with the assumption that a light particle such as a neutrino is given off when a heavy meson decays to give a light one. A ratio of masses which fits this assumption is 1.32 ± 0.04. Thus far in the experiment only two light positive mesons have been found that stop in the emulsion. Some heavy negative mesons have been found on the same plates. The masses of the light mesons are 2.09 and 2.11 electron masses while the mass of the heavy ones is 286 m_e. In order to get a result for the ratio of heavy mesons to light, the measurements of the two light positive mesons have been combined with the measurements of the masses of heavy negative mesons made earlier in the same magnetic field. This gives a ratio of 1.36. Of course these results are very preliminary, and it is hoped that in a short while a ratio based on considerably more data may be given.

<u>Anthracene Crystals. J. Alley.</u> As a result of the large amount of interest displayed in solid counters employing anthracene and naphthalene, it has become

necessary to develop a technique for growing large anthracene crystals. A method which gives satisfactory results is based upon cooling melted anthracene placed in a sealed flask or tube which has been drawn into a thin capillary at one end as illustrated in Figure 6. In order to get the crystals to grow, directional cooling of the tube is required. To achieve this the tube is surrounded by three layers of heat shielding except at one end. Around the outside of the shielding heating coils are placed. After the anthracene is melted (the melting point is 217°) it is allowed to cool at the rate of 1 to 2 degrees per hour. It is not known if this is the optimum rate of cooling, but it is one that produces large crystals, and the demand for the crystals has been so great that there has not been an opportunity to experiment with the rate of cooling. It takes about five days to produce crystals.

It is found that the anthracene has to be purified before it can be used. A reflux still employing alcohol and benzene is used for purification.

The crystals are rather easily fractured, but no problem has been encountered in removing them from the flask. The planes of cleavage of crystals grown in this fashion remain vertical. It would be more convenient if they could be grown so as to have the planes of cleavage horizontal. Experiments to achieve this result are planned. The crystals can be easily sawed into the desired shapes under water and the surfaces can be polished with a cloth dampened in benzene. After they are prepared in their final shape they are ordinarily coated with a thin plastic film to prevent oxidation. Crystals treated in this way seem to have an indefinite lifetime.

Bevatron Design Sepecifications

(Revised for "n" = 0.6)

		1/4 Scale Model	Initial Stage	Later Stage
Nominal aperture inside vacuum tube	Ft.	1 x 3-1/2	4 x 14	1 x 4
Radius to center of tube	Ft.	11-1/2	46	50
Length of straight sections	Ft.	5	20	20
Length of orbit	Ft.	92.4	369	394
Maximum magnetic field	gauss	1000	5300	16,000
Maximum proton energy	Bev	.0059	1.48	6.44
Magnet gap	inches	13-1/2	54	14
Injection energy	Mev	0.50	4	4
Injection radio frequency	mc/sec	.35	0.260	0.230
Maximum radio frequency	mc/sec	1.19	2.60	2.61
Frequency ratio		3.4	10.0	11.3
Injection field	gauss	291	206	190
Useful width of field at injection ($1/2 < n < 1$)	inches	36"	144 (est.)	48
Relative radial width	% of radius	26	26	8
Relative height of aperture	% of radius	8-1/2	8-1/2	2
Acceleration time	secs	0.3	1.5	1.85
Initial rate of rise of field	KG/sec	4.45	4.45	9.60
Final rate of rise of field	KG/sec		2.44	5.90
Magnetic field exponent "n"		0.60	0.60	0.60
Initial energy gain per turn	ev	43.5	700	1750
Final energy gain per turn	ev		385	1075
Initial rate of change of frequency with field	Mc/KGsec		1.249	1.264
Initial rate of change of frequency with time	mc/sec^2		5.55	12.1
Injection time (time for beam to cross half width of useful field)	microsec	3400	2415	318

		1/4 Scale Model	Initial Stage	Later Stage
Turns during injection time		1330	627	74
Radial motion per turn during injection (RF off)	inches	0.014	0.12	0.32
Scattering loss at 10^{-5} mm air pressure	percent	98.4	12	57
Distance between accelerating gaps	ft.	2-1/2	10	10
Electrical angle between accelerating gaps	degrees	9.8	9.8	9.0
Peak accelerating electrode voltage		510	8200	22,300
Repetition rate at full energy	pulses per min.		10	10
Stored energy in magnetic field(approx.)	megajoules	.040	80	80
Peak magnet current	amps	1780	8333	8333
Number of series turns on magnet		16	88	88
Peak ampere turns		28,500	732,000	732,000
Initial voltage on magnet	volts	205	18,000	18,000
Voltage at maximum current	volts		12,000	12,000
Peak instantaneous power	megawatts		100	100
Allowable time average dissipation in magnet	KW	30	3500	3500
Conductor weight	tons	5	360	351
Conductor cross section	sq. in.	0.273	1.31	1.31
Number of conductors in parallel		2	2	2
Conductor length	ft.	6360	139,800	136,800
Coil resistance at 65 C-98% conductivity	ohms	.053*	0.268	0.262
Initial inductance	henrys	.026	3.6	
IR drop at maximum current	volts	94	2230	

* At 50 C

	1/4 Scale Model	Initial Stage	Later Stage
RF cycles per phase oscillation			
At injection	236	167	105
At maximum energy	- -	2010	2140
RF cycles per betatron oscillation			
Vertical	1.14	1.14	1.15
Horizontal	1.40	1.40	1.41
Damping of Radial Amplitude of Phase Oscillations			
Field for 1/2 initial amplitude - gauss	- -	412	380
" " 1/4 " " "	- -	824	760
" " 1/8 " " "	- -	1650	1520
" " 1/16 " " "	- -	3500	3300
Amplitude at final energy/initial amplitude	0.29	0.044	0.017
Damping of Betatron Oscillations			
Field for 1/2 initial amplitude - gauss	- -	824	760
" " 1/4 " " "	- -	3300	3040
" " 1/8 " " "	- -	- -	12,200
Amplitude at final energy/initial amplitude	0.54	0.198	0.109
Distance traveled during acceleration miles	15,000	200,000	305,000
Number of revolutions during acceleration x 10^6	.86	2.9	4.1
Frequency tolerance at injection			
for 100% loss %	4.9	4.9	1.6
for 10% loss %	0.49	0.49	0.16
Frequency tolerance at final energy			
for 100% loss %	4.9	9.4	3.2
form 10% loss %	2.5	7.8	2.9
Maximum deuteron energy Bev	0.0029	1.05	5.71
Maximum alpha particle energy Bev	0.0059	2.09	11.4

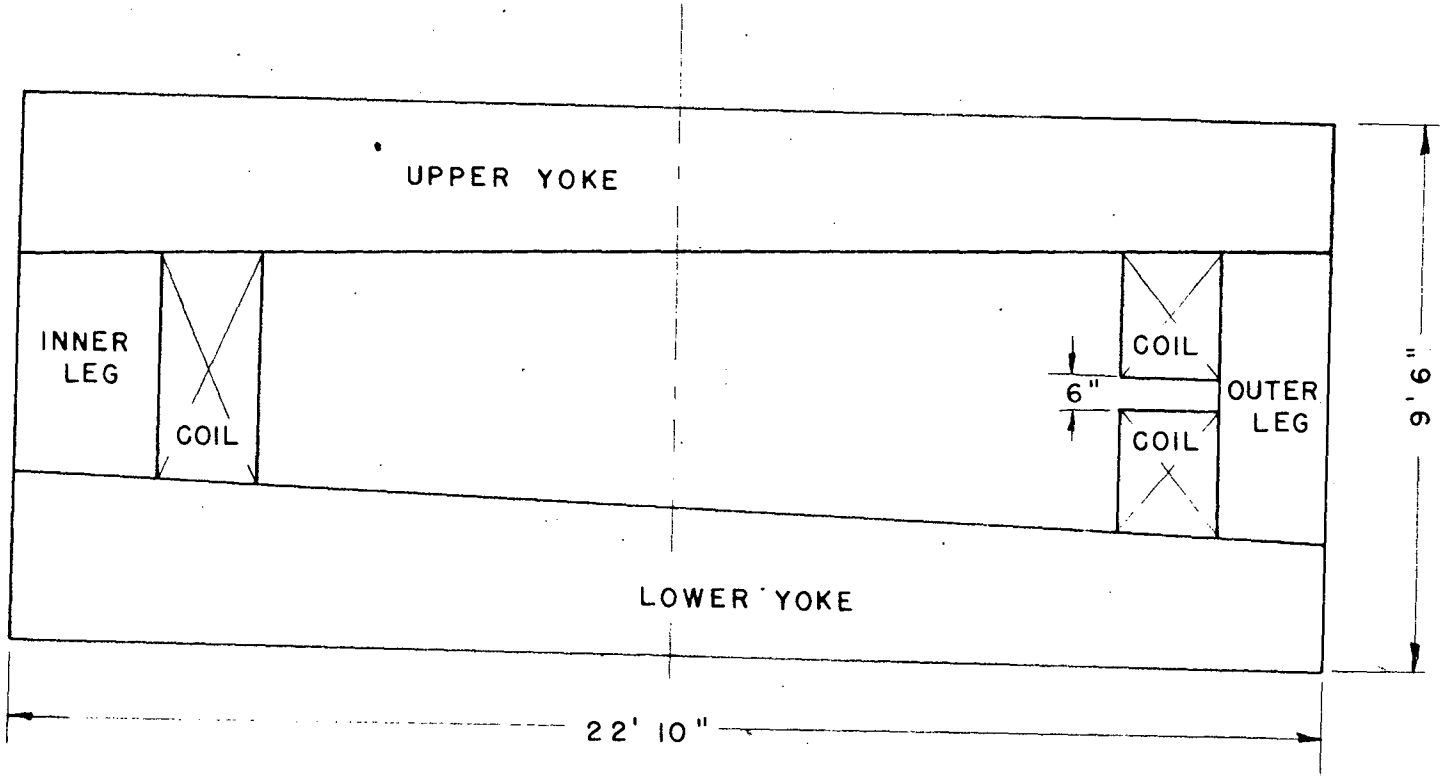
UPPER YOKE
INNER LEG
COIL
COIL
6"
COIL
OUTER LEG
9' 6"
LOWER YOKE
22' 10"

FIG. 1

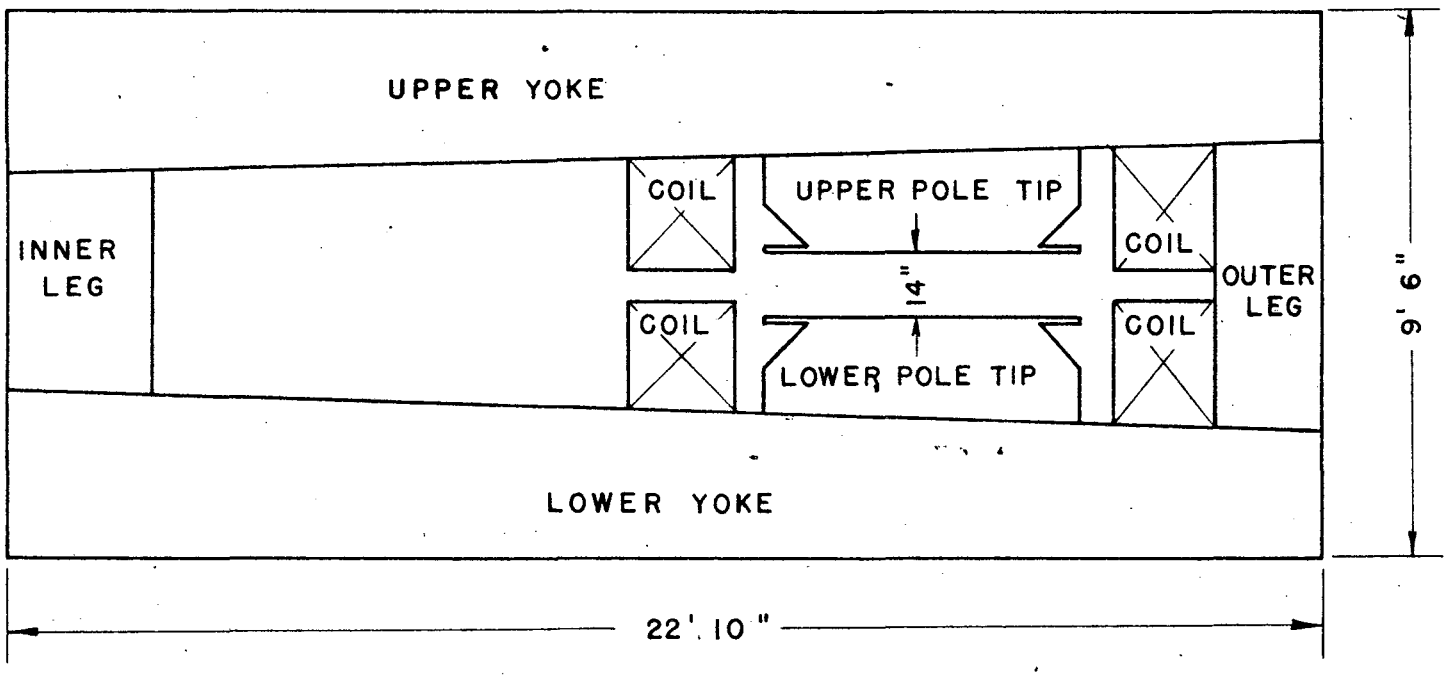
UPPER YOKE
INNER LEG
COIL
UPPER POLE TIP
COIL
14"
COIL
LOWER POLE TIP
COIL
OUTER LEG
LOWER YOKE
9' 6"
22' 10"

FIG. 2

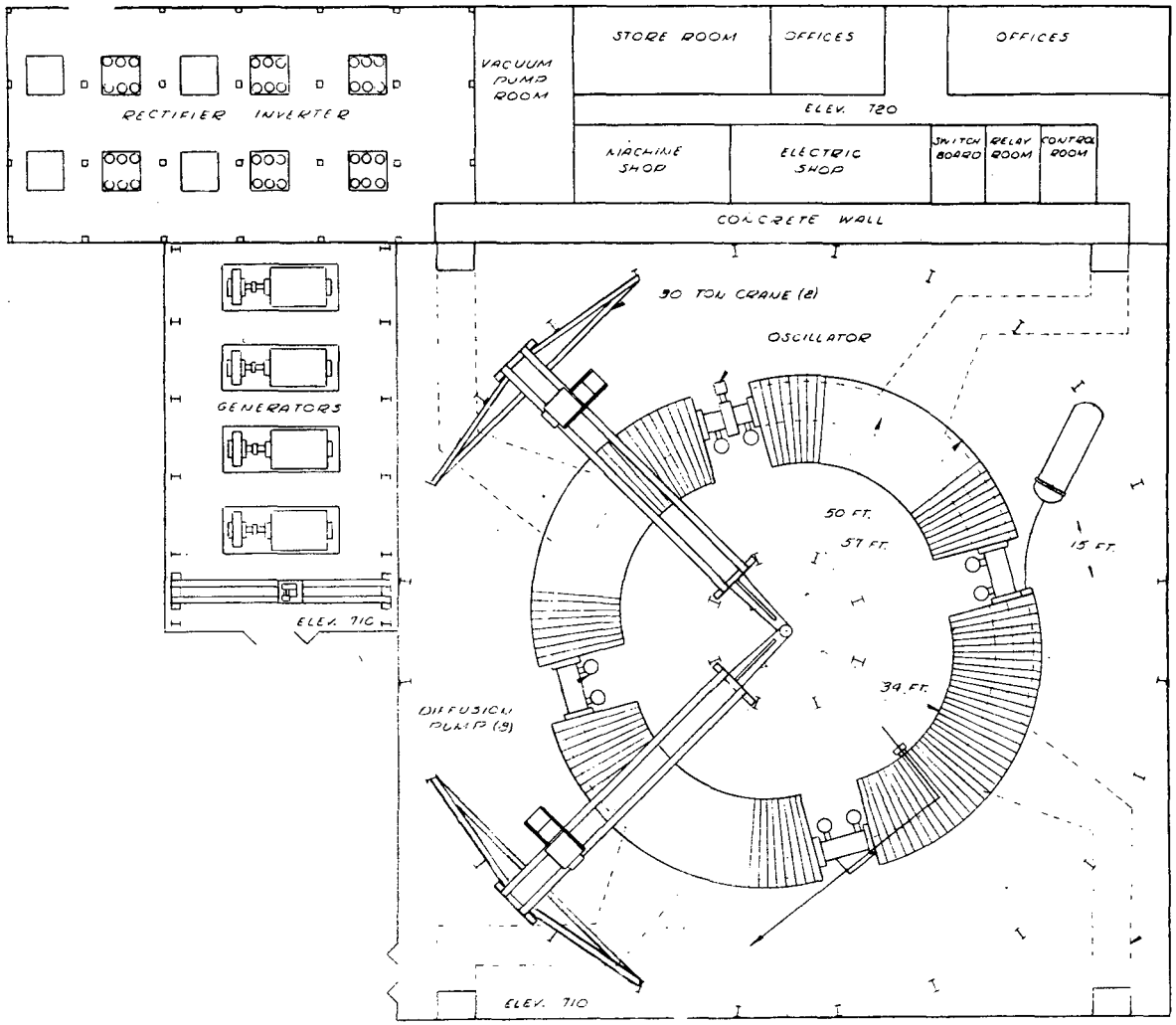

FLOOR AREA - GROSS SQUARE FEET

MAGNET ROOM	200 X 200	40,000
GENERATOR ROOM	60 X 100	6,000
RECTIFIER ROOM	60 X 120	7,200
SHOPS, OFFICES, ETC.	50 X 180	9,000
SHIELDING	10 X 180	1,800
		64,000

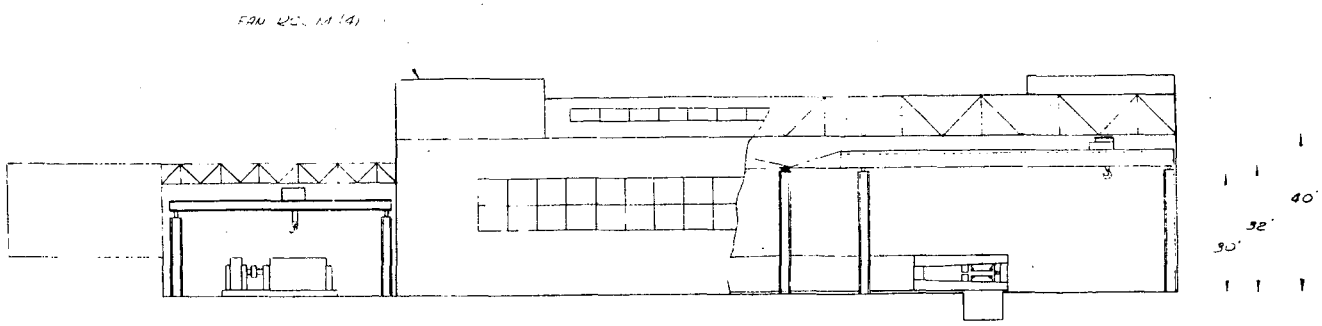

BEVATRON
STUDY NO. 6

FIG. 3

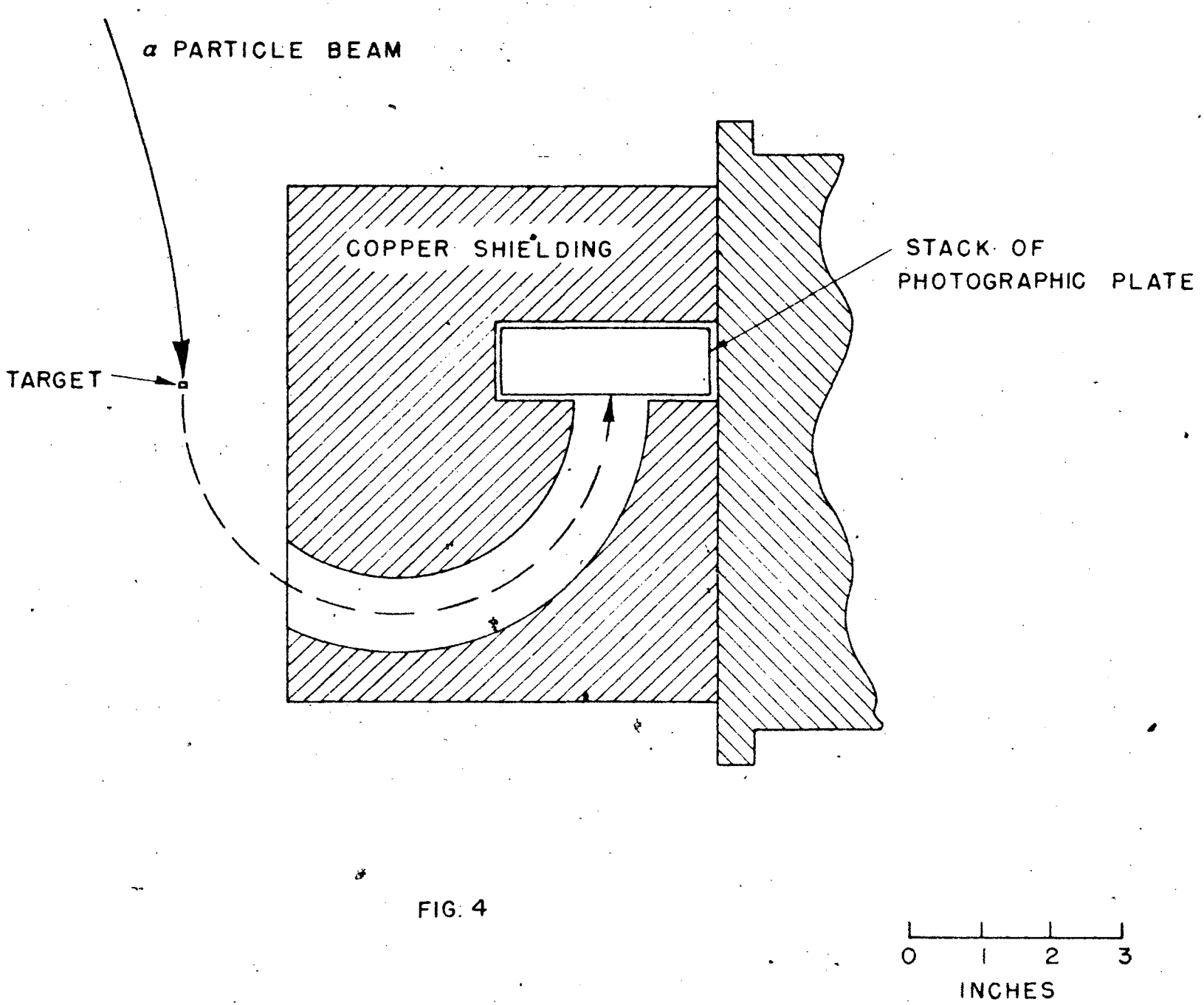
α PARTICLE BEAM
COPPER SHIELDING
STACK OF
PHOTOGRAPHIC PLATE
TARGET
0 1 2 3
INCHES

FIG. 4

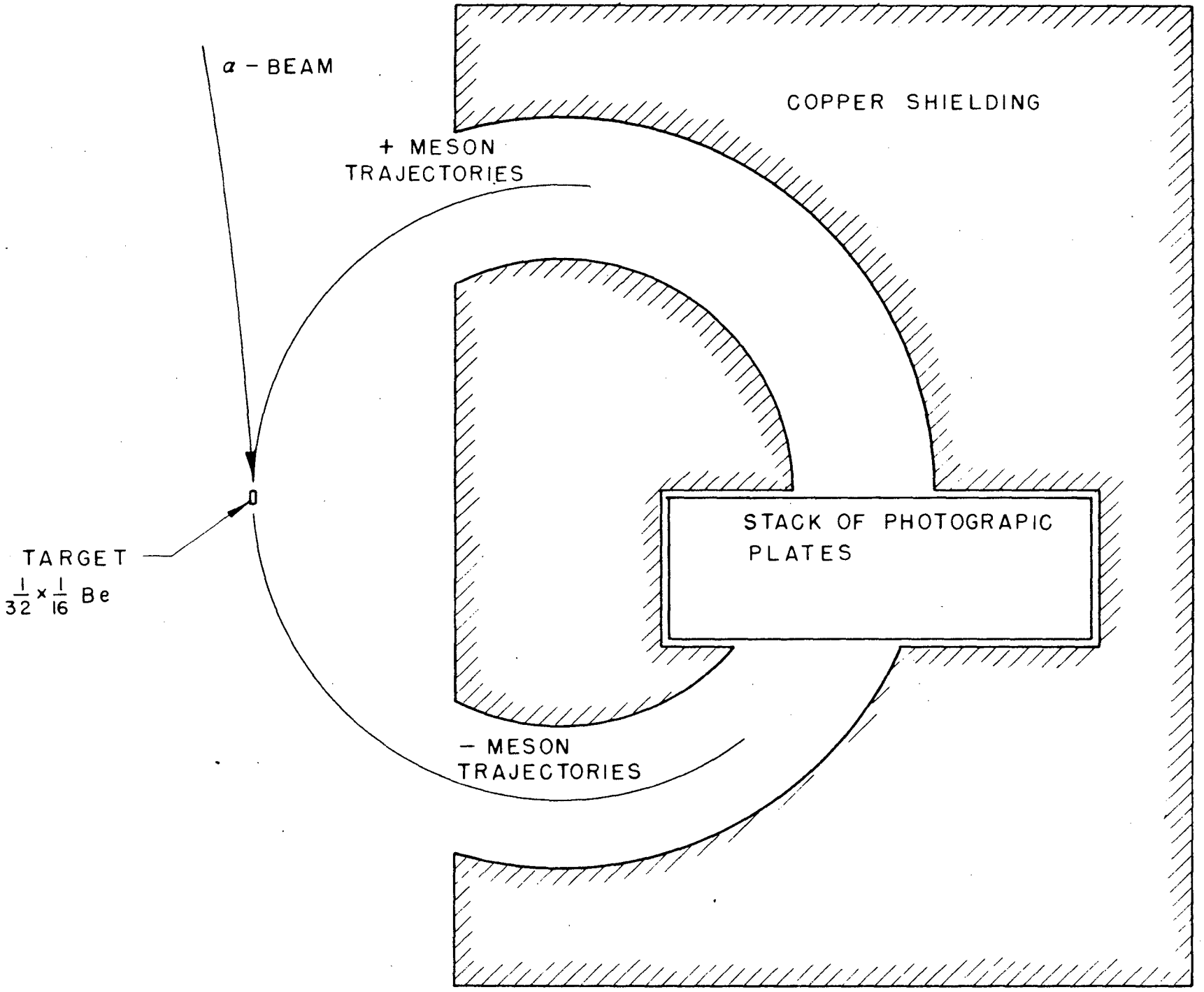
α - BEAM
COPPER SHIELDING
+ MESON
TRAJECTORIES
TARGET
$\frac{1}{32} \times \frac{1}{16}$ Be
STACK OF PHOTOGRAPIC
PLATES
- MESON
TRAJECTORIES

FIG. 5

12958-1

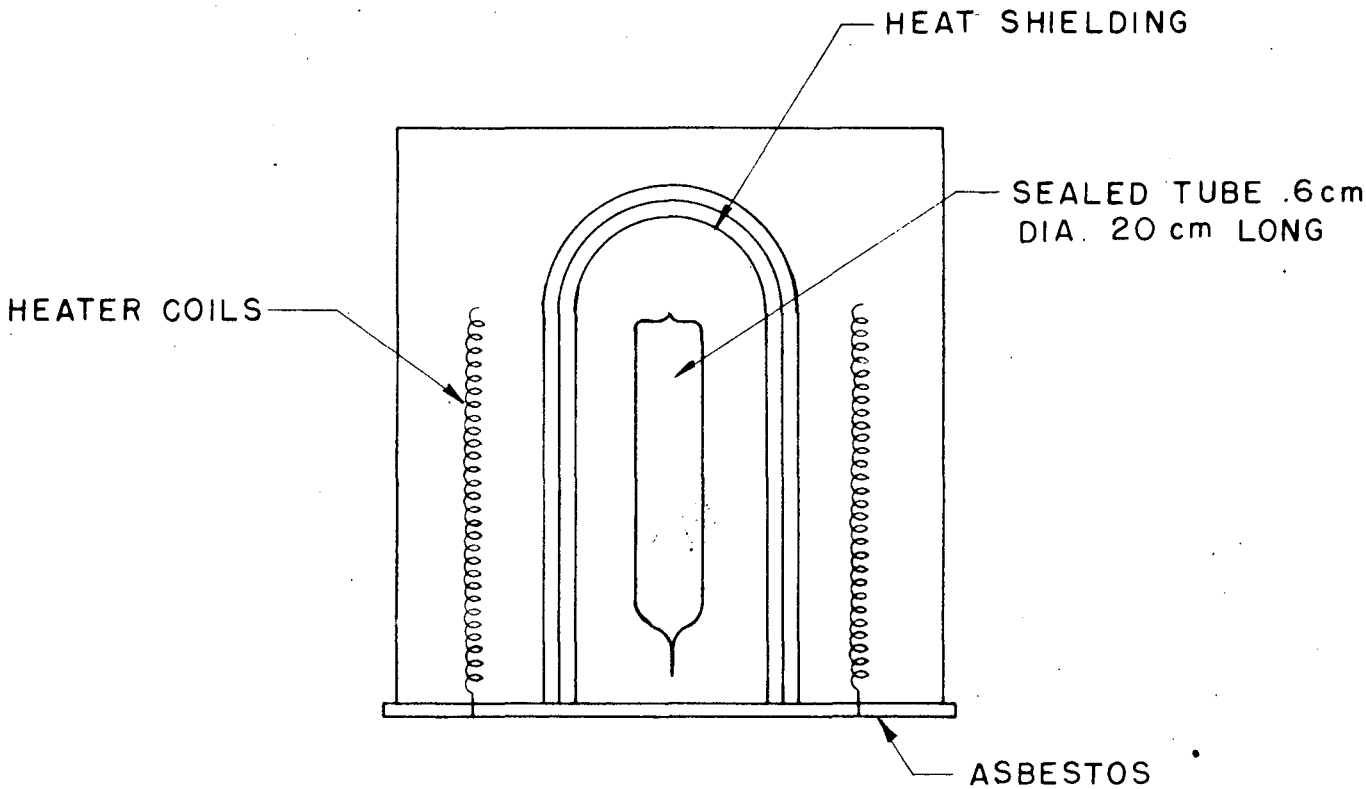
HEAT SHIELDING
SEALED TUBE .6cm
DIA. 20 cm LONG
HEATER COILS
ASBESTOS

FIG. 6

RESTRICTED