UCRL-18208
Cy. 2

University of California
Ernest O. Lawrence Radiation Laboratory

TWO-WEEK LOAN COPY

This is a Library Circulating Copy which may be borrowed for two weeks. For a personal retention copy, call Tech. Info. Division, Ext. 5545

ELLIPSOMETER FOR USE WITH LEED CHAMBER

Rolf H. Muller

May 1968

RECEIVED
LAWRENCE
RADIATION LABORATORY
JUL 8 1968
LIBRARY AND
DOCUMENTS SECTION

Berkeley, California

UCRL 18208

DISCLAIMER

This document was prepared as an account of work sponsored by the United States Government. While this document is believed to contain correct information, neither the United States Government nor any agency thereof, nor the Regents of the University of California, nor any of their employees, makes any warranty, express or implied, or assumes any legal responsibility for the accuracy, completeness, or usefulness of any information, apparatus, product, or process disclosed, or represents that its use would not infringe privately owned rights. Reference herein to any specific commercial product, process, or service by its trade name, trademark, manufacturer, or otherwise, does not necessarily constitute or imply its endorsement, recommendation, or favoring by the United States Government or any agency thereof, or the Regents of the University of California. The views and opinions of authors expressed herein do not necessarily state or reflect those of the United States Government or any agency thereof or the Regents of the University of California.

Submitted to Review
of Scientific Instruments

UCRL-18208
Preprint

UNIVERSITY OF CALIFORNIA
Lawrence Radiation Laboratory
Berkeley, California

AEC Contract No. W-7405-eng-48

ELLIPSOMETER FOR USE WITH LEED CHAMBER

Rolf H. Muller

May 1968

ELLIPSOMETER FOR USE WITH LEED CHAMBER

Rolf H. Muller

Inorganic Materials Research Division, Lawrence Radiation Laboratory,
and Department of Chemical Engineering,
University of California, Berkeley, California

The combination of ellipsometry with low energy electron diffraction (LEED) provides a powerful tool for the study of solid surfaces.[1] Applications include the distinction between ordered and disordered adsorption from ultrahigh vacuum and the determination of optical constants of atomically clean single crystal surfaces. Since both ellipsometry and LEED equipment have become rather prominent in recent years, their simple combination, which has been very successful in this laboratory, may be of interest to others.

The chief problems in combining the two types of instrumentation arise from the requirement for time-consuming alignment of the optical components, combined with the need to remove them every time the bakeout shrouding is placed around the ultrahigh vacuum system. For this reason, the optical components[2] have been mounted on a separate table which can be moved on retractable casters and is rapidly placed over the frame of a LEED apparatus of conventional construction.[3] Reproducible positioning is achieved by means of spacers and tapered pins between both frames.

---

1. A. J. Melmed, H. P. Layer, J. Kruger, Surface Sci. 9, 476 (1968).
2. Optical components taken from Ellipsometer Model L 119, Gaertner Scientific, Chicago, Illinois.
3. The LEED equipment shown in Fig. 2 was laboratory-built with a Varian Model 981-0000(609-638) Chamber. The ellipsometer table also fits the commercially available Varian LEED Model 981-0000.

The construction of the table is indicated in Fig. 1. A welded frame of 3" angle irons supports a 3/4" aluminum plate, which serves as table top and is stiffened on the unsupported side by two 1-1/2x3" channel irons mounted on top of the table. The two optical components close to the light source, the collimator with polarizer and the compensator, are mounted with spacers on the aluminum plate in fixed positions, (except for a tilting motion of the telescope). On the other hand, the telescope with analyzer is mounted such that lateral and vertical translatory, as well as rotatory motion, is possible. These degrees of freedom are necessary for aligning the optic axis of collimator and telescope so that they intersect in the specimen surface under an angle of 90°. A lateral translatory motion of 20 cm is provided by means of four linear ball bearings[4] on two 3/4" precision rods to clear the front window of the LEED chamber for observation of the electron diffraction patterns. The alignment of the optic axis is performed before the ellipsometer is connected to the vacuum system. A test mirror, positioned in place of the specimen surface, and supported by a rotating stage[5] accurate to 0.25 seconds of arc, is used for auto-collimation with collimator and telescope. After alignment of the optic axis, the azimuth circles of polarizer, compensator and analyzer are adjusted with the test mirror in reflecting position.

4. 3/4" I.D. Ball bushing A 122026, and hardened rod, 1 mil under 3/4", Thompson Industries Inc., Manhasset, New York
5. 360° Polygon, A. A. Industries Inc., Detroit, Michigan.

Any change in the azimuth circle adjustment, found after the ellipsometer is connected to the vacuum chamber, is indicative of birefringent or misaligned chamber windows.

The windows on the LEED chamber are made of selected 7056 glass of 3/8" thickness, flat to 5 wavelengths and parallel to 1 minute of arc over a 3/4" diameter circle in the center, and sealed to 8" and 6" flanges, respectively. No birefringence could be measured on the unmounted windows at normal incidence, (phase difference between two orthogonal components less than 0.02°). The surfaces of the windows are normal to the light beams to within 1°, which is sufficient to affect the measured quantities ψ and Δ by less than 0.01°. In addition to the optical elements discussed, Figs. 1 and 2 also show: (1) a light-chopper for improving the signal to noise ratio by use of a phase-sensitive detector,[6] (2) a pinhole opening in the focal plane of the collimator for control of the lateral coherence properties of the illuminating beam, (3) a pinhole in the focal plane of the telescope for control of the spread in angle of incidence, and (4) an iris diaphragm for restricting the observed specimen area.

The chief merits of the arrangement given are its relatively simple construction and the use of a standard LEED chamber. Only a major reconstruction of the latter would remove the two principal shortcomings of the present design, namely, the 45° angle of incidence on the specimen (which would preferably be $70\text{-}80^{\circ}$) and the need to rotate the specimen between LEED and ellipsometer observations.

6. Lock-in amplifier Model HR-8, Princeton Applied Research Corp., Princeton, New Jersey.

ACKNOWLEDGMENTS

I wish to thank Mr. Walter Toutolmin for the execution of all mechanical construction. This work was performed under the auspices of the U. S. Atomic Energy Commission.

FIGURE CAPTIONS

Fig. 1 Ellipsometer table for attachment to LEED equipment.

(a) Plan view of table top A with outline of LEED chamber B and position of optical elements: C = monochromatic light source, D = light chopper, E = pinholes in focal plane of lenses F in collimator and telescope, G = Glan-Thompson polarizing prisms, H = quarter wave compensator, side window I and optical viewport K on LEED chamber, L = crystal specimen, M = iris diaphragm, N = photomultiplier.

(b) Side view of table. (LEED chamber and optical elements not shown) O = stiffening members (channel, 3"x1-1/2", 1/4" wall) on table top A (3/4" aluminum plate). P = welded frame (angle, 3"x3", 3/16" wall) with braces Q (2"x1", 3/16" wall), adjustable legs R and swivel casters S.

Fig. 2 Ellipsometer attached to LEED apparatus.

T = spacer for fixed mounting of collimator and compensator assemblies, U = crystal manipulator. Provisions for alignment of telescope assembly: V = rods for lateral translation with sleeves for reproducible positioning, W = dovetail carrier for vertical translation, X = base for rotation in horizontal plane, Y = screw for rotation in vertical plane. Other parts as identified in Fig. 1.

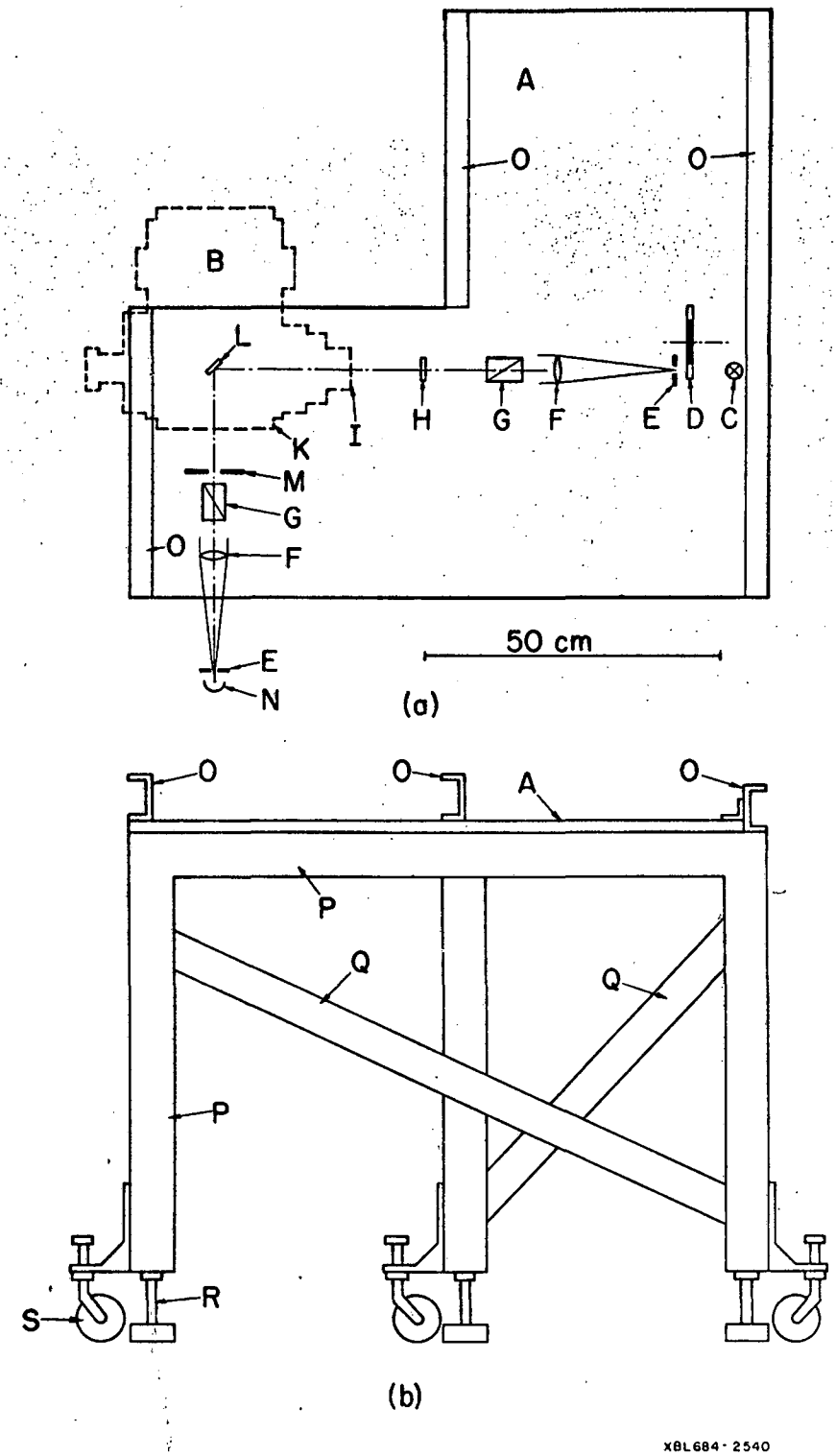

Fig. 1

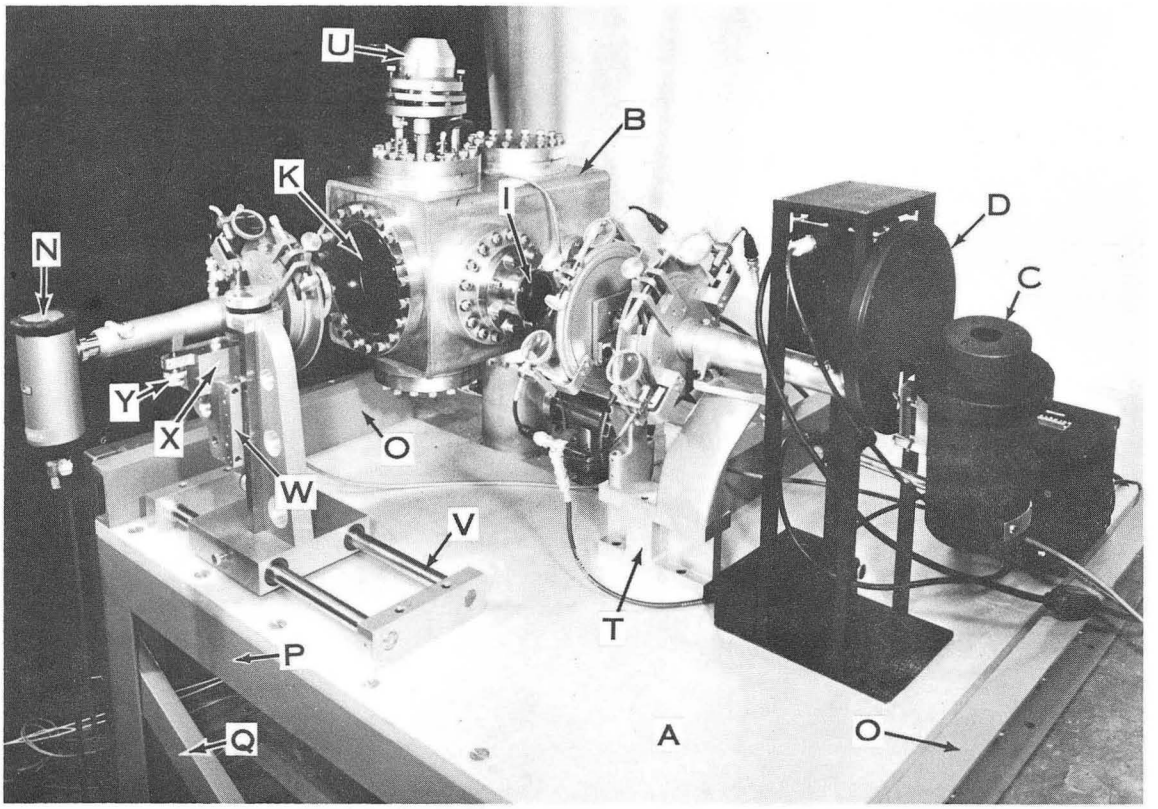

XBB 6712-7040-A

Fig. 2

This report was prepared as an account of Government sponsored work. Neither the United States, nor the Commission, nor any person acting on behalf of the Commission:

A. Makes any warranty or representation, expressed or implied, with respect to the accuracy, completeness, or usefulness of the information contained in this report, or that the use of any information, apparatus, method, or process disclosed in this report may not infringe privately owned rights; or

B. Assumes any liabilities with respect to the use of, or for damages resulting from the use of any information, apparatus, method, or process disclosed in this report.

As used in the above, "person acting on behalf of the Commission" includes any employee or contractor of the Commission, or employee of such contractor, to the extent that such employee or contractor of the Commission, or employee of such contractor prepares, disseminates, or provides access to, any information pursuant to his employment or contract with the Commission, or his employment with such contractor.