UCRL- 1821

CONFIDENTIAL

SECURITY INFORMATION

UNIVERSITY OF CALIFORNIA — BERKELEY

TWO-WEEK LOAN COPY

This is a Library Circulating Copy
which may be borrowed for two weeks.
For a personal retention copy, call
Tech. Info. Division, Ext. 5545

RADIATION LABORATORY

UCRL-1821
c.2

CONFIDENTIAL

SECURITY INFORMATION

DISCLAIMER

This document was prepared as an account of work sponsored by the United States Government. While this document is believed to contain correct information, neither the United States Government nor any agency thereof, nor the Regents of the University of California, nor any of their employees, makes any warranty, express or implied, or assumes any legal responsibility for the accuracy, completeness, or usefulness of any information, apparatus, product, or process disclosed, or represents that its use would not infringe privately owned rights. Reference herein to any specific commercial product, process, or service by its trade name, trademark, manufacturer, or otherwise, does not necessarily constitute or imply its endorsement, recommendation, or favoring by the United States Government or any agency thereof, or the Regents of the University of California. The views and opinions of authors expressed herein do not necessarily state or reflect those of the United States Government or any agency thereof or the Regents of the University of California.

UNIVERSITY OF CALIFORNIA
Radiation Laboratory

Cover Sheet
Do not remove

INDEX NO. UCRL-1821
This document contains 18 pages
This is copy 58 of 81 series B

DECLASSIFIED

Issued to University of Calif. Radiation Lab.

CONFIDENTIAL

Classification

Each person who receives this document must sign the cover sheet in the space below.

Route to	Noted by	Date	Route to	Noted by	Date

I-5(M)

CONFIDENTIAL

UCRL-1821

Distribution-Chemistry-Transuranic Elements

SECURITY INFORMATION

UNIVERSITY OF CALIFORNIA

Radiation Laboratory

Contract No. W-7405-eng-48

DECLASSIFIED

THE ALPHA SPECTRA OF Pu^{239} and Pu^{240}

Frank Asaro and I. Perlman

May 15, 1952

SECURITY INFORMATION

CONFIDENTIAL

RESTRICTED DATA

This document contains restricted data as defined in the Atomic Energy Act of 1946. Its transmittal or disclosure of its contents in any manner to an unauthorized person is prohibited.

Berkeley, California

DECLASSIFIED

Standard Distribution: Series B	Copy Nos.
Argonne National Laboratory	1-8
Army Chemical Center	9
Atomic Energy Commission, Washington	10-11
Brookhaven National Laboratory	12-14
Carbide and Carbon Chemicals Company (K-25 Plant)	15-16
Carbide and Carbon Chemicals Company (ORNL)	17-22
Carbide and Carbon Chemicals Company (Y-12 Area)	23
Chicago Patent Group	24
Dow Chemical Company (Rocky Flats)	25
duPont Company	26-28
General Electric Company (ANPP)	29
General Electric Compnay, Richland	30-33
Hanford Operations Office	34
Idaho Operations Office	35-36
Iowa State College	37
Knolls Atomic Power Laboratory	38-41
Los Alamos	42-44
Mound Laboratory	45-47
Naval Research Laboratory	48
New York Operations Office	49-50
North American Aviation, Inc.	51-52
Patent Branch, Washington	53
Savannah River Operations Office (Wilmington)	54
U. S. Naval Radiological Defense Laboratory	55
UCLA Medical Research Laboratory (Warren)	56
University of California Radiation Laboratory	57-60
University of Rochester	61-62
Vitro Corporation of America	63-64
Westinghouse Electric Corporation	65-66
Wright Air Development Center	67-68
Technical Information Service, Oak Ridge	69-83

THE ALPHA SPECTRA OF Pu^{239} and Pu^{240}

Frank Asaro and I. Perlman
Radiation Laboratory and Department of Chemistry
University of California, Berkeley, California

May 15, 1952

DECLASSIFIED

ABSTRACT

Utilizing a magnetic alpha particle spectrograph the complex alpha spectrum of Pu^{239} was found to consist of three groups; α_0 (69 percent), α_{13} (20 percent) and α_{51} (11 percent). The spectrum of Pu^{240} consisted of two groups, α_0 (76 percent) and α_{44} (24 percent). The nomenclature α_x refers to that alpha group which leaves the product nucleus with an energy of x kev above the ground state. The alpha particle energy of α_0 of Pu^{239} was measured as 5.150 ± 0.002 Mev and that of Pu^{240} at 5.162 ± 0.004 Mev. These values are correlated with the gamma rays and conversion electrons observed by other workers to form a partial decay scheme.

DECLASSIFIED

THE ALPHA SPECTRA OF Pu^{239} and Pu^{240}

Frank Asaro and I. Perlman
Radiation Laboratory and Department of Chemistry
University of California, Berkeley, California

May 15, 1952

INTRODUCTION

Soon after the availability of Pu^{239} in supra-tracer quantities the alpha activity was found to be accompanied by gamma radiation in low abundance.[1,2] These and later measurements will be discussed below where the decay scheme is considered. The complex alpha spectrum presumed from these data was first observed directly by Rosenblum, Valadares and Goldschmidt[3] who employed a large permanent magnet spectrograph. They found the highest energy group in highest abundance and a prominent group at 50 kev lower energy. Some evidence was also found for a very weak group 200 kev below the main group. The present study amplifies these results and attempts to explain the gamma ray spectrum which has been reported by several sources. Samples of plutonium containing measurable Pu^{240} activity have been used to determine its alpha particle spectrum.

EXPERIMENTAL RESULTS

<u>Pu^{239} Alpha Spectrum</u>. The magnetic alpha particle spectrograph used for these measurements has been described in other reports.[4,5] The source in each case was prepared by vacuum sublimation from a tungsten filament

to a platinum plate of the dried residue from a solution of plutonium(IV) in hydrochloric acid. The platinum plate was masked to give a 1/8 x 1 inch band and in the case of Pu^{239} approximately 2 micrograms was deposited. Samples so prepared have the extreme uniformity demanded for alpha particle spectroscopy.

Figure 1 shows the spectrum of isotopically pure Pu^{239}. The source consisted of 2.5 micrograms of Pu^{239} and was exposed for 110 hours. The designations for the alpha groups follows the same convention previously used in which the highest energy group, presumed to be the ground state transition, is termed α_0 and other groups are shown with subscripts indicating the corresponding energy levels in kilovolts above the ground state. Although no higher energy group than that designated α_0 has been detected there is some evidence to be discussed later which indicates that α_0 is not the ground state transition. If this proves to be so, these designations will have to be revised.

All of the three peaks observed have the same width at half maximum. (~ 8 kev) and the abundances as indicated were found both by comparing peak heights and by integrating the total alpha tracks.

In another exposure for 90 hours the slit system was changed to give higher transmission in order to look for rare alpha groups. The peak widths went up to 21 kev and α_0 and α_{13} were no longer clearly resolved. The abundance of α_{51} was found to be 11.7 percent which agrees with the other measurement cited. A careful search was made for other alpha groups and the data are recorded in Figure 2. The energy range covered was 4.82 - 5.57 Mev which extends from 330 kev below the main group to 430 kev

above it. No alpha group was found and the limits can be set as follows: from 25 kev above α_0 to 430 kev there is no group in greater than 0.15 percent abundance; from 70 kev below α_0 (20 kev below α_{51}) to 330 kev there is no group in greater than 0.3 percent abundance. The plate from which Figure 1 was derived was also counted over an extended range and the results were substantially the same although the limits of detection were not so low because of the fewer total tracks recorded.

The energy for Pu^{239} was determined by comparing α_0 with Po^{210} as the standard for which the particle energy was taken as 5.298 Mev.[6] The energy for α_0 of Pu^{239} was found to be 5.150 ± 0.002 Mev as compared with the other spectrograph value,[3] 5.147, obtained using ThC as a standard.

These spectrograph values are in good agreement with reported values obtained using ionization chambers and range methods. Cranshaw and Harvey[7] using an ionization chamber with a pulse height analyzer reported 5.159 (±0.005) Mev and Jesse and Forstat[8] obtained 5.140 (±0.005) Mev by measuring total ionization current. An air range determination by Chamberlain *et al.*[9] gave 5.15 Mev.

The energies of the two shorter range groups were obtained from their displacements from the main group using the dispersion of the instrument as described previously.[5] The differences in energy from the main group, α_0, were 12.8 ± 0.7 kev and 49.7 ± 0.7 kev. Rosenblum, Valadares, and Goldschmidt[3] resolved α_{51} and found its energy to be 50 kev lower than the main group and our result is in excellent agreement for this group. Adding a correction of 1.7 percent to these alpha particle energy differences to obtain the spacing between energy levels and rounding off to the nearest

kilovolt, the level differences become 13 and 51 kev, hence α_{13} and α_{51}. These energies would correspond to gamma ray energies between the appropriate levels.

<u>Pu^{240} Alpha Spectrum</u>. This isotope of plutonium is an alpha emitter of 6600 year half-life[10] and is best prepared by neutron capture by Pu^{239}.[11] Its alpha energy is known to be very close to that for Pu^{239} and had not previously been resolved for sure.

A sample containing 5×10^5 disintegrations per minute of mixed Pu^{239} and Pu^{240} activities was exposed for 46 hours, and the spectrum shown in Figure 3 was registered. The peaks were readily assigned to their respective isotopes because (1) mass spectrographic analysis indicated that Pu^{240} was in an abundance such that is alpha activity should predominate,* and (2) the energy differences and relative abundances of the three peaks assigned to Pu^{239} were in close agreement with those for pure Pu^{239} (see Figure 1).

The energy of the main group of Pu^{240} is 12 ± 2 kev greater than that for Pu^{239}. Using our value, 5.150 Mev, for the energy of the α_0 group of Pu^{239}, the energy for Pu^{240} α_0 group is 5.162. Since we are fairly certain that the most abundant group of an even-even alpha emitter represents the ground state transition we may then calculate the decay energy for Pu^{240} as 5.250 Mev.

---

*We are indebted to Dr. S. G. Thompson for the plutonium used in this measurement and to Mr. F. L. Reynolds for the mass analysis.

The second alpha group of Pu^{240} is 43.5 ± 2 kev lower energy than the main group hence it is designated α_{44} signifying that it leads to a state 44 kev above the ground state. Its abundance is 24 percent, therefore the partial alpha half-lives for the two groups, based on the 6600 year measured half-life, are 8700 years and 27,000 years. The half-life versus energy relationships for these groups are close to expectations of alpha decay as can be seen from Figure 4. The curve is the calculated half-life versus energy relationship for plutonium isotopes in which the rigorous one body decay theory was applied.[12,13] The nuclear radii were taken to follow the function, $r = 1.51\ A^{1/3} \times 10^{-13}$ cm, and the effective alpha energies were obtained by adding to the decay energies, 39 kev to account for the change in orbital electron binding as suggested by Ambrosino and Piattier.[14] A similar curve for curium and its method of derivation are shown in another publication.[5]

Figure 4 shows that both Pu^{240} groups are in close agreement with the thoery, a situation which we now accept as normal for an even-even nuclide. Similarly the groups for Pu^{239} follow the now familar pattern of hindered decay expected of nuclides with odd nucleons.

DISCUSSION OF DECAY SCHEME

It will be pointed out that the Pu^{239} alpha spectrum as observed here cannot explain all features of the gamma ray and conversion electron spectra which have been reported. First we shall examine the area of agreement which is indicated in Figure 5.

A gamma ray of 50 kev was reported early by Ghiorso[1] and this has been abundantly confirmed. West and Dawson[15] using a proportional counter spectrometer found a 52.3 ± 0.4 kev photon in an abundance of 7×10^{-5} per alpha particle, Martin[16] in this laboratory has measured this gamma ray as 53 ± 2 kev with a scintillation spectrometer, while two laboratories[17,18] have found conversion electrons corresponding to a 50 kev gamma ray in coincidence with alpha tracks in Pu^{239} impregnated nuclear emulsions. Albouy and Teillac[17] found the electrons to be present to the extent of 16 per 100 total alpha particles while Dunlavey and Seaborg[18] found 12.5 electrons per 100 alpha particles. It seems almost certain that this gamma ray represents the transition between the levels reached by α_{51} and α_0 because of the agreement in energy and moderate agreement in abundance. Rosenblum and coworkers[3] reported a much higher abundance than ours for α_{51}, but their resolution would have been more difficult.

West and Dawson[15] also found a gamma ray of 37.2 ± 0.5 kev in low abundance which corresponds exactly to a transition between α_{51} and α_{13}. They also found in low abundance gamma rays of 59.2 and 32.0 kev. The close agreement in energy of these photons with those for two of the most prominent gamma rays of Am^{241} (59.78 and 33.36 kev)[19] makes it tempting to consider that they are from Am^{241} which grew from Pu^{241}.* A similar but

---

*Dr. West has kindly informed us that another article is in publication showing that the 59 kev gamma ray is from Am^{241} and that the 32 kev peak may have some other origin.

more extensive series of conversion electron lines has been found by Wagner, Freedman and Engelkemeir[20] and these the authors attribute to Pu^{240} about which more will be said presently. The latter paper reports four other weak lines in pure Pu^{239} and these could be interpreted as the L_I or L_{II}, L_{III}, M, and N lines of the 51 kev transitions or two of them could arise from the 38 kev transition.

The preceeding discussion shows that there need be no sharp disagreement between our alpha spectrum and the gamma ray transitions so far considered. However, there is harder gamma radiation which is more difficult to explain. There have been reported gamma rays of 300 kev[1] and 420 kev[2] in very low abundance, and these could well correspond to low energy alpha groups in quantity below our level of detection. Another gamma ray can be deduced from the work by Albouy and Teillac[17] and by Dunlavey and Seaborg[18] who both measured electron tracks stemming from alpha tracks in nuclear emulsions. Albouy and Teillac reported theirs as the "K conversion electrons from a 200 kev gamma ray" which would mean that the electron line was 100 kev and the abundance as 0.1 - 1 percent of the alpha particles. It is doubtful that these electrons are K shell converted because the corresponding K x-rays have not been seen in requisite abundance. Dunlavey and Seaborg found similar electrons in the energy range 100 $\pm$ 20 kev in 0.5 percent abundance. If the electrons are the L conversion line of an $\sim$ 120 kev gamma ray and the abundance is correct the corresponding alpha group should have been seen. According to the data of Figure 3 an alpha group of lower energy than α_0 by 70 kev or more would be detected if present in 0.3 percent abundance or greater. The discrepancy between the abundance of the $\sim$ 120 kev

transition and the absence of a corresponding alpha group is too close to the limits of error in measurement to be considered real at this stage. If it should prove to be real this may be taken as evidence that the ground state transition for the alpha decay of Pu^{239} has not yet been seen.

We wish to acknowledge the assistance of Miss Beverly Turner and Mr. James Vanderveen in counting the alpha tracks. This work was performed under the auspices of the U. S. Atomic Energy Commission.

REFERENCES

1. A. Ghiorso, Metallurgical Laboratory Report CK-1511 (April, 1944).

2. W. H. Sullivan, T. P. Kohman, and J. A. Swartout, Hanford Report HEW-3-1635 (February, 1945).

3. S. Rosenblum, M. Valadares, and B. Goldschmidt, Compt. rend. 230, 639 (1950).

4. F. L. Reynolds, Revs. Sci. Instruments 22, 749 (1951).

5. F. Asaro, F. L. Reynolds, and I. Perlman, Phys. Rev., in press.

6. M. G. Holloway and M. S. Livingston, Phys. Rev. 54, 18 (1938).

7. T. E. Cranshaw and J. A. Harvey, Can. J. Research 26A, 243 (1948).

8. W. P. Jesse and H. Forstat, Phys. Rev. 73, 926 (1948).

9. O. Chamberlain, J. W. Gofman, E. Segrè, and A. C. Wahl, Phys. Rev. 71, 529 (1947).

10. M. G. Inghram, D. C. Hess, P. R. Fields, and G. L. Pyle, Argonne National Laboratory Report ANL-4653 (June, 1951).

11. A. Ghiorso, R. A. James, L. O. Morgan, and G. T. Seaborg, Phys. Rev. 78, 472 (1950).

12. M. A. Preston, Phys. Rev. 71, 865 (1947).

13. I. Kaplan, Phys. Rev. 81, 962 (1951).

14. G. Ambrosino and H. Piatier, Compt. rend. 232, 400 (1951).

15. D. West and J. K. Dawson, Proc. Phys. Soc. 64, 586 (1951).

16. D. Martin, unpublished data.

17. G. Albouy and J. Teillac, Compt. rend. 232, 326 (1951).

18. D. Dunlavey and G. T. Seaborg, Phys. Rev., submitted for publication.

19. C. I. Browne and I. Perlman, Bull. Am. Phys. Soc. 26, No. 8, 11 (1951); Phys. Rev., submitted for publication.

20. F. Wagner, Jr., M. S. Freedman, and D. Engelkemier, U. S. Atomic Energy Commission Declassified Document AECD-3304 (November, 1951).

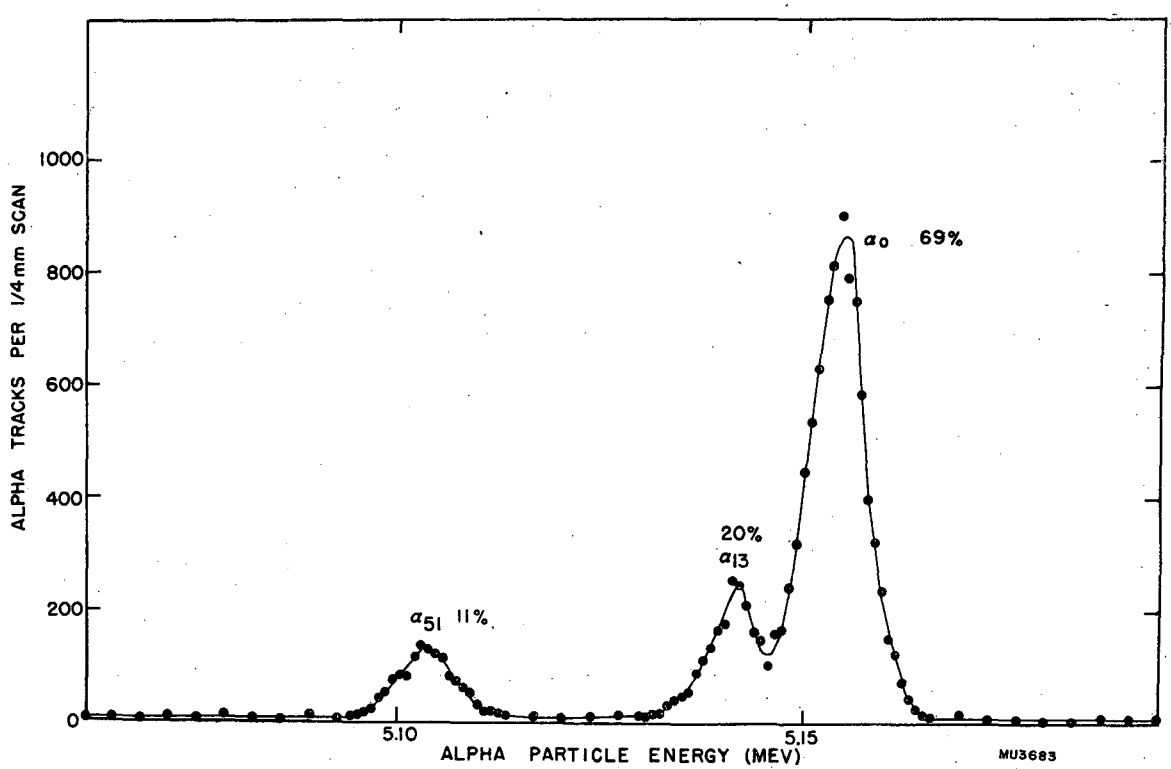

Fig. 1

Pu^{239} alpha spectrum--peak region.

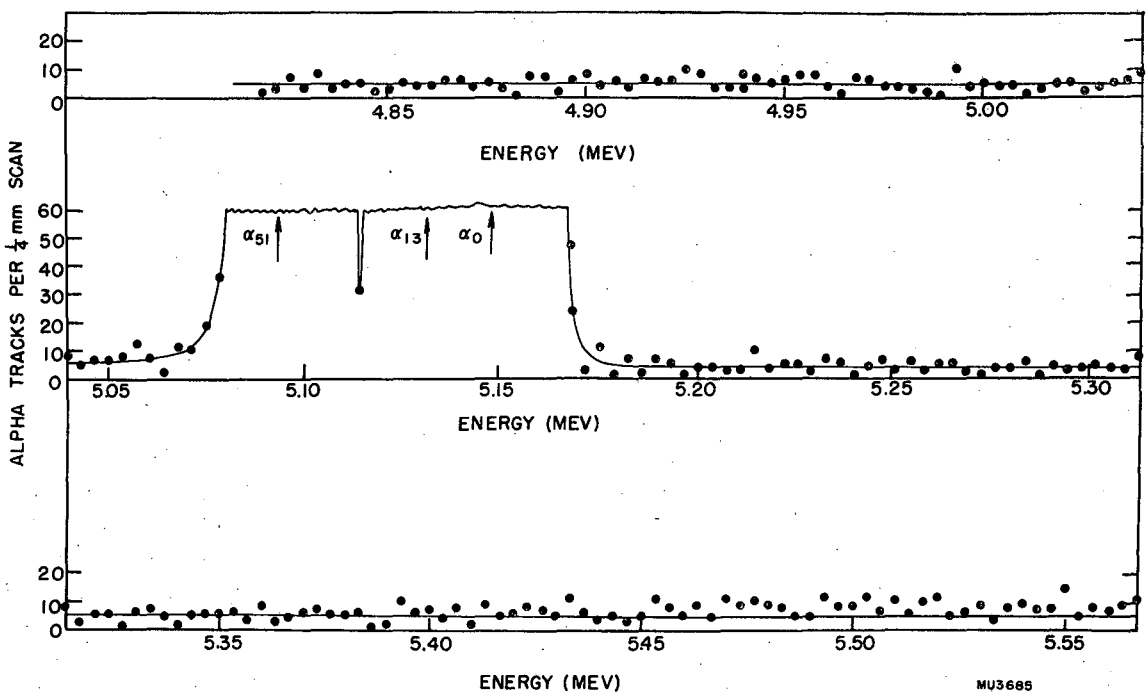

Fig. 2

Pu^{239} alpha spectrum--high and low energy region.

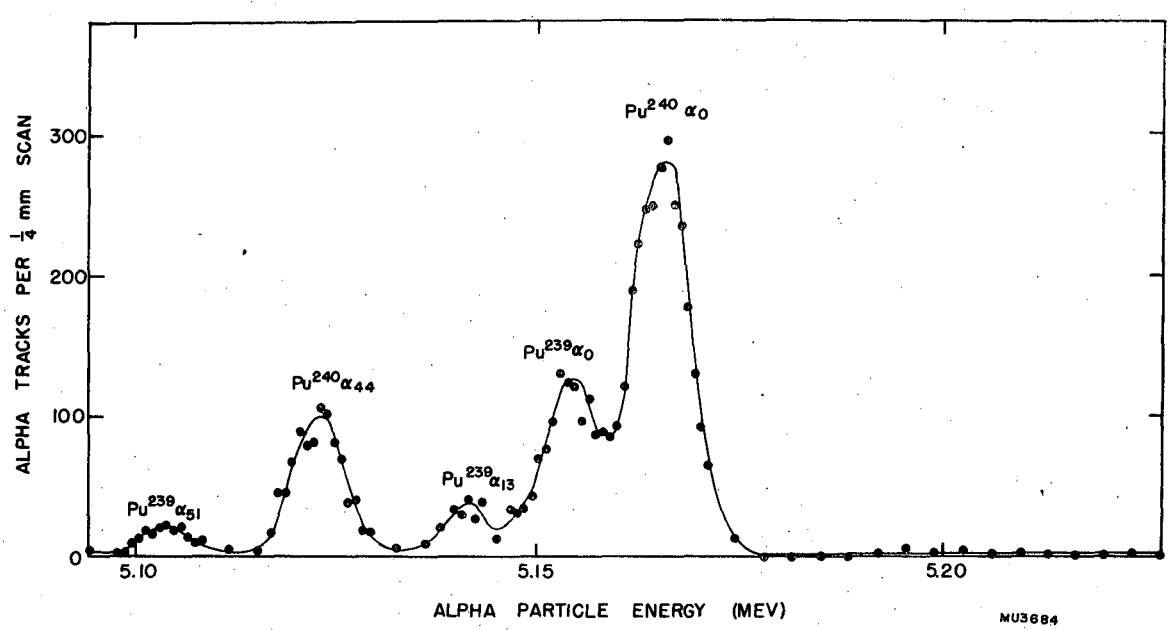

Fig. 3

$Pu^{239,240}$ alpha spectrum.

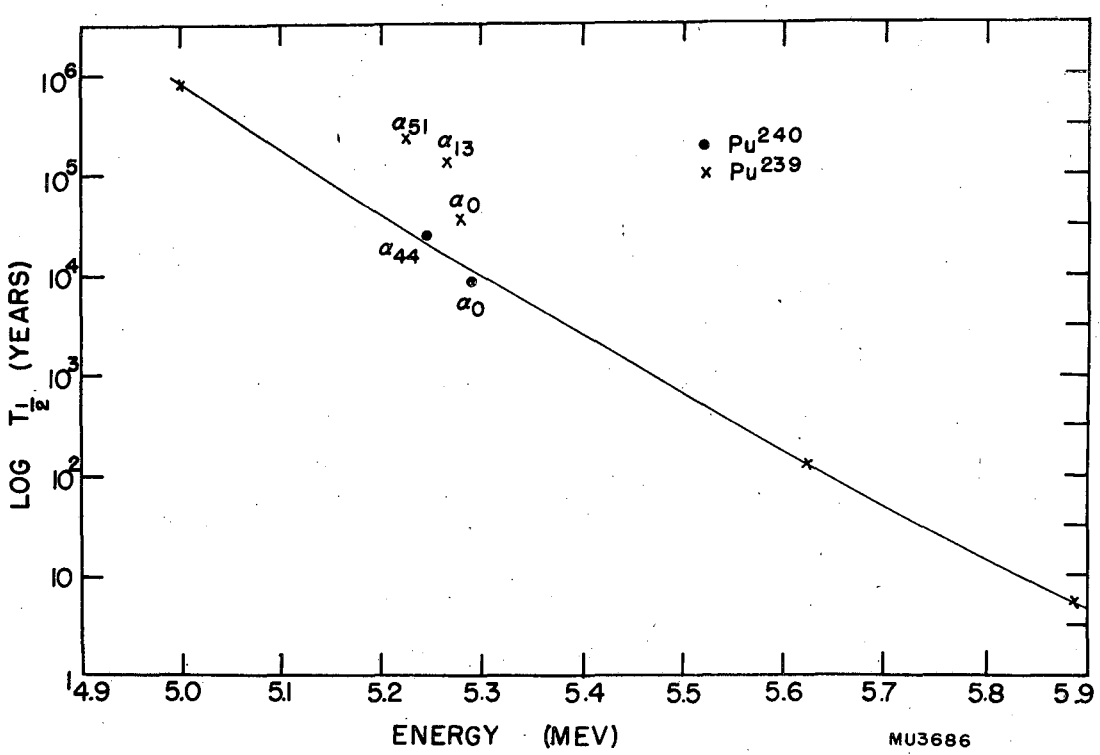

Fig. 4

Theoretical alpha decay curve for plutonium.

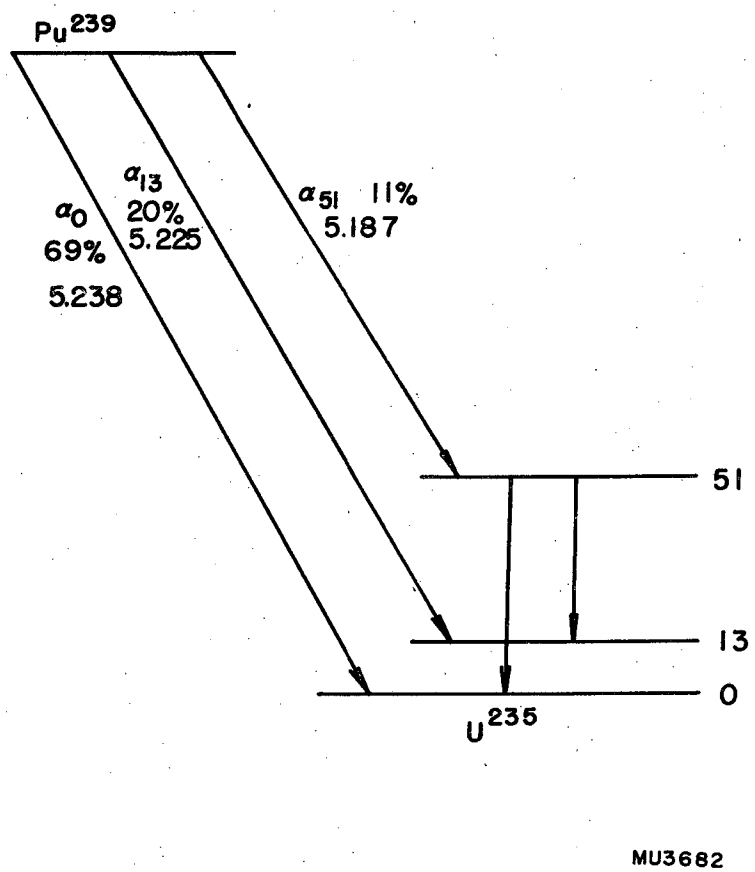

Fig. 5

Pu^{239} partial decay scheme.

CONFIDENTIAL

DECLASSIFIED