UCRL-18235

cy. 2

PHYSICS
Semiannual Report

November 1967 through April 1968

TWO-WEEK LOAN COPY

This is a Library Circulating Copy which may be borrowed for two weeks. For a personal retention copy, call Tech. Info. Division, Ext. 5545

RECEIVED
LAWRENCE
RADIATION LABORATORY

AUG 8 1968

LIBRARY AND
DOCUMENTS SECTION

Lawrence Radiation Laboratory
University of California - Berkeley

UCRL-18235 cy. 2

DISCLAIMER

This document was prepared as an account of work sponsored by the United States Government. While this document is believed to contain correct information, neither the United States Government nor any agency thereof, nor the Regents of the University of California, nor any of their employees, makes any warranty, express or implied, or assumes any legal responsibility for the accuracy, completeness, or usefulness of any information, apparatus, product, or process disclosed, or represents that its use would not infringe privately owned rights. Reference herein to any specific commercial product, process, or service by its trade name, trademark, manufacturer, or otherwise, does not necessarily constitute or imply its endorsement, recommendation, or favoring by the United States Government or any agency thereof, or the Regents of the University of California. The views and opinions of authors expressed herein do not necessarily state or reflect those of the United States Government or any agency thereof or the Regents of the University of California.

UCRL-18235
UC-34 Physics
TID-4500 (51st Ed.)

PHYSICS
Semiannual Report

NOVEMBER 1967 through APRIL 1968

May 1968

David L. Judd
Associate Director for Physics

LAWRENCE RADIATION LABORATORY
University of California
Berkeley, California

This work was done under U. S. Atomic Energy Commission contract W-7405-eng-48. Some results reported in this document may be preliminary or incomplete. The Lawrence Radiation Laboratory requests that this document not be quoted without consultation with the author or the Technical Information Division.

Printed in the United States of America
Available from
Clearinghouse for Federal Scientific and Technical Information
National Bureau of Standards, U. S. Department of Commerce
Springfield, Virginia 22151
Price: Printed Copy $3.00; Microfiche $0.65

PHYSICS SEMIANNUAL REPORT

November 1967 through April 1968

Contents

PHYSICS RESEARCH

Theoretical Physics: Chew

Theory of Strong Interactions

A Multiperipheral Bootstrap Model for High-Energy Collisions 1

Proton-Proton Annihilation in a Multiperipheral Model 1

Multi-Regge Unitarity 1

A Regge-Pole Model with the $M = 1\pi$ in $\pi^+p \to \rho^0\Delta^{++}$ and $\pi^+p \to \rho^+p$ 1

Factorization, Kinematic Singularities, and Conspiracies 2

Nonexistence of Kronecker Deltas in Angular Momentum for Strong Processes 2

Symmetry of the Scattering Amplitude at $t = 0$ 3

Pomeranchon as a Nonsense-Choosing Regge Trajectory 3

π Exchange and Factorization 3

Unitarity and Finite-Energy Sum Rules 4

Finite-Energy Sum Rules for Backward Pion-Nucleon Scattering 4

Self-Consistent Couplings of the 1^- and 2^+ Nonets to the 0^- Mesons 4

Partial Widths of a Heavy Boson, $T(2250) \to \pi\pi$, $N\bar{N}$ 5

Self-Consistent Symmetry Properties of Finite-Energy Sum Rules 5

Symmetries of Self-Consistent Trilinear Meson Couplings 5

Daughters, Conspiracies, and Lorentz Symmetry 5

A New Asymptotic Expansion of the S Matrix 6

Finite Widths and Angular Distributions 6

Relations Between Spin Density Matrix Elements 6

High-Energy Photoproduction with Polarized Photons 6

Effects of Pseudothreshold Constraints on Regge Fits 6

Hadron Sum Rules from SU(3) $\otimes$ SU(3) Current Algebra 7

Current Algebra and Low-Energy Meson-Baryon Scattering 7

Bootstrap Solutions of the Bethe-Salpeter Equation 7

Two-Channel Calculations with the Bethe-Salpeter Equation 7

Regge-Pole Formalism for Pionic Disintegration of the Deuteron 8

Study of Inelastic Effects in P_{11}-State πN Scattering 8

Separable Potential Fits to Nucleon-Nucleon Scattering Data 8

Nucleon-Nucleon Scattering Potential 9

*Preceding Semiannual Reports: UCRL-17876, UCRL-17544

General Theoretical Physics
Analysis of n-He Scattering for the Pion Electromagnetic Form Factor . . . 9
S-Operator Theory of Weak Interactions 9
Low-Energy Nuclear Physics
Equilibrium Configurations of a Charged Conducting Drop 10
Ground-State Masses of Even-Even Nuclei 10
Average Nuclear Properties 11
Many-Body Physics
Quasilinear Evolution of the Weibel-Kahn Instability 11
N-Body Faddeev Equations and the Cluster Expansion 12
Boltzmann Equation for Polyatomic Gas 12
Accelerator Theory
Computations Concerning Nonlinear, Area-Preserving Algebraic Equations . . 12
Collective Ion Accelerator 12
Publications and Papers 13

Experimental Physics: Alvarez
Bubble Chamber Experiments
Associated Production Experiment 17
Hyperon Production and Decay 17
Radiative Pion Production 17
Leptonic Decays of Eta Mesons 17
Production of Eta Mesons 17
Radiative Electroproduction 18
π63 Experiment 18
K63 Experiment 18
Production and Decay of Cascade Hyperons 18
Reactions $K^-p \rightarrow \bar{K}^0 n$ and $K^-p \rightarrow \Lambda\pi^0$ 19
Decay $\omega \rightarrow \pi^+\pi^-$ 19
Production of Σ's in K^-p Interactions 19
Study of the Reaction $K^-p \rightarrow \Sigma^\pm\pi^\pm$ 19
Reaction $K^-p \rightarrow K^*_{1/2}(892)\, N^*_{3/2}(1238)$ 19
Study of K^-p Four-Pronged Reactions 20
K^- Interactions in Deuterium 20
K 65 Experiment 20
Study of Σ Decay Parameters 20
Σ Interactions and Decays 21
Σ^+ Magnetic Moment 21
$K^-p \rightarrow \Lambda\pi^+\pi^-$ and $K^-p \rightarrow \Lambda^+$ Missing Mass 21
Study of the Neutral K Meson 22
Charge-Exchange ($K^-p \rightarrow \bar{K}^0 n$) and Elastic ($K^-p \rightarrow K^-p$) Reactions 22
π66 Experiment 22
π^+d Interactions from 2.8 to 4.2 GeV/c 22
π^+d Interactions from 1.1 to 2.3 GeV/c 23

Search for a $2\pi^0$ Resonance Near 730 MeV in π^+d Interactions 23
BP 66 Experiment 23
P67 Experiment: Antiproton Interactions in Hydrogen and Deuterium 24
D66 Experiment 24
P65 Experiment 24
Nonstrange Interactions in pp Collisions at 6.6 GeV/c 24
Strange-Particle Interactions in pp Collisions at 5.5 and 6.6 GeV/c . . . 25
LRL-SLAC Experiment on π^-p Inelastic Reactions 25
K82 Experiment 26
Backscattered Laser Beam at SLAC 26
Accelerator Experiments Using Spark Chambers
Program in Collaboration with Moyer-Helmholz Group 26
Neutral Decay Modes of the η Meson 26
Neutral Diboson Experiment 27
Deuteron Missing-Mass Experiment 27
Experimentation Using Cosmic Rays
High-Altitude Particle Physics and Cosmic Ray Experimental Facility . . . 27
Cosmic Ray Muon Experiment 28
Flux Amplifier 29
Data-Reduction Operations
Effort 29
Scanning 29
Measuring 31
May-November 1968 Forecast 32
Programming Effort
Personnel 32
Programs 33
Data-Editing Programs 33
Data-Analysis Programs 33
Library-Function Programs 34
Spiral Reader Programs 34
Spark Chamber Programs 35
Data on Particles and Resonant States 36
Publications and Papers 36

Experimental Physics: Crowe, Miller
K^+ Decay Analysis 39
Pion Form Factor 39
Measurement of the Differential Cross Section for $\pi^-p \rightarrow n\gamma$ 39
$\pi\pi$ S-Wave Interaction 40
Charge Asymmetry in $K^0_{\mu 3}$ Decays 40
K^0_2 Charge Asymmetry 40
184-Inch Cyclotron Regenerator Studies 41

Nuclear Emulsion Group: Heckman

Temporal Changes in the Inner-Belt Protons 43
Particle Identifier 43
Stopping-Power Differences of $\pi^{\pm}$ Mesons 44
High-Energy Neutron Spectrum Measurements 44
Publications and Papers 44

Experimental Physics: Lofgren

Diboson Production by 2- to 5-GeV/c Pions 45
Measurement of the $(K^+ \rightarrow e^+\nu)/(K^+ \rightarrow \mu^+\nu)$ Branching Ratio 45
Neutral Leptonic Currents 45
Nucleon-Nucleon Triple Scattering 46
Total Cross Sections at Cosmic Ray Energies 46
Publications and Papers 46

Experimental Physics: Moyer-Helmholz

η^0 Decay and $\pi^0\pi^0$n Experiments 47
$K_L^0 \rightarrow 2\pi^0$ 47
K_{e4} Experiment 49
Comparison of the Lifetimes of Positive and Negative Pions 49
A Search for Excited Levels of ^{15}N Produced by μ^- Capture in ^{16}O 49
p-He Scattering Experiment 50
Measurement of $Np \rightarrow \gamma d$ Angular Distribution as a Direct Test of Time Reversal in the Electromagnetic Interaction 50
Photoproduction of Vector Mesons (SLAC) 50
π^-- ^{4}He Interactions 51
π^-- ^{3}He Interactions 51
Wire Spark Chambers and Electronic Readouts 51
Spark Chambers for Medical Program 51
Publications and Papers 52

Experimental Physics: Powell-Birge

25-Inch Hydrogen Bubble Chamber 53
25-Inch Hydrogen Bubble Chamber Run 53
$K^-p \rightarrow \Lambda^0\pi^0$ 53
K^-d and K^-n Elastic Scattering 54
π^+p Interactions from 2.9 to 4.1 GeV/c 54
Study of the Reaction $\pi^+p \rightarrow \eta^0\Delta^{++}$ 55
Study of the Strange-Particle Channels in π^+p at 1.34, 1.43, and 1.68 GeV/c 55
Two-Prong Events in π^+p Film at 1.35, 1.43, and 1.68 GeV/c 55
On-Line System 55
Data Reduction 56
Publications and Papers 57

Experimental Physics: Segrè-Chamberlain

Muon Polarization in the Decay $K^+ \rightarrow \pi^0 \mu^+ \nu$ (Kμ3) 59
Study of the Decay $K^+ \rightarrow \pi^+ \pi^0 \gamma$ 59
Measurement of the π^0 Energy Spectrum in $K^+ \rightarrow \pi^0 \mu^+ \nu$ 59
Study of the Decay $K^+ \rightarrow \mu^+ \nu \gamma$ 60
η Leptonic Decays 60

Nucleon-Nucleon Interactions 60
$\pi^- p$ Interactions at 550 MeV/c 61
$\bar{p}p$ Interactions 61
Pionic Atoms 61
Polarization in $\pi^+ p$ and $\pi^- p$ Elastic Scattering from 250 to 410 MeV 61

Phase-Shift Analysis of $\pi^{\pm} p$ Elastic Scattering Experiments 62
Search for T Violation in Inelastic ep Scattering 62
Polarized-Proton Target Improvements 63
Publications and Papers 63

Atomic Beam Group: Shugart

Atomic Beam Studies 65
Publications and Papers 65

Experimental Physics: Trilling-Goldhaber

New 25-Inch Bubble Chamber Beam 67
$\Lambda^0 p$ Interactions 67
Low-Energy $K^- p$ Interactions 67
$K^+ d$ Interaction from 800 to 1600 MeV/c 68
$\pi^+ p$ Interactions at 3.7 GeV/c 68
$K^+ p$ Interactions at 9 GeV/c 69
Publications and Papers 70

Health Physics: Patterson

Dosimetric Calculations 71
Track Detectors 71
Analysis of Errors in the Evaluation of Flux and Dose 72
Graphical Technique for Estimating Activity Levels Produced in Thermal- and Fission-Neutron Irradiation 72
Photopeak Analysis of Semiconductor Gamma-Ray Spectra by Computer . . 72
Environmental Radiation Studies 72
Radiogeology 73
Spark Chamber 73
Publications and Papers 73

COMPUTING AND DATA HANDLING

Mathematics and Computing: Baker
Physics
For Powell-Birge Group . . . 75
For Trilling-Goldhaber Group . . . 77
For Moyer-Helmholz Group . . . 78
For Lofgren . . . 78
Nuclear Chemistry
Heavy-Ion Studies . . . 79
Spectral Analysis Programs . . . 80
Accelerator and Magnet Design . . . 80
Orbit Studies . . . 81
Special Projects . . . 81
Biomedical Applications . . . 81
Miscellaneous . . . 82
Systems Programming
6411 . . . 84
Accelerator Link . . . 84
Mass Storage System . . . 84
6600 . . . 84
PDP-7, PDP-9 Assembler . . . 85
Research in Mathematics and Computer Sciences
Computer Typography . . . 85
Interactive Time-Sharing System . . . 85
Heat Transfer Through a Thin Rotating Nuclear Target . . . 86
Nonlinear Block-Successive Overrelaxation . . . 86
Surfaces With Linearly Varying Mean Curvature . . . 86
Bounds for Roots of Polynomials . . . 86
Etiology of Leukemia . . . 87
Human Ferrokinetics . . . 87
High-Order Resonance for Duffing's Differential Equation . . . 87
Miscellaneous . . . 87
Computer Operations . . . 88
Publications and Papers . . . 88

Data Handling: White
Computer Program Development
HAZE: Semiautomatic Event Measurement . . . 91
FOG: Geometry and Space Reconstruction . . . 91
CLOUDY: Kinematical Analysis . . . 91
FAIR: Data Display . . . 92
TRIST: System Monitor . . . 92

Event Accounting 92
DAPR: Fully Automatic Event Scanning and Measurement 92
Data-Processing Operations 94

ACCELERATOR OPERATION AND DEVELOPMENT

Accelerator Study Group: Lofgren
Study Group Activities 95
Synchrotron Magnet Design 95
Booster Synchrotron 95
Radio-Frequency Systems 95
Superconductivity 96
Electron-Ring Accelerator Group 99
Publications and Papers 100

Bevatron: Lofgren
Operations 101
Publications and Papers 103

184-Inch Cyclotron: Vale
Model of Radio-Frequency System for Improvement of 184-Inch Cyclotron 105

Physics Research Staff 107

Permuted Keyword Index 109

Physics Research

THEORETICAL PHYSICS

Geoffrey F. Chew, Group Leader

THEORY OF STRONG INTERACTIONS

A MULTIPERIPHERAL BOOTSTRAP MODEL FOR HIGH-ENERGY COLLISIONS

G. F. Chew and A. Pignotti

A simple three-parameter multi-Regge bootstrap model has been constructed to describe high-energy hadron collisions. Central features are the use of unitarity and the Horn-Schmid duality to determine coupling strength. Data on multiple production from proton-proton collisions between 5 and 30 GeV are qualitatively fit. When model was extended to include diffraction-dissociation phenomena, a connection was found between the small slope of the Pomeranchuk trajectory and the small cross section for diffractive dissociation.

PROTON-ANTIPROTON ANNIHILATION IN A MULTIPERIPHERAL MODEL

G. F. Chew and A. Pignotti

Work is under way for the comparison of a multi-Regge model with experimental information on proton-antiproton annihilation into pions at high energy. The aim is to fit the available data on energy and multiplicity dependence of the cross section and various more-detailed distributions with a small number of parameters. This work will provide a test for the extended Dolen-Horn-Schmid duality.

MULTI-REGGE UNITARITY

Carleton DeTar*

The unitarity relation in the channel in which the center-of-mass energy is asymptotically large has been considered in the multi-Regge approximation. The equation places constraints on the Regge parameters. The contributions from intermediate resonances are accounted for through the duality concept. This greatly simplifies enumeration of the communicating inelastic channels. A numerical integration of the n-body inelastic contributions to elastic unitarity is in progress to investigate the feasibility of using the multi-Regge unitarity relation to determine the slope and coupling of the Pomeranchuk trajectory in terms of the parameters of Regge trajectories which participate in the dominant inelastic channels.

A REGGE POLE MODEL WITH THE $M = 1$ π IN $\pi^+ p \to \rho^0 \Delta^{++}$ AND $\pi^+ p \to \rho^+ p$

Farzam Arbab and Richard C. Brower

The $M = 1$ residue pion vanishes at $t = 0$ for $\rho\Delta$ production and has a zero near

*NDEA Title-IV fellow.

$t = -1\frac{1}{2} m_\pi^2$ for the $N\bar{N}$ vertex of ρ production. We have fitted the sharp peak in $\rho\Delta$ production at 8 GeV/c with the M = 1 pion interfering with the A_1. Pseudothreshold relations at $t = (m_\Delta - m_N)^2$ are essential to this fit. We have also achieved a fit to the ρ-production data at 8 GeV/c, 4.2 GeV/c, and 2.7 GeV/c with this model. Here the daughter of the A_1 serves to compensate for the zero in the $\pi N\bar{N}$ vertex. In both reactions, we restrict ourselves to amplitudes for the zero helicity ρ by fitting $\rho_{00}\, d\sigma/dt$.

FACTORIZATION, KINEMATIC SINGULARITIES, AND CONSPIRACIES

F. Arbab and J. D. Jackson

A thorough investigation of the factorization of residues of a pole of the S matrix has been made, with special attention to questions of spin, kinematic singularities of the relevant amplitudes (especially at t = 0) and various types of conspiracy. Factorization is a statement of the form $\beta_{ba}^2 = \beta_{aa}\,\beta_{bb}$, where the β's are the residues of the pole in the full partial-wave amplitude. In general, β can be written as $\beta = K\gamma$, where K contains threshold behavior plus the standard kinematic singularities of the Hara-Wang type, and γ is the reduced residue. The reduced residues are analytic in the neighborhood of thresholds and pseudothresholds, but may, in the case of conspiracies, contain poles at t = 0. The factors K are exhibited in a compact and consistent fashion for all the mass classes $[m_a \neq m_a',\ m_b \neq m_b'(U \to U);\ m_a = m_a',\ m_b \neq m_b'(E \to U);\ m_a = m_a',\ m_b = m_b'(E \to E')]$. We have shown that for $U \to U$ the reduced residues satisfy factorization in the form $\gamma_{ba}^2 = \gamma_{aa}\,\gamma_{bb}$, but that for $E \to U$ or $E \to E'$ there may be additional powers of t.

Various examples have been discussed to illustrate the use of factorization. These include LeBellac's argument on the behavior of the pion residues at t = 0, its circumvention with a type-II conspiracy, the M = 1 pion, (type III conspiracy) and Mandelstam's derivation of the Adler self-consistency condition, and requirements of factorization on the "dynamic zero" of the pion's residue in photoproduction and n-p charge-exchange scattering.

NONEXISTENCE OF KRONECKER DELTAS IN ANGULAR MOMENTUM FOR STRONG PROCESSES

Chung-I Tan

Contrary to the claim of D. J. Gross and H. Pagels,[1] we have given arguments showing that conspiracy relations are consistent with analyticity in the J plane for the definite signatured partial-wave amplitudes. Consequently, no Kronecker deltas are required for strong processes.

The key point is that conspiracy relations involve only <u>physical</u> helicity amplitudes. For definiteness, consider the case of I = 0, $\pi\pi \to \rho\rho$. A conspiracy relation will be of the form $\sum_i \lambda_i F_i(z_t,\ t = 0) = 0$. However, the corresponding conspiracy relations for the conventionally defined "definite" signatured amplitudes will be $\sum_i \lambda_i F_i^{(t)}(z_t,\ t = 0) = f(z_t,\ t = 0)$, where $f(z_t,\ t = 0)$ is a polynomial in z_t with "wrong" symmetry. The presence of this polynomial, which was left out in Ref. 1, will remove the necessity for the existence of Kronecker deltas.

---

1. D. J. Gross and H. Pagels, Phys. Rev. Letters <u>20</u>, 961 (1968).

SYMMETRY OF THE SCATTERING AMPLITUDE AT $t = 0$

Kuo-Hsiang Wang

The symmetry of the four-line-connected pairwise-equal-mass scattering amplitude at $t = 0$, based on the Regge theory, was investigated. At $s > (m + m')^2$ or $s < (m - m')^2$, the symmetry groups of the t channel at $t = 0$ is $0(2, 2)$, instead of the Lorentz group. The relation between the $0(2, 2)$ the Toller amplitudes (Lorentz-group expansion) was discussed. The unitary, irreducible representation of $0(2, 2)$ and its expansion of the t-channel amplitude at $t = 0$ were obtained. The analytical continuation from the $0(2, 2)$ to the $0(4)$ amplitude which Freedman and Wang obtained, is in progress.

POMERANCHON AS A NONSENSE-CHOOSING REGGE TRAJECTORY

Chung-I Tan

We have introduced the notion of a Nonsense-Choosing Regge Trajectory (NSCRT), and investigated the interesting consequences of the conjecture that the Pomeranchon is a NSCRT.

A NSCRT is a Regge trajectory which chooses nonsense at every physical value of angular momentum J. For the case of Pomeranchon, they are at $J = 0, 2, 4, \cdots$. Consequently, no physical particles (stable or unstable) lie on the Pomeranchuk trajectory.

The particular interest of this conjecture lies in its consequence both in the high-energy Regge representation and in the peculiar role the Pomeranchon plays in bootstrap dynamics. We have shown that a NSCRT will not participate in producing Mandelstam cuts. Mandelstam cuts involving the Pomeranchon will not exist; thus removing the existence of essential singularities at $J = \alpha_i(0)$ for any Regge trajectory $\alpha_i(t)$.

Since there are no physical particles on the Pomeranchon, it is possible to explain why finite energy sum rules in the resonance approximation do not yield good results for the Pomeranchon contributions. This is because, in classical language, the Pomeranchon does not give rise to Yukawa forces; consequently no bound states or resonances are formed.

Difficulties associated with the Pomeranchon are by no means solved by this conjecture.[1,2] It, however, shifts the emphasis and points out possible new approaches to the solution of the Pomeranchon problem. One question not touched by this conjecture is why the slope of the Pomeranchon is small.

π EXCHANGE AND FACTORIZATION

Gordon A. Ringland* and Robert L. Thews

The reaction $\pi N \to \rho N$ has been analyzed in terms of the exchange of π and π' trajectories. We find that it is not possible to fit the data with a substantial π contribution if the constraints due to factorization are included and if the zero in the π residue function required for np charge exchange is to be preserved. However the combination of a small π contribution to $\pi N \to \rho N$, and a large π contribution to $\pi N \to \rho\Delta$ has, via factorization, implications

1. G. F. Chew, The Pomeranchuk Trajectory: Actuality or Mirage?, Comments Nucl. Particle Phys. 1, 121 (1967).
2. J. Finkelstein and C-I Tan, Is the Pomeranchon a Fixed Pole?, Phys. Rev. Letters 19, 1061 (1967).

*Miller fellow.

for the reactions $NN \to N\Delta$, $NN \to \Delta\Delta$. On the basis of a preliminary analysis, we anticipate considerable problems in reconciling the above models and reactions.

UNITARITY AND FINITE ENERGY SUM RULES

Farzam Arbab

Unitarity, analyticity, Regge asymptotic behavior, and a resonance approximation have been combined to derive a new sum rule. The sum rule is very convergent; the contribution of high-mass resonances is suppressed by a decreasing weight function. The spin-flip and non-spin-flip residues of the ρ meson in the $\pi\pi \to N\bar{N}$ amplitude were evaluated at the mass of the π, and in conjunction with the first-moment finite-energy sum rule a calculation of the ρ-meson mass was performed. The results are in good agreement with experiment. The sum rule was then applied to the calculation of the ρ and f_0 resonance parameters in the $\pi\pi \to \pi\pi$ amplitude. The behavior of the sum rule near the elastic threshold was also studied in order to get some insight into the nature of the approximations involved in the derivation of the sum rule. This is being submitted as a doctoral thesis.

FINITE-ENERGY SUM RULES FOR BACKWARD PION-NUCLEON SCATTERING

Huan Lee

We have applied the finite-energy sum rules (FESR) to the πN-scattering amplitudes with baryon trajectory exchanges in the u channel. Sum rules with two different moments were taken for the $I = 1/2$ and $I = 3/2$ exchanges; the u values were fixed at the pole positions of N and Δ, respectively. The amplitude used in the "left-hand side" of the sum rules is represented by N, Δ, ρ, and f_0 in narrow resonance approximation.

For the B-amplitude sum rules, the three coupling constants for Δ, ρ, and f_0 have been calculated in terms of $g^2_{\pi NN}$ with a reasonable cutoff. The coupling constant for $\Delta(\rho)$ agrees very well with the experimental value (the estimate from universality) within the error intrinsic to the FESR. Since we have an overdetermined system, we can actually solve for the cutoff, which turns out to be at a quite acceptable value.

For the A-amplitude sum rule, good results can not be obtained with the same set of pole and resonances as used for the B amplitude. We believe a large $\pi\pi$ s-wave, which does not enter in the B amplitude, will be very important in the A amplitude. Study about this point is in progress.

SELF-CONSISTENT COUPLINGS OF THE 1^- AND 2^+ NONETS TO THE 0^- MESONS

Christoph Schmid and Joel Yellin

Considering $PP \to PP$ scattering ($P = 0^-$ meson), and using finite-energy sum rules (FESR),[1] we have computed the couplings PPV and PPT of the 1^- and 2^+ nonets. Taking degenerate masses for each J^P, we have shown that the existence of the observed resonance is consistent with our equations, and we have proved that the observed 0^-, 1^-, and 2^+ multiplets

1. R. Dolen, D. Horn, and C. Schmid, Phys. Rev. 166, 1768 (1968); K. Igi and S. Matsuda, Phys. Rev. Letters 18, 625 (1967); A. Logunov, L. D. Soloviev, and A. N. Tavkhelidze, Phys. Rev. Letters 24B, 181 (1967).

must have SU(3) symmetric couplings. In addition we have shown that self-consistency requires a definite ratio of singlet to octet coupling for the 2^+ nonet. Next, using the observed masses we computed the broken couplings. In principle, we have here a bootstrap theory of SU(3) and its breaking. We obtain couplings reasonably in agreement with experiment.

PARTIAL WIDTHS OF A HEAVY BOSON, $T(2250) \to \pi\pi$, $N\bar{N}$

Christoph Schmid

The wealth of experimental information about the high-mass N^* resonances in the $\pi N \to \pi N$ channel have been used to get predictions about the dominant high-mass resonances in the crossed channel, $N\bar{N} \to \pi\pi$. In particular we considered the T resonance at 2250 MeV with $J^P = 5^-$ (?), and we obtained $\Gamma_{N\bar{N}} = 3$ MeV, $\Gamma_{\pi\pi} = 18$ MeV. The tools are finite-energy sum rules. The validity of the resonance saturation model and of the extrapolation to large positive t has been discussed.

SELF-CONSISTENT SYMMETRY PROPERTIES OF FINITE-ENERGY SUM RULES

Christoph Schmid and Joel Yellin
with Joel Shapiro and Khalil Bitar (U. C. - Berkeley)

The SU(3) properties of finite-energy sum rules in the mass nondegenerate case have been investigated. We are attempting to deduce the relationship between the directions of mass splitting and of coupling breaking in unitary space, as required by the finite-energy sum rules.

SYMMETRIES OF SELF-CONSISTENT TRILINEAR MESON COUPLINGS

Christoph Schmid and Joel Yellin

We have extended our previous considerations of $PP \to PP$ ($P = 0^-$ meson) scattering to the process $MM \to MM$ ($M = 0^-, 1^-, 2^+$ meson) where all particles now participate both externally and internally. Under particular dynamical assumptions we are now able to derive definite algebraic properties of the trilinear (MMM) couplings in the degenerate limit. In the nondegenerate limit we have computed the broken MMM couplings and compared them with experiment.

DAUGHTERS, CONSPIRACIES, AND LORENTZ SYMMETRY

Khalil M. Bitar (U. C.-Berkeley) and Graham L. Tindle*

We have generalized to the arbitrary-spin case the Freedman-Wang prescription for the introduction of daughter trajectories. The daughter problem was investigated within the frame-work of Lorentz symmetry, and a Regge-type representation for the asymptotic S matrix was obtained which satisfies all kinematic constraints. The representation is found to be equivalent to a Lorentz pole expansion in the case of elastic scattering.

Some properties of the representations of the covering groups of the homogeneous Lorentz group and rotation group also were investigated.

---

*NATO fellow.

A NEW ASYMPTOTIC EXPANSION OF THE S MATRIX

Graham L. Tindle*

A decomposition of the asymptotic S matrix for particles with arbitrary masses and spins was examined which gives not only the usual Regge behavior for s-channel helicity amplitudes for u, $t < 0$ with s large, but also gives a simple s^{α} power behavior for all values of t and u and automatically satisfies all kinematic constraints.

FINITE WIDTHS AND ANGULAR DISTRIBUTIONS

Gordon A. Ringland† and Robert L. Thews

The effect on the angular distribution of averaging over finite widths in double-resonance production has been investigated. In particular the reaction $\pi N \rightarrow \rho\Delta$ has been discussed quantitatively in a simple pole model. We found that at 4 GeV/c the averaged distribution (presented as a function of $t' = t - t_{min}$ for each event) was about 20% larger at $t' = 0$ than the central mass distribution, though both distributions were approximately the same at half width. As expected, the effect was roughly proportional to $1/P_{lab}$, falling to a 10% discrepancy at 8 GeV/c.

RELATIONS BETWEEN SPIN DENSITY MATRIX ELEMENTS

Gordon A. Ringland† and Robert L. Thews

Work was completed with the analysis of vector and tensor meson production from πN and KN initial states, and Δ production from πN and NN initial states. Results indicate that the small-angle data on $NN \rightarrow N\Delta$ cannot be explained by π exchange alone, and the 8-GeV/c data on $\pi N \rightarrow \pi\Delta$ suggest the existence of contributions in addition to ρ exchange.

HIGH-ENERGY PHOTOPRODUCTION WITH POLARIZED PHOTONS

Robert L. Thews

Previous work has been extended to study the general reaction polarized photon + nucleon → meson + baryon. General expressions for the differential cross section, as well as individual and joint decay distributions are presented. In the Regge-pole exchange model, circular polarization provides a test for the presence of two or more exchange contributions, while linear polarization discriminates between exchanges with opposite J-parity. Applications include tests for coupling-constant ratios in vector-meson photoproduction, and an investigation of the conspiracy model in pion photoproduction.

EFFECTS OF PSEUDOTHRESHOLD CONSTRAINTS ON REGGE FITS

Robert D. Mathews

Work has continued on determining the practical importance of threshold and pseudothreshold kinematic constraints for Regge formulas. The particular reactions being investigated are $\pi^+ \rightarrow \pi^0\Delta^{++}$, $\pi^+p \rightarrow \eta\Delta^{++}$, $K^+p \rightarrow K^0\Delta^{++}$. These reactions are characterized by having few exchange Regge poles and yet having a t-channel $\bar{p}\Delta$ pseudothreshold close to the physical

*NATO fellow.
†Miller fellow.

region (namely at $t = +0.09$). The kinematic constraints on the helicity amplitudes at this pseudothreshold involve both the relative magnitudes of the amplitudes as well as the derivatives of these amplitudes.

These reactions are being examined to see if these constraints seem to be satisfied naturally by the data, and (or) if imposition of these constraints can reduce the number of arbitrary parameters in the Regge formulas without significantly increasing the chi-square of a fit to the data.

HADRON SUM RULES FROM SU(3) ⊗ SU(3) CURRENT ALGEBRA

Ronald Christensen

Sum rules relating coupling constants and masses for the S, P. V. A. and T meson octets were studied based on SU(3) ⊗ SU(3) commutation relations between two charges and between a charge and the four-divergence of a current. Restricting 3-particle couplings to those which include at least one pion, and assuming saturation by the known particles and resonances (up to spin 2), the sume rules were found to be not well satisfied by the experimental partial decay widths.

CURRENT ALGEBRA AND LOW-ENERGY MESON-BARYON SCATTERING

Perry Shers

We are reexamining the current algebra calculations of meson-baryon scattering with the view of incorporating the heretofore largely ignored constraints imposed by unitarity and analyticity. To this end, within the context of certain physically reasonable models, the connection between calculations for massless and massive external mesons is being studied. Preliminary results on elastic pion-nucleon scattering are encouraging, and work is presently underway on the complete octet-octet broken SU(3) calculation.

BOOTSTRAP SOLUTIONS OF THE BETHE-SALPETER EQUATION

William B. Kaufmann

Solutions to the Bethe-Salpeter bootstrap equations have been found in the sense that the exchanged particle and the composite state have the same mass and coupling to the constituent particles. The solution predicts an $\eta\eta$ bound state at approximately $1.9\ m_\eta$. This is perhaps the $\eta_V(1070)$ meson. A two-channel calculation ($K\bar{K}$ as second channel) would allow η_V to be interpreted as a Dalitz-Tuan-type resonance. If the constituent particles are assumed to be pions, an $I = 0$ scalar meson is predicted at approximately $1.6\ m_\pi$, but an $I = 2$ meson which does not participate in the bootstrap is also obtained.

TWO-CHANNEL CALCULATIONS WITH THE BETHE-SALPETER EQUATION

William B. Kaufmann

We have written a two-channel Bethe-Salpeter equation in matrix form and proven its unitarity up to the first three-body inelastic threshold. A Schwinger-type variational principle is written for the K matrix, trial functions chosen, and some example solutions computed. The results are expressed in terms of channel phase shifts and the elasticity parameter. Of

particular interest is the example in which a bound state of the upper channel is placed in the region between thresholds. As the coupling between channels is turned on, an s-wave (Dalitz-Tuan-type) resonance is thus generated.

REGGE-POLE FORMALISM FOR PIONIC DISINTEGRATION OF THE DEUTERON

Huan Lee

The reaction $\pi^+ + d \rightarrow d + p$ has been investigated within the framework of Regge-pole theory.

Though only data at moderately high energies for this reaction are available, they already show the presence of Regge behavior corresponding to nucleon-trajectory exchange. We Reggeize the amplitudes and give the formula suitable for phenomenological fitting. The asymptotic behavior of the amplitudes at the zero momentum-transfer point is also discussed.

We calculate the discontinuity of the d-p-n residue function across the anomalous cut, and evaluate it by approximation in terms of the π-N-N residue function. The method used, which is analogous to the one employed by Cutkosky in calculating the deuteron form factor, can be applied to many other cases.

Various models have been proposed by previous authors for studying this reaction at low energies. These models are related to the Regge model in a coherent picture by means of the duality concept recently emphasized by Chew and Pignotti.

This work is being submitted as a doctoral thesis.

STUDY OF INELASTIC EFFECTS IN P_{11}-STATE πN SCATTERING

Kwok Maw Ong

We have found that the Optimal Determinantal Approximation, as proposed in an earlier paper, leads to accurate solutions for the ND^{-1} equations of πN scattering in the P_{11} state. Both left-hand and right-hand cutoff procedures were used in the formulation of the problem, with similar results. Inelasticity was treated by a method proposed by Froissart. We have shown that a qualitatively correct πN P_{11} phase shift in the low-energy region may be reproduced in a one-channel calculation without CDD poles, provided that the inelasticity factor is chosen properly. A two-channel model with the (πN^*) as the second channel was discussed and it has been shown that the inelasticity obtained in a rough approximation to the coupled unitarity relations is adequate in generating the "zero" of the P_{11} phase shift. Some implications concerning the nonequivalence of one-channel and multichannel ND^{-1} formalisms were discussed. This work is part of a doctoral dissertation submitted to the Graduate Division of the University of California.

SEPARABLE POTENTIAL FITS TO NUCLEON-NUCLEON SCATTERING DATA

Thomas R. Mongan

Three different families of separable potentials have been fitted to the Arndt-MacGregor (Livermore) nucleon-nucleon phase shifts through $J = 4$. We have demanded that our potentials lead to partial-wave scattering amplitudes with driving singularities that lie on the negative

real energy axis.[1]

NUCLEON-NUCLEON SCATTERING POTENTIAL

Judith Binstock

An equivalent potential was calculated for nonrelativistic nucleon-nucleon spin-singlet scattering. The contribution to the potential from uncorrelated two-pion exchange, based on the results of Furuichi,[2] was shown to give the intermediate-range force required. With the single-pion-exchange potential added, the experimental $^1P_1$, $^1D_2$, $^1F_3$, and $^1G_4$ phase shifts are reproduced up to those energies where the exchange of higher-mass systems become significant. Thus the necessity of postulating an I = 0 scalar sigma is removed. In addition, a good fit at higher energies may be obtained by including rho and omega exchange. Work is in progress checking the results of Ref. 1.

GENERAL THEORETICAL PHYSICS

ANALYSIS OF π-He SCATTERING FOR THE PION ELECTROMAGNETIC FORM FACTOR

Charles T. Mottershead

A measurement of the charge radius of the pion by comparison of π^+ and π^- scattering on He^4 is nearing completion. The elastic cross sections for both signs of the charge are fit simultaneously by a program that uses the logarithmic derivatives of the pion wave functions at the nuclear surface as free parameters. Formulas valid for a very general class of nuclear interaction operators are then used to interpret the difference of the logarithmic derivatives in terms of an effective electrostatic potential weighted by an internal pion wave function that meets the observed boundary conditions. The method is relatively independent of the model chosen to represent the strong pion-nucleus interaction, and has been applied to data at four different beam energies. The results consistently indicate a surprisingly large pion charge radius of approximately 2.3 fermis.

S-OPERATOR THEORY OF WEAK INTERACTIONS

Willy Bierter*

We have constructed from the S matrix in the Dirac picture a general expression for the S operator. We give the conditions that lead to an earlier proposed special case of this theory by Pietschmann and Nilsson.[3] Although this theory is unitary, i.e. the cross section for elastic electron-neutrino scattering does no more exceed the unitarity limit at higher energies, it has several drawbacks. There is still an infinite parameter left which, in principle, can be absorbed in a coupling-constant renormalization analogously to the wave function renormalization in quantum electrodynamics. Also this theory is only crossing-symmetric, if we sum

1. Thomas R. Mongan, Separable Potential Fits to Nucleon-Nucleon Scattering Data (Ph. D. thesis), UCRL-18161, May 23, 1968.
2. Susumi Furuichi, Progr. Theoret. Phys. (Kyoto) Supplement 39, 190 (1967).
*Swiss National fellow.
3. H. V. R. Pietschmann and J. S. Nilsson, Consistent Theory of Weak Interactions, Phys. Rev. 142, 1173 (1966).

over an infinite number of graphs.[1]

LOW-ENERGY NUCLEAR PHYSICS

EQUILIBRIUM CONFIGURATIONS OF A CHARGED CONDUCTING DROP

Wladyslaw J. Swiatecki and Chin-Fu Tsang

We are continuing our investigation into the theory of fission of a charged conducting drop. This was started in connection with experimental work in the Nuclear Chemistry Division on the disintegration of charged droplets. The experiments and theory will serve as an analogue study of nuclear fission.

Since the last progress report, we have pushed our calculations of saddle-point configurations of a charged drop to a seventh order of approximation. The convergence is very good for a large intensity of electrification of the drop (i. e., when the so-called fissility parameter x is close to 1). It is also good for small electrification ($x \lesssim 0.7$). For intermediate electrification ($0.8 < x < 0.93$) the convergence is rather poor. The results up to now seem to indicate that for x close to 1 we have symmetric saddles, i. e., reflection symmetric configurations that are unstable with respect to one deformation coordinate and stable to all others. For small x (< 0.85) the symmetric shapes are unstable in two deformation coordinates. Also, for x around 0.9, we have three symmetric equilibrium configurations. The last result is not firmly established due to the poor convergence of successive approximations in this region. We are now looking at a new way of parameterizing the shape of the droplet, which is expected to give better convergence with fewer deformation parameters.

GROUND-STATE MASSES OF EVEN-EVEN NUCLEI

Chin-Fu Tsang

Work is in progress, in collaboration with Professor S. G. Nilsson of the Nuclear Chemistry Division, to calculate the ground-state masses of all even-even nuclei from the rare earth isotopes to the actinides with the additional aim of going beyond the actinides into the superheavy region.

We believe that the shell-model calculations give the local mass variations, in particular, those associated with the magic numbers, but the smooth trend is better represented by the liquid-drop model. The shell-structure calculations are based on a deformed harmonic-oscillator potential with $s\text{-}\ell$ (spin-orbit) and ℓ^2 couplings. This potential is studied in terms of two distortion parameters describing elongation and neck formation. The local shell-structure variations are extracted by subtracting from the results an average energy obtained by using a prescription suggested by Strutinskii. This shell-structure variation is then added to the liquid-drop energy. The liquid-drop parameters employed are those of the Myers and Swiatecki mass formula. Pairing effects are also included in these calculations by applying the BCS model to the energy levels obtained from the shell calculations. A minimization of the total energy with respect to the two distortion parameters gives equilibrium shapes and masses.

1. Willy Bierter, S-Operator Theory of Weak Interactions, UCRL-18147, March 27, 1968.

The masses thus obtained give the trend of the experimental masses extremely well. We have also calculated the odd-even mass differences, which reproduce the experimental values to within a standard error of 100 keV.

AVERAGE NUCLEAR PROPERTIES

William D. Myers and Wladyslaw J. Swiatecki

A generalized treatment of average nuclear properties has been prepared for publication. The theory is developed on two levels: First a refinement of the liquid-drop model, called the droplet model, is presented. The droplet-model potential energy is derived by expanding the volume, surface, and Coulomb energies in Taylor series around the standard liquid-drop model values. Minimizing the energy with respect to density variations leads to equations, in closed form, for neutron and proton radii, the central depression, and the binding energy.

The second level at which average nuclear properties are treated is based on assuming a concrete model of a two-component saturating system consisting of neutrons and protons, interacting by velocity-dependent Yukawa forces (and Coulomb forces). When this model is treated in the Thomas-Fermi approximation, a pair of coupled integral equations results which can be used as the basis of a self-contained model of all average static nuclear properties.

The applications of the droplet model and the Thomas-Fermi model that are discussed include predictions concerning neutron and proton radii (in particular the presence of a neutron skin), the isotope effect in proton radii, compression of the nucleus by surface tension and dilatation by Coulomb energy, and the central depression caused by Coulomb repulsion. Calculations are made for the surface-curvature correction, for the surface-symmetry energy, for a modification to the volume symmetry energy for large neutron excess, and a revised estimate is made for the value of the symmetry energy of nuclear matter. Also treated is the question of whether or not neutron matter is bound, and some discussion is given of the spatial distribution, the energy dependence and the composition dependence to be expected for nuclear optical model potentials on the basis of the statistical methods used in this paper.

MANY-BODY PHYSICS

QUASILINEAR EVOLUTION OF THE WEIBEL-KAHN INSTABILITY

Norman Albright

The evolution of the Weibel-Kahn instability was studied using the quasilinear approximation based on the Vlasov equation. Starting with a temperature-anisotropic plasma, unstable waves grow up, causing the particle-diffusion coefficient to become large. Particle diffusion proceeds rapidly at first, and then slower and slower as temperature isotropy is approached. Simultaneously the wave spectrum shifts to lower and lower frequencies, and eventually decays by nonlinear processes. The nonlinear decay is now being studied.

N-BODY FADDEEV EQUATIONS AND THE CLUSTER EXPANSION*

Willy Bierter†

Using a theorem by Hugenholtz we have derived a set of integral equations of the Faddeev type for the N-particle scattering amplitude. These equations are of the Fredholm type, since the squares of the kernels, which depend only upon the scattering amplitudes for less than N particles, have no δ functions. This Faddeev theory for the N-body scattering problem then provides a closed theory for the cluster coefficients of an arbitrary quantum gas, which is free of convergence difficulties encountered in former series expansions such as, e.g., the binary collision expansion of Lee and Yang.

BOLTZMANN EQUATION FOR POLYATOMIC GAS

Warren Wollman

A modification of the Boltzmann equation due to the presence of internal rotational states has been obtained by finding a suitable generalization of the Wigner function and using scattering theory to construct the equation of change. We have obtained a justification for the Wang Chang-Uhlenbeck equation. Its connection with the Snider-Waldmann equation has been studied. A generalization of the overall technique is being pursued to account for three- and four-body effects.

ACCELERATOR THEORY

COMPUTATIONS CONCERNING NONLINEAR, AREA-PRESERVING ALGEBRAIC EQUATIONS

L. Jackson Laslett

Computational work to investigate and illustrate the properties of nonlinear algebraic transformations was mentioned in the preceding Semiannual Report. The results of this work were described on January 16 at the Courant Institute of Mathematical Sciences at New York University during a Conference on Mathematical and Computational Problems in Accelerator Design organized by Professors Jürgen Moser and Peter Lax. Subsequent work on this subject has been directed to study of transformations of the class discussed by E. M. McMillan.[1]

COLLECTIVE ION ACCELERATOR

L. Jackson Laslett and A. M. Sessler

Theoretical and computational studies relating to the collective ion accelerator (or electron-ring accelerator, ERA) have been in progress and are continuing. Recent work has been directed toward assisting in the engineering design of an experimental model of such an accelerator. A substantial portion of this work was performed prior to or during the Symposium

---

*Willy Bierter, N-Body Faddeev Equations and the Cluster Expansion, UCRL-18102, February 19, 1968.

†Swiss National fellow.

1. E. M. McMillan, Some Thoughts on Stability in Nonlinear Periodic Focusing Systems, UCRL-17795, September 5, 1967, and Addendum, March 29, 1968.

and Working Conference on Electron Ring Accelerators that was held at LRL Berkeley in February of this year, and reports of this work are included in the Proceedings of that Conference.[1]

PUBLICATIONS AND PAPERS

1. M. K. Au-Yang, A Method of Calculating the Axial Vector Current Coupling Constants for Leptonic Decays of Baryons, UCRL-18192, April 1968; submitted to the Phys. Rev.
2. G. F. Chew, Closure, Locality, and the Bootstrap, UCRL-17940, Nov. 1967; Phys. Rev. Letters 19, 26 (1967).
3. G. F. Chew and A. Pignotti, Dolen-Horn-Schmid Duality and the Deck Effect, UCRL-18124, March 1968; Phys. Rev. Letters 20, 1078 (1968).
4. C. B. Chiu, R. J. Eden, and C-I Tan, Phase Contours of Scattering Amplitudes, UCRL-17921, Nov. 1967.
5. C. B. Chiu, R. J. Eden, and C-I Tan, Phase Contours of Collision Amplitudes, UCRL-17952, Nov. 1967, Phys. Rev. Letters 20, 406 (1968).
6. C. B. Chiu, R. J. Eden, and C-I Tan, Phase Contours of Scattering Amplitudes. I. Phase Contours, Zeros, and High-Energy Behavior, UCRL-17899, Oct. 1967; Phys. Rev., to be published.
7. R. C. Christensen, Is There a Lepton Octet?, Il Nuovo Cimento 52A, 1038 (1967).
8. E. D. Courant, L. W. Jones, B. W. Montague, E. M. Rowe, and A. M. Sessler, Bypass-Storage Ring Option for NAL, Nucl. Instr. Methods 60, 29 (1968).
9. E. D. Courant, E. Keil, and A. M. Sessler, Improvement Possibilities in the Performance of the CERN Intersecting Storage Rings, in Proceedings of the Sixth International Conference on High-Energy Accelerators, 1967 (Cambridge Electron Accelerator, Cambridge, Mass., 1967), p. A-163.
10. R. J. Eden and C-I Tan, Phase Contours of Scattering Amplitudes. II. Crossing Symmetry, Resonance Poles, and High-Energy Behavior, UCRL-17922, Dec. 1967; Phys. Rev. to be published.
11. R. J. Eden and C-I Tan, Phase Contours of Scattering Amplitudes. III. High-Energy Behavior at Fixed Angles, UCRL-17923, Dec. 1967; submitted to Phys. Rev.
12. M. B. Halpern and D. Atkinson, Construction of Solutions to Superconvergence Relations, Phys. Rev., to be published.
13. M. B. Halpern, K. Bardakci, and Y. Frishman, Structure and Extension of a Theory of Currents, Phys. Rev., to be published.
14. John Harte, Possible Enhancement of Two-Photon Exchange Effects in Large-Momentum-Transfer Electron-Proton Scattering, UCRL-18083, Jan. 1968; Phys. Rev., to be published.
15. John Harte, The Asymptotic Vertex Function in a Crossing Symmetric Bootstrap Model of the Hadrons, UCRL-18122, Feb. 1968; Phys. Rev., to be published.
16. J. D. Jackson and G. E. Hite, Kinematic Singularities and Threshold Relations for Helicity Amplitudes, UCRL-17959, Nov. 1967, Phys. Rev. 169, 1248 (1968).

---

1. Symposium on Electron Ring Accelerators, UCRL-18103, February 1968.

17. William B. Kaufmann, Regge Trajectories by the Schwinger Variational Principle, Phys. Rev. 164, 1991 (1967).
18. William B. Kaufmann, Bootstrap Solutions of the Bethe-Salpeter Equation, UCRL-18069, Feb. 2, 1968.
19. E. Keil and A. M. Sessler, Performance Capabilities of Proton Storage Rings, in Proceedings of the Sixth International Conference on High-Energy Accelerators, 1967 (Cambridge Electron Accelerator, Cambridge, Mass., 1967), p. 77.
20. S. Mandelstam, Dynamics Based on Rising Regge Trajectories, Phys. Rev. 166, 1539 (1968).
21. C. Pellegrini and A. M. Sessler, "Effect of Coherent Radiation During Ring Compression," in Symposium on Electron Ring Accelerators, UCRL-18103, Feb. 1968, p. 442.
22. C. Pellegrini and A. M. Sessler, Curvature Effects and the Shape of Bunches in Electron Storage Rings, Il Nuovo Cimento 53B, 198 (1968).
23. C. Pellegrini and A. M. Sessler, Transverse Coherent Beam Phenomena in Colliding Beam Devices, Proceedings of the Sixth International Conference on High Energy Accelerators, 1967 (Cambridge Electron Accelerator, Cambridge, Mass., 1967), p. 135.
24. W. Rarita, R. J. Riddell, Jr., C. B. Chiu, and R. J. N. Phillips, Regge Pole Model for πp, pp, and $\bar{p}p$ Scattering, UCRL-17523, April 1967; Phys. Rev. 165, 1615 (1968).
25. G. A. Ringland and R. L. Thews, Production Mechanisms and Relations Between Spin Density Matrix Elements, UCRL-18010, Dec. 1967, Phys. Rev., to be published.
26. Christoph Schmid, Meson Bootstrap With Finite-Energy Sum Rules, UCRL-18009, Dec. 1967, Phys. Rev. Letters 20, 628 (1968).
27. Christoph Schmid, Direct-Channel Resonances from Regge-Pole Exchange, UCRL-18048, Jan. 1968, Phys. Rev. Letters 20, 689 (1968).
28. C. Schmid and J. Yellin, Self-Consistent Couplings of the 1^- and 2^+ Nonets to the 0^- Mesons, UCRL-18142, March 25, 1968; Phys. Letters, to be published.
29. A. M. Sessler, "Touschek Phenomenon in the ERA," in Symposium on Electron Ring Accelerators, UCRL-18103, Feb. 1968, p. 431.
30. A. M. Sessler and V. G. Vaccaro, Passive Compensation of Longitudinal Space Charge Effects in Circular Accelerators: The Helical Insert, CERN 68-1, January 15, 1968.
31. A. M. Sessler, "The Electron Ring Accelerator: General Concepts and Present State of Theoretical Understanding," in Symposium on Electron Ring Accelerators, UCRL-18103, Feb. 1968, p. 11.
32. A. M. Sessler, "Guide to the Technical Reports: An Introduction and a Summary," in Symposium on Electron Ring Accelerators, UCRL-18103, Feb. 1968, p. 137.
33. A. M. Sessler, Selected Technical Sections from "Acceleration by the Coherent Field of an Electron Ring: Proposal for an Accelerator Development Study," in Symposium on Electron Ring Accelerators, UCRL-18103, Feb. 1968, p. 164.
34. A. M. Sessler, "A Rather Different Set of Parameters," in Symposium on Electron Ring Accelerators, UCRL-18103, Feb. 1968, p. 186.
35. A. M. Sessler, "Parameters, Parameters, Parameters," in Symposium on Electron Ring Accelerators, UCRL-18103, Feb. 1968, p. 191.
36. H. P. Stapp and J. Wright, On Integral Representations for N-Particle Functions, UCRL-17861, Sept. 1967; Il Nuovo Cimento, to be published.

37. R. M. Diamond, A. M. Poskanzer, F. S. Stephens, W. J. Swiatecki, and D. Ward, Potential Energy Effects in Heavy-Ion Transfer Reactions, UCRL-18013, Jan. 1968; Phys. Rev. Letters 20, 802 (1968).

EXPERIMENTAL PHYSICS

Luis W. Alvarez in charge

I. BUBBLE CHAMBER EXPERIMENTS

A. ASSOCIATED PRODUCTION EXPERIMENT

Between mid-1960 and mid-1961, the 72-inch hydrogen bubble chamber was exposed to π^+ and π^- beams at six laboratory-system momenta from 1.030 to 1.325 BeV/c. About 1 000 000 pictures were taken, of which 3/4 have been analyzed at Berkeley and the remainder at the University of Wisconsin and Purdue, Johns Hopkins, and Duke Universities. Numerous results from this experiment have been published. In late 1964 an additional 110 000 pictures of π^- incident at five different momenta from 0.910 to 1.030 BeV/c were taken for analysis at Berkeley.

Hyperon Production and Decay

Frank S. Crawford, Jr., and Joseph C. Doyle

We are continuing our detailed study of $\pi^- p \rightarrow \Lambda K^0$ at seven beam momenta between 940 and 1170 MeV/c. We are attempting to perform a phase-shift analysis of this process.

Radiative Pion Production

Frank S. Crawford, Jr., Leroy R. Price, and Ronald A. Grossman

We are continuing our study of the two-prong, four-prong, and six-prong events in πp interactions. We are using primarily events in which the γ ray has materialized in the hydrogen, although events with kinematically determined γ rays are still being analyzed. Our analysis has been extended to cover pion beam momentum from 900 to 1200 MeV/c.

Leptonic Decays of Eta Mesons

Frank S. Crawford, Jr., Leroy R. Price, and Ronald A. Grossman

We are looking for the decay modes $\eta \rightarrow e^+e^-$, $\mu^+\mu^-$, $e^+e^-e^+e^-$, $e^+e^-\mu^+\mu^-$, and $\mu^+\mu^-\mu^+\mu^-$. The etas are produced in the reaction $\pi^\pm p \rightarrow \pi^\pm p\eta$, at pion momenta 1170 and 1030 MeV/c. The analysis is in the preliminary stage, and no results are yet available.

Production of Eta Mesons

Frank S. Crawford, Jr., Leroy R. Price, and Ronald A. Grossman

We have completed our detailed study of the angular distributions and absolute cross sections for etas produced via $\pi^\pm p \rightarrow \pi^\pm p\eta$ at incident pion momenta from 900 to 1200 MeV/c. The final pion-proton system is found to have a large admixture of $N^*(1238)$. In addition a significant amount of I = 1/2 amplitude is present.

Radiative Electroproduction

Frank S. Crawford, Jr., Leroy R. Price, and Ronald A. Grossman

We have initiated a study of the processes $ep \rightarrow ep\gamma$ and $ep \rightarrow ep e^+e^-$, by looking at one- and three-prong events at beam momenta of 1030 and 1170 MeV/c. The analysis is in the preliminary stage, and no results are yet available.

B. π63 EXPERIMENT

The 72-inch hydrogen bubble chamber was exposed to π^- in the momentum range from 1.5 to 4.2 GeV/c. A total of 30 events/μb equivalent was taken between mid-1963 and early 1965. Analysis of the film is virtually complete and the results have now been published.

C. K63 EXPERIMENT

An exposure of the 72-inch hydrogen bubble chamber to a K^- beam having lab momenta of 1.7, 2.1, 2.47, 2.59, 2.64, and 2.73 BeV/c, was made, totaling 30 events/μb. Exposures with deuterium were taken at 2.1 and 2.7 BeV/c, and a run was made at 2.1 BeV/c with a Pb plate in the chamber to convert γ rays, and thus detect neutrals. The film was taken between mid-1963 and early 1965, and, as of May 1968, more than 300 000 events had been measured. Measurement is now nearly completed.

Production and Decay of Cascade Hyperons

Philip M. Dauber and Richard Muller

A systematic study of production and decay of Ξ^- and Ξ^0 has been undertaken. The sample of about 3200 Ξ^- and 1000 Ξ^0 represents roughly half the world supply of analyzed cascade events. Differential cross sections and polarizations have been measured for Ξ^-K^+ and Ξ^0K^0 production, and a partial-wave analysis of Ξ^-K^+ from 1.2 to 2.7 GeV/c is being performed, including data on $K^-n \rightarrow \Xi^-K^0$ from the deuterium run. The data are also being interpreted in terms of a baryon-exchange mechanism. Evidence has been obtained for Y^* formation with subsequent decay into ΞK. A study of resonance production is in progress. Study of the production and decay distributions of Ξ^*, including a complete density matrix determination, should provide new checks of the baryon-exchange hypothesis.

An analysis of the normal $\Lambda\pi^0$ decay of Ξ^0 has been completed, including determination of lifetime and decay asymmetry parameters. Values of $\tau_{\Xi^-} = (1.61 \pm 0.04) \times 10^{-10}$ sec and $\tau_{\Xi^0} = (3.07^{+0.22}_{-0.20}) \times 10^{-10}$ sec have been obtained. These values agree within one standard deviation with the $\Delta I = 1/2$ prediction $\tau_{\Xi^0} = 2\tau_{\Xi^-}$. The asymmetry parameter determination has yielded $\alpha_{\Xi^-} = 0.404 \pm 0.045$, $\alpha_{\Xi^0} = 0.44 \pm 0.08$, $\Phi_{\Xi^-} = -9.5 \pm 10.0^0$, and $\Phi_{\Xi^0} = 19 \pm 17^0$, in good agreement with the $\Delta I = 1/2$ rule and with time-reversal invariance.

A search for leptonic and $\Delta S = 2$ decay modes has been carried out. This search has yielded two unambiguous examples of $\Xi^- \rightarrow \Lambda^0 e^- \bar{\nu}$. These events enable us to quote a value for the branching fraction for this mode of $(1.0^{+1.3}_{-0.65}) \times 10^{-3}$ [reported in Phys. Rev. Letters 20, 465 (1968)]. No clear-cut examples of other unusual Ξ decays have been found, but the upper limits for the $\Delta S = 1$ and $\Delta S = 2$ leptonic and nonleptonic modes of both Ξ^- and Ξ^0 have been reduced to the 10^{-3} level.

Results of the general cascade analysis will be presented in a paper to be submitted to Physical Review. Results of the partial-wave analysis of ΞK and of a study of the Ξ^* production mechanism will be published separately.

The Reactions $K^-p \to \bar{K}^0 n$ and $K^-p \to \Lambda\pi^0$

Stanley M. Flatté, Angela Barbaro-Galtieri, Robert D. Tripp, and Charles G. Wohl

Data analysis, including production-angle distributions, polarization, and total cross sections, has been completed at six incident K^- momenta: 1.7, 2.1, 2.47, 2.59, 2.64, and 2.73 GeV/c. Theoretical analysis is now under way.

The Decay $\omega \to \pi^+\pi^-$

Stanley M. Flatté

A phenomenological analysis technique is being developed for the study of two interfering resonances. The technique is applied to some published data on $K^-p \to \Lambda\pi^+\pi^-$ at 1.5 GeV/c which showed evidence for $\omega \to \pi^+\pi^-$, and to new data at 1.7, 2.1, and 2.6 GeV/c. The new data contain twice as many $\omega \to \pi^+\pi^-\pi^0$ events as the old data.

Production of Σ's in K^-p Interactions

Morris Pripstein and Philippe Eberhard

This study has led to the unambiguous determinations of the spin parity of the $Y^*(1660)$ (it was found to be $3/2^-$), and some determination of the widths of $Y^*(1660)$ and $Y^*(1405)$. Two papers have been written: P. Eberhard, M. Pripstein, F. T. Shively, U. E. Kruse, and W. P. Swanson, Phys. Rev. 163, 1446 (1967), and P. Eberhard and M. Pripstein, Model for the Decay $\Sigma(1660) \to \Sigma\pi\pi$, UCRL-17682, July 1967.

The measurements have been finished, and we are now in the process of making a meaningful study of resonance production in the reactions $K^-p \to \Sigma^\pm\pi^+\pi^0$.

Study of the Reaction $K^-p \to \Sigma^\pm\pi^\mp$

Philip M. Dauber and Angela Barbaro-Galtieri

An analysis of charged $\Sigma\pi$ production by K^- on protons from 2.1 to 2.7 BeV/c is in progress. Total and differential cross sections as well as Σ^+ polarizations are being measured. The data will be fitted to a model including s-channel production of resonances and Regge poles in the t and u channels. The model will be extended below 2.1 GeV/c by using data obtained at Lawrence Radiation Laboratory and University of California, Los Angeles.

The Reaction $K^-p \to K^*_{1/2}(892)\, N^*_{3/2}(1238)$

Jerome H. Friedman and Ronald R. Ross

The reaction $K^-p \to K^*_{1/2}(892)\, N^*_{3/2}(1238)$ has been studied at 2.1 and 2.6 GeV/c. The total cross section, differential cross section, and decay correlation parameters have been measured as a function of production angle, and the results are being compared with the absorptive peripheral model, the Regge pole model, and the quark model.

A Study of K^-p Four-Pronged Reactions

Jerome H. Friedman, Ronald R. Ross, and Allen Kirschbaum

Approximately 48 000 K^-p interactions producing four charged particles have been measured on the spiral reader. These events are currently being analyzed with the aid of the Alvarez group data-reduction computer codes.

K^- Interactions in Deuterium

Angela Barbaro-Galtieri, Maxine Matison, and Alan Rittenberg

The deuterium film of path length 5 events/μb, equally divided between 2.1 and 2.64 GeV/c, has been scanned. Measurements have been made on Franckensteins and the Spiral Reader of 50 000 events of the following topologies: three or four prongs with or without a secondary decay, and one to four prongs with a vee. During this period, special emphasis has been placed on measuring the three-and four-prong with-a-vee events; these measurements are now completed. All ambiguities have been looked at on the scanning table, and the data are now in the final analysis stage.

Search for a charged meson at 960 MeV

No evidence for this meson has been detected, and an upper limit for its production at 2.1 and 2.64 GeV/c is $[K^-n \rightarrow \Lambda\delta^-,\ \delta^- \rightarrow N(\pi)] < 5$ microbarns. In addition, the isospin of the $\eta'(960)$, seen in the hydrogen data decaying into $\eta\pi\pi$ and $\pi\pi\gamma$, is confirmed to be zero [Phys. Rev. Letters 20, 349 (1968)].

Search for a T = 2 hyperon resonance

This part of the experiment is being done in collaboration with SLAC (Chadwick, Guiragossian, Pickup). No evidence for T = 2 resonances in the $\Sigma^-\pi^-$ and $\Sigma^-\pi^-\pi^0$ final states has appeared in the presently available data. In the $\pi^+\pi^-\pi^0$ final state, there is evidence for production of η' decaying into $\pi^+\pi^-\gamma$.

Search for T = 3/2 resonances in the $K\pi$ system

Here, too, the evidence for a higher-isospin state is negative. The other mass combinations in three- and four-prong states are now being searched for production of other resonances.

D. K65 EXPERIMENT

During the period from August 1965 to October 1967, the 25-inch hydrogen bubble chamber was exposed to a K^- beam of about 400 MeV/c. Roughly 1.4 million pictures have been taken, 60 000 of which were in deuterium. The average track density was about 6 K^-/picture. More than 90% of the film has been scanned once, yielding 577 000 events, and about 25% of the film has been rescanned. A total of 370 000 events has been measured; of these approximately 280 000 have been measured on the spiral reader. All the events have been processed on the CDC 6600 computer, and the analysis is in progress.

Study of Σ Decay Parameters

Robert D. Tripp, Frank T. Solmitz, and Roger O. Bangerter

In order to measure the decay parameters γ_+^+, γ_-^-, β_+^+, and β_-^-, we have scanned and

measured roughly 70% of our film for the reactions $\Sigma^{\pm} \rightarrow \pi^{\pm} n$, followed by $np \rightarrow np$. β and γ are determined by the left-right asymmetry in the n-p scattering. We have analyzed about 2 000 events of the above sequence of reactions and will publish the results soon. (R. O. Bangerter et al., Decay Parameters for $\Sigma^{+} \rightarrow n\pi^{\pm}$, paper presented at Heidelberg International Conference on Elementary Particles, 1967.)

We have also analyzed the up-down asymmetry of about 100 000 Σ decays in order to determine the decay parameters α_{+}^{+}, α_{0}^{+}, and α_{-}^{-}.

Σ Interactions and Decays

Lawrence K. Gershwin

Σ^{-} leptonic decay

From the measurement of about 65 000 Σ^{-} decays, 50 have been found that are $\Sigma \rightarrow n e^{-} \bar{\nu}$. From the correlation of the direction of the electron with respect to the polarization of the Σ^{-}, one can determine the relative values of the axial and vector coupling constants. Final results, which have been submitted to Phys. Rev. Letters, show reasonable agreement with Cabibbo theory.

Σ^{-} capture in hydrogen

When Σ^{-} comes to rest in hydrogen, the reaction $\Sigma^{-}p \rightarrow \Sigma^{0}n$ or $\Sigma^{-}p \rightarrow \Lambda n$ occurs. One can investigate the form of the matrix element for $\Sigma^{-}p \rightarrow \Lambda n$ by investigating the correlation of the Λ polarization with respect to the Σ^{-} polarization. About 700 such events have been analyzed; another 300 are expected.

Σ^{-} and Σ^{+} interactions

We can study $\Sigma^{-}p$ and $\Sigma^{+}p$ interactions from 100 to 600 MeV/c incident Σ momentum. Due to the scarcity of events, probably only cross sections can be obtained. About 150 $\Sigma^{-}p \rightarrow \Sigma^{0}n$ and $\Sigma^{-}p \rightarrow \Lambda n$ have been analyzed; another 50 are expected. $\Sigma^{-}p \rightarrow \Sigma^{-}p$ and $\Sigma^{+}p \rightarrow \Sigma^{+}p$ have not yet been measured; about 100 of each are present in our film.

$\Sigma^{+} \rightarrow p\gamma$

About 50 events $\Sigma^{+} \rightarrow p\gamma$ have been found. The decay asymmetry is measured and found to be -1.1 ± 0.55, whereas U-spin invariance would require that the asymmetry parameter be zero.

Σ^{+} Magnetic Moment

Terry S. Mast and Lawrence K. Gershwin

From an analysis of 39 000 decays of the type $\Sigma^{+} \rightarrow p\pi^{0}$, we have made a determination of the Σ^{+} magnetic moment of $\mu_{\Sigma^{+}} = 2.1 \pm 1.0$. A letter on the subject has recently been submitted to Phys. Rev. Letters.

$K^{-}p \rightarrow \Lambda\pi^{+}\pi^{-}$ and $K^{-}p \rightarrow \Lambda +$ Missing Mass

Terry S. Mast, Angela Barbaro-Galtieri, and Robert D. Tripp

After measurement of most of the events of this type and a remeasurement of many events with unsatisfactory fits, we have a sample of 9000 events. The events have been weighted to correct for scanning biases and escape loss, and an analysis of the amplitudes contributing to

this reaction has been begun. Forty-four thousand Λ-missing-mass events have been measured and weights for scanning bias and escape loss have been determined. The polarization and angular distributions of the $\Lambda\pi^0$ part and those of the $\Sigma^0\pi^0$ part have been determined. The $\Lambda\pi^0$ channel is of particular interest, since it is a pure I = 1 state. We have also isolated a signal of some 200 events corresponding to the decay $Y_0^*(1520) \rightarrow \Lambda\gamma$. This is the first reported evidence for the electromagnetic decay of a hyperon resonance.

Study of the Neutral K Meson

Bryan Webber, Frank S. Crawford, Jr., and Margaret Alston-Garnjost

The time distribution of 242 leptonic neutral K decays has been studied. In 142 events the lepton has been identified on the scanning table. No significant violation of the $\Delta S = \Delta Q$ rule has been found either for electronic or for muonic decays. Assuming the validity of the $\Delta S = \Delta Q$ rule, the absolute rate $(K_2^0 \rightarrow \pi + \ell + \nu) = (12.2 \pm 1.0) \times 10^6\ \mathrm{sec}^{-1}$ and the mass difference $|m(K_1^0) - m(K_2^0)| = (0.41 \pm^{0.13}_{0.17}) \times 10^{10}\ \mathrm{sec}^{-1}$ have been determined. About 100 more events should be available from measurements that remain to be analyzed. Final results will be published in the near future.

Charge-Exchange ($K^- p \rightarrow \bar{K}^0 n$) and Elastic ($K^- p \rightarrow K^- p$) Reactions

Terry S. Mast, Roger Bangerter, Angela Barbaro-Galtieri, and Robert D. Tripp

The momentum range of the incident K^- has been extended up to 430 MeV/c. About 28 000 charge-exchange events have been measured with the spiral reader and the Franckenstein and processed through the programs SIOUX-ARROW. The production angular distribution has been analyzed in terms of Legendre polynomial coefficients (A_ℓ/A_0). An accurate measurement of the cross section and angular distributions will be availalbe soon. The elastic events are necessary in order to compute the amplitudes of the two isospin channels. All together 26 000 events of this type have been measured and processed. Their analysis is progressing.

E. π66 EXPERIMENT

Between February and August 1966, 665 000 pictures were taken of π^- incident on deuterium in the 72-inch hydrogen bubble chamber. The momenta ranged from 1.1 to 4.2 GeV/c.

$\pi^+ d$ Interactions from 2.8 to 4.2 GeV/c

Maris A. Abolins, Orin I. Dahl, and Paul Hoch

More than 21 000 events involving a visible Λ^0 or K^0 decay produced by π^+ in the range 2.8 to 4.2 GeV/c colliding with deuterons have been measured and processed. Ionization selection criteria have been used to determine correct hypotheses. For the events measured on the spiral reader, this information was obtained directly from pulse heights; the Franckenstein-measured events were each individually inspected by trained technicians and physicists. Attention is presently being turned to $\Lambda K\pi$ final states in order to gain understanding of the production mechanisms for $Y_1^*(1385)$ over a wide energy range.

π^+d Interactions from 1.1 to 2.3 GeV/c

Maris A. Abolins, Orin I. Dahl, Gerry Danburg, Donald Davies, and Robert Rader

The motivation for the 1.1- to 2.3-GeV/c experiment was the desire to study the production and decay of the I = 0 mesons η, ω, η', and ϕ as a function of momentum near threshold; thus the major measuring effort has been directed at events that presumably involve π^+ neutron interactions with the proton acting as a "spectator." To this end we have measured 50 000 four-prong events, 1300 five- and six-prong events, and 1500 events with neutrally decaying strange particles. A preliminary report on the production cross section and angular distribution of isoscalar mesons with a mass < 1 GeV was delivered at the Heidelberg Conference on Elementary Particles. A more comprehensive publication is being prepared.

Search for a $2\pi^0$ Resonance Near 730 MeV in π^+d Interactions

Robert J. Manning and Gerald A. Smith

In an analysis of 229 000 pictures of π^+ at incident momenta of 1.1 to 2.3 GeV/c in the deuterium-filled 72-inch bubble chamber, we have identified 8386 examples of the reaction $\pi^+d \rightarrow pp$ + neutrals. An application of the impulse approximation, plus a selection $1.3 \leq p_{lab}(\pi^+) \leq 2.3$ GeV/c, gives 4965 events of the type $\pi^+n \rightarrow p$ + neutrals. At a small momentum transfer (≤ 0.2 and 0.08 GeV/c^2) to the neutrals system, we find no direct evidence for an enhancement near the reported position of the $\epsilon^0 \approx 730$ MeV. A detailed subtraction of $3\pi^0$ and $N^*(1238)$ background based on cross sections from other experiments results in a $2\pi^0$ mass spectrum, which is found to be in agreement with the direct experimental results of Corbett et al. (in shape only) and with the prediction by Malamud and Schlein (in shape and magnitude). The latter is based on an analysis of the ρ decay asymmetry. Consequently, we interpret our results as consistent with the existence of the ϵ^0, the parameters for which result from the analysis by Malamud and Schlein. Our analysis (Gerald A. Smith and Robert J. Manning, Search for a $2\pi^0$ Resonance Near 730 MeV in π^+d Interactions) has been accepted for publication in Physical Review, and will appear within the next few months. A related analysis of the $\pi^+\pi^-$ system has recently been embarked upon, and preliminary results will soon be available.

F. BP66 EXPERIMENT

Jared A. Anderson, Dennis B. Smith, and Gerald A. Smith

A 72 000-picture pp exposure was made in the Brookhaven National Laboratory 80-inch hydrogen bubble chamber in November 1966. Incident beam momenta were 13, 18, 21, 24, and 28.5 GeV/c, and roughly equal amounts of film were exposed at each of the five momenta. First and second scans for all topologies (except two-prongs) are completed, and conflicting data are resolved. A single scan was made for two-prongs and a third of our film was scanned for a beam track count. We have completed first measurements of 25 000 four-prong events. The 4500 nonstrange events with more than six prongs have been measured and processed without attempting any kinematic fits. Some of our six-prongs (2500, one-fifth the total) are currently being measured.

Currently the four-prong events are being fitted. We expect to obtain cross sections and test production models (e.g., multiperipheral models). The center-of-mass distributions of the measured momenta and the number of outgoing charged tracks in the nonstrange events

will be studied as a function of incident beam energy.

In collaboration with the Michigan State group, an analysis of 33 000 two-prong events is being carried out. The inelastic data are currently being analyzed in terms of various exchange models (simple one-pion, modified one-pion, Reggeized exchange, etc.). Results should be forthcoming within the next several months.

G. P67 EXPERIMENT

Maris A. Abolins, Alan Rittenberg, and Gerald A. Smith

Antiproton Interactions in Hydrogen and Deuterium

An experiment involving antiproton interactions in hydrogen and deuterium from 1.5 to 2.0 GeV/c is currently under way. This is a collaboration with the Michigan State group involving the Brookhaven National Laboratory 31-inch hydrogen bubble chamber and the Argonne National Laboratory 30-inch deuterium bubble chamber. Approximately 20 000 measurements of interactions in hydrogen have been completed at Michigan State University, and an analysis of elastic scattering and isobar production is currently being prepared for the Vienna conference. At LRL approximately 70 000 interactions in deuterium have been measured, and partial results related to the hydrogen analysis will be included in the Vienna report. The purpose of the analysis is to study resonance production in the direct channel as reported by previous experiments measuring total cross sections in hydrogen and deuterium.

H. D66 EXPERIMENT

Philippe Eberhard, Gerald R. Lynch, and Morris Pripstein

An exposure of approximately 210 000 pictures was taken in the 72-inch deuterium-filled bubble chamber with an incident deuteron beam at 4.4 GeV/c, for purposes of studying deuteron-deuteron interactions. Results from this experiment will increase the world data on dd interactions by more than a factor of 10.

The scanning and measuring of all the film has essentially been completed. The events were measured on the spiral reader and the measurement data were then processed on the CDC 6600 by use of the new set of Alvarez group programs (TVGP, SQUAW, ARROW). We are in the midst of an intensive analysis of the results of these measurements. The analysis is complicated by the presence of biases which are inherent in a study of dd interactions in a bubble chamber. We have made substantial progress in analyzing these unique biases and isolating their effects, and we will soon be reporting results on various dd interactions.

I. P65 EXPERIMENT

An exposure of the 72-inch hydrogen bubble chamber to protons at 5.5 and 6.6 GeV/c was made in 1965.

Nonstrange Interactions in p-p Collisions at 6.6 GeV/c

Eugene Gellert and Gerald A. Smith

At a momentum of 6.6 GeV/c, we have measured 32 000 two-prong and 61 000 four-prong events. Although this is only a fraction of the events on our film, no more measurements are

planned at this time.

The fitting of the four-prong events is essentially complete. We have fitted about 9000 examples of $pp \rightarrow \pi^+\pi^-$ with less than a 5% contamination, and 8100 of $pp \rightarrow pp\,\pi^+\pi^-\pi^0$ and 10 000 of $pp \rightarrow pn\,\pi^+\pi^+\pi^-$ with a contamination of about 10% each, after ionization. The other reactions have been difficult to fit uniquely. A second scan and resolution of conflicts has also been completed, so that more accurate cross sections should be available soon. We have a scanning efficiency of about 97% on the first scan and 98% on the second scan.

We have continued our study of the events $pp \rightarrow p\pi^-\Delta^{++}(1238)$, $\Delta^{++} \rightarrow p\pi^+$(four prongs). In collaboration with E. L. Berger of Dartmouth College and University of California—Los Angeles, we have published an analysis of these data in terms of a model based on the exchange of Regge poles, rather than simple pion exchange [Phys. Rev. Letters 20, 964 (1968)]. In addition, a related analysis in terms of a modified one-pion exchange model has been submitted to Phys. Rev. Letters. An analysis of the two-prong events, as well as a corollary analysis of pd interactions at the same momentum, is currently under way.

Strange-Particle Interactions in pp Collisions at 5.5 and 6.6 GeV/c

A. Barry Wicklund and Gerald A. Smith

In collaboration with University of California, Los Angeles, we have analyzed approximately 15 000 strange-particle production events in pp collisions at 5.5 and 6.6 GeV/c. A comprehensive article for Physical Review is currently in preparation. Although the one-pion exchange model gives a good description of the data, asymmetries in the Treiman-Yang distributions and other anomalies are being investigated in terms of one-kaon exchange, absorption, and final-state interactions.

J. LRL-SLAC EXPERIMENT ON π^-p INELASTIC REACTIONS

Leroy R. Price, Arthur H. Rosenfeld, Paul Söding,
David Herndon, and Ronald Longacre
(with David Leith, Anthony Brody, and Ben Shen, SLAC)

A systematic study of πN inelastic interactions from threshold up to 2 GeV/c is being carried out.

We have so far measured about 175 000 π^-p events, partly on old 72-inch film (some as old as 1960), and partly on film which we took in three exposures (yielding approximately half a million pictures) of the MURA 30-inch hydrogen bubble chamber at Argonne. With this, we cover the region 1580 MeV $\leq E_{c.m.} \leq$ 2000 MeV. Presently, we are running with the 25-inch hydrogen bubble chamber at the Bevatron to obtain film covering the region 1340 MeV $\leq E_{c.m.} \leq$ 1570 MeV. We are authorized to take 300 000 pictures, which will give us about 100 000 two-prong events. Preliminary results of the analysis of the inelastic events were presented by A. D. Brody (SLAC) at the Boulder 1967 Summer School, and by A. H. Rosenfeld at the Irvine Conference on Pion-Nucleon Scattering (December 1967).

K. K82 EXPERIMENT

Stanley M. Flatté, Jerome H. Friedman, Angela Barbaro-Galtieri, Margaret Altson-Garnjost, Gerald R. Lynch, Monroe S. Rabin, Frank T. Solmitz, Philip Davis, and Victor Waluch

About 150 000 pictures of 12-GeV/c K^+ incident on hydrogen in the 82-inch bubble chamber have been taken in March and April of 1968. Scanning has been completed on more than half the film, and measuring on the spiral reader will commence shortly. It is expected that 450 000 more pictures will be taken in FY 1968.

L. A BACKSCATTERED LASER BEAM AT SLAC

William Podolsky, Arthur H. Rosenfeld, Paul Söding, Robert D. Tripp, and Monroe S. Rabin
(with Joseph J. Murray, Paul Klein, SLAC, and Charles Sinclair, Tufts University)

A monochromatic photon beam directed into the SLAC 82-inch bubble chamber is currently being set up at SLAC, and should be operational by early fall of 1968. The beam is generated by backscattering light from a ruby LASER off the SLAC primary electron beam, and will be monochromatic to about 1% at 3 GeV. It will also be possible to obtain photons with linear or circular polarization in excess of 90%. It is planned to use this beam in FY 1969 in collaboration with SLAC and University of California, Berkeley to study vector meson photoproduction at 3 GeV. Events with three or more charged outgoing particles will be measured. Furthermore, improvements that may be made in the beam towards the middle or end of FY 1969 will make it possible to investigate the electromagnetic properties of baryonic resonances formed in the s channel in πp interaction by studying the process $\gamma p \rightarrow \pi^+\pi^- p$ in the energy region 0.5 to 2.0 GeV.

II. ACCELERATOR EXPERIMENTS USING SPARK CHAMBERS

A. PROGRAM IN COLLABORATION WITH MOYER-HELMHOLZ GROUP

Orin I. Dahl, Morris Pripstein, and Michael Wahlig

A series of spark chamber experiments at the Bevatron has been undertaken to study various neutral final states in $\pi^- p$ interactions.

Neutral Decay Modes of the Eta Meson

We plan to measure the branching ratios of the various neutral decay modes of the η meson in a study of the reaction $\pi^- p \rightarrow n\eta$, just above threshold, where the cross section for this reaction is maximum. The reaction will be identified by detecting all the final-state particles. The detection equipment will consist of a set of very large spark chambers to detect γ rays and a set of neutron counters to measure the neutron time of flight from the liquid hydrogen target. The 20 neutron counters will be mounted in a ring at a polar laboratory-system angle of about 20 deg. The spark chambers are between 7 and 8 radiation lengths thick, and form five of the six faces of a cube with the target at the center so that the solid angle for detection of γ rays from the decay of the η meson is large.

The spark chamber pictures will be scanned and measured by the SASS device developed

at Lawrence Radiation Laboratory.

We are now in the final stages of tuning the apparatus at the Bevatron, and we hope to start taking data before July 1968.

Neutral Diboson Experiment

With the same personnel and much of the same equipment as in the preceding experiment, we are also preparing for an experiment at the Bevatron to study the reaction $\pi^- p \rightarrow n\pi^0\pi^0$ between 1.5 and 2.5 GeV/c. A completely different beam from the one used in the eta experiment has been designed. The principal purpose of the experiment is to analyze the $\pi^0\pi^0$ system in a search for scalar mesons and to measure the $\pi^-\pi$ phase shifts.

We now expect to run this experiment at the Bevatron immediately after the eta experiment is finished. We expect to collect about 8000 events of the desired type to study the peripheral production of the diboson $\pi^0\pi^0$ system.

B. DEUTERON MISSING-MASS EXPERIMENT

Maris A. Abolins, Gerald S. Smith, Lawrence H. Smith, and A. Barry Wicklund

An experiment to measure the momentum spectrum of deuterons produced in pp interactions at 4 to 7 GeV/c is presently under way. The intent of this experiment is to measure the missing-mass spectrum associated with deuterons and relate this spectrum to possible resonance production. Apparatus consisting of wire spark chambers and magnetostrictive readout, a PDP-5 computer and its interface, Cerenkov counters, scintillators, and fast logic has been thoroughly tested and found to perform satisfactorily. At present, initial beam tuning is being performed, and final production running is expected to commence on approximately July 1, 1968. The experiment is scheduled for 10 Bevatron tune periods and 10 production periods. With satisfactory Bevatron performance and scheduling, the bulk of the production running should be completed by September 15, 1968. It is expected that preliminary results of this experiment will be presented at the High Energy Conference in Vienna, August to September 1968. An article describing the spark chamber apparatus has been submitted to Review of Scientific Instruments.

III. EXPERIMENTATION USING COSMIC RAYS

A. HIGH ALTITUDE PARTICLE PHYSICS AND COSMIC RAY EXPERIMENTAL FACILITY

Luis W. Alvarez, Philip M. Dauber, Lester J. Lloyd, Lawrence H. Smith, and Michael A. Wahlig

This program, led by L. W. Alvarez, is funded by NASA, through a contract with the Space Sciences Laboratory of the University of California. The above-named Lawrence Radiation Laboratory and Space Sciences Laboratory staff members are contributing to the project, together with a group of physicists at the NASA Manned Spacecraft Center at Houston. Because this program is currently benefiting from the availability of LRL facilities and working space, the following account is presented here.

The present objective of the program is to develop a balloon-borne momentum-analysis

system to measure the spectra of cosmic ray particles; the high energy protons ($\gtrsim$ 100 GeV) will subsequently be used in the study of high energy interactions. Presently work is continuing on the development of both the momentum-analysis system and the flight capability of the balloon-borne gondola.

The momentum analysis system employs spark chambers and emulsions to determine the incident and exit trajectories of particles passing through the field of a superconducting magnet. This magnet, which is one of the world's largest--with an integrated field strength of 12 kilogauss-meters and a 1-meter diameter open-center bore--has been designed and built at LRL's Livermore site. Several successful tests of the magnet have now been conducted. Two multi-wide-gap spark chambers, designed for optimum resolution, have been built and are now being tested. The emulsion stack, which is unique in its large size and thermal and mechanical stability, is nearly complete. The 35-in.-diameter emulsion plates are being provided by Pittsburgh Plate Glass and Eastman Kodak. Calibration techniques, involving both premeasurement and computer analysis of the measured particle trajectories, are under development, and promise momentum resolution well above 10^4 GeV. Computer programs for calibration of compact high-resolution spark chamber optical systems and track finding in associated emulsion plates have been written and successfully tested. Track-finding runs to test the new wide-gap chambers and to aid in the development of sophisticated track-finding methods are under way. The massive granite-stage scanning and measuring engine is in the advanced stages of construction. This device will be used to measure the emulsion plates and, under computer control, to locate and accurately measure the tracks. An accuracy of better than 1μ over 0.5 meter will be attained by means of laser interferometry. The optical system, interferometer, readout electronics, and servo controls are now being debugged and tested. A shower counter for distinguishing electrons from protons is being designed at Manned Spacecraft Center, Houston; a prototype was tested recently at SLAC.

An extensive development and testing program to improve the reliability of balloon operations and gondola recovery has been undertaken as a result of the loss of the HAPPE 1 gondola. Because of funding difficulties this program has now been deemphasized, and the planned flight of the full momentum-analysis system, including the large superconducting magnet, has been indefinitely postponed. The present emphasis is on (a) development of the magnet–spark chamber–emulsion technique for measuring very high momenta with application to ground-based measurements of cosmic ray muon spectra, and (b) inexpensive flights involving a small superconducting magnet to measure cosmic-ray electron and high-Z spectra. Both these experimental programs promise to yield data within 1 year on questions of great current interest in particle physics and astrophysics. A small superconducting magnet in the shape of a Helmholtz pair has been designed, partially constructed, and successfully tested to $\approx$ 40 kgauss.

B. COSMIC RAY MUON EXPERIMENT

Luis W. Alvarez, Philip M. Dauber, Stanley M. Flatté, Lawrence H. Smith, M. Lynn Stevenson, and Michael A. Wahlig

Keuffel and collaborators at the University of Utah, studying the angular and momentum distributions of very energetic muons, have found evidence that there may be another source of muons than π and K decay, perhaps the long-sought-after intermediate vector meson. The Utah experiment was done in a mine, and their momentum spectra were deduced from range

spectra by using the range-momentum relation. There are great uncertainties in this relation for very large muon momenta (> 1000 GeV/c), and perhaps this uncertainty could be responsible for the unexpected results.

Acting on the suggestion of M. Abolins and G. Smith, a group of us at LRL, in collaboration with Perl, Toner, and Zipf at SLAC, have decided to use magnetic deflection to determine the momentum spectra (> 1000 GeV/c) at various zenith angles. Here at Berkeley we shall use the magnet of the 184-inch cyclotron ($\int Bdl \approx 100$ kG meters) to measure at zenith angle ≈ 85 deg. At SLAC the Perl magnet ($\int Bdl \approx 30$ kG meters) will be used for zenith angles between 50 and 90 deg. The HAPPE magnet (≈ 12 kG meters) will be used to measure between 0 and 30 deg. Preliminary measurements of possible trigger rates have been made on the Perl equipment. The results are favorable for the possibility of doing both the LRL and SLAC experiments.

IV. FLUX AMPLIFIER

Philippe Eberhard and Ronald Ross

A first model of the flux amplifier has been constructed and is working. It is being tested and improved for measurements of extremely low magnetic fields.

V. DATA-REDUCTION OPERATIONS

Edward H. Hoedemaker

Effort

During this semianuual report period we averaged 63.47 full-time equivalents (FTE's) of effort. The sick leave, vacation, and holiday charges added 10.48 FTE's to this for a total of 73.95 FTE's averaged for the period. Compared with the previous six months, our effort is down 14.0%.

Scanning

With the starting of K82, a significant reassignment of effort took place. Experiments such as APE, K63, and π66 were reduced in effort. K63 and π66 are in the process of closing and should be completed during the next report period. Also, since most of the experiments are relatively old, the trend has been toward larger amounts of second scans and special scans.

The following information summarizes the scanning of each experiment:

Scanning Distribution

Experiment Name (#)	Frames of first production scan	Frames of second production scan	Frames of special scan	Scan effort (h)
APE (04)				
π^+ at 1030 MeV/c	72 600	117 000		
π^- at 1030 MeV/c		2 400		
π^- at 1170 MeV/c		1 800		
Conflicts and check scans			43 800	
Other special scans			61 200	
APE totals	72 600	121 200	105 000	2681
π63 (08)				
Vee'd events		7 200		
Ambiguities			45 000	
Conflict scans			22 800	
π63 totals	0	7 200	67 800	200
K63 (12)				
Two-prongs with hyperon decay		11 050		
Events with three or more prongs		11 050		
Ambiguities			148 850	
K63 totals	0	22 100	148 850	1785
P65 (17)				
Ionization scan			24 500	
P65 totals	0	0	24 500	25
π66 (18)				
Vee'd events	12 350	4 550		
One- and two-prongs		1 950		
Cross sections			5 200	
Ambiguities			99 450	
Twice-failing events			13 000	
π66 totals	12 350	6 500	117 650	859
K65 (21)				
All types but two-prongs	126 400	40 000		
All event types		38 400		
Conflict scans			100 800	
K65 totals	126 400	78 400	100 800	4392
PD65 (24)				
Two-, four-, and six-prongs with or without vees	22 400	1 400		
PD65 totals	22 400	1 400	0	1823

Scanning distribution (continued)

Experiment Name (#)	Frames of first production scan	Frames of second production scan	Frames of special scan	Scan effort (h)
π66B (25)				
One- and two-prongs		5850		
Cross-section scan			11700	
Ambiguities			328250	
Twice-failing events			130000	
Conflict scans			19500	
π66B totals	0	5850	489450	1288
BP66 (26)				
Two-prongs	44850			
Conflict scans			13000	
BP66 totals	44850	0	13000	637
P67 (28)				
All event types	76000	42000		
Conflict scans			16000	
$\bar{P}$67 totals	76000	42000	16000	3499
K82 (30)				
All event types	91000	48100		
Check scans			97500	
Conflict scans			13650	
K82 totals	91000	48100	111150	2683
PD (31)				
All event types	52000			
PD totals	52000	0	0	1180
GROUP TOTALS	497600	332750	1194200	21052

Measuring

During this period we continued to deemphasize our use of the Mark II Franckensteins. The ratio of SR measurements to MPII measurements went from 3:1 last period to 7:1 this period. As the figures below indicate, MPIIA was almost completely phased out and is now being used primarily for research and development.

The spiral readers saw individual gains (in measured events of 58.5% and 67.2% for SR I and SR II respectively over last period. Collectively, they showed a 62.2% increase. Improvements over the previous period were for several reasons: (a) SR I was down for one month in the previous period while being moved, (b) SR II did not become fully operational until June of previous period, the resulting loss being about 1.5 months of measuring, and (c) the utilization of both machines was greater than in the past; less time was devoted to maintenance and other nonmeasuring functions.

The table below shows the breakdown of effort and measurements by machine.

	Events	Measuring hours
MP II's:		
II A	1 136	146
II B	34 780	3 187
II C	23 903	2 593
II D	20 291	2 422
All MP II's	80 110	8 348
Spiral readers:		
SR I	323 237	3 258
SR II	256 120	3 218
Both SR's	579 357	6 476
All machines	659 467	14 824

May-November 1968 Forecast

During the next report period our effort should increase notably, as it always does due to the summer hours increases. We should average about 71 FTE's of effort and 78 FTE's of total charges. This will be offset by correspondingly lower figures for the November '68 - April '69 report.

Scanning effort will undoubtedly rise, but exact predictions are impossible, since conditions are extremely variable. Several new experiments are scheduled to begin--some or all of which will require scanning effort. Among these are the $\eta\pi\pi$ spark chamber experiment, a π^+ or π^- run in the 82-inch chamber, and a large photon experiment to be run at SLAC in the 82-inch bubble chamber and scanned partly, if not entirely, here.

Measuring probably will not increase greatly. The spiral readers are already putting out at near-maximum capacity, and the MP II's will continue to be used less. Our total measurements should be about 690 000 events, with a 7:1 ratio between the SR's and MP II's.

VI. PROGRAMMING EFFORT

PERSONNEL

Barrie Pardoe
(Supervisor of the Alvarez Programming Group)

G. T. Armstrong
J. N. Baldridge
J. H. Burkhard
R. E. Carlson
R. W. Casey
B. J. Cottrell
O. I. Dahl
C. T. Draper
N. L. Gould
M. S. Hutchinson
D. L. Iverson
W. O. Koellner
M. Leavitt
J. T. Merrill
M. I. Nelsen
S. W. Reynolds
E. A. Romascan
N. K. Ruiz
T. R. Tonisson
J. J. Wilson

From November 1967 through April 1968, the Alvarez Programming Group has been responsible for the continued maintenance and development of existing programs. Most of the effort has been put into the bubble chamber programs, the rest going into spark chamber programs and some specialized programming support.

PROGRAMS

The Alvarez Group programs may be classified as follows:

1. Data-Editing Programs: designed to prepare bubble chamber data from various measuring devices for subsequent processing.

2. Data-Analysis Programs: designed to analyze bubble chamber data to extract the scientific content.

3. Library-Function Programs: designed to keep track of bubble chamber data during experiments.

4. Spiral Reader Programs: to control the spiral readers and to filter their data.

5. Spark Chamber Programs: for use in experiments employing spark chambers.

6. Support Programs: to perform other specialized functions in support of the Alvarez Physics Group.

The work is summarized under each heading.

1. Data-Editing Programs

MATCH is a CDC 6600 program that relates track images in the three stereo views of bubble chamber events to each other so that geometric reconstruction becomes possible. The program has been generalized to handle multivertex events. Documentation of the program has been begun.

The program has been used on 4200 pp events in the Brookhaven chamber at 13 to 28.5 GeV/c. The events were single-vertex, 8- to 14-prong; the failure rate was 7%; the average time per event was 1.3 sec.

MOTIF[1] is a CDC 6600 program to read and check Franckenstein data and to cast them into a standard format prior to analysis. The program has been documented. This program supersedes PANAL.

ORDER is a CDC 6600 program for ordering strings of data output from any of the bubble chamber programs. The program is being adapted to use the random access features of the disk file, with a view to making the program more efficient.

2. Data-Analysis Programs

SIOUX is the combined three-view geometric reconstruction and kinematic fitting program for bubble chamber events. The amount of core space required by the program has been reduced by overlapping storage banks, and the fitting of tracks with large curvature errors has been improved by using momentum rather than curvature as a variable in the fit. A version of the program has been made available for fitting events using the reconstructed data contained in SIOUX output. Documentation of the program is almost complete.

---

1. C. Toland Draper, MOTIF--A 6600 Measurement Editor Program for Events Measured on the Franckensteins, Alvarez Programming Group Note No. P-169, Jan. 1968

The kinematic part of the program (SQUAW) is being adapted to accept spark chamber data for studying the neutral decay modes of the η meson.

ARROW is a CDC 6600 program for selecting data from SIOUX output for histogramming, etc. Efforts are being made to reduce the core requirement and to improve the efficiency of the program.

3. Library-Function Programs

LYRIC III is the CDC 6600 version of the main library program for the Alvarez Group. Several minor changes have been made to the program to improve its efficiency.

The program has been modified to provide information on all kinematic fits attempted for each event.

Revision of the user manual is almost complete.

4. Spiral Reader Programs

OAK is the PDP4 control program for the spiral readers. This program supersedes ACORN and provides for more efficient processing of events.

One version of the program is available for the three-view, single-reel film used with various bubble chambers. Two versions are available for three-view, three-reel film: one each for the Argonne and CERN bubble chambers. Once the memory oscilloscopes are installed on the spiral readers, sufficient core memory of the PDP4 will become available to allow these three versions to be combined into one.

OCTOPUS is a PDP4 program that is to be a master maintenance diagnostic program for the spiral reader. The framework of the program is complete.

The gathering and editing of material to be used in documentation of these spiral reader programs has begun.

POOH is the CDC 6600 program that filters spiral reader output to give the tracks intersecting at a vertex. Besides the changes to the program required by the use of OAK, a lot of effort was put into the following:

The program was generalized to handle different magnifications in the spiral reader optical system and different bubble chambers and experiments.

Track matching has been improved by optimizing the routine for searching the decision lattice for ambiguously matched track images.

A routine has been written to represent tracks by vertex point, end point, and ten average points along the track. This reduces the time required for geometric reconstruction of the tracks in SIOUX.

The tracking routine, which assigns points to a track, is being redesigned to handle crossing and coincident tracks better.

STEEP is the optical calibration program for the spiral reader. The spiral reader system can now be optically corrected for up to 20 parameters. However, increasing the number of parameters from 12 to 20 is accompanied by an as yet unexplained increase in the fitting of χ^2 from SIOUX.

LASER is a CDC 6600 program to calibrate the laser "crutch-point" device. This device is an image plane digitizer which uses a rotating laser beam to generate a bipolar

coordinate system. It is designed to measure the crutch points--arbitrary points on a track required by the filtering program, POOH--at a faster rate.

MONOTON is a CDC 6600 program for the rapid checking of spiral reader output. This program has been rewritten to improve its efficiency.

5. Spark Chamber Programs

The PDP5 control program for monitoring the spark chamber data for the Deuteron Missing Mass Experiment is almost complete. Documentation of the program has begun.

The SASS[2] program has been modified to measure electron showers generated in spark chambers, used for γ-ray detection. Development of CDC 6600 programs to analyze modified-SASS output has begun. These programs will be used in studying the neutral decay modes of the η meson.

For the High Altitude Physics Experiment (HAPPE), the CDC 6600 programs OPTCAL for calibrating the optical system and SPRECON for reconstructing sparks from the film measurement have been completed. The output from SPRECON will be used to localize the emulsion areas which are to be searched for tracks.

A PDP8 program was written for testing an electron detector to be used in this experiment.

COMUT is a CDC 6600 program that has been written to perform on-line calculations, one Fortran line at a time for a single user. The program is being extended to provide this capability for many users.

MAXIME is a CDC 6600 program for maximizing likelihood functions. The program is being designed to find maxima as efficiently as possible by using a combination of grid, maximum-gradient, and neutron methods. Work on this program has continued, but the program is not yet completed.

A set of three programs has been written for use in the analysis of K^-p data. The programs are being used in an attempt to find the best parameterization of the elastic and inelastic interactions over a momentum range 280 to 450 MeV/c. The parameters are the phases, scattering lengths, resonance parameters, and K-matrix elements.

Work has started on a CDC 6600 central memory loader. This loader is intended to reduce core requirements of programs by loading only subroutines required for the execution of that particular program run. The loader will be faster and require less core storage than the loader provided by CDC.

Other Programming Notes Written During this Period

Margaret Alston-Garnjost, Reject Codes in SIOUX, Alvarez Programming Group Note No. P-168, Jan. 1968.

Margaret Alston-Garnjost, Event Types for K82 Experiment No. 30, Alvarez Programming Group Note No. P-170, March 1968.

---

2. Donald H. Zurlinden, Computer-Controlled Data Reduction of Spark Chamber Film, UCRL-17695, Aug. 1967.

VII. DATA ON PARTICLES AND RESONANT STATES

Arthur H. Rosenfeld, Naomi Barash-Schmidt,
Angela Barbaro-Galtieri, Leroy R. Price, Paul Söding, and Charles G. Wohl

The January 1968 edition appeared

1. As an article in Reviews of Modern Physics.
2. As a UCRL Report -- 1500 copies.
3. As a CERN Report -- 1000 copies.

Separate wallet sheets were printed, and distributed separately by both LRL and CERN.

In addition we produced at LRL the first edition of a 3×5-in. 32-page Data Booklet. It contains the wallet sheet data, plus such entries as the phone numbers of Particle Physics Groups in the U. S. and in Europe. The first printing of 2500 lasted only a few weeks; a better estimate of the demand would have been 4000.

Work continues on compiling cross sections, and a first edition containing data on K^+p should be ready this summer.

VIII. PUBLICATIONS AND PAPERS

1. S. U. Chung, O. I. Dahl, J. Kirz, and D. H. Miller, Multipion Final States from π^-p Interactions at 3.2 and 4.2 GeV/c, Phys. Rev. 165, 1491 (1968).
2. J. R. Hubbard, J. P. Berge, and P. M. Dauber, The Decay $\Xi^- \to \Lambda^0 e^- \nu^-$, Phys. Rev. Letters 20, 465 (1968).
3. S. M. Flatté and C. G. Wohl, Reaction $K^-p \to \Lambda\eta$ from 1.2 to 1.7 BeV/c, Phys. Rev. 163, 1441 (1967).
4. P. Eberhard, M. Pripstein, F. T. Shively, U. E. Kruse, and W. P. Swanson, A Determination of the Spin and Parity of the $Y_1^*(1660)$, Phys. Rev. 163, 1446 (1967).
5. A. Barbaro-Galtieri, M. Matison, A. Rittenberg, and F. Shively, Search for a Charged Meson in the Mass Region of 960 MeV, Phys. Rev. Letters 20, 349 (1968).
6. L. K. Gershwin, M. Alston-Garnjost, R. O. Bangerter, A. Barbaro-Galtieri, F. T. Solmitz, and R. D. Tripp, Measurement of the Asymmetry Parameter for Σ^- Leptonic Decay, UCRL-18169, April 1968.
7. T. S. Mast, L. K. Gershwin, M. Alston-Garnjost, R. O. Bangerter, A. Barbaro-Galtieri, J. J. Murray, F. T. Solmitz, and R. D. Tripp, Measurement of the $\Sigma^\pm$ Magnetic Moment, UCRL-18162, April 1968.
8. B. R. Webber, F. T. Solmitz, F. S. Crawford, Jr., and Margaret Alston-Garnjost, Test of the $\Delta S = \Delta Q$ Rule in Leptonic Decays of Neutral K Mesons, UCRL-18135, March 1968.
9. E. L. Berger, E. Gellert, G. A. Smith, E. Colton, and P. E. Schlein, Double-Regge-Pole-Model Analysis of $pp \to \Delta^{++} p\pi^-$ at 6.6 GeV/c, Phys. Rev. Letters 20, 964 (1968).
10. S. M. Flatté, J. J. Murray, P. R. Klein, L. H. Johnston, and S. G. Wojcicki, Phys. Rev. 166, 1482 (1968).
11. G. A. Smith and R. J. Manning, Search for a $2\pi^0$ Resonance near 730 MeV in π^+d Interactions, UCRL-17917, Dec. 1967.
12. E. Colton, P. E. Schlein, E. Gellert, and G. A. Smith, $pp \to \Delta^{++} p\pi^-$; OPE,

Pole Extrapolation and the Deck Effect, UCLA-1023, April 1968.

13. A. H. Rosenfeld and P. H. Söding, N^* Studies Via πp Inelastic Reactions, UCRL-18154, March 1968.
14. L. R. Price and F. S. Crawford, Jr., Three-Pion Decay Modes of the η Meson: Is T = 3 Necessary?, Phys. Rev. 167, 1339 (1968).
15. R. A. Grossman, Eta Production in the Reaction $\pi p \rightarrow \pi p \eta$ at 1170 and 1050 MeV/c, UCRL-18141, March 1968.
16. Daniel M. Siegel, Resonance Production, Particularly $Y_1^*(1385)$ and ρ, in $K^- p \rightarrow \Lambda \pi^+ \pi^0 \pi^-$ and $K^- p \rightarrow \Lambda \pi^+ \pi^-$; P_{K^-} = 2.1 to 2.7 BeV/c (Ph. D. Thesis), UCRL-18041, Dec. 1967.

EXPERIMENTAL PHYSICS

Kenneth M. Crowe and Donald H. Miller in charge

K^+ DECAY ANALYSIS

Kenneth M. Crowe, Roy P. Haddock, Michael E. Zeller, and Ned T. Dairiki

Work has concluded on data analysis of a Bevatron experiment on the leptonic decay modes of the K^+. The basic arrangement consisted of a momentum-analyzing spectrometer in conjunction with wire chambers and spark chambers. Data recorded using an on-line PDP-5 computer included counter, wire chamber, spark chamber, and K^+ lifetime data for each event.

The data were scanned and kinematically reconstructed to yield momentum and range values for each event. The final data reduction yielded some 18 5000 events from which a measurement was obtained of the relative branching ratios for the modes $K^+_{\mu 2}$, $K^+_{\pi 2}$, $K^+_{\mu 3}$, and K^+_{e3}. The results are:

$K_{\mu 2}$ (63.4 ± .99)%

$K_{\pi 2}$ (21.6 ± .72)%

$K_{\mu 3}$ (3.51 ± .50)%

K_{e3} (4.12 ± .36)%

These results show good agreement with previously published measurements.

PION FORM FACTOR

Kenneth M. Crowe, Anthony S. L. Parsons, and Michael A. Fainberg

Analysis of the $\pi^{\pm}He^4$ differential-cross-section data obtained in 1967 is essentially complete. We find a value for the pion charge radius which is larger than predicted by current theory. Corrections due to the nuclear distortion terms in the scattering amplitude are presently being assessed for their error contribution. Some other effects which may give rise to terms linear in the pion charge have also been considered.

MEASUREMENT OF THE DIFFERENTIAL CROSS SECTION FOR $\pi^- p \rightarrow n\gamma$

Roy P. Haddock, Jerome A. Helland, Bernard M. K. Nefkens, Anthony S. L. Parsons, Peter Truoel, Lynn Verhey, and Michael E. Zeller

We propose to measure the $\pi^- p \rightarrow n\gamma$ cross section at about 340-MeV pion incident energy with some additional data at 200 MeV and 270 MeV.

The interest in this process, which to date has only been studied experimentally using photoproduction from deuterium (and thereby suffers from difficulties in interpretation), has been stimulated by a prediction of the differential cross section using dispersion relations and pion-nucleon phase shifts. In particular, the classification of the Roper resonance in the SU3

multiplet scheme strongly influences the cross sections (even at 340 MeV, the maximum energy on which the calculations are felt to be reliable). Several other theoretical studies would also benefit from data on the above reaction, including a test of $\Delta I = 0$ or 1 for electromagnetic processes [which requires the equality of the charged and neutral radiative decay widths of the $N^*(1238)$].

The apparatus will consist of liquid scintillation counters and a thick-plate spark chamber to determine the direction of the neutron and γ ray respectively, while a set of hodoscope counters will measure the incident pion direction. Monte Carlo studies indicate that there is clear separation of the radiative mode from the predominant background, charge exchange, when the proposed apparatus is used. It is proposed to continue this work at higher energies at the Bevatron.

π-π S-WAVE INTERACTION

Kenneth M. Crowe, Tin Maung (UCSD), and Ned Dairiki

An experiment to study the pion-pion interaction in the S-wave, I= 0 state is presently in progress. The presence of such a strong interaction between the final-state pions in the reaction, $\pi^- p \rightarrow \pi^0 \pi^0 n$, should exhibit itself in the energy distribution of the neutron. For energies in the threshold region, the energy available to any final pion-nucleon system occurs much below the established isobar states. Thus a pion-pion interaction might be expected to manifest itself as a dominant feature in the final state of the above reaction.

The basic arrangement consists of an array of shower chambers to detect the γ-rays from π^0 decays at the point of interaction and neutron counters at the end of a flight path of 20 ft for measurement of the neutron time-of-flight spectrum. A time resolution of about 1.5 nsec in the resulting time-of-flight spectra would exhibit an effective-mass resolution of up to 10 MeV in the π-π mass.

Data taking was recently concluded at the 184-inch cyclotron, and a program of film scanning and analysis is presently underway. The experiment is a collaborative effort with the University of California at San Diego.

CHARGE ASYMMETRY IN $K^0_{\mu 3}$ DECAYS

Robert J. Budnitz, Robert L. McCarthy, Donald H. Miller, William N. Ross

A Bevatron experiment has been planned to measure the charge asymmetry in $K_{\mu 3}$ decay: the ratio $(K^0_L \rightarrow \pi^- \mu^+ \nu)/(K^0_L \rightarrow \pi^+ \mu^- \nu)$. The preliminary calculations have been completed and apparatus is just entering the design-construction stage. We hope to begin data taking by midwinter. We expect to improve on the earlier experimental measurements by acquiring substantially more events (10 times) and by a more detailed study of possible systematic errors.

K^0_2 CHARGE ASYMMETRY

Donald H. Miller and Michael A. Paciotti

Results of the experiment to measure the charge asymmetry

$$R \equiv \frac{\Gamma(K^0_2 \rightarrow \pi^- \mu^+ \nu)}{\Gamma(K^0_2 \rightarrow \pi^+ \mu^- \bar{\nu})}$$

in the muonic decay of K_2^0 were published in October 1967.[1] This experiment was performed at SLAC and completed in the summer of 1967. The result was based on about 750 000 counter events; in addition, about 14 000 sample spark-chamber pictures were taken and were used to study possible sources of bias. A program is under way to measure a certain fraction of the spark-chamber events and to reconstruct the decay as completely as possible. It is hoped that a transverse-momentum plot can be obtained for these events and compared with a Monte Carlo calculation for the apparatus. Also this study could yield information about the production of neutral kaons as a function of momentum for our targeting arrangement, which was 3 deg from a 15-GeV/c electron beam onto 1 ft of beryllium.

184-INCH CYCLOTRON REGENERATOR STUDIES

Arthur C. Paul

Improvement of the extraction efficiency of the Berkeley 184-inch cyclotron is of paramount importance if the internal beam is to be increased by a factor of ten, since a limit is placed on the total tolerable internal beam loss by the requirement that the machine remain accessible for periodic maintenance or repair operations. The machine activation probably can not be increased by more than a factor of 2 or 3 above the present level. Consequently, the extraction efficiency must be increased to 70 percent for a tenfold increase in internal beam, if the machine activity is not to be increased by more than a factor of 3 over the present level.

The calculational results for the extraction system of the unmodified present 184-inch cyclotron obtained over the past year are summarized in Fig. 1 and the previous semiannual report.[2] We now understand the origin of the several modes of particle loss and believe we know how to reduce these to a tolerable level. We have found from the calculations that the improvement of the internal-beam quality produced by the installation of a hooded ion source would increase the extraction efficiency without modifications of the magnetic field in the extraction system. Unfortunately the degree of improvement would be insufficient to prevent an increase in machine activity above a tolerable level. Magnetic-field modifications to the regenerator-peeler system therefore appear to be necessary, if the desired increase in extraction efficiency is to be realized.

The efficiency of regeneration is defined as the ratio of the number of particles finishing regenerative action to the number of particles before regeneration begins. The theoretical studies show that 75 percent of the internal beam is successfully regenerated to the beginning of the last turn.

Loss of these particles by vertical blowup must be eliminated for efficient removal of the beam from the cyclotron. At present, 25 to 30 percent of the internal beam which has been successfully regenerated is lost vertically before leaving the face plate of the cyclotron. This vertical loss is brought about by a resonant buildup of the vertical amplitude over the last several resolutions by the peeler at $\nu_z = 1/2$. The vertical focusing force produced by the radial gradient of the magnetic field can change by a factor of more than 40 in the peeler in a distance that is short compared to the wavelength of the vertical oscillation. A change in the radial

1. Phys. Rev. Letters 19, 987 (1967).
2. A. C. Paul, "184-Inch Regenerator Studies," in Physics Division Semiannual Report, May through October 1967, Nov. 1967, p. 70.

gradient of the magnetic field cannot be made if the regenerator itself is not to be modified, since the regenerator and peeler are in "tune" radially. Therefore, we are now studying the decoupling of the vertical focusing from the radial field profile by introduction of a modest amount of azimuthal field variation in the peeler. Vertical forces due to three different mechanisms are so introduced, in addition to that produced by the radial field profile. Estimates indicate that it should be possible to completely eliminate the vertical beam loss, and detailed calculations are now being performed to verify this estimate.

About 30 percent of the internal beam successfully regenerated has so large a spread in radial momentum as to fail to pass through the magnetic channel aperture and therefore is lost to the external beam. Modification of the radial magnetic-field profile over the last turn can reduce this spread in radial momentum, and so eliminate the channel transmission loss. The "prechanneling" can be accomplished by proper flaring of the spiral-ridge peeler at large radii. This is now under study.

Therefore it appears possible to extract up to 75 percent of the internal beam by the introduction of azimuthal field variation to the peeler. This large improvement in extraction efficiency would allow external-beam meson production, alleviating the activity problem of secondary beams inside the main cyclotron cave.

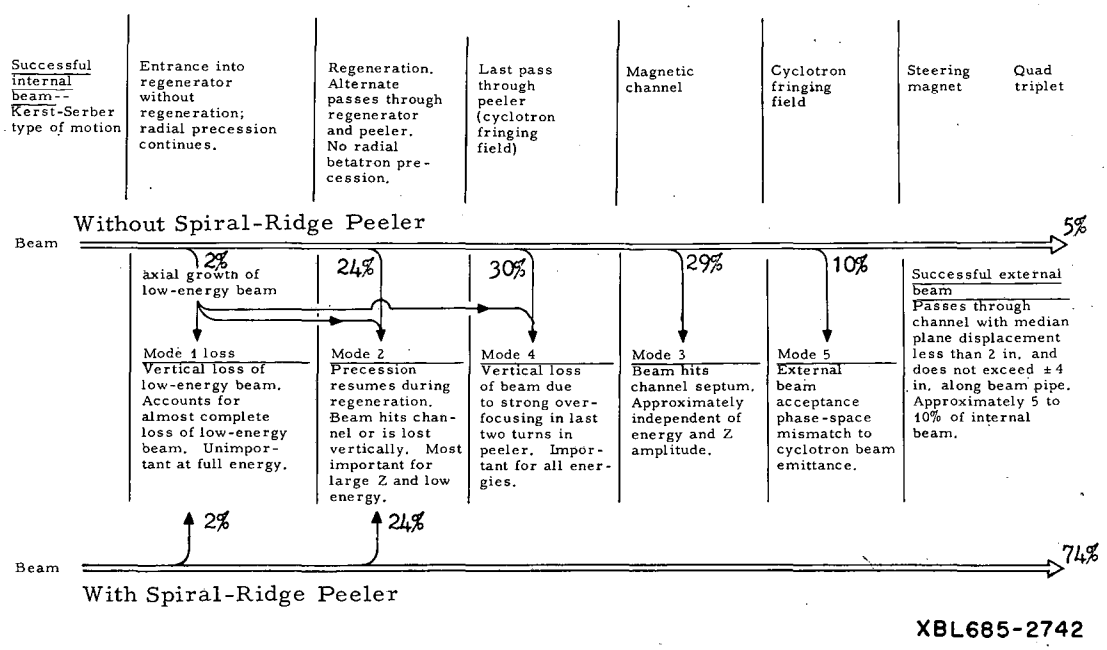

Fig. 1. Calculated loss mechanisms of the 184-inch synchrocyclotron as it operates today and with spiral-ridge peeler modifications.

NUCLEAR EMULSION GROUP

Harry H. Heckman in charge

TEMPORAL CHANGES IN THE INNER-BELT PROTONS

Harry H. Heckman and George H. Nakano*

Observations of high-energy protons geomagnetically trapped in the inner Van Allen belt have been carried out since September 1962 with nuclear research emulsions recovered from low-altitude polar-orbiting satellites. Between November 1962 and June 1966, during the period of minimum solar activity, the omnidirectional proton flux at 63 MeV remained constant to within ±7.6 percent, an error comparable to the statistical accuracy of the measurement. However, since August 1966 we have obtained substantial evidence that the proton flux is decreasing in a manner which is attributable to solar-cycle variations in the density of the upper atmosphere. As of our last measurement in November 1967, the flux has diminished by more than a factor of 2 relative to the stable flux profile observed during the last solar minimum period.

An energy spectrum, $60 < E < 600$ MeV, has been measured for a flight made in June 1967. Contrary to the expected changes in shape of the spectrum that should be affected by solar changes in the atmosphere, we find that the entire spectrum is depressed uniformly to about 0.6 of its value observed during solar minimum. Because the above effect is small, we shall undertake spectral measurements for later flights in order to augment these early observations on spectrum changes. Knowledge of whether or not solar-cycle changes occur in the inner-belt proton spectrum will be of key importance to the understanding of the source-loss processes in the inner belt.

PARTICLE IDENTIFIER

Douglas Greiner,† Richard Albert,† and Harry Heckman

As an alternative approach to the emulsion technique to perform flight experiments on the mass, energy, and flux of trapped radiation, we have developed, in cooperation with the Space Sciences Laboratory, a solid-state counter telescope which functions as a particle identifier. A laboratory prototype of the instrument has been constructed and tested in secondary beams containing protons, deuterons, tritons, ^{3}He, and ^{4}He.

The counter consists of eight solid-state counters: two 300-μ-thick silicon-diffused detectors that are coaxial with six 3-mm-thick lithium-drifted detectors. The detector unit is mounted in a cylindrical (anticoincidence) fluor. The recorded data is a set of eight pulse heights for each event. Given this pulse-height information and knowing the energy-loss distributions in each counter, e.g. the Vavilov distribution, we are able to compute the probability

*Lockheed Missiles and Space Company, Palo Alto
†Space Sciences Laboratory, University of California, Berkeley.

that a given particle of energy E caused the observed event. Monte Carlo calculations have shown that particle identification should be certain to one part in 10^4 over the following range of energy.

Particle	Lower Limit (MeV)	Upper Limit (MeV)
He^4	50	265
He^3	45	235
t	20	105
d	20	90
p	15	65
π	7	29

The energy resolution should be accurate to $\approx$ 1 percent.

Operational checks of the counter and calibration tests to define the thickness and active layer of each counter are in progress. Computer programs for analyzing the pulse-height information in terms of mass and energy of the incident particle are near completion.

STOPPING-POWER DIFFERENCES OF $\pi^{\pm}$ MESONS

Harry H. Heckman

Scanning effort for this experiment has been limited during this report period. We have, however, been able to double the amount of data on the relative rates of ionization of $\pi^{\pm}$ mesons at velocities $\beta \leq 0.107$. It is in this velocity region that our preliminary results indicated $dE/dx(\pi^-) < dE/dx(\pi^+)$. Scanning will conclude shortly; reduction of the data is under way,

HIGH-ENERGY NEUTRON SPECTRUM MEASUREMENTS

Harry H. Heckman and H. Wade Patterson

The excitation function is being determined for the frequency f of knock-on star prongs with ranges $\geq$2 mm (corresponding to 20-MeV protons) produced by incident neutrons via deuteron stripping. To date, measurements have been carried out at E_n = 27.5 MeV (f = 0.007) and 230 MeV (f = 0.53). We plan to perform similar measurements at other intermediate and higher neutron energies. The star-prong frequency vs E_n will be the basis of a practical method for determining incident-neutron spectra.

PUBLICATIONS AND PAPERS

1. G. H. Nakano and H. H. Heckman, Evidence for Solar Cycle Changes in the Inner-Belt Protons, Phys. Rev. Letters 20, 806 (1968).
2. H. H. Heckman and G. H. Nakano, Temporal Changes in the Inner Belt Proton, Trans. Amer. Geophys. Union 49, 270 (1968).
3. H. H. Heckman, D. Greiner, and R. Albert, Electronic Detector for Performing Particle-Asymmetry Experiment on AAP Missions, UCB Space Sciences Report Series 9, Issue 28, April 1968.

EXPERIMENTAL PHYSICS

Edward J. Lofgren in charge

DIBOSON PRODUCTION BY 2- TO 5-GeV/c PIONS

Alan R. Clark, Bruce Cork, Tom Elioff, Leroy T. Kerth,
T. N. Rangaswamy, and W. A. Wenzel

Scanning and measuring of the data film by the automatic system SASS is essentially completed. Reconstruction and analysis of the data with the CDC 6600 is now under way, with approximately 75% of the data analyzed. Completion of data reconstruction is expected in July 1968, and analysis should be finished shortly thereafter.

MEASUREMENT OF THE $(K^+ \rightarrow e^+\nu)/(K^+ \rightarrow \mu^+\nu)$ BRANCHING RATIO

Alan R. Clark, Bruce Cork, Tom Elioff, David Newton,*
Leroy T. Kerth, John F. McReynolds, and W. A. Wenzel

The experiment is scheduled for completion in June 1968. Eight hundred stopping K's per pulse decay and are detected by a set of scintillator hodoscopes in a focused-orbit magnetic spectrometer with a solid angle of 0.4 of 4π. Charged particles are detected by spark chambers at three points along the particle orbit. Electrons are selected by a 300-psi ethane-gas Cerenkov counter, and muons, pions, and electrons are identified by a range requirement at the end of the orbit. Analysis programs for the data are now being written. The momentum of the orbiting particle will be determined to approximately 1 MeV, but the decay momentum will be calculable to only 2 MeV due to Landau spread in energy loss in the stopper. The present spectrometer momentum bite, $\Delta p/p$ for orbiting particles, is 12%, and the range of momentum that can be focused is 30 to 280 MeV/c. This will allow measurement of limits on branching ratios, with respect to $K\mu_2$, of $K^+ \rightarrow e^+\nu\gamma$, $K^+ \rightarrow \mu^+\nu\gamma$, $K^+ \rightarrow \pi\gamma\gamma$, $K^+ \rightarrow \pi\nu\nu$, a more accurate determination of $(K^+ \rightarrow \pi^+\pi^0)/(K^+ \rightarrow \mu\nu)$, and a measurement of the ξ parameter in $K\mu_3$ and Ke_3 decays.

NEUTRAL LEPTONIC CURRENTS

Alan R. Clark, Tom Elioff, Henry J. Frisch, Rolland P. Johnson,
Denis Keefe, Leroy T. Kerth, David Newton,* and W. A. Wenzel

The experiment will look for evidence of neutral leptonic currents in the decays $K_L^0 \rightarrow \mu^+\mu^-$, $K_L^0 \rightarrow e^+e^-$ and $K_L^0 \rightarrow \mu^\pm e^\mp$. Tests are continuing on the integrated-circuit elements for the trigger system, and on the relative efficiencies and lifetimes of spark-chamber wires made of aluminum, beryllium-copper, and stainless steel. The parameters of the analyzing magnets are being investigated with a computer, and a prototype magnet is about to be constructed. The experimental run at the Bevatron has been scheduled to begin early in 1969.

---

*Now at University of Lancaster, England.

NUCLEON-NUCLEON TRIPLE SCATTERING

Charles M. Ankenbrandt,* David Cheng,* Leroy T. Kerth,
K. C. Leung, Burns Macdonald,† and Pamela Surko

The experiment to measure the Wolfenstein parameters D, R, and R' for the pp and np systems is presently being set up at the 184-inch cyclotron. This experiment uses a polarized neutron beam of well-defined energy produced by scattering the cyclotron external proton beam on a deuterium target (or a polarized proton beam with a hydrogen target), at 15 to 30 deg in the laboratory system. This produces polarized beams with kinetic energies in the range of 500 to 660 MeV.

A superconducting solenoid with 40 000 turns has been built to rotate the polarization of the nucleons through ±90 deg. The cryostat is 40 in. long, with a warm bore diameter of 4-1/4 in. The coil may be operated at 60 kgauss with helium consumption of about one liquid liter/h.

The nucleons then impinge on a hydrogen target, and the polarization of the recoil particles is analyzed by further scattering in carbon. The detection of the final scattering is with magnetostrictive wire spark chambers.

This experiment will also be the first test of the on-line connection to the 6600 computer located in Building 50B. This link is not critical to the experiment, but will be very useful to the experiment when it works; conversely, this experiment is ideal for a first trial of this new experimental facility.

TOTAL CROSS SECTIONS AT COSMIC-RAY ENERGIES

Bruce Cork

Measurements are now being made of the total cross section of 100- to 1000-GeV cosmic-ray protons and pions. The experiment, at Echo Lake, Colorado, has 8-in.-gap spark chambers to give the direction of incident and scattered particles, and 1-in. iron-plate spark chambers to detect the reaction products. The total energy is measured with a 60-ton iron-plate scintillator sandwich.

The cross-section measurements of carbon are now being made. This summer the carbon will be replaced with a 1-m-thick liquid-hydrogen target, and measurements will continue.

PUBLICATIONS AND PAPERS

1. C. M. Ankenbrandt, A. R. Clark, Bruce Cork, T. Elioff, L. T. Kerth, and W. A. Wenzel, Nucleon Isobar Production in Proton-Proton Collisions Between 3 and 7 GeV/c, UCRL-17763, January 1968.
2. Gerald L. Schnurmacher, Alan R. Clark, and Leroy T. Kerth, Low-Density Polyurethane Foam Plate Spark Chamber, UCRL-17947, November 1967.
3. D. Keefe and C. M. Noble, Radiation Shielding for High-Energy Muons: The Case of a Cylindrically Symmetrical Shield and No Magnetic Fields, UCRL-18117, March 1968.
4. Bruce Cork et al., Search for Massive Particles in Cosmic Rays, Phys. Rev. 164, 1584 (1967).

*Now at Brookhaven National Laboratory, New York.
†Visitor from Virginia Polytechnic Institute, Blacksburg, Virginia.

EXPERIMENTAL PHYSICS

Burton J. Moyer and A. Carl Helmholz in charge

η^0 DECAY AND $\pi^0\pi^0 n$ EXPERIMENTS

Thomas B. Risser, Robert W. Kenney, Morris Pripstein, Orin Dahl, and Michael A. Wahlig

Both these experiments are collaborations with several members of the Alvarez group. They are designed to study neutral final states comprised of γ rays and neutrons and produced in the reactions $\pi^- p \rightarrow \eta^0 n$ (710 MeV/c) and $\pi^- p \rightarrow \pi^0\pi^0 n$ (1.5 to 2.5 GeV/c) respectively.

In each experiment the γ rays will be detected by a five-sided cube of lead-plate spark chambers used by the Moyer Helmholz group for their $K_2^0 \rightarrow \pi^0\pi^0$ experiment at the Bevatron. The neutrons will be detected by 20 large scintillation counters, and the entire system will be triggered by neutrons with the desired time of flight.

Of the two experiments, the first will be a study of the neutral decay modes of the η^0 meson. The second will study the $\pi^0\pi^0$ system in the $\pi^0\pi^0 n$ final state.

The existing spark chamber array will be used without rearrangement. The η^0 experiment also uses the existing beam elements, and therefore will be the first to be performed. Beam tuning has been completed, and all elements of the apparatus have been checked under running conditions. Expected performance has been achieved in all respects. Final counter tuning and hydrogen target adjustments are under way. It is expected that data taking will begin early in June. The $\pi^0\pi^0 n$ experiment will follow after the η^0 experiment has been completed, a new pion beam constructed, and the neutron counters reoriented.

$K_L^0 \rightarrow 2\pi^0$

A. Carl Helmholz, Robert W. Kenney, Ivan R. Linscott, Burton J. Moyer, William P. Oliver, Sherwood I. Parker, Charles A. Rey, Robert J. Cence,* Brian D. Jones,* Vincent Z. Peterson,* and Victor J. Stenger*

Data collection at the Bevatron for the $K_2^0 \rightarrow 2\pi^0$ experiment was completed in early January 1968. A total of 1.8 million spark-chamber pictures were taken in the following modes: (1) free decay into a neutral final state of two or more gammas (45% of all pictures), (2) free decay into a final state having at least two charged particles (18%), (3) carbon regenerator at one position, neutral final state (5%), (4) beryllium regenerator at three positions, neutral final state (19%), (5) beryllium regenerator at three positions, charged final state(5%), (6) beryllium regenerator separated into five slabs spaced uniformly through decay volume, neutral final state (8%), (7) target-empty runs, (8) random pulsing runs.

The free decay, neutral film should have about 45 000 K decays, of which 30 000 will be without anticounter triggers. Slightly more than 2000 (7.5%) of these will show four showers and thus be possible $K_2^0 \rightarrow 2\pi^0$ events. We expect, from a preliminary study of part of the data, that from 100 to 200 will actually be such events, and that half of them will pass all of our

*University of Hawaii

current kinematical cuts. In the final analysis we will use a maximum-likelihood method that will utilize all the available information, including that provided by events not passing all the cuts.

The remaining 28 000 events show mostly six (59%) or five (29%) showers, with only 3% showing 7 showers and 1.5% showing 3 showers. Since most of these events are from $K_2^0 \rightarrow 3\pi^0 \rightarrow 6\gamma$, this is a direct indication that the chamber efficiency is high and that, despite the low value of the branching ratio, the final data should be relatively free from background caused by $K_2^0 \rightarrow 3\pi^0 \rightarrow 6\gamma \rightarrow 4$ detected showers. A preliminary calculation based on a partial scan and measurement of the data of part (1) shows about two $K_2^0 \rightarrow 2\pi^0$ events for each background event in the final sample after all kinematical cuts, but before any analysis using spark counts. From the known $K_2^0 \rightarrow 3\pi^0$ branching ratio and Monte Carlo calculations of the relative $2\pi^0$ and $3\pi^0$ trigger efficiencies, the value of

$$\eta_{00} = \frac{|\text{amplitude for } K_2^0 \rightarrow 2\pi^0|}{|\text{amplitude for } K_1^0 \rightarrow 2\pi^0|}$$

is calculated as $(3.2 \pm 0.6) \times 10^{-3}$, and has been reported in an invited paper by S. Parker at the meeting of the American Physical Society on January 29, 1968.[1] Although preliminary results from the regenerator data agree with these Monte Carlo calculations, it should be strongly emphasized that this number is based on an analysis of less than half the free decay data and incorporates almost none of the potential information on calibrations and systematic errors from the other modes of running.

The final analysis, which we hope to complete by the end of this summer, will use, in addition to the information already provided by the $K_2^0 \rightarrow 3\pi^0$ events of part (1), chamber-calibration information provided by the regenerator events of parts (3) and (4) and the $K_2^0 \rightarrow \pi^+\pi^-\pi^0$ events of part (2). It will also use K_2^0 flux information provided by all the charged decay modes of part (2) and the regenerator events of parts (3) and (4). The latter will require knowledge of the regeneration amplitude, either from published values for the same material at nearby energies or, possibly, from a value determined from the charged final-state regenerator data of part (5).

The separated regenerator film of part (6) provides data in which almost all regenerated K_1^0's are from incoherent processes. Such K_1^0's are made with a broader angular distribution and pass the kinematical filters with a lower efficiency. Since half to two-thirds of the K events of parts (3) and (4) are also from incoherent regeneration, it is important to determine this efficiency directly. Finally, it is possible that a combination of the data from parts (1), free decay; (4), solid regenerator; and (6), separated regenerator, may provide some information on the phase of η_{00}. However, at present this does not appear to be too promising, since the absolute value of η_{00} seems to be less than that originally reported by Cronin.[2]

1. Sherwood Parker, Early Berkeley Results on $K_L^0 \rightarrow 2\pi^0$ Decay Rate (invited paper), Bull. Am. Phys. Soc. 31, 13 (1968).
2. J. W. Cronin, P. F. Kunz, W. S. Risk, and P. C. Wheeler, Phys. Rev. Letters 18, 25 (1967).

K_{e4} EXPERIMENT

Brownlee Gauld, Victor Perez-Mendez, Robert Cence,* Brian D. Jones,* Richard Morgado,* Michael Peters,* and Vincent Z. Peterson*

This experiment is now scheduled to run at the Bevatron beginning in July 1968. The K momentum will be 1500 ± 50 MeV/c. An M5 magnet will be used as an analyzer of the decay particles; the K's will enter from the side, perpendicular to the magnetic field, and each of the three charged decay particles will be detected by separate sets of counters and planar wire spark chambers.

The e^+ counters are at such a wide angle as to eliminate the possibility of detecting pions from τ decay. The π^- counter includes a gas Cerenkov counter in anticoincidence to preclude detection of e^- particles from $K_{\pi 2}$ decay with Dalitz decay of the π^-. The π^+ counters also include a gas Cerenkov counter in anticoincidence. Along with a wide-angle e^- counter this will enable us to search for the $\Delta S = -\Delta Q$ mode of decay simultaneously with the $\Delta S = \Delta Q$ mode. The π^+ Cerenkov counter again eliminates $K_{\pi 2}$ decays.

The spark chambers and Cerenkov counters are nearing completion in the Mechanical Shops.

COMPARISON OF THE LIFETIMES OF POSITIVE AND NEGATIVE PIONS

David S. Ayres, David O. Caldwell,† Allan M. Cormack, Virgil B. Elings,† Arthur J. Greenberg, William P. Hesse,† Robert W. Kenney, and Rollin J. Morrison†

Running at the 184-in. cyclotron was completed in early May, and analysis of the lifetime ratio data is essentially complete. The ratio of the π^+ to π^- lifetimes is found to be $\tau_+/\tau_- = 1.00064 \pm 0.00069$, where the error is almost entirely statistical, and χ^2 per degree of freedom for the fit is about 1.1. This result shows no evidence of a CPT violation in the charged-pion lecay. Before the final data taking began we eliminated a number of important systematic errors, including some present in the first experiment. We should obtain a precise measurement of the π^- absolute lifetime from our data, although analysis of the beam-momentum measurements is not yet complete. Final results for the absolute lifetime should be available within two months. While the uncertainty on the π^+-π^- lifetime ratio cannot be made much smaller using present techniques, we feel that our basic method should be suitable for comparing the K^+ and K^- lifetimes. This measurement is a test of CPT invariance in the strangeness-changing kaon-decay interaction. Our proposal to perform the experiment at the Bevatron has been accepted, but the experiment has not yet been scheduled.

A SEARCH FOR EXCITED LEVELS OF ^{15}N PRODUCED BY μ^- CAPTURE IN ^{16}O

Selig N. Kaplan, Robert V. Pyle, and Lewis E. Temple

A 184-inch-cyclotron run commenced in mid-April and is now in progress. The beam intensity and background have shown the anticipated improvement over the short run of Summer 1967, but no results are as yet reportable.

---

*University of Hawaii.
†University of California—Santa Barbara.

p-He SCATTERING EXPERIMENT

Albert W. Stetz

We have completed an experiment at the 184-inch cyclotron to study the effectiveness of helium for polarization analysis for 70- and 80-MeV protons. Using the low-energy proton beam described in a previous report, we have photographed 630 000 prospective p-He events. The film has been scanned and measured using the TRAMP digitized protractor. About 6000 actual scattering events were recorded at each energy. The data are currently being analyzed by computer programs written to calculate the polarization and differential cross section as a function of angle from TRAMP output. The asymmetry in the reaction $p + He^4 \rightarrow d + He^3$ will also be obtained.

A description and evaluation of the streamer-chamber and image-intensifier system used in this experiment is being published.[1]

MEASUREMENT OF $np \rightarrow \gamma d$ ANGULAR DISTRIBUTION AS A DIRECT TEST OF TIME REVERSAL IN THE ELECTROMAGNETIC INTERACTION

David Cheng, Victor Perez-Mendez, Johnie M. Sperinde (LRL);
Jerome A. Helland, Bryce L. Schrock, Roy P. Haddock, J. Detouef (CULA);
Michael J. Longo, S. Wilson, and K. K. Young (Michigan)

This experiment was run at the 184-inch cyclotron September through December 1967. The deuteron momenta were recorded by magnetostrictive-readout wire chambers, the γ were recorded in lead-plate spark chambers photographically, and all the film has been analyzed by the Vidicon film scanner.

A total number of 1.25×10^6 events were recorded of which about 5% were $np \rightarrow \gamma d$. Seven neutron-energy bins between 300 and 700 MeV were selected, and at each neutron energy data were recorded at angles from 30 to 150 deg c.m.

As a by-product, the angular distribution of $np \rightarrow \pi^0 d$ will also be measured as another test of I-spin conservation.

The data are in the final states of kinematic analysis and an abstract has been submitted to the High Energy Conference (Vienna) September 1968.

PHOTOPRODUCTION OF VECTOR MESONS (SLAC)

Leon Kaufman, Victor Perez-Mendez, Albert W. Stetz, Stephen H. Williams (LRL);
A. Boyarski, F. Bulos, R. Diebold, R. Larsen, D. Leith, B. Richter, and W. Busza (SLAC)

Data runs on the photoproduction of ρ^0 mesons from 5 to 12 GeV using the monochromatic annihilation beam on targets of H, D, Be, Cu, and Pb were finished in February 1968, and the data are presently being analyzed.

Perparation for runs using the bremsstrahlung beam from 12 to 18 GeV are under way. Gas Gerenkov counters are being built to detect K mesons as a tool for identifying ϕ Mesons by the decay $\phi \rightarrow K^+ + K^-$.

An abstract has been submitted on this experiment to be presented at the IEEE Nuclear Science Symposium at Montreal, October 1968.

---

1. A. W. Stetz and V. Perez-Mendez, Development of a Helium-Filled Streamer Chamber System, UCRL-16891, April 24, 1968.

π^--^{4}He INTERACTIONS

Leon Kaufman, Victor Perez-Mendez, and Johnie Sperinde

This experiment has been completed. A preliminary report has been published in Physics Letters,[1] and a final report has been submitted to the Physical Review.[2]

π^--^{3}He INTERACTIONS

Johnie Sperinde, Benjamin M. Smith, Leon Kaufman, and Victor Perez-Mendez

Preparations for an experiment (scheduled on the 184-inch cyclotron for September 1968) to study the interaction of π^- with ^{3}He are under way. The objectives of this experiment are to study in further detail and under different conditions the binding effects among three neutrons seen in the previous experiment. In addition, total and differential cross sections for elastic and inelastic scattering of the π^- will be measured to look for excited states of ^{3}He and to determine the extent to which the π^- interacts with the ^{3}He as a single entity with characteristic values of I and J.

WIRE SPARK CHAMBERS AND ELECTRONIC READOUTS

Ronald L. Grove, Gerald L. Stoker, and Victor Perez-Mendez

Work was concerned mainly with developing the readout for use in magnetic fields and the piezoelectric detectors which are needed for this purpose. Several reports have been written.[3,4]

SPARK CHAMBERS FOR MEDICAL PROGRAM

Leon Kaufman, Victor Perez-Mendez, Johnie Sperinde, Alessandro Rindi,* and Harold Wollenberg*

We have started to develop the use of wire spark chambers with magnetostrictive readouts for the purpose of mapping the distribution of γ-emitting isotopes in human and animal tissue as used by medical groups for diagnostic purposes. Since preliminary considerations showed that spark chambers have potential advantages in accuracy of location and in their size capability (large solid angle) compared with the scintillation camera developed by H. Anger, we have started this program in cooperation with the Nuclear Medicine group of U. C. – San Francisco and the corresponding group of the Donner Laboratory.

In addition to measurements on collimator efficiencies and resolutions, we have done some work on methods by which wire spark chambers can be made self-triggering, utilizing the

*Health Physics Group.

1. L. Kaufman, B. Gauld, J. Sperinde, S. Williams, and V. Perez-Mendez, π^--Helium Interactions at 140 MeV, Phys. Letters 25B, 536 (1967).
2. L. Kaufman, V. Perez-Mendez, and J. Sperinde, π^-He^4 Inelastic and Capture Reactions Leading to Excited and Multineutron Final States, UCRL-18165, April 1968.
3. T. F. Droege, V. Perez-Mendez, G. Stoker, Non-Magnetic Digitized Readouts for Spark Chambers, Princeton-Penn Report PPAD 638E, February 1968 (presented at Scintillation Counter Symposium, Washington, D. C.).
4. R. Grove, L. Kaufman, V. Perez-Mendez, Sparkostrictive Spark Chambers with Piezoelectric Readout, UCRL-18003, April 1968 (presented at Washington APS Meeting).

proportional counter effect on the wires to trigger the ensuing track-locating spark. This initial work will be described in papers to be presented at the Society for Nuclear Medicine (St. Louis, June 1968) and the Second Canadian Medical and Biological Conference (Toronto, September 1968).

PUBLICATIONS AND PAPERS

1. T. F. Droege, V. Perez-Mendez, G. Stoker, Non-Magnetic Digitized Readouts for Spark Chambers, Princeton-Penn Report PPAD 638E, February 1968 (presented at Scintillation Counter Symposium, Washington, D. C.).
2. R. Grove, L. Kaufman, V. Perez-Mendez, Sparkostrictive Spark Chambers with Piezoelectric Readout, UCRL-18003, April 1968 (presented at Washington APS meeting).
3. L. Kaufman, B. Gauld, J. Sperinde, S. Williams, and V. Perez-Mendez, π^--Helium Interactions at 140 MeV, Phys. Letters 25B, 536 (1967).
4. L. Kaufman, V. Perez-Mendez, and J. Sperinde, π^{-4}He Inelastic and Capture Reactions Leading to Excited and Multineutron Final States, UCRL-18165, April 1968.
5. Sherwood Parker, Early Berkeley Results on $K_L^0 \rightarrow 2\pi^0$ Decay Rate (invited paper), Bull. Am. Phys. Soc. 31, 13 (1968).
6. A. W. Stetz and V. Perez-Mendez, Development of a Helium-Filled Streamer Chamber System, UCRL-16891, April 24, 1968.

EXPERIMENTAL PHYSICS

Wilson M. Powell and Robert W. Birge in charge

25-INCH HYDROGEN BUBBLE CHAMBER

Wilson M. Powell and Glenn J. Eckman

The bubble chamber was moved into position for the Powell-Birge, Alvarez, Leith, and Trilling-Goldhaber experiments. Since the chamber location is outside the EPB hall, a caisson-supported pad was constructed to support the magnet. In a month and a half, the pad subsided 0.25 in., and the magnet was shimmed back up to the proper elevation.

During the month of December, a number of personnel of the 25-inch chamber assisted in the successful engineering test run of the 82-inch hydrogen bubble chamber at SLAC.

A platinum target (for John Kadyk's experiment) was constructed, tested, and installed in the chamber. This target can be moved down out of view during other experiments.

The camera was modified by the Special Projects Group to present BCD information and fiducials on each view of the chamber.

Cool-down of the chamber was started on February 29, 1968. The chamber was full on March 3. The various physics groups started their tune-up at this time, using the chamber as an aid.

Six test rolls of film were taken by April 1 for John Kadyk with the target in position. The Powell-Birge experiment started on April 2.

On April 9, the chamber had to be dumped because impure gas plugged the hydrogen refrigerator. This hydrogen gas was found to have 2 800 ppm of nitrogen instead of 50 ppm or less as specified to the supplier. The chamber was again full and operating on April 18.

By April 30, 93 rolls (153 000 pictures) had been taken.

25-INCH HYDROGEN BUBBLE CHAMBER RUN

Powell-Birge Group

During this period the major effort of the whole group has been directed toward the final setup and tuning of the new $1 \rightarrow 2$ GeV/c beam for use in the 25-inch bubble chamber. After several weeks of intensive effort, the tuning was accomplished, and production running of π^+p film was begun for our group. To date we have taken about 150 000 pictures. Additional pictures using incident K^- were taken for the Trilling-Goldhaber group, and some test runs were made by the Alvarez group.

$K^-p \rightarrow \Lambda^0\pi^0$

Robert P. Ely and James Louie

A model consisting of direct-channel resonant amplitudes and t- and u-channel exchange terms has been compared with experimental angular distributions, Λ^0 polarizations, and $\Lambda^0\pi^0$ total cross sections near 1 GeV/c. With D_5, F_5, and F_7 partial-wave resonant amplitudes

[$Y_1^*(1770)$, $Y_1^*(1910)$, $Y_1^*(2030)$] and the exchange terms, a fit with a confidence level of 0.3% is achieved for 12 parameters. The addition of a D_3 resonant amplitude [$Y_1^*(1660)$] and two more parameters improves the fit by an order of magnitude, to 5%. The inclusion of a Σ s-channel exchange term is unnecessary, and the data are also insensitive to a suggested[1] $J^P = 1/2^+$ resonance at 1880 MeV.

K^-d AND K^-n ELASTIC SCATTERING

George E. Kalmus and Nathan Jew

We are currently analyzing the K^-d elastic scattering data from pictures taken in the LRL 25-inch bubble chamber. Using the formalism of Franco and Glauber,[2] we are fitting the data in an effort to obtain the differential cross sections for K^-n elastic scattering.

π^+p INTERACTIONS FROM 2.9 TO 4.1 GeV/c

David G. Brown, Robert W. Birge, George Gidal, and Giovanni Borreani

We are continuing our analysis of π^+p two-prong and four-prong interactions between 3 and 4 GeV/c incident π^+ momentum (in collaboration with University of California—Riverside).

Production of such quasi-two-body final states as $N^{*++}\rho^0$ and $N^{*++}\omega^0$ is of particular interest in the four-prong events.[3] The $N^*\rho$ differential cross section and joint density matrix elements seem to be described fairly well by the one-meson-exchange-with-absorption (OMEA) model; however, the steepness of the forward peak [≈ 7.3 (GeV/c)$^{-2}$] necessitates the addition of a form factor. The corresponding ρ-meson exchange model for the $N^{*++}\omega^0$ state is much less satisfactory. Neither the slope of $d\sigma/dt$ [≈ 2.3 (GeV/c)$^{-2}$] nor the decay density matrix elements resemble the theoretical predictions of the OMEA. Also, the absence of a dip in $d\sigma/dt$ near $t = -0.6$ (GeV/c)^2 is taken as evidence against the exchange of only the ρ-meson Regge trajectory. The other candidate is the B trajectory, and in this context we have demonstrated the existence of B-meson production in π^+p interactions.[4] Further work is being done to separate the ρ and non-ρ exchange contributions in $N^*\omega$ production.

Some work has also been done on resonance formation and production. Evidence for the formation of the I = 1/2, $N^*(2850)$ was found in the $\pi^+p\,\pi^+\pi^-$ events. A peak height of 0.65 mb was estimated for the cross section for this reaction. Decays of higher-mass N^*'s into $N^*(1236)+\pi$ have been observed. The H enhancement was shown to be a kinematic effect that arises from the ρ-band cuts in an essentially structureless 3π Dalitz plot.[5]

---

1. Wesley M. Smart, Study of Y_1^* Resonant Amplitudes Between 1660 and 2215 MeV in the Reaction $K^-N \to \Lambda\pi$, UCRL-17956, Dec. 1967.
2. V. Franco and R. J. Glauber, Phys. Rev. 142, 1195 (1966).
3. David G. Brown, πp Four-Prong Interactions Between 3 and 4 GeV/c (Ph.D. Thesis), UCRL-18254, May 1968; D. G. Brown, G. Gidal, R. W. Birge, R. Bacastow, S. Y. Fung, W. Jackson, and R. Pu, Quasi-Two-Body Final States Produced in π^+p Interactions Between 3 and 4 GeV/c, Phys. Rev. Letters 19, 664 (1967).
4. G. Gidal, D. G. Brown, R. W. Birge, R. Bacastow, S. Y. Fung, W. Jackson, and R. Pu, Resonance Production in π^+p Interactions Between 3 and 4 GeV/c, UCRL-17984, Dec. 1967, presented at Third Topical Conference on Resonant Particles, Athens, Ohio, November 22-24, 1967.
5. S. Y. Fung, W. Jackson, R. T. Pu, D. Brown, and G. Gidal, Evidence for the Kinematic Origin of the H Enhancement, UCR-34 P107-64, March 1968 (submitted to Phys. Rev. Letters).

We have measured approximately 80 000 two-prong events on the FSD to study such quasi-two-body states as $N^*\pi^0$ and ρ^+p. We have observed a dip in the differential $N^*\pi^0$ cross section near $t = -0.5$ as expected for a ρ-trajectory exchange model.

STUDY OF THE REACTION $\pi^+p \rightarrow \eta^0\Delta^{++}$

Giovanni Borreani, George Gidal, and George E. Kalmus

We have studied the reaction $\pi^+p \rightarrow \pi^+p\,\pi^+\pi^-\pi^0$ in the 72-inch H_2 bubble chamber at 1.35, 1.45, and 1.68 GeV/c.

We observe strong η production at all energies. A prominent ω peak is also observed at 1.68 GeV/c.

We have isolated 562 events with η production. These show a dominant Δ^{++} peak in the remaining π^+p invariant mass at the two highest energies and some evidence of Δ^{++} production at 1.35 GeV.

A preliminary analysis of the angular distributions for the reaction $\pi^+p \rightarrow \eta^0\Delta^{++}$ shows that the reaction proceeds nonperipherally and that no obvious single resonance behavior in the s channel is present.

STUDY OF THE STRANGE-PARTICLE CHANNELS IN π^+p AT 1.34, 1.43, AND 1.68 GeV/c

Giovanni Borreani and George E. Kalmus

The $\pi^+p \rightarrow \Sigma^+K^+$ channel is being studied in detail. The whole film has been scanned twice and measured for this channel. Angular distributions, polarizations, and total cross sections are being analyzed. The film has also been scanned for the channel $\pi^+p \rightarrow \Lambda K^+\pi^+$, and it is partially measured.

TWO-PRONG EVENTS IN π^+p FILM AT 1.35, 1.43, AND 1.68 GeV/c

Robert W. Birge and George E. Kalmus

This work is in collaboration with a group at University of California—Riverside.

A total of about 110 000 events has been measured on the FSD. These are currently being analyzed, particularly for the inelastic channel $\pi^+p \rightarrow N^*\pi$. We hope also to obtain good total cross sections for the various channels with two-prong topology.

In this analysis the ionization information obtainable from the FSD is proving very useful.

ON-LINE SYSTEM

Robert W. Birge and P. Wes Weber

During this period the MP1E Franckenstein of the Trilling-Goldhaber group was put on-line and started in production. Our second Franckenstein (MP1D) was also put on-line and preliminary measurements were started. The automatic film-advance mechanism on this latter machine has proved a very useful addition. A good deal of measurement time was used for events that had twice been rejected by the FSD, and this, coupled with a lack of film to be measured (due to slow startup of the new Bevatron run), cut down the total output.

Numerous small improvements were made in the operating system programs, and general operating and maintenance procedures were developed to cope with around-the-clock operation.

DATA REDUCTION

Robert W. Birge and P. Wes Weber

With an average of 22.5 (full-time equivalent) visual measurement personnel, the following data reduction was accomplished in the past six months.

Scanning

Experiment	Bubble chamber	Beam		Number of frames
COBWEB System				
32	25-inch hydrogen	850 to 1150-MeV/c K^-		3 356
34	25-inch deuterium	850 to 1150-MeV/c K^-		15 339
36-41	72-inch hydrogen	3.3 to 4.1-BeV/c π^+		29 365
42-44	72-inch hydrogen	1.35 to 1.68-BeV/c π^+		27 941
			Subtotal	76 001
FSD System				
36-41	72-inch hydrogen	3.3 to 4.1-BeV/c π^+		28 167
42-44	72-inch hydrogen	1.35 to 1.68-BeV/c π^+		60 675
			Subtotal	88 842
			Total	164 843

Measuring

COBWEB system	Measuring hours	Number of events	Events per measuring hour
(1 measuring microscope, 2 MP1-type Franckensteins)	1 860[a]	13 743[a]	7.4
FSD system			
(2 SP5B-type image plane digitizers)	5 200	99 548	19.1
	7 060	113 291	

a. These numbers are far below capacity because only 2 machines were on-line only 16 hr/day, 5 days/week, and the film to be measured was depleted in January. The next report should reflect more accurately the capability of the COBWEB system, as we are currently operating around the clock, 7 days/week, an additional Franckenstein is now operating, and there is a measurement backlog being created from recently exposed film.

PUBLICATIONS AND PAPERS

Powell-Birge Group

1. G. Gidal, D. Brown, R. W. Birge, R. Bacastow, S. Y. Fung, W. Jackson, and R. T. Pu, Resonance Production in π^+p Interactions Between 3 and 4 GeV/c, UCRL-17984, Dec. 1967, presented at Third Topical Conference on Resonant Particles, Athens, Ohio, November 22-24, 1967.
2. Wesley M. Smart, Study of Y_1^* Resonant Amplitudes Between 1660 and 2215 MeV in the Reaction $K^-N \rightarrow \Lambda\pi$, UCRL-17956, Dec. 1967, submitted to Phys. Rev.
3. G. Borreani, G. Gidal, and G. Kalmus, Study of the Reaction $\pi^+p \rightarrow \eta^0\Delta^{++}$, Bull. Am. Phys. Soc. 13[4], 589 (1968).
4. G. Gidal and G. Borreani, Reaction $\pi^+p \rightarrow \Sigma^+K^+$, Bull. Am. Phys. Soc. 13[4], 589 (1968).

EXPERIMENTAL PHYSICS

Emilio Segrè and Owen M. Chamberlain in charge

MUON POLARIZATION IN THE DECAY $K^+ \rightarrow \pi^0 + \mu^+ + \nu$ ($K^+_{\mu 3}$)

David Cutts, Martin Deutsch,* Rae Stiening, and Clyde Wiegand

We have measured the total polarization of the muon in the decay $K^+ \rightarrow \pi^0 + \mu^+ + \nu$ in a spark-chamber experiment at the Bevatron. Our data consist of 3133 events with visible μ^+-e^+ decays and complete $K^+_{\mu 3}$ kinematics. From the angular distribution of the muon decay positrons we have determined the vector giving the muon polarization, and have related this measurement to a determination of the form-factor ratio ξ. Our analysis, which has been completed, gives $\xi = -0.95 \pm 0.3$ if ξ is real and if the form factors are constant. The results of this work have been published,[1] and have been presented at the Washington meeting of the American Physical Society, April 1968.

STUDY OF THE DECAY $K^+ \rightarrow \pi^+ + \pi^0 + \gamma$

Peter Kijewski, David Cutts, Martin Deutsch,† Rae Stiening, and Clyde Wiegand

We have searched through the data of our Bevatron stopping-K^+ run for examples of the reaction $K^+ \rightarrow \pi^+ + \pi^0 + \gamma$, $\pi^0 \rightarrow \gamma + \gamma$. The final products of this reaction are a charged pion and three gamma rays which we detect in our spark chambers. From the momentum of the pion, which we determine from its range, and from a measurement of the points at which the three gamma rays convert, we are able to isolate events of this type. We have identified 25 events. By measuring the distribution in the angle between the charged pion and the gamma ray which does not come from π^0 decay, we can distinguish between direct radiation and inner bremsstrahlung. Within errors, we find no evidence for direct radiation.

MEASUREMENT OF THE π^0 ENERGY SPECTRUM IN $K^+ \rightarrow \pi^0 + \mu^+ + \nu$

Peter Kijewski, David Cutts, Martin Deutsch,‡ Rae Stiening, and Clyde Wiegand

We are measuring the π^0 energy spectrum in the decay $K^+ \rightarrow \pi^0 + \mu^+ + \nu$ in order to determine the form-factor ratio $\xi = f_-/f_+$. We have accumulated over 3000 events with completely reconstructed kinematics. If the form factors are independent of momentum transfer, the π^0 spectrum is a straight line and the slope gives a measurement of ξ. We expect that the error in the determination of ξ, subject to the assumption of constant form factors, will be ± 0.2. We are also investigating the effect of a momentum-transfer dependence of the form factors.

---

*Massachusetts Institute of Technology
†Massachusetts Institute of Technology
‡Massachusetts Institute of Technology

1. D. Cutts, R. Stiening, C. Wiegand, and M. Deutsch, Phys. Rev. Letters 20, 955 (1968).

A STUDY OF THE DECAY $K^+ \rightarrow \mu^+ + \nu + \gamma$

Min Chen, David Cutts, Martin Deutsch,* Rae Stiening, and Clyde Wiegand

We have searched through the data of our Bevatron stopping-K^+ experiment for examples of the decay $K^+ \rightarrow \mu^+ + \nu + \gamma$. Candidates were recognized by the presence of a charged particle, assumed to be a muon, having a kinetic energy between 136 and 142 MeV (except for very rare decays, the muons in this energy interval must come from the decay $K^+ \rightarrow \mu^+ + \nu + \gamma$) and a converted gamma ray. We have found 27 events that satisfy these conditions. The distribution of these events in the angle θ, the angle between the muon and gamma-ray momenta, is consistent with the distribution predicted by inner bremsstrahlung. We have found no evidence for direct radiation. The number of events with $\cos\theta < -0.9$ is 2 ± 2. We can set an upper limit of 2×10^{-5} for the branching ratio for direct radiative decay. Our analysis of these data is continuing.

η LEPTONIC DECAYS

Min Chen, Roger Hildebrand,† Rae Stiening, and Clyde Wiegand

An experiment to measure the branching ratio for the decays $\eta \rightarrow \mu^+\mu^-$ and $\eta \rightarrow \mu^+\mu^-\gamma$ is being prepared for running at the Bevatron. A measurement of the branching ratio for $\eta \rightarrow \mu^+\mu^-$ can be used to test the principle of unitarity, which sets a lower limit of 2×10^{-6} on this branching ratio, and as a determination of the high-energy behavior of the $\eta_{\gamma\gamma}$ form factor.[1] The branching ratio for $\eta \rightarrow \mu^+\mu^-\gamma$ will be measured to test the theoretical idea of vector dominance of the form factor. If the $\eta_{\gamma\gamma}$ form factor is dominated by vector mesons with a mass ≈ 800 MeV, the form factor at $m^*_{\mu\mu} = 300$ MeV should be 25% larger than at $m^*_{\mu\mu} = 0$. The value at $m^*_{\mu\mu} = 0$ is determined by the rate of $\eta \rightarrow \gamma\gamma$.

NUCLEON-NUCLEON INTERACTIONS

W. Chinowsky, P. Schmidt, W. Gage, and S. Klein

Measurement of 6-GeV/c pd interactions continues. The major effort has been measurement of about 10 000 four-prong and six-prong events including a spectator proton. These should yield a good sample of four-constraint events of the type $np(p) \rightarrow pp\pi^-(p)$ and $pp\pi^+\pi^-\pi^-(p)$ and so should be particularly illustrative of production processes of $T = 1/2$ nucleon isobars and ρ and ω mesons. We have improved the data reduction program to permit better use of FSD bubble-density measurements. These allow more effective use of the computer to select among ambiguities in identification of outgoing particles not resolved by kinematical criteria.

Further analysis of 6-GeV/c pp interactions has been made with the data available from previously completed measurements. A paper reporting results on $Y^{*+}K^+$ and $N^{*++}(1236)\rho^0$ decays of a nucleon isobar is in press (Phys. Rev.).

We have analyzed the $pn\pi^+$ and $pp\pi^0$ states to determine evidence of $N^*(1400)$ production. A paper describing an effect consistent with the inelasticity of the s-channel "Roper" resonance is in preparation. Because of the availability of πp phase-shift data, a rather detailed analysis of these three-body final states with a one-pion exchange model is possible. The effects of

*Massachusetts Institute of Technology.
†University of Chicago.
1. S. Berman and D. Geffen, Nuovo Cimento 28, 1192 (1960).

interference between the amplitudes for the pion-exchange diagrams have been determined to be small. In particular, such interference does not generate spurious peaks in the pion-nucleon spectra. With the inclusion of Duerr-Pilkuhn t-dependent vertex correction functions, the OPE model gives reasonable agreement with the data. This analysis is continuing.

In the same pictures (6-GeV/c pp) we have investigated the three observable final states $\Lambda NK\pi$ with a one-pion-exchange model, and have found fine agreement with the experimental data. The presence of $N^*(1236)$, $Y^*(1385)$, and $K^*(890)$ has been observed, and the production rates have been measured.

π^-p INTERACTION AT 550 MeV/c

W. Chinowsky, P. Schmidt, and W. Gage

Measurement of approximately 15 000 interactions has been completed, using an image-plane digitized measuring projector. About two-thirds of the events fit elastic scattering. The angular distribution agrees with that expected from phase-shift analyses of other data. The kinematics distinguishes, essentially with certainty, between $\pi^-\pi^0p$ and $\pi^-\pi^+n$. Dalitz plots for these states show evidence of final-state interactions. Analysis will be part of a larger program using results at other incident momenta in addition to these.

$\bar{p}p$ INTERACTIONS

M Mandelkern,* W. Chinowsky, R. Burns,* P. Condon,* J. Schultz,* and P. Schmidt

To date, we have measured and are analyzing 25 000 events of all topologies produced by incident $\bar{p}$ with momenta between 675 and 1120 MeV/c. A scan for events with K^0's in 220 000 frames has been completed. We are studying the energy dependence of the partial cross sections for $\bar{p}$-p interactions and in particular that for backward elastic scattering, a process for which data at nearby energies suggest the presence of a peak within this energy region.

PIONIC ATOMS

Raymond Kunselman and Georges-André Grin†

A cyclotron run has been prepared and has just begun. A selection of samples is being used as targets to form pionic atoms and produce transition x rays. The emphasis is on chemical effects on the intensities of the x-ray lines in compounds.

POLARIZATION IN π^+p AND π^-p ELASTIC SCATTERING FROM 250 TO 410 MeV

William Gorn, Charles C. Morehouse, Thomas M. Powell, Peter R. Robrish, Stephen Rock, Stephen Shannon, Herbert Steiner, and Howard Weisberg

These data are still being reduced. The work has been slow partly because of other activities, particularly getting ready for the experiment to measure the polarization in the np charge-exchange reaction. The data reduction should be complete within a few months. It is not expected that the final results will be very different from the preliminary results currently available, but it is important to clean up a number of small matters.

---

*Department of Physics, University of California, Irvine.
†On leave from Institute de Physique Nucleaire, Université de Lausanne, Lausanne, Switzerland.

PHASE-SHIFT ANALYSIS OF $\pi^{\pm}p$ ELASTIC-SCATTERING EXPERIMENTS

Claiborne H. Johnson, Jr., Owen Chamberlain, Richard Field, Jr., and Herbert Steiner

A paper is being written to describe in detail the status of phase-shift solutions other than the generally accepted one. The alternative solutions show, for the most part, resonances in the same channels and at about the same energies as the usually accepted solution, but the resonance parameters in some cases are materially changed and in some cases there are marked differences in the states of small angular momentum. The interpretation of the data gets more precarious at the higher energies, particularly above 1100 MeV. Once this paper is written we plan to discontinue extensive work in this area, at least until more new data are available.

SEARCH FOR T VIOLATION IN INELASTIC ep SCATTERING

Owen Chamberlain, Gilbert Shapiro, Howard L. Weisberg, Peter R. Robrish, Stephen Rock, Stephen Shannon, Richard Taylor,* Luke Mo,* Elliot Bloom,* John Litt,* Henry Kendall,† and Jerome Friedman†

Design of the experiment is continuing. To avoid excessive destruction of the polarization of the target due to beam irradiation, the electron beam is to be swept over the whole polarized target in a fashion similar to the raster used on a television screen. This sweeping of the beam is to be accomplished by two coils (air core) that are located at the end of the electron-beam switchyard of the SLAC accelerator, about 180 ft from the polarized target. The magnets, here usually referred to as "Helmholtz coils," have been constructed at SLAC and can be tested in their final location in July. The beam can probably be moved about 2 mm between beam bursts of the SLAC machine.

Using data obtained from magnetic-tape records from various SLAC experiments that have used the same spectrometers that we will be using, we have tested the reliability of the spectrometer-monitor combination by seeing whether the data showed any false asymmetries when broken into 10-sec, 20-sec, and 40-sec intervals. The test indicates that the reliability of the apparatus is quite adequate, up to the level of accuracy obtainable when analyzing 300 000 counts. This test indicates that it will not be necessary to have separate runs carried out on the SLAC accelerator for the sole purpose of testing reliability and consistency. It seems likely that some further analysis along the same lines to a higher precision would be worthwhile, even though the necessary cost in computer time is not negligible.

There has been some difficulty in routinely obtaining even 20 percent proton polarization in the ethanol-water-porphyrexide target. The reasons are not well known, but there is a strong suspicion that when the mixture is warmed to room temperature for some time, then again cooled to helium temperatures, the polarization improves. Further tests must be run. There is doubt about whether the thermal conductivity of the mixture is sufficient. According to present schedule, the experiment is to be run at SLAC in the early months of calendar 1969.

*Stanford Linear Accelerator Center, Stanford University, Stanford, California.
†Massachusetts Institute of Technology, Cambridge, Massachusetts.

POLARIZED-PROTON TARGET IMPROVEMENTS

Owen Chamberlain, William Gorn, Charles Morehouse, Thomas Powell, Peter Robrish, Stephen Rock, Stephen Shannon, Gilbert Shapiro, and Howard Weisberg

A horizontal cryostat of the continuous-flow type first made by Roubeau of the Saclay Laboratory is under construction. The parts are being finished in the shops, and a test of the new cryostat should be possible within a few months. Besides allowing horizontal orientation of the target, the Roubeau cryostat should be operable with less consumption of liquid helium, with considerable cost savings. Some practice with the new cryostat is thought to be necessary before its operation can become routine, for the Roubeau system requires experience in its adjustment before it can be expected to do its job.

The new polarization readout system (1260 system) has been built in a 105-MHz version. It does not show a smooth tuning curve, for reasons as yet not understood. It may have a rather sharp resonance built into it near 105 MHz which will have to be found and altered in frequency. The effect causes a change in amplitude of about 1 part in 1000, so is not simple to find, but it is rather important that it be found and eliminated. The system is usable as it is, but at present it is very hard to align properly.

PUBLICATIONS AND PAPERS

1. Claiborne Johnson, Jr., and Herbert Steiner, Pion-Proton Elastic Scattering: Low Energy Experiments and Phase-Shift Analyses, UCRL-18001, December 1967; in Proceedings of the πN Scattering Conference held at the University of California—Irvine, December 1-2, 1967 (John Wiley & Sons, New York, to be published).
2. D. Friedell, M. Deutsch, D. Cutts, R. Stiening, and C. Wiegand, A Limit on the Branching Ratio $K^+ \rightarrow X^+ + \gamma$, MIT-2098-389, December 1967.
3. M. Chen, D. Cutts, P. Kijewski, R. Stiening, C. Wiegand, and M. Deutsch, Search for the Direct Decay $K^+ \rightarrow \pi^+ + \gamma + \gamma$, Phys. Rev. Letters 20, 73 (1968).
4. W. Chinowsky, R. R. Kinsey, S. L. Klein, M. Mandelkern, J. Schultz, F. Martin, M. L. Perl, and T. H. Tan, Production of K Mesons in Three-Body States in Proton-Proton Interactions at 6 BeV/c, Phys. Rev. 165, 1466 (1968).
5. D. Cutts, R. Stiening, C. Wiegand, and M. Deutsch, Measurement of the Total Muon Polarization in $K^+ \rightarrow \pi^0 + \mu^+ + \nu$, UCRL-18113, February 1968 (to be published).
6. W. Chinowsky, P. Condon, R. R. Kinsey, S. Klein, M. Mandelkern, P. Schmidt, J. Schultz, F. Martin, M. L. Perl, and T. H. Tan, Rare Decay Modes of $N^*(1950)$, UCRL-17651 Rev., Feb. 1968; submitted to Phys. Rev.
7. H. Weisberg, G. Shapiro, S. Shannon, S. Rock, P. Robrish, T. Powell, C. Morehouse, and W. Gorn, Effects of Radiation Damage on Polarized Proton Targets, Bull. Am. Phys. Soc., Series II, 13, 164 (1968).
8. B. Conforto, G. Fidecaro, H. Steiner, R. Bizzarri, P. Guidoni, F. Marcelja, G. Brautti, E. Castelli, M. Ceschia, and M. Sessa, Antiproton-Proton Elastic Scattering Between 63 and 175 MeV, Nuovo Cimento 54A, Series X, 441 (1968).
9. J. F. Arens, O. Chamberlain, H. E. Dost, M. J. Hansroul, L. E. Holloway, C. H. Johnson, H. M. Steiner, and D. M. Weldon, Measurement of Polarization in $\pi^- p$ Elastic Scattering from 229 to 390 MeV, Phys. Rev. 167, 1261 (1968).

10. D. Weldon, H. Steiner, G. Shapiro, C. Schultz, C. H. Johnson, Jr., L. Holloway, M. Hansroul, P. Grannis, B. Dieterle, O. Chamberlain, and J. Arens, Measurement of the Σ^- Polarization in the Reaction $\pi^- + p \rightarrow \Sigma^- + K^+$, Phys. Rev. 167, 1199 (1968).
11. B. D. Dieterle, J. F. Arens, O. Chamberlain, P. D. Grannis, M. J. Hansroul, L. E. Holloway, C. H. Johnson, Jr., C. H. Schultz, H. M. Steiner, G. Shapiro, and D. M. Weldon, Experimental Determination of the $K\Sigma N$ Parity Using a Polarized Target, Phys. Rev. 167, 1190 (1968).
12. P. Schmidt, W. Chinowsky, P. Condon, R. R. Kinsey, S. Klein, M. Mandelkern, J. Schultz, F. Martin, M. L. Perl, and T. H. Tan, Rare Decay Modes of $N^*(1950)$, abstract for the American Physical Society Meeting, Washington, D.C., April 22-25, 1968; post-deadline paper presented by P. Schmidt.
13. D. Cutts, R. Stiening, C. Wiegand, and M. Deutsch, Muon Polarization in the Decay $K^+ \rightarrow \pi^0 + \mu^+ + \nu$, Bull. Am. Phys. Soc., Series II, 13, 586 (1968).
14. S. Klein, W. Chinowsky, P. Condon, R. R. Kinsey, M. Mandelkern, P. Schmidt, and J. Schultz, Strange Four-Body Production in p-p Collisions at 6 BeV/c, Bull. Am. Phys. Soc., Series II, 13, 588 (1968).

ATOMIC BEAM GROUP

Howard A. Shugart in charge

ATOMIC BEAM STUDIES

The Atomic Beam Group continues to devote the major portion of its effort toward the systematic measurement of atomic and nuclear properties of radioactive isotopes. This research furnishes knowledge of parameters such as the nuclear spin, the electronic angular momentum, the nuclear multipole moments, the electronic g_J factor, the hyperfine interaction energy between the nucleus and electrons, and other more intricate interactions. In the long run these properties are used as input information in the evaluation of atomic and nuclear theories, and also provide valuable starting points for nuclear spectroscopic studies. All techniques employed in this work involve systems in which the atom is essentially unperturbed by neighbors, as in the atomic-beam method, or the atom is subjected to infrequent collisions, as in the optical-pumping or electron-impact excitation methods.

Owing to the relative simplicity of the system under study, interpretation of results assumes a particularly unambiguous form. This, coupled with the sensitivity of these methods, makes studies of rare radioactive species a productive endeavor.

Beyond the measurement efforts, the group explores new techniques which hold promise of revealing better understanding of physical laws and tries new applications of our standard methods.

The activity of the group during the past six months can be indicated by an enumeration of papers that have appeared in the literature or as reports.

PUBLICATIONS AND PAPERS

Abstracts

1. Tetsuo Hadeishi, Nuclear Alignment and Transfer of Its Coherence in Electron-Exchange Collisions, UCRL-18174, April 16, 1968; submitted for the Proceedings of The International Conference on Atomic Physics, New York City, June 3-7, 1968.
2. A. F. Oluwole, S. G. Schmelling, and H. A. Shugart, Nuclear Spin, Hyperfine Structure, and Nuclear Magnetic Moment of 83-Min ^{75}Ge in the $^3P_1$ Electronic State, Bull. Am. Phys. Soc. 13, 493 (1968).
3. J. Yellin and R. Marrus. Atomic-Beam Study of the Stark Effect in the Potassium Resonance Lines, UCRL-18045, February 1968.

Papers

1. Eugene D. Commins, Application of Atomic Beams to Elementary Particle and Nuclear Physics, Ann. Rev. Nucl. Sci. 17, 33 (1967) (previously reported as UCRL-17435, March 1967).

2. V. J. Ehlers, T. R. Fowler, and H. A. Shugart, Nuclear Magnetic Moment of ^{85}Rb: Resolving a Discrepancy, Phys. Rev. 167, 1062 (1968) (previously reported as UCRL-17792, September 1967).
3. V. J. Ehlers, Y. Kabasakal, H. A. Shugart, and O. Tezer, Hyperfine Structure of ^{67}Ga and ^{72}Ga, UCRL-17753, January 1968, submitted to Phys. Rev.
4. Tetsuo Hadeishi, Transfer of Nuclear Alignment Coherence in ^{131}Xe During Electron-Exchange Collisions, UCRL-18150, April 1968, submitted to Phys. Rev. Letters.
5. Tetsuo Hadeishi and Chung-Heng Liu, Alignment of Ionic Ground State of Xe by Electron Impact Ionization Observed Through Exchange Collision with the Neutral Metastable State, UCRL-17926, November 1967, submitted to Phys. Rev. (revision of UCRL-17430 previously reported).
6. A. T. Ramsey and S. Stein, The Ground-State Hyperfine Structure of ^{165}Dy, Phys. Rev. 165, 1360 (1968) (previously reported as UCRL-17678, July 1967).
7. S. Stein and A. T. Ramsey, The Ground-State Spin of ^{163}Er, UCRL-17992, January 1968, submitted to Phys. Rev.
8. P. A. Vanden Bout, A. Dymanus, V. J. Ehlers, M. H. Prior, and H. A. Shugart, Nuclear Spin, Hyperfine-Structure Separation, and Nuclear Magnetic Moment of 18-Min ^{88}Rb, Phys. Rev. 166, 1131 (1968) (previously reported as UCRL-17680, June 1967).
9. P. A. Vanden Bout, E. Aygun, V. J. Ehlers, T. Incesu, A. Saplakoglu, and H. A. Shugart, Precision Measurement of the Electronic g Factors of the Alkali Metals, Phys. Rev. 165, 88 (1968) (previously reported as UCRL-17668, July 1967).

Thesis

1. Sanford Stein, Hyperfine Structure of Dy^{165} and Spin of Er^{163}, UCRL-17969, December 1967.

EXPERIMENTAL PHYSICS

George H. Trilling and Gerson Goldhaber in charge

NEW 25-INCH BUBBLE CHAMBER BEAM

W. Ralph Butler, Donald G. Coyne, and John A. Kadyk

Magnet testing for the new beam was completed during this period, and the chamber placed in position in November. The initial tuneup of the beam was begun in March and completed in April. K^+ and K^- beams were successfully separated in the momentum range 1.0 through 1.5 GeV/c, with flux yields close to the values expected. From the results of this tuneup, it appears that the beam should separate K^+ and K^- up to the maximum design value of 2.0 GeV/c. Separate beams of $\pi^\pm$ and p are accomplished more easily, and these will be possible up to about 3.2 GeV/c. The beam design, testing, and tuneup has been a combined effort of the Trilling-Goldhaber and Powell-Birge groups, both of which will be major users, and the beam is expected to remain indefinitely as a facility to serve the 25-inch chamber.

Λ^0p INTERACTIONS

Gideon Alexander, S.-R. Gloria Fang, Peter Gaposchkin, Faysal M. Hamzeh, Roger A. Hess, John A. Kadyk, and George H. Trilling

Very little data exist concerning Λ^0p interactions at momenta greater than about 300 MeV/c. Thus the analysis of only about 100 events has been published to date. Interest centers about the theoretical predictions concerning a large cusp in the cross section at around 600 MeV/c due to the opening of Σ^0p channel, inelastic production, and various exchange mechanisms. A method is being explored to produce Λ^0 in sufficiently large quantities to allow detailed studies of the Λ^0p interactions.

A small sample of film has been taken using the 25-inch bubble chamber to study Λ^0p interactions. The new separated K^+/K^- beam was used to direct a 1.5-GeV/c K^- beam onto a 6-lb movable platinum bar installed in the chamber. The bar becomes a source of copiously produced Λ^0, which occasionally interact in flight. There is about a 1-1/2-in. gap in front of the plate for measurement of the incident K^- position and direction. When the plate is not in use, it is easily and quickly retractable by external control. A $\Lambda^0 \rightarrow p\pi^-$ decay was observed about every 3 pictures, and several $\Xi^- \rightarrow \Lambda^0\pi^-$ events have been observed in about 2000 pictures. Later in 1968 about 100 000 pictures are scheduled, and this should represent enough data to extract some useful information on the Λ^0p interaction.

LOW-ENERGY K^-p INTERACTIONS

Jonathan H. Chan and John A. Kadyk

An experiment using the 25-inch bubble chamber to study K^-p interactions in the momentum range 0 through 310 MeV/c, corresponding to center-of-mass energies 1432 through 1490 MeV, is in the initial stages of analysis. Several resonances in the I = 1 channel have

been reported or suspected in this region, and a search for these via the $\Lambda^0\pi^0$ channel is one objective. In the past, it has been quite difficult to separate this channel from the $\Sigma^0\pi^0$ channel by kinematics, but the septum separator, invented by J. Murray at LRL, has made possible a separated K^- beam at 400 MeV/c with 1% momentum resolution. With this precision of incident energy, it should be possible to separate the above channels with about 5% ambiguities. A second objective is the use of the measured $\Lambda^0\pi^0$ cross section to calibrate the K_2^0 absolute flux in a previous experiment by comparison to the observed $\Lambda^0\pi^+$ cross section in the same momentum range.

K^+d INTERACTION FROM 800 TO 1600 MeV/c

Roger Bland, Allan A. Hirata, Gerson Goldhaber, Victor H. Seeger, George H. Trilling, and Charles G. Wohl

We have film taken in the 25-inch bubble chamber at 860, 970, 1210, 1360, and 1580 MeV/c. We have completed obtaining data at all but 1580 MeV/c for all events marked by a $K^0 \to \pi^+\pi^-$ decay or by more than two outgoing tracks. These include the reactions

$$\begin{array}{lll} K^+d & \to K^0pp & \text{charge exchange,} \\ & \left.\begin{array}{l} \to K^0pp\pi^0 \\ \to K^0pn\pi^+ \\ \to K^+pp\pi^- \end{array}\right\} & \text{single-pion production,} \\ & \to KNN\pi\pi & \text{double-pion production.} \end{array}$$

The charge-exchange cross section falls off smoothly with increasing momentum. The single-pion-production cross sections rise very rapidly, increasing by a factor of five between 860 and 1210 MeV/c before leveling off. The double-pion production cross sections are still small at 1360 MeV/c. We are trying to understand the nature of the reactions--in particular, how they are related to and what they reveal about the bump in the I = 0 KN channel deduced from measurements of total K^+d and K^+p cross sections.

π^+p INTERACTION AT 3.7 GeV/c

W. Ralph Butler, Donald G. Coyne, Peter Gaposchkin, and Jimmie MacNaughton

We have continued measurement of the 180 000-picture sample of π^+p at 3.7 GeV/c (72-inch LH chamber). Of this sample, about two-thirds has now been prepared for the Flying-Spot Digitizer (i. e., road-made), and about 26 000 events have been completely processed, including scan-table confirmation.

Study has begun on a variety of reactions, using the 26 000 events. In particular, the $p\pi^+\pi^+\pi^-\pi^0$ state is being used to look for the B and H effects, the $p\pi^+\pi^+\pi^-$ MM state is used for η' production, and the $p\pi^+\pi^0$ state can be used to study ρ^+ and N^{*++} production. Study of the strange-particle final states will occupy more of our interest as the data sample becomes statistically significant.

The above sample of 26 000 events contains only ≈2000 four-prong, four-constraint fits, but by logical selection of events not yet checked at a scan table, we have increased this particular sample to over 7000 events. The increased sample has been used to study the A-effects ($\pi^+\rho^0$ invariant mass), and the data were submitted to the Philadelphia Conference on Meson

Spectroscopy (April 1968). We are now also studying the A_2 splitting effects with the same sample and that from the final-state $p\pi^+$ (missing mass).

Work continues on the logical selection of good events by utilization of FSD ionization measurements, with indications that even a crude approach will yield useful positive separation at this momentum.

K^+p INTERACTIONS AT 9 GeV/c

Gideon Alexander, Alexander Firestone, Chu Min Fu, and Gerson Goldhaber

We have continued the study of 100 000 stereo exposures of K^+p interactions at 9 GeV/c. The film was taken with the Berkeley cameras in October 1966 at the Brookhaven National Laboratory 80-inch hydrogen bubble chamber exposed to an rf-separated K^+ beam.

In a study of the events with a visible antilambda hyperon decay in the bubble chamber, we have identified 128 events of the types $\bar{Y}pp$ (11.4±2.3 μb), $\bar{\Lambda}pp\pi^0$ (9.0±2.0 μb), $\bar{\Lambda}pn\pi^+$ (35.2±4.0 μb), and $\bar{\Lambda}pp\pi^+\pi^-$ (2.7±1.1 μb). We observe a strong enhancement for low mass values in the $\bar{Y}^0n$ mass distribution. Such a system can have the quantum numbers of a positive-strangeness boson. If we interpret our result as a resonance, it would correspond to an I = 1/2 K^* resonance with M = 2240±20 MeV and Γ = 70±20 MeV. The results of this study have been published.[1]

A total of 623 events have been identified with a visible lambda hyperon decay in the bubble chamber. These include 288 events fitted to hypotheses $Y^0K^+K^+$, $\Lambda^0K^+K^+\pi^0$, $\Lambda^0K^+K^0\pi^+$, and $Y^0K^+K^+\pi^+\pi^-$, and 335 events which fit only well-identified Λ^0 hyperon decays. We have searched for S = 2 bosons in the final states K^+K^+ (I = 1), K^0K^+ (I = 1, I = 0), and $KKn\pi$ ($n \geq 1$), and observe no statistically significant evidence for resonances in the mass region 1.0 to 3.1 GeV. In addition, we observe no evidence for an S = 2 resonance in a plot of the missing mass recoiling against the Λ^0 hyperon, for both fitted and unfitted events. This work has also been published.[2]

At present we are studying events of the type $K^+p \rightarrow K^+p\omega$, $\omega \rightarrow \pi^+\pi^-\pi^0$ (437 events) and $K^+p \rightarrow K^+p\phi$, $\phi \rightarrow K^+K^-$ (51 events) and are attempting to fit the data to a double-Regge multiperipheral model.

In addition to the above we have obtained in April 1968 an additional 150 000 photographs under approximately the same conditions as the original film. Scanning and measuring of this film has begun on the Flying-Spot Digitizer, and we hope to benefit soon from the improved statistics which will enable us to study in greater detail the four-body final states $K^+p\pi^+\pi^-$ and $K^+pK^+K^-$. Specifically, we hope to study the mass, width, and if possible spin parity of the $K^*(1250)$,[3] and perhaps determine the structure and spin parity of the L meson. We shall also study the $\bar{\Lambda}n$ enhancement with the improved statistics for possible information on the spin parity of this system.

---

1. G. Alexander, A. Firestone, G. Goldhaber, and B. C. Shen, Evidence for a Mass Enhancement in the $\bar{\Lambda}N$ System, Phys. Rev. Letters 20, 755 (1968).
2. G. Alexander, A. Firestone, and G. Goldhaber, Search for S = 2 Boson Resonances in the Mass Region of 1.0 to 3.1 BeV, submitted to Physics Letters (UCRL-18236, May 1968).
3. G. Goldhaber, A. Firestone, and B. C. Shen, Evidence for $K^*(1250)$ Resonance Production in K^+p Interactions at 9 BeV/c, Phys. Rev. Letters 19, 972 (1967).

PUBLICATIONS AND PAPERS

1. G. Alexander, A. Firestone, G. Goldhaber, and B. C. Shen, Hyperon Production in K^+-p Interactions at 9 GeV/c, Bull. Am. Phys. Soc. 13, 704 (1968).
2. G. Alexander, A. Firestone, G. Goldhaber, and B. C. Shen, Evidence for a Mass Enhancement in the $\bar{\Lambda}$N System, Phys. Rev. Letters 20, 755 (1968); UCRL-18100, February 19, 1968.
3. C. Fu, A. Firestone, G. Goldhaber, G. H. Trilling, and B. C. Shen, The $K^+p \rightarrow K^+\pi^-\Delta^{++}$ Interaction at 4.6 and 9 BeV/c, contribution to the Informal Meeting on Experimental Meson Spectroscopy, Philadelphia, April 26-27, 1968; UCRL-18201, April 18, 1968.
4. Gerson Goldhaber, K^* Spectrum and Diffraction Dissociation Effects (Including A_1) or A Look at Bosons in a Strange Light, invited talk at the Informal Meeting on Experimental Meson Spectroscopy, Philadelphia, April 26-27, 1968 (to be published in Proceedings).

HEALTH PHYSICS

H. Wade Patterson in charge

DOSIMETRIC CALCULATIONS

Gerald M. Litton, Palmer G. Steward, and Roger W. Wallace

A method for calculating the range and stopping power of any nongaseous medium for heavy ions has been developed and programmed in Fortran IV for the CDC-6600. The method is valid in the specific energy interval $0.01 \leq \mathcal{E} \leq 1200$ MeV/amu for ions with Z at least as large as 92. The method utilizes experimental data wherever available, and the theories of Lindhard and Bethe. Elastic nuclear Coulomb stopping power is included at low energies. The work is reported in UCRL-17314 (Dec. 1966) and UCRL-18127 (May 1968 - Ph. D. Thesis).

The penetration of heavy ions and the shape of the resulting Bragg peak for ions with Z as high as 92 and energies up to 500 MeV/amu in a variety of targets have been calculated utilizing the above stopping power, with removal due to nuclear interactions, multiple scattering, energy straggling, and initial energy and angular spread of the beam taken into consideration. This work has been reported.[1]

Additions to the above calculations have been made, which allow the inclusion of effects due to the slowing down of secondary particles which are the result of nuclear interactions. Representative secondary spectra have been used to ascertain the effects due to secondary production on the overall flux and energy deposition in the absorber.

TRACK DETECTORS

Harold A. Wollenberg and H. Wade Patterson

Foils of Bi, Au, Ta, Cu, Al, and a bare flake of muscovite were exposed in-line to a 230-MeV neutron beam at the 184-inch cyclotron. The downstream faces of the metal foils were covered with pieces of muscovite which were subsequently etched, permitting measurements of track densities. The responses of the Bi, Au, and Ta foils were consistent with published cross sections. Appreciable track densities associated with the Cu and Al foils, and the wide disparity between track densities on the downstream and upstream faces of the bare mica ($\rho_{downstream}/\rho_{upstream} \cong 6$) suggest that there are measureable interactions between 230-MeV neutrons and target nuclei with low to moderate mass numbers. This effect may be useful in high-energy neutron spectroscopy.

---

1. Gerald M. Litton, Program BRAGG: a Fortran-IV Program for Calculating Bragg Curves and Flux Distributions, UCRL-17391, February 1967; Gerald M. Litton, Bragg and Flux Curves and Energy Spectra Due to the Penetration of High-Energy Heavy Ions, Including Effects Due to Multiple Scattering, Nuclear Interactions, Straggling, and Energy and Angular Distribution in the Initial Beam (Ph. D. Thesis), UCRL-17392, August 1967.

ANALYSIS OF ERRORS IN THE EVALUATION OF FLUX AND DOSE

Alessandro Rindi

A study was begun for analyzing the errors involved in the routine measurement of fluxes and dose rates with standard instrumentation. The results of previous complete measurements made around the LRL and CERN accelerators will be used for forecasting the errors in the routine survey. Correction factors to be applied for approaching the true flux and dose rate from the reading of only two or three detectors in the conventional fields will be calculated.

GRAPHICAL TECHNIQUE FOR ESTIMATING ACTIVITY LEVELS PRODUCED IN THERMAL- AND FISSION-NEUTRON IRRADIATION

Jorma T. Routti

A graphical method for estimating the activities induced in neutron irradiation was developed. The calculated saturation activities of the products of most activation reactions are represented on two activation charts. A transparent overlay is employed to make corrections for the saturation, decay, and counting factors. This work has been reported[1] and published.[2]

PHOTOPEAK ANALYSIS OF SEMICONDUCTOR GAMMA-RAY SPECTRA BY COMPUTER

Jorma T. Routti and Stanley G. Prussin

The development of a method for the analysis of semiconductor gamma-ray spectra and the associated general-purpose computer program SAMPO was continued. Provisions to run complete on-line analysis using a CRT display system were included in the code.

The program has been used extensively for the reduction of data from both Ge(Li) and NaI(Tl) systems including very complex fission product spectra.[3]

ENVIRONMENTAL RADIATION STUDIES

Harold A. Wollenberg, Alan R. Smith, and H. Wade Patterson

A compilation of γ spectrometric data from soil samples collected at 27 fallout-monitoring locations in the San Francisco Bay Area indicates that natural γ-ray dose rates range from 3 to 13 μr/h, with a modal value of 5.5 μr/h (a ten-year γ-ray background dose of 480 mr). Analysis of radioactivity measurements made with a portable NaI counter at these locations from March 1958 through March 1968 yields an average fallout γ-ray ten-year integrated dose of 280 mr, assuming that the fallout was deposited evenly with respect to time. If it is assumed that all fallout during a time interval between measurements is deposited immediately prior to a measurement, the average ten-year integrated dose is 240 mr, while if deposition were immediately after a measurement, an average of 400 mr would have been deposited in the Bay Area since 1958.

---

1. Jorma T. Routti, Graphical Technique for Estimating Activity Levels Produced in Thermal- and Fission-Neutron Irradiation, UCRL-17463, March 1967.
2. Jorma T. Routti, Analytical Chemistry 40, 593 (1968).
3. J. B. Wilhelmy, S. G. Thompson, J. O. Rasmussen, and J. T. Routti, Spectroscopic Studies of Short-Lived Fission Products, UCRL-18248 Abstract, May 1968.

RADIOGEOLOGY

Harold A. Wollenberg and Alan R. Smith

We began studies of natural radioactivities of granitic terranes west of the San Andreas fault in the Coast Ranges. Field radiometry and γ spectrometry of samples from the Ben Lomond massif in the Santa Cruz mountains show a range of U, Th, and K contents matching the range of values observed previously over a much broader area in the Sierra Nevada batholith.

The uranium content of sphene in petrographic thin sections from five plutons in the central Sierra Nevada was determined by the fission-track method. There is a log-normal distribution of U wherein the mode is 175 ppm and values range from 80 to 525 ppm.

SPARK CHAMBER

Alessandro Rindi and Harold Wollenberg

In conjunction with Victor Perez-Mendez' group we have been gaining experience in the construction, assembly, and operation of magnetostrictive-readout wire spark chambers, and are participating in the development of a chamber for gamma-ray detection. This chamber, in connection with a computer, will be used for the two-dimensional location of radioisotopes in the human body. A study of the possibility of direct triggering of such a chamber is also under way.

PUBLICATIONS AND PAPERS

1. William W. Wadman III, Shielding Attenuation of Neutrons from 80-MeV α-Particle Bombardment of Elemental Tantalum, UCRL-16359 Revised, November 1967.
2. Jorma T. Routti, Graphical Technique for Estimating Activity Levels Produced in Thermal- and Fission-Neutron Irradiation, Analytical Chemistry 40, 593 (1968).
3. H. A. Wollenberg and A. R. Smith, Radiogeologic Studies in the Central Part of the Sierra Nevade Batholith, California, J. Geophys. Res. 73, 1481 (1968).

Computing and Data Handling

MATHEMATICS AND COMPUTING

James A. Baker in charge

INTRODUCTION

During the period of this report (November 1967 through April 1968), members of the Mathematics and Computing Services Group performed programming and mathematical tasks for the Laboratory research groups. These tasks may be divided roughly into the following eight general classifications:

1. Physics Applications Programming
2. Nuclear Chemistry
3. Accelerator and Magnet Design
4. Biomedical Applications
5. Miscellaneous
6. Systems Programming
7. Research in Mathematics and Computer Science
8. Computer Operations

The following summarizes the work of this Group in the above areas.

I. APPLICATIONS PROGRAMMING

A. PHYSICS

For Powell-Birge Group

Herbert C. Albrecht, Harold Hanerfeld, Myron H. Myers, Joan Tyson, and John Visser, Jr.

Bookkeeping System

Development continued on the bookkeeping program, BOOKY, to make full use of its capability and to expand its scope. The master list record was expanded and particle range information added to it. Users can now "manually" supersede or add events to a master list. This system is being used to generate scan cards for those events which either were manually scanned or were rejected by the FSD, so that they can be measured by the COBWEB[1] System.

A small version of the central master-list program, BOOKY, was written to facilitate rapid turn-around time for master list inquiries.

The new program EFFORT, using master list data, tabulates the performance of various scanners within an experiment.

---

1. Eugene P. Binnall and Myron H. Myers, COBWEB: IBM 7044/On-Line Bubble Chamber Film Measuring Machines, UCRL-17136, Sept. 1966.

A program DSPLAY has been written to calculate and display weights and likelihoods for sigma polarization. This program utilizes the MODULES[2] package, and is currently in production status.

COBWEB System

The COBWEB project, a computer-controlled bubble chamber film measuring system, continues to expand. Presently connected to the system are three Franckensteins, a measuring microscope, and a scan-table teletype.

An Input-Output package, functional for all peripheral devices connected to the IBM 7044, was developed. It allows far more computing during I/O operations than the other available routines.

A new package of formatting routines was written to replace the standard IBM library routines which interpret BCD input-output statement lists and format statements. These routines use fixed-field formats and enable the user to output print lines of data in integer, octal, BCD, and E or F floating-point formats. This scheme is faster and also uses less core memory than the IBM method.

A computer-controlled film-drive feature was implemented. It drives film from view to view of an event and also from event to event. At any time, usually at the beginning of a roll, the measurer can type in the current frame position in the reader, and the program will drive the film to the proper view of the event to be measured.

The CDC 6600 editing program, COBEDIT, was written to convert COBWEB output tapes to formats compatible with existing data-analysis sytems.

Software design work has started on a teletype multiplexer that will communicate with ten scan-table teletypes.

The program HIGH[3] was used to generate high energy events of the type

$$k^- + p \rightarrow \Sigma^+ + \pi^- + \pi^0$$
$$\hookrightarrow \pi^+ + N.$$

The initial beam momentum was set at 100 GeV/c. The events generated were then kinematically reconstructed by the program BISE.[4] The reconstructed events were studied to determine the difficulties in obtaining the correct event types. It was found that the increase in arithmetic significance of the CDC 6600 over the IBM 7094 produced more correct reconstructions. It was further found that the

$$\Sigma^+ + \pi^- + \pi^0$$
$$\hookrightarrow p + \pi^0$$

solution occurred about 17% of the time and that the

$$\Sigma^+ + \pi^- \hookrightarrow \begin{cases} \pi^+ + N \\ p + \pi^0 \end{cases}$$

solutions never occurred.

2. Physics Division Semiannual Report (henceforth abbreviated "PDSR"), UCRL-17876, Nov. 1967, p. 51.
3. PDSR, UCRL-17544, May 1967, p. 37.
4. Harold Hanerfeld, BISE: A Two-Vertex Kinematics Program, UCRL-17473, March 1967.

For Trilling-Goldhaber Group

Derik Armstrong, Emmett R. Burns, Jr., Bronwyn H. Hall, Daniel P. Lamb, and James G. Miller

The emphasis during the last six months has been on optimizing the production programs by reducing the core size and the tunning time per event. Various programs and subroutines were written as they were needed, and the normal maintenance work was continued for existing programs.

Several new features have been added to the program TGIF[5] in order to allow the user more freedom in its use and easier access to the data for debugging purposes. These include a TGIF-SIOUX version and selective printout and histogram capabilities. A continuing effort is still under way to decrease further the number of remeasurements required for events coming from the FSD.

Work has been completed for one experiment and is in progress for another in the area of decreasing the core size and running time of SIOUX[6] by recoding the event types. Beam editing and missing-mass calculations have been added and modifications have been made to decrease the number of rejects due to beam track failures.

Several experiment-dependent routines have been added to ARROW.[7] A new logical select was written which allows the physicists easier access to the data.

CHAOS[8] has been extensively rewritten in order to allow full CRT capabilities and still give the user access to the 6600 express mode. The CRT routines allow the user to plot histograms, scatter plots, and several different types of boundaries.

The bookkeeping program MLIST[9] has been used on two small experiments for debugging purposes and is now going into production on a large experiment.

A preliminary PHONY writeup is now available.[10] Several changes were made as new users encountered various problems. Work is now starting on a major change which will decrease the running time considerably for most applications.

Two new routines, CHRISTO and CCGRAPH,[11] were written to plot histograms and data points with curves for publication purposes.

Various phase-shift analysis programs were modified for use on K^+-deuterium differential cross sections at different incident energies. A program HULTHEN was written to perform various operations on total cross section measurements of π, K, p, or $\bar{p}$ on hydrogen and deuterium, such as folding in the effect of the Fermi motion on the deuteron. Various programming jobs were done in connection with the research for a report entitled, "A Search for K^* Below $K\pi$ Threshold."[12]

---

5. A. D. Johnson, Preliminary Trilling-Goldhaber Memo No. P-118 (not for distribution outside Laboratory).
6. PDSR, UCRL-17282, Nov. 1967, p. 27.
7. E. A. Romascan, R. W. Casey, T. R. Tonisson, and O. I. Dahl, 6600 ARROW System, Alvarez Programming Note P-147.
8. PDSR, UCRL-11132, Nov. 1963, p. 51 (or see Derik Armstrong, Mathematics and Computing).
9. PDSR, UCRL-17282, Jan 1967, p. 28.
10. Jim Miller, EPC Reject Number for PANAL, PANG, and PACKAGE Rejects, TG-143, Feb. 28, 1966 (available from the Trilling-Goldhaber Office).
11. Bronwyn Hall, CHRISTO, TG-158, Nov. 14, 1967 and Bronwyn Hall, CCGRAPH, TG-161, April 10, 1968 (available in the Trilling-Goldhaber Office).
12. R. W. Bland, G. Goldhaber, B. H. Hall, and G. H. Trilling, A Search for K^* Below $K\pi$ Threshold, UCRL-18206 Rev., May 1968 (to be submitted to Phys. Rev. Letters).

For Moyer-Helmholz Group

Ruth Hinkins

Programming for the SLAC spark chamber experiment is nearly complete. The track-finding routines, written at Berkeley and adapted for use on Stanford's IBM 360 System, have been continually modified on the basis of many test runs. Additional programs were written to determine chamber alignment and to investigate incorporation of hodoscope and magnet chamber information into the main program. The most recent programming effort was an attempt to decrease running time, necessitated by an unusual amount of spurious data. The new method involves considerable bit manipulation; care was taken to stay compatible with the 32-bit words of the IBM 360. The result was a fivefold time decrease.

Preparatory programming for the $\pi^- {}^3$He cyclotron experiments currently consists of polynomial approximation for a momentum estimate and iterative orbiting for final momentum.

For Lofgren Physics Group

Bobby M. Powell, Joan P. Tyson, Les Wilson, and Donald H. Zurlinden

Work has continued on preparing the necessary programs for scanning the output from Bevatron Experiment #67, the K_{E_2} Branching Experiment. Programming is complete for defining the circular and side chambers in the SASS System and for scanning negatives from the circular chamber. Yet to be completed are the programs for scanning films of the side chambers, and the main control program.

The fiducial fitting and reconstruction portions of a program to process spark chamber K_{E_2} experiment data have been written and debugged. A version of this program which obtains data from SCAMP tapes has been written and is being debugged. The orbit parameter approximating routine is written; debugging will be completed when the SCAMP input section is working. A setup program which prepares spark chamber input data for the fiducial fitting sections of these programs was completed and running prior to the debugging stages of the reconstruction programs.

PDP5/8 - 6600 Data Link

A project to develop software for a disk-oriented system for the PDP-5 has been started. The system is designed to handle descriptive information about an experimental run, collect data from the spark chamber, perform a χ^2 test for counting ratios, display events, communicate with the 6600 via the data link and DECODE information obtained from the 6600 analysis program. The following programs were written for a nucleon-nucleon triple scattering experiment.

PNTFLD

The Magnet Test Group measured the vertical component of the field in the 16×36 Bevatron C magnet at five different levels for each of four different currents. The program arranges the data into a rectangular grid for each of the four currents, adjusting for the different base points and other peculiarities of the different blocks as necessary.

ARKTST

The program makes a crude test of the accuracy of the Adams and Runge-Kutta integration method. Under conditions similar to those expected in the experiment, the particle repeated

a circle over a hundred times with no observable error in hundredths of an inch.

SOLNOD

The theoretical field in the superconducting solenoid ZORBA was calculated by using CTRIM and assuming an iron core. This program then orbited particles through the field and calculated various integrals, which indicated the field solution was unsatisfactory. A second calculation for the field was then obtained, using COILS and assuming no core. The line integrals were recalculated and appeared to be satisfactory.

URGENT

The program rearranges the field values obtained from COILS to make them directly comparable with values obtained from an actual measuring device.

PSORBT

The main data-reduction program will calculate the momentum of a particle from its position and direction on entrance and exit from the C magnet. For this purpose certain parameters must be calculated by a least-squares fit to the class of orbits expected to pass completely through the system. This program is a Monte Carlo program to generate such orbits.

PSGLOP

The four readings from the wands of each of the twelve wire chambers are put onto magnetic tape or passed over the data link by a PDP-5. This program uses information about the location and orientation of the chambers to calculate the positions of the sparks in an overall coordinate system. In conjunction with PSORBT, it will constitute the major part of the main data-reduction program.

B. NUCLEAR CHEMISTRY

Noel Brown, Penelope A. Collom, Gerry Litton, and Claudette E. Rugge

Heavy-Ion Studies

Several modifications were made to BRAGG, a program that calculates the characteristics of the transport through matter of high-energy heavy ions. These included increased user flexibility in specifying input and output. A final version was written and a report describing the program was issued.[13]

A method was developed for including the effects, due to secondary-particle production, on the transport properties of heavy ions in matter. This was done in such a way that program BRAGG could be used to calculate these effects. The appropriate modifications to BRAGG were made and the resultant program, BRSEC, is currently being used to calculate secondary-particle effects.

Another version of the above-mentioned program was written for use on the CRT and teletypewriter. This program, TVSECS, allows the user to specify input and output parameters at execution time and examine the details of the physics in a rapid, interactive manner.

13. Gerald M. Litton, Program BRAGG: A FORTRAN-IV Program for Calculating Bragg Curves and Flux Distributions, UCRL-17391, Feb. 24, 1967.

Spectral Analysis Programs

1. Program SPECT31 was completed. This is a CRT program which allows on-line analysis of nuclear gamma spectra. The analysis includes automatic or manual background specification, the calibration of a system by use of known spectra, and the subsequent identification of unknown spectra and delimitation and identification of peaks.

2. On the basis of the experience gained by the use of SPECT31 an improved version has been written; the objectives are the minimization of the necessary real-time interaction, and an increase in the flexibility of the user options. This program is at present being debugged.

In the analysis of complex x-ray spectra, program TAILSIG[14] was used on standard peaks for channel calibration with respect to peak shape parameters. These shape paramterers were then input to program AIRLIFT to fit 1024-channel x-ray spectra containing up to 30 main peaks, each of which may have up to three other area-ratio-related peaks. The program plots the input data versus the calculated function and its residual, and it tabulates shape parameters, total area under Gaussian plus exponential tail, and mean values of all main peaks found in the spectra.

A program STRUCK was written and modified to generate structure amplitudes used for the theory and analysis of two-nucleon transfer reactions.

Assistance was given in developing programs for incorporating core excitation effects on transfer reactions.

Programming assistance was also given to extend the treatment of alpha scattering from deformed nuclei to include additional degrees of freedom associated with surface vibrations.

The PDP-7 time-sharing system, MEDUSA, is complete and in its final debug phase. Testing with actual operational programs has been started. Further information is contained in "MEDUSA--Its Use and Operation."[15]

C. ACCELERATOR AND MAGNET DESIGN

Richard Ahlstrand, Victor O. Brady, Bruce R. Burkhart, Elon R. Close, John S. Colonias, Robert N. Healey, Barbara S. Levine, Bobby M. Powell, and Steven J. Sackett

LINDA[16] and TRIM,[17] magnetostatic programs, are being modified to increase their efficiency and are being used in production. Work on the program TAMI,[18] a general-purpose code for the solution of 3D magnetostatic problems with variable μ, is progressing slowly because of major problems encountered in the physics and mathematics of the model. Program POISSON[19] was modified to allow the evaluation of iron magnets in conformally mapped geometries.

---

14. PDSR, UCRL-17876, Nov. 1967, p. 54.
15. Penny Collom, MEDUSA--Its Use and Operation, available in the Computer Center Library.
16. PDSR, UCRL-16863, May 1966, p. 31.
17. J. S. Colonias and J. Dorst, Magnet Design Applications of the Magnetostatic Program Called TRIM, UCRL-16382, Sept. 1965.
18. Steven Sackett, A Computer Code (TAMI) for Magnetic Fields in 3-D Space with Magnetic Materials Present, ENA66-371, Jan. 3, 1967.
19. K. Halbach, Application of Conformal Mapping to Evaluation and Design of Magnets Containing Iron with Nonlinear B(H) Characteristics, UCRL-18173, Feb. 1968.

A magnet for the $\pi\sqrt{2}$ double focusing iron-free spectrometer is being designed.

The possibility of constructing an electrostatic spectrometer based on a novel approach is being investigated and the appropriate computer programs are being prepared.

The optimization of electron-focusing devices such as spectrometers has been investigated by a joint effort with the University of Uppsala, Sweden. The results of this investigation appear in a Swedish publication.[20]

Orbit Studies

Program SYNCH[21] is being reorganized, and on-line graphic routines are being added to increase its usefulness.

Program ORO, which is part of the CYDE[22] program series, has been converted to the CDC 6600. The Linear Programming Code LP-90[24] has been tested with the CYDE series, and a case has been generated to check feasibility of using this package to obtain isochronous field for the 88-inch cyclotron.

The magnetic field quality in the center region of the 88-inch cyclotron have been studied by using program PINWHEEL.[24]

An on-line version of Program TRANSPORT[25] is now 50% complete. The final version will allow data to be input and altered via a teletype, and will provide graphic output of pertinent results.

To facilitate development work relating to the extraction efficiencies of the 184-inch cyclotron, pertinent programs are being written for graphic display and on-line interaction.

Special Projects

Several programs have been written for the Electron Ring Accelerator project (ERA) to investigate space-charge fields, compression fields, and fields from a periodic azimuthal current on the surface of a tube.

D. BIOMEDICAL APPLICATIONS

Esther H. Coleman, Ruth Hinkins, William D. Hogan, Mark W. Horovitz, Gerald M. Litton, Thomas F. Mahan, Marjory C. Simmons, and Kenneth G. Wiley

Data required for a quantitative analysis of pituitary irradiation treatment of diabetics has now been coded and stored on a master data tape for use with programs TIPS[26] and MEDPIC.[27] Analysis of these data has been started. A Boolean filter section was added to

20. Bengt Olsen and Cengiz Besev (Institute of Physics, University of Uppsala), and John S. Colonias, Computer Design and Optimization of Iron-Cored Particle-Focusing Devices, UUIP-586, April 1968.
21. A. A. Garren and J. W. Eusebio, SYNCH--A Computer System for Synchrotron Design and Orbit, UCID-10153, April 10, 1965.
22. Elon Close, CYDE: A Collection of FII Cyclotron Development Codes for Use on the IBM 7094, UCID-2869, Jan. 1967.
23. PDSR, UCRL-17544, May 1967, p. 39.
24. M. Reiser and J. Kopf, Electrolytic Tank Facility and Computer Program for Central Region Studies for the Michigan State University Cyclotron, MSUCP-15.
25. PDSR, UCRL-16511, Nov. 10, 1965, p. 24.
26. Richard D. Yoder et al., Tulane Information Processing System, Version II, Tulane University School of Medicine, 1966.
27. PDSR, UCRL-17876, Nov. 1967, p. 55.

the MEDPIC program to permit more general selection criteria to be applied to the medical records.

A PDP-8 computer with a disk, CRT, and magnetic tape has been programmed for use with a nuclear magnetic resonance spectrometer. Programs that store data on a disk, average, and display data were written and are being tested. Further processing of the data is carried out by CDC 6600 programs which perform Fourier transforms and decomposition of the NMR spectra. PDP-8 programs for processing two-channel counter data that has been input via paper tape have been written and are in routine use.

Radiation dosage calculations were improved and extended. Program KALNAES[28] was completed and the calculations carried out by program DOSMAP[29] were generalized. A program SPRAY was written to compute beam profiles at varying distances from a collimator. Programs BRSEC and TVSECS were written to compute and display the contribution of secondary particles to the energy spectrum of a particle beam at a chosen depth in a target.

IRK,[30] GASP,[31] FINDR,[32] DIFEQS,[33] and other previously coded programs were used to process large amounts of data on the tracer kinetics of iron, calcium, strontium, and carbon in humans. Computed parameters were compared with clinical findings in order to establish the diagnostic value of these programs.

Programs were written to process data from a wire spark chamber used as a medical γ-ray camera. Assistance was given in solving numerous small fitting, statistical, and programming problems.

E. MISCELLANEOUS

Robert A. Belshe, Mansfield L. Clinnick, Esther A. Coleman, Joan P. Tyson, David F. Stevens, Deanna A. Wilber, and Edna E. Williams

A new version of PUZZLE,[34] a program to aid in printed-circuit artwork design, is now available for production use. The new version has the facility for drawing the board outline, bringing all required wires to the appropriate connectors. Some improvements have been made in actual routing logic. The program can readily handle eight- and ten-pin micro-logic, and fourteen- and sixteen-pin dual-in-line packages, as well as discrete components. Work has been begun to incorporate CRT input procedures to allow on-line interaction.

STAP[35] has undergone further modification and debugging. It has also been in constant production status. Auxiliary routines have been written to produce needed reports. CATLOG was written to produce a specially formatted output tape to be used in producing the Stores Catalog. CLEAR was written to provide maintenance to the master tapes necessitated by parity errors. BORD was written to provide listings of various fields on the master file, for both system and program debugging.

---

28. PDSR, UCRL-17876, Nov. 1967, p. 56.
29. PDSR, UCRL-17876, Nov. 1967, p. 55.
30. PDSR, UCRL-16511, Nov. 1965, p. 31.
31. PDSR, UCRL-17544, May 1967, p. 41.
32. Grove C. Nooney, Iron Kinetics and Erythron Development, UCRL-11879, Rev. 1, May 1965.
33. PDSR, UCRL-16511, Nov. 10, 1965, p. 31.
34. Deanna Wilber and Ron Zane, Development of "PUZZLE": A program to Aid in Printed Circuit Layout Design, EE-1215, July 28, 1967.
35. PDSR, UCRL-16863, May 1966, p. 35.

Two of the report generators, POFO[36] and BEALS, have been completed. The subroutines required for tape handling and the BLIMP Operating System[37] have been refined to the point where the inventory people are able to construct their own report generators. A new BLIMP routine was written to replace the old FORTRAN routine to dump the contents of an inventory tape in an easily readable fashion. Both programs spend most of their time formatting the printed output. The BLIMP routine, operating in its crudest mode of outputting a single character at a time, is 2.7 times as fast as the FORTRAN routine. When formatted strings are implemented in BLIMP, this figure should become even larger.

The PDP-8 computer-controlled rapid mapper (Magnet Test Group) has been used for two unusual measurements and is at present being modified for a third. This work is being done for the Bevatron Group. The measurements are of a type never before done by Magnet Test, and require timed sequences of data to be taken during a Bevatron pulse.

A preliminary study of seismic waves in a two-liquid system has produced useful results. Work on this project has been temporarily halted.

Two programs, RAMA and NEWCERT, have been written and other programs modified to analyze the magnetic fields present in accelerator systems. The programs perform the tasks of unpacking and sorting data from magnetic experiments, adjusting these data on the basis of calibration data, and detecting and correcting errors in the data.

The program MAP was written to plot an array of magnetic intensities. The end result is similar to a contour map, but an area of like values is denoted by points plotted at the same intensity, rather than by calculating contour lines. The program will be used to regenerate pictures of magnetic fields in sun spots. The plotting portion of this program is available as a subroutine (TVPICT).

Three programs were written to compute phase-sensitive detector nonlinearities. The first program PHASE computes the nonlinearity N_A as a function of input signal-to-noise ratio and reference wave-to-noise ratio. The second and third programs, ENBEE and ENCEE, compute the nonlinearities N_B and N_C, respectively, relating to the phase angle between the input signal and the reference wave.

The program SELL, originally written to read a data tape and plot and list various pieces of information, is being continually modified to allow for more flexibility on the part of the user.

The subroutine HYPG was written to compute confluent hypergeometric functions $F_1(a, b, x)$.

A field-free input conversion routine, CONVERT, for the CDC 6600 has been written and debugged. A complete description is available from the Mathematics and Computing Library.

36. PDST, UCRL-17544, May 1967, p. 42.
37. PDSR, UCRL-17876, Nov. 1967, p. 59.

F. SYSTEMS PROGRAMMING

Eric R. Beals, William H. Benson, Jerry T. Borges, Douglas N. Brainard, William F. Dempster, Robert L. Fink, Judy E. Glasner, Walter H. Hutchinson, Joyce P. Johnston, Jeremy A. Knight, Samuel J. Penny, David F. Stevens, and Robert E. Tracy

6411

ASOP[38] was modified to provide support for the SCOPE System on the 6600's (as well as the BKY System); this included the ability to simultaneously support SCOPE on one 6600 and BKY on the other. A facility to revert jobs from one 6600 to the other via the 6411 was added. An expanded teletype driver, capable of handling 24 teletypes, has been written; debugging will begin as soon as the hardware becomes available. Two extensions to the remote console facility are in progress: the first will permit the attachment of more than one console to a single job; the second will enable the console utility programs to share the standard system I/O control point ("GENIO") on the 6600's.

Accelerator Link

Hardware debugging has begun and data have been successfully transferred in both directions. Final debugging of the driver will begin as soon as the hardware is solid. A programmers' guide for users of the link has been prepared.[39]

Mass Storage System

The IBM 1360 Photodigital Chip Store has been delivered to the Laboratory and connected to the 6600. It passed the preliminary acceptance test, and preparations for the 30-day performance test are under way. The basic design of the Mass Storage System software has been completed, and implementation has been begun.

6600

A full-scale conversion to the SCOPE Operating System was begun; this involved modifications to SCOPE (to accommodate the 6411 and the other special equipment at the Laboratory), to the design of the Mass Storage System, and to ASOP (to accommodate SCOPE). When comparison runs (in an operating environment) indicated that throughput under SCOPE would be 20 to 25% less than under the BKY systems, the conversion was abandoned. Certain of the user-oriented features of SCOPE will be provided under BKY; these include FORTRAN Extended, the SCOPE Loader, COBOL, Random Access Disk I/O, and the SCOPE UPDATE facilities. The system monitor and operator console routine have been rewritten to provide better (system and operator) response to users' requests. More efficient handling of plot files (both CRT and CalComp) has been provided; the CRT has been made accessible from either 6600.

A fast dot-product routine was developed. In the course of testing, it uncovered a serious timing error in 6600A, which has now been corrected.

Work was begun on a series of routines to provide statistical information on tape drive failures. The first of these, a simple FORTRAN program, is now operating.

---

38. Sam Penny, ASOP: Attached Support Operation System, Math & Computing Memo No. 303, November 1967. This writeup is available in the Computer Operations Library.
39. D. N. Brainard, Programming Guide: 6600–Remote Computer Hookup, Math & Computing Memo No. 304. Available from the Computer Operations Library.

Work was begun on a "Sampler" for FORTRAN Extended.

Other work in progress includes a fast system tape loader, expansion of the console utility program COMUT to include an editing capability (with Jim Burkhard of the Alvarez Programming Group), and a new, fast program loader (developed by Ed Romascan of the Alvarez Programming Group).

The paper "On Overcoming High-Priority Paralysis in Multiprogramming Systems"[40] was accepted for publication by Communications of the ACM; the paper "System Evaluation on the Control Data 6600"[41] was accepted for presentation at IFIP Congress 68.

PDP-7, PDP-9 Assembler

A PDP-7 Assembler has been almost completed using BLIMP and hash-coded symbol tables. The first version is to replace an Assembler written in FORTRAN that used linear search of the symbol table. The FORTRAN version is 50000_8 words long, the new version is 20000_8 words long and promises to be much faster. It is almost debugged. This Assembler will be adapted to other versions such as one compatible with MACRO-9 for the PDP-9 and probably one compatible with PAL-3 for the PDP-8.

II. RESEARCH IN MATHEMATICS AND COMPUTER SCIENCES

William H. Benson, Paul Concus, Harold Hanerfeld, David W. Jenson, Loren P. Meissner, Grove C. Nooney, and Leo S. Vardas

Computer Typography

A keyboard has been designed for use with an IBM-526 punch, which will punch two columns per input character. This will provide for a set of 99 different characters (including the normal Hollerith alphabet as subset), each in 96 "font combinations." This keyboard is one of several possible input devices for a proposed general computer-controlled typographic system. The nonstandard characters and the selection of font combinations will remain flexible, and can be changed for various applications.

Interactive Time-Sharing System

Design specifications for an inexpensive small-scale general-purpose interactive time-sharing system were formulated, and implementation was begun. Hardware delivered in FY 68 includes a PDP-8I Computer with hardware multiply-divide and 8K memory, a 500 K-word disk, and one console (teletype and 5-in. storage scope). In FY 1969, another PDP-8I, disk, and four consoles will be added; one of the design criteria is sufficient modularity to facilitate the addition of this, and possibly other, hardware. Somewhat analogously, the basic structure of the software is sufficiently modular to provide simultaneous (time-shared) support of several different applications. At present, only one application, a modified Culler-Fried System, has advanced beyond the design state (it is currently being debugged).

The hardware has been selected with extreme reliability in mind. An attempt has been made to provide software which is equally reliable by providing individual users with a powerful

40. David F. Stevens, On Overcoming High-Priority Paralysis in Multiprogramming Systems: A Case History, UCRL-17838 Rev., Jan. 1968.
41. David F. Stevens, System Evaluation on the Control Data 6600, UCRL-17893, Oct. 1967.

common language (which is interpreted by the system), instead of direct access to the computer.

Heat Transfer Through a Thin Rotating Nuclear Target

Work was completed on a paper[42] wherein the approximate periodic steady-state temperature of a rotating nuclear target system is found numerically by using a truncated eigenfunction series technique. The solution obtained is useful in the design of such targets.

Nonlinear Block-Successive Overrelaxation

The formulation of a nonlinear block-successive overrelaxation method to numerically solve a two-dimensional elliptic quasi-linear partial differential equation was completed. The method was tested on the minimal surface equation and was found to behave qualitatively the same as a previously investigated point method, but it resulted in more rapid convergence to the solution. A report describing the work is in preparation.

Surfaces with Linearly Varying Mean Curvature

Investigation was continued of the solution of the partial differential equation describing a surface with linearly varying mean curvature in a two-dimensional domain subject to a boundary condition of the second kind. For the circular domain, both asymptotic and numerical solutions were obtained, as were conditions for stability. A paper entitled "Static Menisci in a Vertical Right Circular Cylinder"[43] was prepared describing the results. Work is continuing on the study of nonlinear domains.

Bounds for Roots of Polynomials

Work is nearing completion on a report to be entitled "Bounds for the Roots of Certain Polynomials and Matrices." The report deals primarily with polynomials and matrices whose roots are all positive. The methods developed are particularly useful when we are looking for specific roots. In that case, we can isolate an interval on the real line in which the desired root will be found.

In the sections concerning polynomials, we obtain three sets of bounds for each of the roots. The first set of bounds depends only on the polynomial coefficients, the order of the polynomial, and the ordinal number of the roots when ranged in decreasing magnitude. The other two sets of bounds give more accurate results, but are not so easily evaluated, as they involve taking a square root. A lower bound is also obtained for the root of least magnitude of an arbitrary polynomial with real roots.

The section dealing with matrices applies the results for polynomials to positive definite matrices. A technique is described for finding the coefficients of the characteristic polynomial of a matrix when in tridiagonal form. The coefficients are found from a slight alteration in the iterative process used for finding the roots when in tridiagonal form. Two other lower bounds for the least root of a positive definite matrix are also given.

---

42. Paul Concus, Heat Transfer Through a Thin Rotating Nuclear Target, UCRL-17924, Jan. 1968.
43. Paul Concus, Static Menisci in a Vertical Right Circular Cylinder, UCRL-18112, Feb. 1968.

Etiology of Leukemia

Plausible assumptions about the stochastic control of proliferation and differentiation of hemopoietic stem cells and about the effects on differentiating cells of successive early divisions by their precursors point to depletion of the stem-cell population as a primary cause of human leukemia. Models have been run on computers. A hypothetical disease predicted by these assumptions closely resembles granulocytic leukemia in its appearance and course. The ordinary treatment for leukemia palliates the hypothetical disease and ensures its later aggravation.

Human Ferrokinetics

The rate of iron acquisition by erythrons and the rate of their hemolysis have been calculated[44] as a function of erythron age for several normal subjects. This yields a standard for comparison with the corresponding functions in patients. A few such comparisons have been made.

A Hematology Seminar at the Stanford School of Medicine heard a lecture on the clinical use of an analytical method[45] in ferrokinetic studies. The lecture reported results for two patients.

A renewal equation allows the determination from ferrokinetic data of the degree of intramedullary hemolysis of circulating reticulocytes. Such hemolysis is significant in many hemolytic disorders. In one splenectomized patient with spherocytosis, two-thirds of all circulating reticulocytes was so destroyed.

High-Order Resonance for Duffing's Differential Equation

A theorem on Duffing's Equation was proved and was included in a paper[46] submitted for publication to the Society for Industrial and Applied Mathematics. The differential equation

$$\gamma \cdot y''(\theta) + y(\theta) + g(y(\theta)) = f(\theta)$$

for certain small values of γ exhibits "resonance," a phenomenon characterized by the nonexistence of solutions "near" the solution of the reduced equation, $\gamma = 0$. This paper demonstrates that it is possible, by avoiding these resonant values of γ, to choose a sequence $\gamma_n \to 0$ such that the corresponding solutions approach as a limit the solution of the reduced equation. The particular case $g(y) = \beta \cdot y^3$, $f(\theta) = \cos\theta$ is studied numerically, and it is found that for $\beta \leq 0.4$ the theorem applies.

Miscellaneous

A program was written in Chippewa BLIMP, ASCENTF, and FORTRAN to translate ASCENTF-FORTRAN subroutines into the corresponding languages of the SCOPE Operating System. The translator, TRANSAFC, could, in fact, translate itself so that it could be available in either system.

---

44. Grove Nooney, Iron Kinetics and Erythron Development, Biophysic. J. 5, 601 (1965).
45. Grove Nooney, An Erythron-Dependent Model of Iron Kinetics, Biophysic. J. 6, 601 (1966).
46. Loren P. Meissner, High-Order Resonance for Duffing's Differential Equation, UCRL-18077, Feb. 1968.

A general-purpose macro-preprocessor is being developed (in Chippewa BLIMP-ASCENTF-FORTRAN) to provide macro facilities and compile-time-execution statements for languages other than the traditional assembly languages. Such a processor will enable programmers to write general-purpose programs with parameters that are processed at compilation time, rather than at execution time, thus providing more efficient subroutines which are tailored for each application. The feature provides considerable flexibility in developing the various macros for a problem-oriented language.

With the above processor in mind, techniques are being developed for solving the general spark chamber momentum-analysis problem. It is hoped that in the future a majority of the coding required for any spark chamber experiment will be automated.

III. COMPUTER OPERATIONS

Paul A. Rhodes and F. Marvin Atchley

Plans were completed and the IBM Photoscopic Chip Storage Device was installed on March 1, 1968. IBM and Laboratory personnel started debug runs on March 13, 1968. This system is expected to undergo full acceptance tests and a 30-day running period soon.

In April, the teletype interface was modified to allow twelve additional teletype stations to be added to the CDC 6411. Through the ASOP System this will allow the driving of twelve more teletypes for direct user-program communications.

In February, an inactive-tape library service was initiated for the purpose of archival storage of magnetic data tapes. This library now contains approximately 3800 tapes.

A new computer user service of full-time magnetic tape error diagnosis was initiated in January.

PUBLICATIONS AND PAPERS

1. Paul Concus and G. E. Crane, Free and Forced Oscillations of a Liquid in an Axisymmetric Tank at Low-Gravity Environments, J. Appl. Mech. 34, 1051 (1967).
2. Paul Concus and D. R. Olander, Transient Diffusion in a Composite Slab, Intern. J. Heat Mass Transfer 11, 610 (1968).
3. Paul Concus, Heat Transfer Through a Thin Rotating Nuclear Target, UCRL-17924, Jan. 1968.
4. Paul Concus, Static Menisci in a Vertical Right Circular Cylinder, UCRL-18112, Feb. 1968.
5. William D. Hogan, Bibliographical Note on Controlled Clinical Trials, UCRL-17698, June 15, 1967.
6. William D. Hogan, On Clinical Trials, UCRL-17582 Rev., May 24, 1967.
7. Gerald M. Litton, Program BRAGG: A FORTRAN-IV Program for Calculating Bragg Curves, Flux and Current Distributions, and Energy Spectra, UCRL-17391 Rev., Feb. 1968.
8. Loren P. Meissner, High-Order Resonance for Duffing's Equation, UCRL-18077, Feb. 7, 1968.
9. Bengt Olsen and Cengiz Besev (Institute of Physics, University of Uppsala, Sweden) and John Colonias, Computer Design and Optimization of Iron-Cored Particle-Focusing Devices, UUIP-586, April 1968.

10. David F. Stevens, On Overcoming High-Priority Paralysis in Multiprogramming Systems: A Case History (UCRL-17838 Rev., Jan. 1968), submitted to Commun. ACM.
11. David F. Stevens, System Evaluation on the Control Data 6600, UCRL-17893, Oct. 1967.
12. Donald Zurlinden, Computer-Controlled Data Reduction of Spark Chamber Film, UCRL-17695, July 27, 1967.

DATA HANDLING

Howard S. White in charge

COMPUTER PROGRAM DEVELOPMENT

HAZE: Semiautomatic Event Measurement

Shirley Buckman, Joyce Crawford, Priscilla Davis, Wen Sue Gee, James Greene, Carol Osborne, and Loren Shalz

The real-time HAZE program (420) continued in routine production operation. New experiments in the remodeled 25-inch hydrogen chamber were set up and a beam momentum determination was made within 5 hours of receipt of the film. On 27 March 1968 the millionth event was processed by HAZE.

The HAZE merge program (432) was modified to write records having a maximum of 512 words so that HAZE library tapes can be input directly to the less flexible 6600 system. The vertex point calculation used in DAPR was added to program 432. This provides a more reliable event-matching ability for event accounting, as well as a more accurate vertex point for geometry and kinematics.

The FSD hardware monitoring program (431) was modified to provide histograms of the interpolation oscillator output, making electronic maintenance much easier. Sense-line status and average scan-line separation were included in the monitored functions. The FSD calibration program (434) was put into routine production status.

FOG: Geometry and Space Reconstruction

Shirley Buckman, Joan Franz, and Frank Windorski

The FOG three-view geometry program (140) continued in routine production status. Constants for the remodeled 25-inch hydrogen chamber were debugged and updated. Program changes associated with the new tape formats for microscope data were started. These changes were requested by the Powell-Birge group in connection with the COBWEB system.

The microscope-to-HAZE format conversion program (137) was modified to automatically select the appropriate fiducial set so that COBWEB input and old microscope data are handled in an operationally identical manner. This change greatly reduces the number of operator errors.

CLOUDY: Kinematical Analysis

Vivian Morgan

Routine production of the CLOUDY programs continued. A reassembly of the main kinematics program (209) was debugged, and work was started on some new methods for ensuring convergence.

Constants for the new 25-inch chamber experiments were debugged and updated.

FAIR: Data Display

Donna Chrisler and Loren Shalz

The FAIR System of programs continued in routine production status. New flow charts for the revised event-selection program (304) were nearly completed. The new version of the program will provide an expanded CLOUDY abstraction list, a more convenient means for detecting unambiguous events, a more efficient use of core storage utilizing variable-length buffers and storage overlap, and a disk sort of small-list jobs so that short listings are not interleaved with larger listings.

The current version of program 304 was modified to allow restarts in any real of input or output, providing a significant saving of computer time on long runs.

Of the two procedures under development for utilizing ionization information from the FSD, one was selected for production use, and works well.

The FAIR-FOG special event-abstraction program (147) was modified to correct the dip and azimuth angle for beam tracks. This procedure eliminated a large amount of recomputation time, which would otherwise have been necessary due to a deck setup error and an error in program 140.

TRIST: System Monitor

Priscilla Davis and Carol Osborne

Debugging of B-level logic was completed so that DAPR programs can be run as A and B levels. The A, B, TRIST communication link and A-level inhibit logic were reorganized and debugged.

Parts of the TRIST system were recoded to provide more memory space so that new features can be added. Work was started on a general system diagnostic, and a study of the trapping and trap-enabling features was made that allowed several improvements in this area.

Event Accounting

Shirley Buckman, Priscilla Davis, and Carol Osborne

The differences between vertices calculated from scan table data, and vertices calculated from FSD data were studied. This study sampled all chambers and all scan tables. The data provided a means of improving the vertex calculation at the scanning level so that more than 90% of the vertices agreed to within 0.50 cm in space when calculated from the two sources.

Although the event-accounting programs were considered in production status, it was felt that more work was necessary to ensure that the event-accounting libraries always reflect the current status of each experiment.

The ability to perform detailed individual scanner studies was also added to the event-accounting programs.

DAPR: Fully Automatic Event Scanning and Measurement

Barbara Britton, Joyce Crawford, Joan Franz, Wen Sue Gee, Dennis Hall, Nan Jontulovic, Howard White, and Frank Windorski

The real-time track-segment-finding program (511) was reassembled to provide buffer space for more tracks. This was made necessary by the rather poor film quality of the 72-inch

chamber, which contains a large amount of fixed, tracklike noise.

Operation of program 511 in real time with B level was debugged, and some improvements were made to the on-line quality monitor (OQM).

The track joining and linking program (512) was extensively modified and greatly improved during the past 6 months. The most significant improvement was the addition of a track certification procedure. This procedure makes possible the identification of isolated "bad" data points on track segments from program 511. (Such points may occur in the presence of noise, or when two tracks cross at a small angle.) Following identification of such points, it is often possible to perform legitimate joining or linking operations which previously could not have been effected. The certification procedure also provides a final test which must be passed by the union of the two candidate point sets.

Program 512 was debugged as a B-level program with multiple batch input, and has since been operating routinely, with only occasional changes being made as required by the continuing progress of the system as a whole.

A reassembly of program 512 was begun, with particular attention to optimizing the running time. Additional improvements added to the reassembly ensure an even distribution of points over the entire length of the composite segments from joining and linking.

The vertex-finding, vertex-matching, and track matching program (513) was reassembled twice and many new features were added. Further refinement of the weighting function for extrapolation beyond the ends of tracks was found to be necessary, as well as decoupling the vertex point from track matching.

Debugging of B-level operation was completed, and work on the problem of vertex redundancy (finding the same event or parts of the same event more than once) was started.

Debugging of the off-line quality monitor (514) continued, and the ability to run from tape, as well as from the disk as B level, was added.

The scanning program (516) was debugged, and several new features were added. The most important was the removal of spurious beam tracks that pass through the vertex.

A program to merge the Data Abstract (DAT) tapes (517) was flow-charted and nearly debugged. This program also provides summary and catalog information for DAPR production runs.

A diagnostic program (518) was flow-charted and nearly debugged. This program is used for making special CalComp displays of events on the DAT tape, under various selection criteria. Program 518 can also be used to study HAZE output.

Although some debugging still remained to be done, the DAPR system was ready to begin its practice experiment.

DATA-PROCESSING OPERATIONS

The following table summarizes the processing of events measured on Franckenstein and FSD. An event is the entire collection of related vertices measured in a bubble chamber picture. New measurements are counted separately, but the effect of any reprocessing has been eliminated from the totals.

Event measurements analyzed

Experiment	Chamber and laboratory, if other than LRL	Beam	Group	Number of events
28	30-inch propane	Stopping K^+	Powell-Birge	5 177
32	25-inch hydrogen	0.8-1.2-GeV/c K^-	Powell-Birge	3 843
34	25-inch deuterium	0.9-1.2-GeV/c K^-	Powell-Birge	3 508
35	100-cm propane-freon (CERN)	Stopping K^+	Powell-Birge	108
36	72-inch hydrogen	3.3-GeV/c π^+p	Powell-Birge	1 488
37	72-inch hydrogen	3.7-GeV/c π^+p	Powell-Birge	15
38	72-inch hydrogen	3.5-GeV/c π^+p	Powell-Birge	79
39	72-inch hydrogen	2.9-GeV/c π^+p	Powell-Birge	9
40	72-inch hydrogen	3.9-GeV/c π^+p	Powell-Birge	21
42	72-inch hydrogen	1.5-GeV/c π^+p	Powell-Birge	484
43	72-inch hydrogen	1.4-GeV/c π^+p	Powell-Birge	359
44	72-inch hydrogen	1.3-GeV/c π^+p	Powell-Birge	315
				15 406
FSD Measurements				
36	72-inch hydrogen	3.3-GeV/c π^+	Powell-Birge	15 599
37	72-inch hydrogen	3.7-GeV/c π^+	Powell-Birge	22 565
38	72-inch hydrogen	3.5-GeV/c π^+	Powell-Birge	4 994
39	72-inch hydrogen	2.9-GeV/c π^+	Powell-Birge	1 629
40	72-inch hydrogen	3.9-GeV/c π^+	Powell-Birge	18 128
42	72-inch hydrogen	1.5-GeV/c π^+	Powell-Birge	33 266
43	72-inch hydrogen	1.4-GeV/c π^+	Powell-Birge	6 469
44	72-inch hydrogen	1.3-GeV/c π^+	Powell-Birge	61 746
45	25-inch hydrogen	1.0-GeV/c π^+	Powell-Birge	8 788
46	25-inch hydrogen	1.0-GeV/c π^+	Powell-Birge	859
48	25-inch hydrogen	1.0-GeV/c π^+	Powell-Birge	187
71	72-inch deuterium	5.9-GeV/c p	Segrè-Chamberlain	24 517
90	80-inch hydrogen (BNL)	9.0-GeV/c K^+	Trilling-Goldhaber	30 237
91	72-inch hydrogen	3.5-GeV/c π^+	Trilling-Goldhaber	97 600
				326 584
			Total events analyzed	341 990

Accelerator Operation and Development

ACCELERATOR STUDY GROUP

Edward J. Lofgren in charge

STUDY GROUP ACTIVITIES

The LRL 200-GeV Design Study Group continues to play an active part in providing design and development support to the NAL project at Weston, Illinois.

The activities at LRL describe the LRL-NAL joint program.

Synchrotron Magnet Design

The LRL two-dimensional computer program LINDA has been used extensively to provide magnet design data for both the main synchrotron and booster ring magnets. Concurrently, coding has been revised to remove some minor bugs and to provide a more automatic operation of the program. This latter work is a portion of an effort to export this program to the N. Y. U. CDC-6600 and the Argonne IBM-360 and thus provide NAL with their own magnet-design computer programs. This transfer has been 80% effected.

Booster Synchrotron

Several problems have been studied and solutions found. Two types of vacuum chambers have been studied, one consisting of a thin metal foil section with a thick spray-coating of alumina and the other a convoluted metal bellows design. At present both represent practical solutions; however, the metal bellows-type appears more economical.

The kicker-magnet system proposed for extraction from the booster and injection into the main ring has evolved from a 30-element system to a simple 6-element vertical-deflection scheme.

Hydrogen thyratrons will be utilized to fire the pulse lines to power the kicker magnets. Normally the use of thyratrons would limit the pulse rise time to approximately 50 nsec with low jitter. We have devised methods to improve the rise time to about 10 nsec with reliability. Present studies seek to determine the effect on tube life.

Radio-frequency Systems

This group has been functioning at LRL under the leadership of Quentin Kerns, who has joined the NAL staff. During this reporting period, the group has made much progress toward assembling the data and defining sets of parameters that will specify the radio-frequency acceleration system for the Weston accelerator.

The B-H loop tester for measuring ferrite characteristics provides ferrite data in a semiautomated fashion, and has been utilized to select ferrite for current transformer design.

The model cavity studies have led to the determination of a drift-tube slope for the booster-accelerator cavity. The LINE 2B program treats the rf system as a connected system of many short constant-impedance TEM-mode lines, and computes resonances and power loss for a distributed system. With the aid of model measurements, this program can now be used with reasonable accuracy to predict the mode spectrum of real cavities.

Work moved forward rapidly to amass a library of tube characteristics for use with a computerized design program for rf systems. This will enable maximum reliability to be designed into the system at minimal cost. At present, the rf group now has nearly all necessary rf system design information to keep pace with requirements introduced by the setting of other machine parameters.

Beginning in July 1968 an orderly transfer of these activities to Weston, Illinois, is planned.

Superconductivity

A large NbTi superconducting end-corrected solenoid, in its horizontal warm-bore cryostat, has been delivered to the physics group that will use it at the 184-inch cyclotron. The solenoid has a warm bore of 4-1/4-in. diam, is 36-1/2-in. long, and has achieved an axial magnetic field of 55 kG; the energy stored in the magnetic field exceeds 200 kJ. The horizontal warm bore, size, magnetic field, and stored energy are representative of transport magnets required for the 200-GeV experimental area. The solenoid magnet and the assembled magnet-cryostat are shown in Figs. 1 and 2.

Transport magnets of both the bending and focusing types (dipoles and quadrupoles) have been designed using multicore superconductors in a 0.080-in. -square copper conductor. A mechanical model of a dipole magnet using square copper conductor is nearing completion. An 8-in. -diam 12-in.-long solenoid has been wound from the square superconductor to test for possible degradation effects when used in a magnet. Degradation effects were observed, and these material tests are being accelerated.

Systems studies on cryogenics plumbing and refrigerators for the 200-GeV experimental areas have been carried out jointly with "500 Inc.," a subsidiary of A. D. Little, Inc.

Losses of superconducting magnets in time-varying fields have been measured electrically with a Hall-effect multiplier system. These losses underlie the design of efficient high-current density magnets from a cooling and stabilization standpoint.

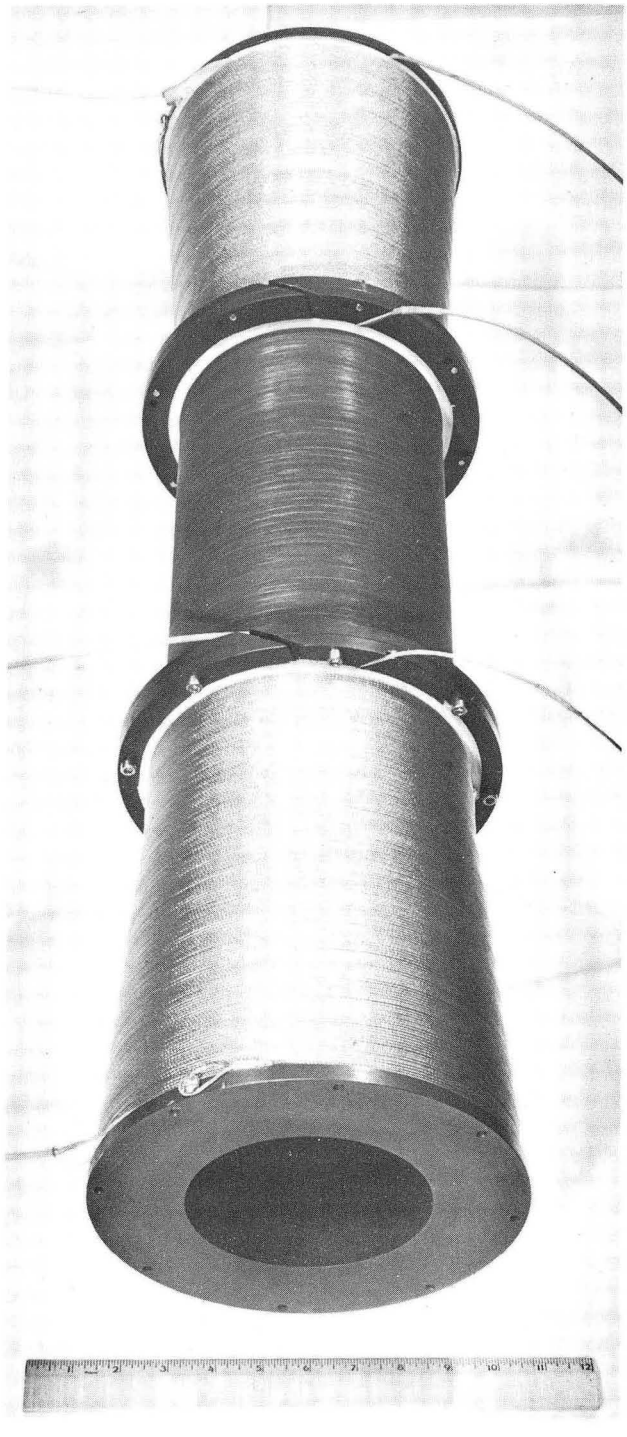

Fig. 1. Superconducting NbTi end-corrected solenoid. CBB 682-611

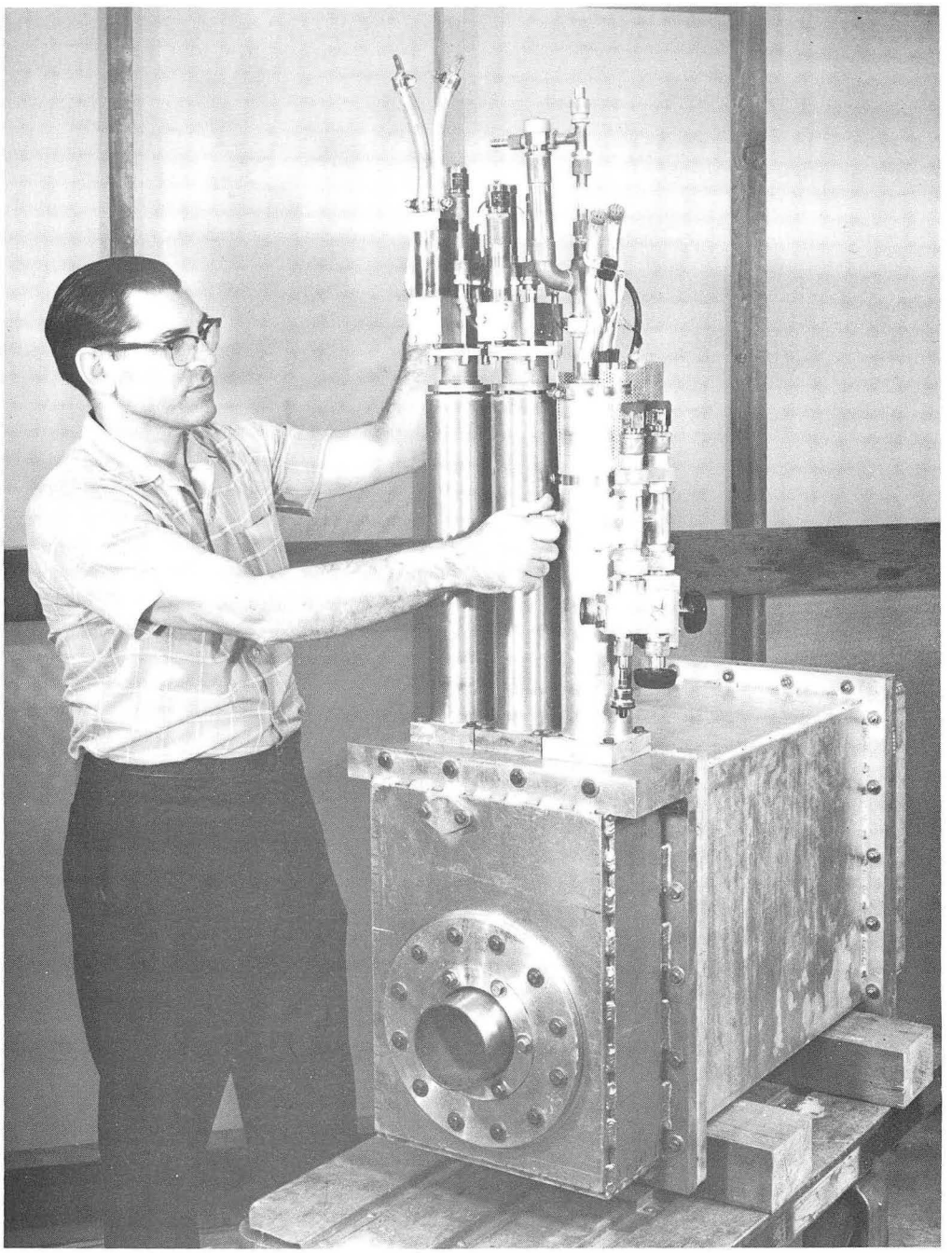

Fig. 2. Horizontal, warm-bore cryostat containing the superconducting solenoid. CBB 684-2004

Electron Ring Accelerator Group

In the period covered by this report the study of the Electron Ring Accelerator (ERA) has grown virtually from birth to a full-fledged program.

The general concept of, and the first experimental results on, electron-ring accelerators were revealed by the Dubna group at the Cambridge Accelerator Conference in September 1967. This specific form of an accelerator depending on "Collective Effects" is believed to be due to the late Vladimir I. Veksler. Following the Cambridge Conference, Andrew Sessler began intensive studies of possible parameters for an ERA, and in October further stimulation was provided when Denis Keefe visited the Dubna accelerator laboratory and saw the hardware assembled there.

The basic principle of such a device is to form a very intense ring of electrons within which protons or heavy ions can be trapped by the strong collective electrostatic fields and then to accelerate the ring which acts as a vehicle for carrying along the trapped ions. Typically, the electron ring should have a major radius of a few centimeters and a minor radius of a millimeter and would contain some 10^{13} electrons. The electron energy would be typically 20 MeV. The number of trapped protons should be about 10^{11}. There are two basic methods of achieving axial acceleration of the ring–the so-called Magnetic (or Expansion) Method and the Electric Method. In the former case the ring is allowed to travel down a solenoid with a slowly decreasing axial magnetic field. In the process the rotational energy of the electrons is decreased and reappears in the form of increased axial energy. In a clear-bore solenoid the ring will expand in size and ion energies up to about 1 GeV/nucleon should be achievable. Recent work by Furth and Rosenbluth indicates that the addition of return flux by means of another solenoid inside the ring would allow substantially higher ion energies to be obtained without, indeed, any expansion of the ring diameter.

Two forms of electric field acceleration have been considered in the LRL studies. One involves rf cavities, the other the so-called pulse-line system. Each system has certain advantages and disadvantages, but it is clear that one or the other or even a combination of both will be necessary for the achievement of very high proton energies ($\gtrsim$ 30 GeV).

Preliminary considerations of an ordered sequence of experiments to establish the feasibility of an Electron Ring Accelerator were begun in the close of 1967 and continued through January 1968. Very attractive applications for nuclear chemistry, biomedicine, and high-energy physics were quickly perceived as possible. A large Symposium on Electron Ring Accelerators was organized and held at LRL—Berkeley during February 5 through 7, 1968, and was preceded by a working conference on related theoretical topics. The attendees were accelerator and plasma experts from major high-energy laboratories in the U.S. and Europe. The conclusion of the Symposium was that the ERA concept looked very attractive, both conceptually and from an engineering point of view, and that the ideas involved should be pursued vigorously, both experimentally and theoretically.

The hardware program at this stage was originated in several phases, some towards the longer-range goals such as development of possible rf and pulse-line acceleration schemes.

Jack Peterson headed the compressor design work, with Bill Salsig and Paul Hernandez in charge of mechanical engineering, and Bill Baker, Ed Hartwig, and Ferd Voelker helping

with various aspects of the electrical problems. In addition, studies of rf acceleration were begun by Voelker and studies of pulse line schemes by Hartwig.

Top priority was given to the so-called "compressor" programs. The compressor is a relatively small device (if one discounts the ancillary equipment) in which the electrons are trapped and formed into a ring into which protons or heavy ions are injected. Full compression of a ring to 4 cm major radius and 20 MeV energy needs the activation of a set of three nested coils. The first of the sequence of planned experiments will be with "Compressor 1" built by Bill Baker's Group. This will have only two coil sets, giving a final electron energy of 10 MeV, and will be operated in May 1968 at the 150-mA electron linac at Berkeley. Its main purpose will be to guide us in devising suitable multiturn injection techniques, developing diagnostic equipment, and studying single-particle-dynamical effects, aimed towards better instrumentation on "Compressor 2." The latter will be installed at Livermore during July 1968, and is scheduled to run in the 400-A Astron-injector beam in August 1968.

As of this time the longer-range programs have been reduced to skeleton dimension in the effort to keep the schedules set for Compressor 1 at the Berkeley Linac and Compressor 2 at the Livermore Astron Injector. The next in the sequence of experiments with the high-current Livermore injector will be in September. If the experiment in August is successful in forming rings of appropriate dimensions and high current, the next step is to install an extraction system to extract the ring and accelerate it to an equivalent ion energy of several tens of MeV per nucleon.

PUBLICATIONS AND PAPERS

1. R. B. Meuser, W. F. Chamberlain, and R. E. Hintz, Solenoid Having a Horizontal Axis and a Room-Temperature Aperture, UCRL-18179, April 1968.
2. W. S. Gilbert, R. E. Hintz, and F. Voelker, ac Loss Measurements in Superconducting Magnets, UCRL-18176, April 1968.
3. R. E. Hintz, Performance of Superconducting NbTi and NbZr Inorganic Solenoids, UCRL-17772, August 1967. (This report was not included in the preceding Semiannual Report.)
4. Symposium on Electron Ring Accelerators, UCRL-18103, February 1968; contains the papers resulting from the symposium held February 5 through 7, 1968.

BEVATRON

Edward J. Lofgren in charge

OPERATIONS

During the period covered by this report, we provided beam for nine primary experiments and four secondary experiments. Eight of the primary experiments were set up in independent beam channels and were run on the same magnet pulse. Three of these secondary beam channels were from internal targets in the Bevatron, and the other five were in the external-proton-beam facility. Seven of the experiments simultaneously shared a long beam spill, and the eighth took two short beam spills (the first spill just ahead of the long spill and the second just after the end of the long spill). When this many experiments were run simultaneously, usually only three or four experiments were collecting primary data. The remaining experiments were usually in a beam-channel tune-up or counter-testing mode, so their beam requirements were less critical than when they were in a data-taking mode. Primary beam control for data taking is alternated between experiments on a day-to-day or week-to-week basis as needed.

One of the primary experiments was completed during this period. This was the Moyer-Helmholz group's experiment No. 47A. This experiment was a study of K_2^0 decay modes which violate CP invariance. It was done with spark chambers, counters, and a liquid-hydrogen target. The beam was a 1-GeV/c π^- beam from an internal target near the north straight section of the Bevatron.

Work continued on the two-channel external proton beam (EPB) facility. The roof was installed on the last two bays of the new EPB hall, the remainder of the heavy-duty concrete floor was poured, and the curved bridge crane was completed and accepted.

Setup work for the new EPB experiments continued through this period. The 25-inch hydrogen bubble chamber was set up in a new secondary beam channel from a target at the second focus in Channel II of the external-proton-beam facility. Tune-up work started in March 1968, and picture taking started in April.

Two experiments were installed at the third focus of Channel I, and preliminary tune-up and equipment checking was begun. The first experiment is the University of California—San Diego (Piccioni) group's study of the K^0 regeneration amplitude by interference methods. Counters and spark chambers are used. The beam is a 1- to 1.5-GeV/c separated $K^{\pm}$ beam from the third focus target of EPB Channel I. The second experiment at the third focus is the University of California — San Diego (Masek) group's study of the K_2^0 (e_3) charge asymmetry. Spark chambers and counters are used. The experiment utilizes a neutral particle beam from a target at the third focus of the EPB Channel I.

On March 15, 1968, the RCA A2332S vacuum tube driving the accelerating electrode, in the Bevatron, developed a grid-to-filament short. This tube was replaced with the last RCA A2332S in existence. RCA had produced four of these tubes, one of which was destroyed at the factory, the remaining three having been delivered to LRL. The first of the three tubes that

were delivered to LRL was used as the final amplifier for the Bevatron rf system for eleven years. The second (the one that failed this month) was operated for three years. The third and final tube is now in use. Design effort is now proceeding toward the eventual replacement of this tube with a system using an Eimac 4 CW 100 000 D as the final amplifier tube.

There was a scheduled Bevatron shutdown from February 11 to February 20. During the vacuum shutdown some minor modifications were made in the location of the perturbation coil for the resonant-extraction system. A new scintillator was installed on the second extraction magnet for diagnostics in the extraction studies and for eventual routine tuning for the external proton beam. This shutdown was one of several Bevatron shutdowns planned for the latter half of this fiscal year. These shutdowns are anticipated in order to carry out the operation and experimental-physics program at a reduced level as dictated by cutbacks in the high-energy physics budget.

An unscheduled shutdown of the Bevatron occurred at 1:30 a.m. on March 20, 1968, when power feeding the Laboratory was interrupted following the collapse of a Pacific Gas and Electric Company's transmission-line tower. The tower in the hills east of the Laboratory had been dynamited. Power was restored that evening at 9:30 p. m. Bevatron operation resumed at 2:30 a. m. on March 21.

The third Bevatron Users' meeting was held on December 16, 1967. Current topics in high-energy physics were discussed together with the future Bevatron program and schedule of experiments. Ideas were discussed for future accelerators using nonconventional techniques. The ideas covered were the use of superconductivity magnets and acceleration of particles by the coherent field of an electron ring.

The major effort in machine improvement was devoted to the study and tests of resonant extraction of the external proton beam. Theoretical studies and measurements indicated that part of the problems in resonant extraction were caused by the nonlinearities in the Bevatron field. To further study this effect, some of the pole-face windings, used to correct the n value at injection, were pulsed to about 100 A. By using the pulsed currents, all particles in the circulating beam can now be fed into similar resonant growth trajectories at $\nu = 2/3$. The present extraction efficiency, with a 1/2-in. -thick septum on the first magnet, is about 35%. These studies will continue.

On December 19, 1966, a fracture was discovered in a rotor pole in one of the Bevatron main ring-magnet motor-generator sets. Subsequent inspection revealed fractures in other rotor poles. The shutdown to replace all the rotor poles ended on June 3, 1967. There was concern as to the cause of the fractures. Was it just 12 years of operation or was it changes in operating modes in the last few years that had caused the damage? A study program was started to investigate the problem. Part of the program was to install fatigue life gages on the generator pole-end laminations. These gages are similar in appearance to strain gages. However, large amplitudes of cyclic stress generate an irreversible resistance change in the gages. These gages can be checked periodically to see if any excessive stresses have occurred.

In November 1967 two of these gages were found damaged. Small cracks, practically undetectable to the naked eye, had developed in two pole laminations and propagated through the gages. In both cases the continuity of the gage was destroyed. A small hole was drilled at the end of each crack in an attempt to stop their propagation.

Calculations showed that the largest stresses were caused by change in rpm of the generators during the magnet pulse. The flattop mode of magnet pulsing used at the Bevatron is to invert one power supply and generator. One supply then drives the other to provide the lower voltage needed for the flattop current. One generator then speeds up and the other slows down. The longer the flattop the greater the rpm change of the generators. To reduce the stresses, the allowed change in rpm was lowered. This reduced the flattop length at 5.3 GeV from 1 to 0.8 sec.

The dovetail areas were carefully inspected each week. In April 1968 cracks were discovered in a third rotor pole. Holes were again drilled at the end of the crack to stop its propagation.

Three new poles have been ordered, and 150 extra laminations. The extra laminations will be used in a study of the factors influencing the formation and propagation of cracks in the dovetail region.

A new mode of the flattop operation is under study. It involves inverting half of the ignitrons on each machine during each pulse. This would redistribute the load equally between the machines and would also reduce the power supplied by the machines during flattop by about 80%. The speed change would be reduced by about 40%.

Tests and studies of this new mode have been started and will continue.

PUBLICATIONS AND PAPERS

1. Rules and Procedures for the Design and Operation of Hazardous Research Equipment at the Bevatron and 184-Inch Cyclotron, UCRL-17928, November 1967.
2. Kenneth C. Crebbin and Robert Frias, Bevatron Operation and Development No. 56, October through December 1967, UCRL-18228, April 1, 1968.
3. Kenneth C. Crebbin and Robert Frias, Bevatron Operation and Development No. 57, January through March 1968, UCRL-18259, to be issued.

184-INCH CYCLOTRON
James T. Vale in charge

MODEL OF RADIO-FREQUENCY SYSTEM FOR IMPROVEMENT OF 184-INCH CYCLOTRON

Leal Kanstein

Half-scale radio-frequency model studies have been continued, resulting in a design requiring less rf driving power.

The full-scale design criteria are:

(i) an rf swept frequency of 36 to 19 MHz;

(ii) an FM system capable of producing beam pulses at 300 Hz;

(iii) 40-kV dee voltage;

(iv) lowest rf drive power.

Twin rotary capacitors are used. Their axes are horizontal and in line with a short transition section that connects to the dee (see Fig. 1). The rotors are 2.5 ft in diameter on the model, and have ten sets of three teeth around the periphery. The stator has ten sets of four teeth spaced 1/8 in. from the rotor teeth.

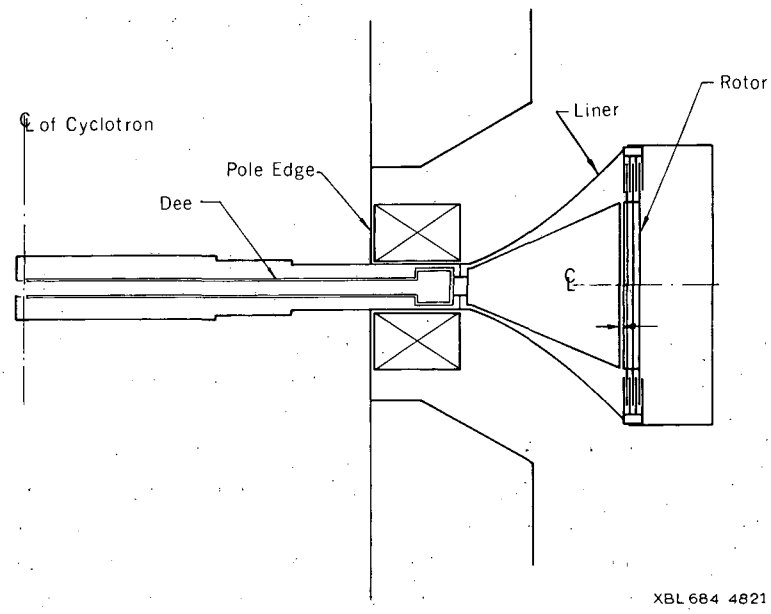

Fig. 1. Rotor axis horizontal, in line with stem; side view.

The rotor is coupled to the transition section through a rotating capacitor 20 in. in diameter with a 0.005-in. gap. The transition section converts the rectangular cross section of the dee to a round cross section for the rotor and provides current "streamlining" with appropriate impedance for lowest rotor-to-stator voltage.

The dee is split along the radial line of symmetry to simplify installation and to eliminate dee cross modes (see Fig. 2).

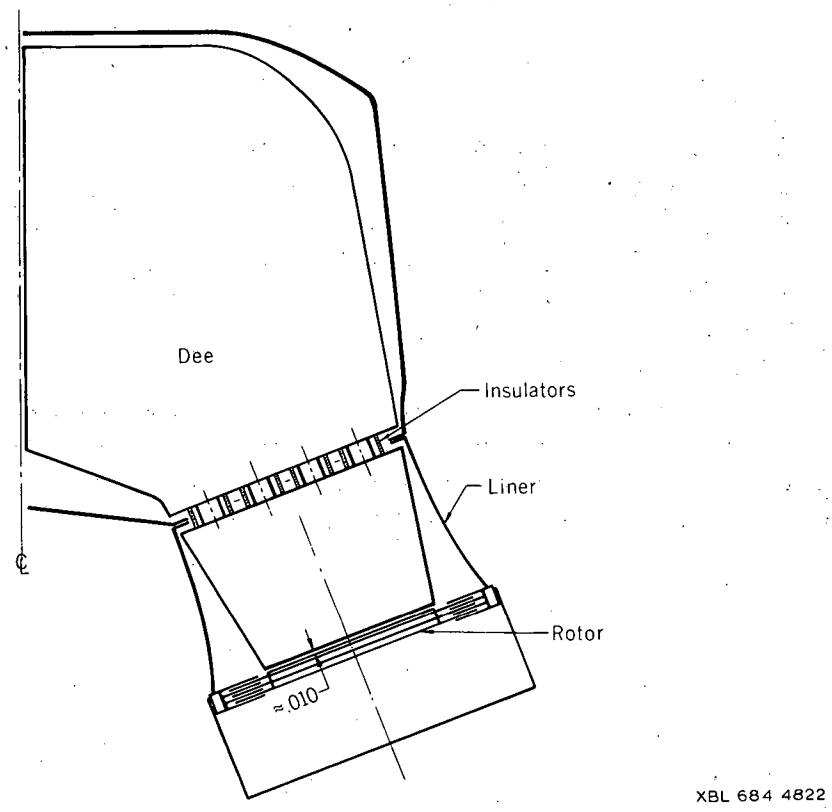

Fig. 2. Half system. Rotor axis horizontal, in line with stem; plan view.

The principal advantage of this design is that rf current flows through all the sets of rotor and stator teeth simultaneously, resulting in a lower current density and less rf power loss in the capacitor.

The model is excited with two 304 tubes connected in parallel, coupled to the dee system through tapered transmission lines and loops in the transition sections.

Model measurements indicate that about 200 kW of rf power is sufficient to produce 40 kV at the dee lip of the full-scale machine, and that the maximum voltage from rotor to stator is about 1.3 times the dee voltage. No spurious modes are observed within the frequency range with the exception of the cavity resonance of the vacuum tank, which may be balanced out by adjustment of the vertical symmetry, as is done in the present machine.

Physics Research Staff

M. A. Abolins
R. Albert
G. Alexander
L. W. Alvarez
K. Bardakci
W. Bierter
R. W. Birge
R. W. Bland
M. Bloxam
A. Bonney
G. Borreani
R. J. Budnitz
F. P. Calaprice
O. Chamberlain
G. F. Chew
W. Chinowsky
W. W. Chupp
A. R. Clark
F. Cole
E. Commins
B. Cork
D. G. Coyne
F. S. Crawford
K. M. Crowe
O. I. Dahl
P. M. Dauber
P. H. Eberhard
R. Eden
T. Elioff
R. P. Ely
A. Firestone
S. H. Flatte
J. Franck
J. H. Friedman
A. B. Galtieri
M. Garnjost
A. A. Garren
G. Gidal
W. Gilbert
G. Goldhaber
D. E. Greiner
G. A. Grin
T. Hadeishi
D. E. Hall
M. Halpern
J. Harte
R. Haymaker
H. H. Heckman, Jr.
A. C. Helmholz
E. Hubbard
J. D. Jackson
C. E. Johnson
C. Johnson
D. L. Judd
J. A. Kadyk
G. E. Kalmus
S. N. Kaplan
R. Karplus
A. N. Kaufman
L. Kaufman
D. Keefe
E. Kelly
R. W. Kenney
L. T. Kerth
W. Kunkel
L. J. Laslett
J. V. Lepore
E. J. Lofgren
G. R. Lynch
S. Mandelstam
R. Marrus
E. M. McMillan
D. H. Miller
B. J. Moyer
D. Newton
B. Pardoe
S. I. Parker
A. S. Parsons
H. W. Patterson
A. C. Paul
V. Perez-Mendez
J. Peterson
A. Pignotti
W. M. Powell
L. R. Price
M. H. Prior
M. Pripstein
R. Pyle
M. S. Rabin
W. Rarita
C. A. Rey
R. J. Riddell
G. Ringland
A. H. Rosenfeld
R. R. Ross
W. N. Ross
L. Ruby
S. G. Schmelling
C. H. Schmid
N. Schmidt
P. E. Schmidt
C. Schwartz
E. Segrè
A. M. Sessler
G. Shapiro
H. Shugart
G. Smith
L. Smith
P. H. Soding
F. T. Solmitz
H. P. Stapp
H. M. Steiner
M. L. Stevenson
R. Stiening
W. J. Swiatecki
R. L. Thews
R. L. Thornton

G. Tindle
G. H. Trilling
R. D. Tripp
P. Truoel
J. Vale
C. Van Atta
M. A. Wahlig
R. Wallace
K. M. Watson
H. L. Weisberg
W. A. Wenzel
H. White
E. Wickmann
C. E. Wiegand
C. G. Wohl
J. R. Yellin
A. C. Zemach

Mathematics and Computing research staff members are identified in the section on Computing and Data Handling on pages 75 through 89.

Permuted Keyword Index

The following pages are an alphabetical permuted index of the material in this report. Author's names are included. The index was prepared by the IBM-1401 computer using the key-word-plus-title program KWPT. All significant words are indexed; insignificant words have been automatically rejected by the computer. In some cases, the titles have been edited slightly to ensure proper word combination during automatic indexing and to provide maximum meaningful information.

Indexed terms are alphabetized and displayed in the left column of the index. The middle column shows the complete title and authors. The page number is given in the right column. Following the word index is the number index, which treats numbers as key words.

Your comments about the usefulness of this index and possible improvements are invited. Address such comments to Miss Gloria Smith, who is responsible for the automated indexing, or to the editor, Mr. Gerald Behman.

ABOLINS	DEUTERON MISSING-MASS EXPERIMENT. M. A. ABOLINS, G. S. SMITH, L. H. SMITH, AND A. B. WICKLUND.	27
ABOLINS	PI-PLUS DEUTERON INTERACTIONS FROM 1.1 TO 2.3 GEV/C. M. A. ABOLINS, O. I. DAHL, G. DANBURG, D. DAVIES, AND R. RADER.	23
ABOLINS	PI-PLUS DEUTERON INTERACTIONS FROM 2.8 TO 4.2 GEV/C. M. A. ABOLINS, O. I. DAHL, AND P. HOCH.	22
ABOLINS	P67 EXPERIMENT. M. A. ABOLINS, A. RITTENBERG, AND G. A. SMITH.	24
ACCELERATOR	ACCELERATOR AND MAGNET DESIGN PROGRAMS. R. AHLSTRAND, V. O. BRADY, B. R. BURKHART, E. R. CLOSE, J. S. COLONIAS, R. N. HEALEY, B. S. LEVINE, B. M. POWELL, AND S. J. SACKETT.	80
ACCELERATOR	ACCELERATOR EXPERIMENTS USING SPARK CHAMBERS.	26
ACCELERATOR	ACCELERATOR LINK.	84
ACCELERATOR	ACCELERATOR THEORY.	12
ACCELERATOR	COLLECTIVE ION ACCELERATOR. L. J. LASLETT AND A. M. SESSLER.	12
ACCELERATOR	ELECTRON RING ACCELERATOR.	99
ACCELERATOR STUDY	ACCELERATOR STUDY ACTIVITIES.	95
ACCELERATOR STUDY	ACCELERATOR STUDY PUBLICATIONS -- LOFGREN.	100
ACCELERATOR STUDY	ACCELERATOR STUDY. E. J. LOFGREN.	95
ACCOUNTING	EVENT ACCOUNTING. S. BUCKMAN, P. DAVIS, AND C. OSBORNE.	92
AHLSTRAND	ACCELERATOR AND MAGNET DESIGN PROGRAMS. R. AHLSTRAND, V. O. BRADY, B. R. BURKHART, E. R. CLOSE, J. S. COLONIAS, R. N. HEALEY, B. S. LEVINE, B. M. POWELL, AND S. J. SACKETT.	80
ALBERT	PARTICLE IDENTIFIER. D. GREINER, R. ALBERT, AND H. HECKMAN.	43
ALBRECHT	PROGRAMMING FOR POWELL-BIRGE GROUP. H. C. ALBRECHT, H. HANERFELD, M. H. MYERS, J. TYSON, AND J. VISSER,	75
ALBRIGHT	QUASILINEAR EVOLUTION OF THE WEIBEL-KAHN INSTABILITY. N. ALBRIGHT.	11
ALEXANDER	K-PLUS PROTON INTERACTIONS AT 9 GEV/C. G. ALEXANDER, A. FIRESTONE, C. M. FU, AND G. GOLDHABER.	69
ALEXANDER	LAMBDA-ZERO PROTON INTERACTIONS. J. A. KADYK, G. H. TRILLING, P. GAPOSCHKIN, G. ALEXANDER, R. A. HESS, S. R. G. FANG, AND F. M. HAMZEH.	67
ALGEBRA	CURRENT ALGEBRA AND LOW-ENERGY MESON BARYON SCATTERING. P. SHERS.	7
ALGEBRA	HADRON SUM RULES FROM SU(3) ⊗ SU(3) CURRENT ALGEBRA. R. CHRISTENSEN.	7
ALGEBRAIC	COMPUTATIONS CONCERNING NONLINEAR, AREA-PRESERVING ALGEBRAIC EQUATIONS. L. J. LASLETT.	12
ALSTON-GARNJOST	K82 EXPERIMENT. S. M. FLATTE, J. H. FRIEDMAN, A. BARBARO-GALTIERI, M. ALSTON-GARNJOST, G. R. LYNCH, M. S. RABIN, F. T. SOLMITZ, P. DAVIS, AND V. WALUCH.	26
ALSTON-GARNJOST	STUDY OF THE NEUTRAL K MESON. B. WEBBER, F. S. CRAWFORD, AND M. ALSTON-GARNJOST.	22

ALVAREZ	COSMIC-RAY MUON EXPERIMENT. L. W. ALVAREZ, P. M. DAUBER, S. M FLATTE, L. H. SMITH, M. L. STEVENSON, AND M. A. WAHLIG.	28
ALVAREZ	EXPERIMENTAL PHYSICS. L. W. ALVAREZ.	17
ALVAREZ	HIGH-ALTITUDE PARTICLE PHYSICS AND COSMIC-RAY EXPERIMENTAL FACILITY. L. W. ALVAREZ, P. M. DAUBER, L. J. LLOYD, L. H. SMITH, AND M. A. WAHLIG.	27
ALVAREZ	PUBLICATIONS -- ALVAREZ.	36
AMPLIFIER	FLUX AMPLIFIER. P. EBERHARD AND R. ROSS.	29
ANDERSON	BP66 EXPERIMENT. J. A. ANDERSON, D. B. SMITH, AND G. A. SMITH.	23
ANGULAR DISTRIB.	FINITE WIDTHS AND ANGULAR DISTRIBUTIONS. G. A. RINGLAND AND R. L. THEWS.	6
ANKENBRANDT	NUCLEON-NUCLEON TRIPLE SCATTERING. C. M. ANKENBRANDT, D. CHENG, L. T. KERTH, K. C. LEUNG, B. MACDONALD, AND P. SURKO.	46
ANNIHILATION	PROTON-ANTIPROTON ANNIHILATION IN A MULTIPERIPHERAL MODEL. G. F. CHEW AND A. PIGNOTTI.	1
ANTIK-ZERO	REACTIONS K-MINUS PROTON GOES TO ANTIK-ZERO NEUTRON AND K-MINUS PROTON GOES TO LAMBDA PI-ZERO. S. M. FLATTE, A. BARBARO-GALTIERI, R. D. TRIPP, AND C. G. WOHL.	19
ANTIPROTON	ANTIPROTON-PROTON INTERACTIONS. M. MANDELKERN, W. CHINOWSKY, R. BURNS, P. CONDON, J. SCHULTZ, AND P. SCHMIDT.	61
ANTIPROTON	PROTON-ANTIPROTON ANNIHILATION IN A MULTIPERIPHERAL MODEL. G. F. CHEW AND A. PIGNOTTI.	1
ARBAB	FACTORIZATION, KINEMATIC SINGULARITIES, AND CONSPIRACIES. F. ARBAB AND J. D. JACKSON.	2
ARBAB	REGGE-POLE MODEL WITH THE M = 1 PION IN PI-PLUS PROTON GOES TO RHO-ZERO DELTA-PLUSPLUS AND PI-PLUS PROTON GOES TO RHO-PLUS PROTON. F. ARBAB AND R. C. BROWER.	1
ARBAB	UNITARITY AND FINITE-ENERGY SUM RULES. F. ARBAB.	4
AREA-PRESERVING	COMPUTATIONS CONCERNING NONLINEAR, AREA-PRESERVING ALGEBRAIC EQUATIONS. L. J. LASLETT.	12
ARKTST	ARKTST.	78
ARMSTRONG	PROGRAMMING FOR TRILLING-GOLDHABER GROUP. D. ARMSTRONG, E. R. BURNS, B. H. HALL, D. P. LAMB, AND J. G. MILLER.	77
ASSEMBLER	PDP-7, PDP-9 ASSEMBLER.	85
ASYMMETRY	CHARGE ASYMMETRY IN K-MU3-ZERO DECAYS. R. J. BUDNITZ, R. L. MCCARTHY, D. H. MILLER, AND W. N. ROSS.	40
ASYMMETRY	K-TWO-ZERO CHARGE ASYMMETRY. D. H. MILLER AND M. A. PACIOTTI.	40
ASYMPTOTIC	NEW ASYMPTOTIC EXPANSION OF THE S MATRIX. G. L. TINDLE.	6
ATCHLEY	COMPUTER OPERATIONS. P. A. RHODES AND F. M. ATCHLEY.	88
ATOMIC-BEAM	ATOMIC-BEAM GROUP. H. SHUGART.	65
ATOMIC-BEAM	ATOMIC-BEAM STUDIES.	65
ATOMS	PIONIC ATOMS. R. KUNSELMAN AND G. A. GRIN.	61
AUTOMATIC	DAPR -- FULLY AUTOMATIC EVENT SCANNING AND MEASUREMENT. B. BRITTON, J. CRAWFORD, J. FRANZ, W. S. GEE, D. HALL, N. JONTULOVIC, H. WHITE, AND F. WINDORSKI.	92

AYRES	COMPARISON OF THE LIFETIMES OF PI-PLUS AND PI-MINUS. D. S. AYRES, D. O. CALDWELL, A. M. CORMACK, V. B. ELINGS, A. J. GREENBERG, W. P. HESSE, R. W. KENNEY, AND R. J. MORRISON.	49
BACKSCATTERED	BACKSCATTERED LASER BEAM AT SLAC. W. PODOLSKY, A. H. ROSENFELD, P. SODING, R. D. TRIPP, AND M. S. RABIN, J. J. MURRAY, P. KLEIN, AND C. SINCLAIR.	26
BACKWARD	FINITE-ENERGY SUM RULES FOR BACKWARD PION-NUCLEON SCATTERING. H. LEE.	4
BAKER	MATHEMATICS AND COMPUTING. J. A. BAKER.	75
BAKER	PUBLICATIONS -- BAKER.	88
BANGERTER	CHARGE-EXCHANGE (K-MINUS PROTON GOES TO ANTIK-ZERO NEUTRON) AND ELASTIC (K-MINUS PROTON GOES TO K-MINUS PROTON) REACTIONS. T. S. MAST, R. BANGERTER, A. BARBARO-GALTIERI, AND R. D. TRIPP.	22
BANGERTER	STUDY OF SIGMA DECAY PARAMETERS. R. D. TRIPP, F. T. SOLMITZ, AND R. O. BANGERTER.	20
BARASH-SCHMIDT	DATA ON PARTICLES AND RESONANT STATES. A. H. ROSENFELD, N. BARASH-SCHMIDT, A. BARBARO-GALTIERI, L. R. PRICE, P. SÖDING, AND C. G. WOHL.	36
BARBARO-GALTIERI	CHARGE-EXCHANGE (K-MINUS PROTON GOES TO ANTIK-ZERO NEUTRON) AND ELASTIC (K-MINUS PROTON GOES TO K-MINUS PROTON) REACTIONS. T. S. MAST, R. BANGERTER, A. BARBARO-GALTIERI, AND R. D. TRIPP.	22
BARBARO-GALTIERI	DATA ON PARTICLES AND RESONANT STATES. A. H. ROSENFELD, N. BARASH-SCHMIDT, A. BARBARO-GALTIERI, L. R. PRICE, P. SÖDING, AND C. G. WOHL.	36
BARBARO-GALTIERI	K-MINUS INTERACTIONS IN DEUTERIUM. A. BARBARO-GALTIERI, M. MATISON, AND A. RITTENBERG.	20
BARBARO-GALTIERI	K-MINUS PROTON GOES TO LAMBDA PI-PLUS PI-MINUS AND K-MINUS PROTON GOES TO LAMBDA PLUS MISSING MASS. T. S. MAST, A. BARBARO-GALTIERI, AND R. D. TRIPP.	21
BARBARO-GALTIERI	K82 EXPERIMENT. S. M. FLATTE, J. H. FRIEDMAN, A. BARBARO-GALTIERI, M. ALSTON-GARNJOST, G. R. LYNCH, M. S. RABIN, F. T. SOLMITZ, P. DAVIS, AND V. WALUCH.	26
BARBARO-GALTIERI	REACTIONS K-MINUS PROTON GOES TO ANTIK-ZERO NEUTRON AND K-MINUS PROTON GOES TO LAMBDA PI-ZERO. S. M. FLATTE, A. BARBARO-GALTIERI, R. D. TRIPP, AND C. G. WOHL.	19
BARBARO-GALTIERI	STUDY OF THE REACTION K-MINUS PROTON GOES TO SIGMA-PLUSMINUS PI-MINUSPLUS. P. M. DAUBER AND A. BARBARO-GALTIERI.	19
BEALS	SYSTEMS PROGRAMMING. E. R. BEALS, W. H. BENSON, J. R. BORGES, D. N. BRAINARD, W. F. DEMPSTER, R. L. FINK, J. E. GLASNER, W. H. HUTCHINSON, J. P. JOHNSON, J. A. KNIGHT, S. J. PENNY, D. F. STEVENS, AND R. E. TRACY.	84
BEAM	BACKSCATTERED LASER BEAM AT SLAC. W. PODOLSKY, A. H. ROSENFELD, P. SODING, R. D. TRIPP, AND M. S. RABIN, J. J. MURRAY, P. KLEIN, AND C. SINCLAIR.	26
BEAM	NEW 25-INCH BUBBLE-CHAMBER BEAM. J. A. KADYK, D. G. COYNE, AND W. R. BUTLER.	67
BELSHE	MISCELLANEOUS PROGRAMS. R. A. BELSHE, M. L. CLINNICK, E. A. COLEMAN, J. P. TYSON, D. F. STEVENS, D. A. WILBER, AND E. E. WILLIAMS.	82
BENSON	RESEARCH IN MATHEMATICS AND COMPUTING SCIENCES. W. H. BENSON, P. CONCUS, H. HANERFELD, D. W. JENSON, L. P. MEISSNER, G. C. NOONEY, AND L. S. VARDAS.	85
BENSON	SYSTEMS PROGRAMMING. E. R. BEALS, W. H. BENSON, J. R. BORGES, D. N. BRAINARD, W. F. DEMPSTER, R. L. FINK, J. E. GLASNER, W. H. HUTCHINSON, J. P. JOHNSON, J. A. KNIGHT, S. J. PENNY, D. F. STEVENS, AND R. E. TRACY.	84

BETHE-SALPETER	BOOTSTRAP SOLUTIONS OF THE BETHE-SALPETER EQUATION. W. B. KAUFMANN.	7
BETHE-SALPETER	TWO-CHANNEL CALCULATIONS WITH THE BETHE-SALPETER EQUATION. W. B. KAUFMANN.	7
BEVATRON	BEVATRON OPERATIONS.	101
BEVATRON	BEVATRON PUBLICATIONS -- LOFGREN.	103
BEVATRON	BEVATRON. E. J. LOFGREN.	101
BIERTER	N-BODY FADDEEV EQUATIONS AND THE CLUSTER EXPANSION. W. BIERTER.	12
BIERTER	S-OPERATOR THEORY OF WEAK INTERACTIONS. W. BIERTER.	9
BINSTOCK	NUCLEON-NUCLEON SCATTERING POTENTIAL. J. BINSTOCK.	9
BIOMEDICAL	BIOMEDICAL-APPLICATIONS PROGRAMS. E. H. COLEMAN, R. HINKINS, W. D. HOGAN, M. W. HOROVITZ, G. M. LITTON, T. F. MAHAN, M. C. SIMMONS, AND K. G. WILEY.	81
BIRGE	DATA REDUCTION. R. W. BIRGE AND P. W. WEBER.	56
BIRGE	EXPERIMENTAL PHYSICS. W. M. POWELL AND R. W. BIRGE.	53
BIRGE	ON-LINE SYSTEM. R. W. BIRGE AND P. W. WEBER.	55
BIRGE	PI-PLUS PROTON INTERACTIONS FROM 2.9 TO 4.1 GEV/C. D. G. BROWN, R. W. BIRGE, G. GIDAL, AND G. BORREANI.	54
BIRGE	PUBLICATIONS -- POWELL-BIRGE.	57
BIRGE	TWO-PION EVENTS IN PI-PLUS PROTON FILM AT 1.35, 1.43, AND 1.68 GEV/C. R. W. BIRGE AND G. E. KALMUS.	55
BITAR	DAUGHTERS, CONSPIRACIES, AND LORENTZ SYMMETRY. K. M. BITAR AND G. L. TINDLE.	5
BITAR	SELF-CONSISTENT SYMMETRY PROPERTIES OF FINITE-ENERGY SUM RULES. C. SCHMID AND J. YELLIN WITH J. SHAPIRO AND K. BITAR.	5
BLAND	K-PLUS DEUTERON INTERACTION FROM 800 TO 1600 MEV/C. R. BLAND, A. A. HIRATA, G. GOLDHABER, V. H. SEEGER, G. H. TRILLING, AND C. G. WOHL.	68
BLOCK-SUCCESSIVE	NONLINEAR BLOCK-SUCCESSIVE OVERRELAXATION.	86
BLOOM	SEARCH FOR T VIOLATION IN INELASTIC ELECTRON-PROTON SCATTERING. O. CHAMBERLAIN, G. SHAPIRO, H. L. WEISBERG, P. R. ROBRISH, S. ROCK, S. SHANNON, R. TAYLOR, L. MO, E. BLOOM, J. LITT, H. KENDALL, AND J. FRIEDMAN.	62
BOLTZMANN	BOLTZMANN EQUATION FOR POLYATOMIC GAS. W. WOLLMAN.	12
BOOKKEEPING	BOOKKEEPING SYSTEM.	75
BOOSTER	BOOSTER SYNCHROTRON.	95
BOOTSTRAP	BOOTSTRAP SOLUTIONS OF THE BETHE-SALPETER EQUATION. W. B. KAUFMANN.	7
BOOTSTRAP	MULTIPERIPHERAL BOOTSTRAP MODEL FOR HIGH-ENERGY COLLISIONS. G. F. CHEW AND A. PIGNOTTI.	1
BORGES	SYSTEMS PROGRAMMING. E. R. BEALS, W. H. BENSON, J. R. BORGES, D. N. BRAINARD, W. F. DEMPSTER, R. L. FINK, J. E. GLASNER, W. H. HUTCHINSON, J. P. JOHNSON, J. A. KNIGHT, S. J. PENNY, D. F. STEVENS, AND R. E. TRACY.	84
BORREANI	PI-PLUS PROTON INTERACTIONS FROM 2.9 TO 4.1 GEV/C. D. G. BROWN, R. W. BIRGE, G. GIDAL, AND G. BORREANI.	54
BORREANI	STUDY OF THE REACTION PI-PLUS PROTON GOES TO ETA-ZERO DELTA-PLUSPLUS. G. BORREANI, G. GIDAL, AND G. E. KALMUS.	55

BORREANI	STUDY OF THE STRANGE-PARTICLE CHANNELS IN PI-PLUS PROTON AT 1.34, 1.43, AND 1.68 GEV/C. G. BORREANI AND G. E. KALMUS.	55
BOSON	PARTIAL WIDTHS OF A HEAVY BOSON, T(2550) GOES TO PI-PI, NUCLEON-ANTINUCLEON. C. SCHMID.	5
BOYARSKI	PHOTOPRODUCTION OF VECTOR MESONS. L. KAUFMAN, V. PEREZ-MENDEZ, A. W. STETZ, S. H. WILLIAMS, A. BOYARSKI, F. BULOS, R. DIEBOLD, R. LARSEN, D. LEITH, B. RICHTER, AND W. BUSZA.	50
BP66	BP66 EXPERIMENT. J. A. ANDERSON, D. B. SMITH, AND G. A. SMITH.	23
BRADY	ACCELERATOR AND MAGNET DESIGN PROGRAMS. R. AHLSTRAND, V. O. BRADY, B. R. BURKHART, E. R. CLOSE, J. S. COLONIAS, R. N. HEALEY, E. S. LEVINE, B. M. POWELL, AND S. J. SACKETT.	80
BRAINARD	SYSTEMS PROGRAMMING. E. R. BEALS, W. H. BENSON, J. R. BORGES, D. N. BRAINARD, W. F. DEMPSTER, R. L. FINK, J. E. GLASNER, W. H. HUTCHINSON, J. P. JOHNSON, J. A. KNIGHT, S. J. PENNY, D. F. STEVENS, AND R. E. TRACY.	84
BRANCHING RATIO	MEASUREMENT OF THE (K-PLUS DECAY TO POSITRON + NEUTRINO) (K-PLUS DECAY TO MU-PLUS + NEUTRINO) BRANCHING RATIO. A. R. CLARK, B. CORK, T. ELIOFF, D. KEEFE, L. T. KERTH, J. F. MCREYNOLDS, AND W. A. WENZEL.	45
BRITTON	DAPR -- FULLY AUTOMATIC EVENT SCANNING AND MEASUREMENT. B. BRITTON, J. CRAWFORD, J. FRANZ, W. S. GEE, D. HALL, N. JONTULOVIC, H. WHITE, AND F. WINDORSKI.	92
BRODY	LRL-SLAC EXPERIMENT ON PI-MINUS PROTON INELASTIC REACTIONS. L. R. PRICE, A. H. ROSENFELD, P. SODING, D. HERNDON, R. LONGACRE, D. LEITH, A. BRODY, AND B. SHEN.	25
BROWER	REGGE-POLE MODEL WITH THE M = 1 PION IN PI-PLUS PROTON GOES TO RHO-ZERO DELTA-PLUSPLUS AND PI-PLUS PROTON GOES TO RHO-PLUS PROTON. F. ARBAB AND R. C. BROWER.	1
BROWN	NUCLEAR CHEMISTRY PROGRAMMING. N. BROWN, P. A. COLLOM, G. LITTON, AND C. E. RUGGE.	79
BROWN	PI-PLUS PROTON INTERACTIONS FROM 2.9 TO 4.1 GEV/C. D. G. BROWN, R. W. BIRGE, G. GIDAL, AND G. BORREANI.	54
BUBBLE CHAMBER	25-INCH HYDROGEN BUBBLE CHAMBER. W. M. POWELL AND G. J. ECKMAN.	53
BUBBLE CHAMBER	BUBBLE-CHAMBER EXPERIMENTS.	17
BUBBLE CHAMBER	NEW 25-INCH BUBBLE-CHAMBER BEAM. J. A. KADYK, D. G. COYNE, AND W. R. BUTLER.	67
BUBBLE CHAMBER	25-INCH HYDROGEN BUBBLE-CHAMBER RUN. POWELL-BIRGE GROUP.	53
BUCKMAN	EVENT ACCOUNTING. S. BUCKMAN, P. DAVIS, AND C. OSBORNE.	92
BUCKMAN	FOG -- GEOMETRY AND SPACE RECONSTRUCTION. S. BUCKMAN, J. FRANZ, AND F. WINDORSKI.	91
BUCKMAN	HAZE -- SEMIAUTOMATIC EVENT MEASUREMENT. S. BUCKMAN, J. CRAWFORD, P. DAVIS, W. S. GEE, J. GREENE, C. OSBORNE, AND L. SHALZ.	91
BUDNITZ	CHARGE ASYMMETRY IN K-MU3-ZERO DECAYS. R. J. BUDNITZ, R. L. MCCARTHY, D. H. MILLER, AND W. N. ROSS.	40
BULOS	PHOTOPRODUCTION OF VECTOR MESONS. L. KAUFMAN, V. PEREZ-MENDEZ, A. W. STETZ, S. H. WILLIAMS, A. BOYARSKI, F. BULOS, R. DIEBOLD, R. LARSEN, D. LEITH, B. RICHTER, AND W. BUSZA.	50

BURKHART	ACCELERATOR AND MAGNET DESIGN PROGRAMS. R. AHLSTRAND, V. O. BRADY, B. R. BURKHART, E. R. CLOSE, J. S. COLONIAS, R. N. HEALEY, E. S. LEVINE, B. M. POWELL, AND S. J. SACKETT.	80
BURNS	ANTIPROTON-PROTON INTERACTIONS. M. MANDELKERN, W. CHINOWSKY, R. BURNS, P. CONDON, J. SCHULTZ, AND P. SCHMIDT.	61
BURNS	PROGRAMMING FOR TRILLING-GOLDHABER GROUP. D. ARMSTRONG, E. R. BURNS, B. H. HALL, D. P. LAMB, AND J. G. MILLER.	77
BUSZA	PHOTOPRODUCTION OF VECTOR MESONS. L. KAUFMAN, V. PEREZ-MENDEZ, A. W. STETZ, S. H. WILLIAMS, A. BOYARSKI, F. BULOS, R. DIEBOLD, R. LARSEN, D. LEITH, B. RICHTER, AND W. BUSZA.	50
BUTLER	NEW 25-INCH BUBBLE-CHAMBER BEAM. J. A. KADYK, D. G. COYNE, AND W. R. BUTLER.	67
BUTLER	PI-PLUS PROTON INTERACTION AT 3.7 GEV/C. W. R. BUTLER, D. G. COYNE, P. GAPOSCHKIN, AND J. MACNAUGHTON.	68
CALCULATIONS	DOSIMETRIC CALCULATIONS. G. M. LITTON, P. G. STEWARD, AND R. W. WALLACE.	71
CALCULATIONS	TWO-CHANNEL CALCULATIONS WITH THE BETHE-SALPETER EQUATION. W. B. KAUFMANN.	7
CALDWELL	COMPARISON OF THE LIFETIMES OF PI-PLUS AND PI-MINUS. D. S. AYRES, D. O. CALDWELL, A. M. CORMACK, V. B. ELINGS, A. J. GREENBERG, W. P. HESSE, R. W. KENNEY, AND R. J. MORRISON.	49
CAPTURE	A SEARCH FOR EXCITED LEVELS OF NITROGEN-15 PRODUCED BY MU-MINUS CAPTURE IN OXYGEN-16. S. N. KAPLAN, R. B. PYLE, AND L. E.	49
CASCADE	PRODUCTION AND DECAY OF CASCADE HYPERONS. P. M. DAUBER AND R. MULLER.	18
CENCE	K-E4 EXPERIMENT. B. GAULD, V. PEREZ-MENDEZ, R. CENCE, B. D. JONES, R. MORGADO, M. PETERS, AND V. Z. PETERSON.	49
CENCE	K-L-ZERO GOES TO 2 PI-ZERO. A. C. HELMHOLZ, R. W. KENNEY, I. R. LINSCOTT, B. J. MOYER, W. P. OLIVER, S. I. PARKER, C. A. REY, R. J. CENCE, B. D. JONES, V. Z. PETERSON, AND V. J. STENGER.	47
CHAMBERLAIN	EXPERIMENTAL PHYSICS. E. SEGRE AND O. CHAMBERLAIN.	59
CHAMBERLAIN	PHASE-SHIFT ANALYSIS OF CHARGED-PION PROTON ELASTIC-SCATTERING EXPERIMENTS. C. H. JOHNSON, JR., O. CHAMBERLAIN, R. FIELD, AND H. STEINER.	62
CHAMBERLAIN	POLARIZED-PROTON TARGET IMPROVEMENTS. O. CHAMBERLAIN, W. GORN, C. MOREHOUSE, T. POWELL, P. ROBRISH, S. ROCK, S. SHANNON, G. SHAPIRO, AND H. WEISBERG.	63
CHAMBERLAIN	PUBLICATIONS -- SEGRE-CHAMBERLAIN.	63
CHAMBERLAIN	SEARCH FOR T VIOLATION IN INELASTIC ELECTRON-PROTON SCATTERING. O. CHAMBERLAIN, G. SHAPIRO, H. L. WEISBERG, P. R. ROBRISH, S. ROCK, S. SHANNON, R. TAYLOR, L. MO, E. BLOOM, J. LITT, H. KENDALL, AND J. FRIEDMAN.	62
CHAMBERS	ACCELERATOR EXPERIMENTS USING SPARK CHAMBERS.	26
CHAN	LOW-ENERGY K-MINUS PROTON INTERACTIONS. J. H. CHAN AND J. A. KADYK.	67
CHANNELS	STUDY OF THE STRANGE-PARTICLE CHANNELS IN PI-PLUS PROTON AT 1.34, 1.43, AND 1.68 GEV/C. G. BORREANI AND G. E. KALMUS.	55
CHARGE-EXCHANGE	CHARGE-EXCHANGE (K-MINUS PROTON GOES TO ANTIK-ZERO NEUTRON) AND ELASTIC (K-MINUS PROTON GOES TO K-MINUS PROTON) REACTIONS. T. S. MAST, R. BANGERTER, A. BARBARO-GALTIERI, AND R. D. TRIPP.	22

CHARGED-PION	PHASE-SHIFT ANALYSIS OF CHARGED-PION PROTON ELASTIC-SCATTERING EXPERIMENTS. C. H. JOHNSON, JR., O. CHAMBERLAIN, R. FIELD, AND H. STEINER.	62
CHEMISTRY	NUCLEAR CHEMISTRY PROGRAMMING. N. BROWN, P. A. COLLOM, G. LITTON, AND C. E. RUGGE.	79
CHEN	ETA LEPTONIC DECAYS. M. CHEN, R. HILDEBRAND, R. STIENING, AND C. WIEGAND.	60
CHEN	STUDY OF THE K-PLUS DECAY TO MU-PLUS NEUTRINO GAMMA. M. CHEN, D. CUTTS, M. DEUTSCH, R. STIENING, AND C. WIEGAND.	60
CHENG	MEASUREMENT OF NEUTRON PROTON GOES TO GAMMA DEUTERON ANGULAR DISTRIBUTION AS A DIRECT TEST OF TIME REVERSAL IN THE ELECTROMAGNETIC INTERACTION. D. CHENG, V. PEREZ-MENDEZ, J. M. SPERINDE, J. A. HELLAND, B. L. SCHROCK, R. P. HADDOCK, J. DETOUEF, M. J. LONGO, S. WILSON, AND K. K. YOUNG.	50
CHENG	NUCLEON-NUCLEON TRIPLE SCATTERING. C. M. ANKENBRANDT, D. CHENG, L. T. KERTH, K. C. LEUNG, B. MACDONALD, AND P. SURKO.	46
CHEW	MULTIPERIPHERAL BOOTSTRAP MODEL FOR HIGH-ENERGY COLLISIONS. G. F. CHEW AND A. PIGNOTTI.	1
CHEW	PROTON-ANTIPROTON ANNIHILATION IN A MULTIPERIPHERAL MODEL. G. F. CHEW AND A. PIGNOTTI.	1
CHEW	PUBLICATIONS -- CHEW.	13
CHEW	THEORETICAL PHYSICS. G. F. CHEW.	1
CHINOWSKY	ANTIPROTON-PROTON INTERACTIONS. M. MANDELKERN, W. CHINOWSKY, R. BURNS, P. CONDON, J. SCHULTZ, AND P. SCHMIDT.	61
CHINOWSKY	NUCLEON-NUCLEON INTERACTIONS. W. CHINOWSKY, P. SCHMIDT, W. GAGE, AND S. KLEIN.	60
CHINOWSKY	PI-MINUS PROTON INTERACTION AT 550 MEV/C. W. CHINOWSKY, P. SCHMIDT, AND W. GAGE.	61
CHRISLER	FAIR -- DATA DISPLAY. D. CHRISLER AND L. SHALZ.	92
CHRISTENSEN	HADRON SUM RULES FROM SU(3) $\otimes$ SU(3) CURRENT ALGEBRA. R. CHRISTENSEN.	7
CLARK	DIBOSON PRODUCTION BY 2-TO-5-GEV/C PIONS. A. R. CLARK, B. CORK, T. ELIOFF, L. T. KERTH, T. N. RANGASWAMY, AND W. A. WENZEL.	45
CLARK	MEASUREMENT OF THE (K-PLUS DECAY TO POSITRON + NEUTRINO) (K-PLUS DECAY TO MU-PLUS + NEUTRINO) BRANCHING RATIO. A. R. CLARK, B. CORK, T. ELIOFF, D. KEEFE, L. T. KERTH, J. F. MCREYNOLDS, AND W. A. WENZEL.	45
CLARK	NEUTRAL LEPTONIC CURRENTS. A. R. CLARK, T. ELIOFF, H. J. FRISCH, R. P. JOHNSON, D. KEEFE, L. T. KERTH, D. NEWTON, AND W. A. WENZEL.	45
CLINNICK	MISCELLANEOUS PROGRAMS. R. A. BELSHE, M. L. CLINNICK, E. A. COLEMAN, J. P. TYSON, D. F. STEVENS, D. A. WILBER, AND E. E. WILLIAMS.	82
CLOUDY	CLOUDY -- KINEMATICAL ANALYSIS. V. MORGAN.	91
CLUSTER	N-BODY FADDEEV EQUATIONS AND THE CLUSTER EXPANSION. W. BIERTER.	12
COBWEB	COBWEB SYSTEM.	76
COLEMAN	BIOMEDICAL-APPLICATIONS PROGRAMS. E. H. COLEMAN, R. HINKINS, W. D. HOGAN, M. W. HOROVITZ, G. M. LITTON, T. F. MAHAN, M. C. SIMMONS, AND K. G. WILEY.	81

COLEMAN	MISCELLANEOUS PROGRAMS. R. A. BELSHE, M. L. CLINNICK, E. A. COLEMAN, J. P. TYSON, D. F. STEVENS, D. A. WILBER, AND E. E. WILLIAMS.	82
COLLABORATION	PROGRAM IN COLLABORATION WITH MOYER-HELMHOLZ GROUP.	26
COLLISIONS	MULTIPERIPHERAL BOOTSTRAP MODEL FOR HIGH-ENERGY COLLISIONS. G. F. CHEW AND A. PIGNOTTI.	1
COLLISIONS	NONSTRANGE INTERACTIONS IN PROTON-PROTON COLLISIONS AT 6.6 GEV/C. E. GELLERT AND G. A. SMITH.	24
COLLISIONS	STRANGE-PARTICLE INTERACTIONS IN PROTON-PROTON COLLISIONS AT 5.5 AND 6.6 GEV/C. A. B. WICKLUND AND G. A. SMITH.	25
COLLOM	NUCLEAR CHEMISTRY PROGRAMMING. N. BROWN, P. A. COLLOM, G. LITTON, AND C. E. RUGGE.	79
COLONIAS	ACCELERATOR AND MAGNET DESIGN PROGRAMS. R. AHLSTRAND, V. O. BRADY, B. R. BURKHART, E. R. CLOSE, J. S. COLONIAS, R. N. HEALEY, E. S. LEVINE, B. M. POWELL, AND S. J. SACKETT.	80
COMPUTATIONS	COMPUTATIONS CONCERNING NONLINEAR, AREA-PRESERVING ALGEBRAIC EQUATIONS. L. J. LASLETT.	12
COMPUTER	COMPUTER OPERATIONS. P. A. RHODES AND F. M. ATCHLEY.	88
COMPUTER	COMPUTER PROGRAM DEVELOPMENT.	91
COMPUTER	COMPUTER TYPOGRAPHY.	85
COMPUTER	PHOTOPEAK ANALYSIS OF SEMICONDUCTOR GAMMA-RAY SPECTRA BY COMPUTER. J. T. ROUTTI AND S. G. PRUSSIN.	72
COMPUTING	MATHEMATICS AND COMPUTING. J. A. BAKER.	75
COMPUTING	RESEARCH IN MATHEMATICS AND COMPUTING SCIENCES. W. H. BENSON, P. CONCUS, H. HANERFELD, D. W. JENSON, L. P. MEISSNER, G. C. NOONEY, AND L. S. VARDAS.	85
CONCUS	RESEARCH IN MATHEMATICS AND COMPUTING SCIENCES. W. H. BENSON, P. CONCUS, H. HANERFELD, D. W. JENSON, L. P. MEISSNER, G. C. NOONEY, AND L. S. VARDAS.	85
CONDON	ANTIPROTON-PROTON INTERACTIONS. M. MANDELKERN, W. CHINOWSKY, R. BURNS, P. CONDON, J. SCHULTZ, AND P. SCHMIDT.	61
CONDUCTING	EQUILIBRIUM CONFIGURATIONS OF A CHARGED CONDUCTING DROP. W. J. SWIATECKI AND C. F. TSANG.	10
CONSPIRACIES	DAUGHTERS, CONSPIRACIES, AND LORENTZ SYMMETRY. K. M. BITAR AND G. L. TINDLE.	5
CONSPIRACIES	FACTORIZATION, KINEMATIC SINGULARITIES, AND CONSPIRACIES. F. ARBAB AND J. D. JACKSON.	2
CONSTRAINTS	EFFECTS OF PSEUDOTHRESHOLD CONSTRAINTS ON REGGE FITS. R. D. MATHEWS.	6
CORK	DIBOSON PRODUCTION BY 2-TO-5-GEV/C PIONS. A. R. CLARK, B. CORK, T. ELIOFF, L. T. KERTH, T. N. RANGASWAMY, AND W. A. WENZEL.	45
CORK	MEASUREMENT OF THE (K-PLUS DECAY TO POSITRON + NEUTRINO) (K-PLUS DECAY TO MU-PLUS + NEUTRINO) BRANCHING RATIO. A. R. CLARK, B. CORK, T. ELIOFF, D. KEEFE, L. T. KERTH, J. F. MCREYNOLDS, AND W. A. WENZEL.	45
CORK	TOTAL CROSS SECTIONS AT COSMIC-RAY ENERGIES. B. CORK.	46
CORMACK	COMPARISON OF THE LIFETIMES OF PI-PLUS AND PI-MINUS. D. S. AYRES, D. O. CALDWELL, A. M. CORMACK, V. B. ELINGS, A. J. GREENBERG, W. P. HESSE, R. W. KENNEY, AND R. J. MORRISON.	49

COSMIC	EXPERIMENTATION USING COSMIC RAYS.	27
COSMIC RAY	COSMIC-RAY MUON EXPERIMENT. L. W. ALVAREZ, P. M. DAUBER, S. M FLATTE, L. H. SMITH, M. L. STEVENSON, AND M. A. WAHLIG.	28
COSMIC RAY	HIGH-ALTITUDE PARTICLE PHYSICS AND COSMIC-RAY EXPERIMENTAL FACILITY. L. W. ALVAREZ, P. M. DAUBER, L. J. LLOYD, L. H. SMITH, AND M. A. WAHLIG.	27
COSMIC RAY	TOTAL CROSS SECTIONS AT COSMIC-RAY ENERGIES. B. CORK.	46
COUPLINGS	SELF-CONSISTENT COUPLINGS OF THE 1-MINUS AND 2-PLUS NONETS TO THE ZERO-MINUS MESONS. C. SCHMID AND J. YELLIN.	4
COUPLINGS	SYMMETRIES OF SELF-CONSISTENT TRILINEAR MESON COUPLINGS. C. SCHMID AND J. YELLIN.	5
COYNE	NEW 25-INCH BUBBLE-CHAMBER BEAM. J. A. KADYK, D. G. COYNE, AND W. R. BUTLER.	67
COYNE	PI-PLUS PROTON INTERACTION AT 3.7 GEV/C. W. R. BUTLER, D. G. COYNE, P. GAPOSCHKIN, AND J. MACNAUGHTON.	68
CRAWFORD	DAPR -- FULLY AUTOMATIC EVENT SCANNING AND MEASUREMENT. B. BRITTON, J. CRAWFORD, J. FRANZ, W. S. GEE, D. HALL, N. JONTULOVIC, H. WHITE, AND F. WINDORSKI.	92
CRAWFORD	HAZE -- SEMIAUTOMATIC EVENT MEASUREMENT. S. BUCKMAN, J. CRAWFORD, P. DAVIS, W. S. GEE, J. GREENE, C. OSBORNE, AND L. SHALZ.	91
CRAWFORD	HYPERON PRODUCTION AND DECAY. F. S. CRAWFORD, AND J. C. DOYLE.	17
CRAWFORD	LEPTONIC DECAYS OF ETA MESONS. F. S. CRAWFORD, L. R. PRICE, AND R. A. GROSSMAN.	17
CRAWFORD	PRODUCTION OF ETA MESONS. F. S. CRAWFORD, L. R. PRICE, AND R. A. GROSSMAN.	17
CRAWFORD	RADIATIVE ELECTROPRODUCTION. F. S. CRAWFORD, L. R. PRICE, AND R. A. GROSSMAN.	18
CRAWFORD	RADIATIVE PION PRODUCTION. F. S. CRAWFORD, L. R. PRICE, AND R. A. GROSSMAN.	17
CRAWFORD	STUDY OF THE NEUTRAL K MESON. B. WEBBER, F. S. CRAWFORD, AND M. ALSTON-GARNJOST.	22
CROSS	MEASUREMENT OF THE DIFFERENTIAL CROSS SECTION FOR PI-MINUS GOES TO NEUTRON GAMMA. R. P. HADDOCK, J. A. HELLAND, B. M. K. NEFKENS, A. S. L. PARSONS, P. TRUOEL, L. VERHEY, AND M. E. ZELLER.	39
CROSS	TOTAL CROSS SECTIONS AT COSMIC-RAY ENERGIES. B. CORK.	46
CROWE	EXPERIMENTAL PHYSICS. K. M. CROWE AND D. H. MILLER.	39
CROWE	K-PLUS DECAY ANALYSIS. K. M. CROWE, R. P. HADDOCK, M. E. ZELLER, AND N. T. DAIRIKI.	39
CROWE	PION FORM FACTOR. K. M. CROWE, A. S. L. PARSONS, AND M. A. FAINBERG.	39
CROWE	PION-PION S-WAVE INTERACTION. K. M. CROWE, T. MAUNG, AND N. DAIRIKI.	40
CURRENT	CURRENT ALGEBRA AND LOW-ENERGY MESON-BARYON SCATTERING. P. SHERS.	7
CURRENT	HADRON SUM RULES FROM SU(3) ⊗ SU(3) CURRENT ALGEBRA. R. CHRISTENSEN.	7
CURRENTS	NEUTRAL LEPTONIC CURRENTS. A. R. CLARK, T. ELIOFF, H. J. FRISCH, R. P. JOHNSON, D. KEEFE, L. T. KERTH, D. NEWTON, AND W. A. WENZEL.	45

CUTTS	MEASUREMENT OF THE PI-ZERO ENERGY SPECTRUM IN K-PLUS DECAY TO PI-ZERO MU-PLUS NEUTRINO. P. KIJEWSKI, D. CUTTS, M. DEUTSCH, R. STIENING, AND C. WIEGAND.	59
CUTTS	STUDY OF K-PLUS DECAY TO PI-PLUS PI-ZERO GAMMA. P. KIJEWSKI, D. CUTTS, M. DEUTSCH, R. STIENING, AND C. WIEGAND.	59
CUTTS	STUDY OF THE K-PLUS DECAY TO MU-PLUS NEUTRINO GAMMA. M. CHEN, D. CUTTS, M. DEUTSCH, R. STIENING, AND C. WIEGAND.	60
CYCLOTRON	MODEL OF RADIO-FREQUENCY SYSTEM FOR IMPROVEMENT OF 184-INCH CYCLOTRON. L. KANSTEIN.	105
CYCLOTRON	184-INCH CYCLOTRON REGENERATOR STUDIES. A. C. PAUL.	41
CYCLOTRON	184-INCH CYCLOTRON. J. T. VALE.	105
DAHL	ETA-ZERO DECAY AND PI-ZERO PI-ZERO NEUTRON EXPERIMENTS. T. B. RISSER, R. W. KENNEY, M. PRIPSTEIN, O. DAHL, AND M. A. WAHLIG.	47
DAHL	NEUTRAL DECAY MODES OF THE ETA MESON. O. I. DAHL, M. PRIPSTEIN, AND M. WAHLIG.	26
DAHL	NEUTRAL DIBOSON EXPERIMENT. O. I. DAHL, M. PRIPSTEIN, AND M. WAHLIG.	27
DAHL	PI-PLUS DEUTERON INTERACTIONS FROM 1.1 TO 2.3 GEV/C. M. A. ABOLINS, O. I. DAHL, G. DANBURG, D. DAVIES, AND R. RADER.	23
DAHL	PI-PLUS DEUTERON INTERACTIONS FROM 2.8 TO 4.2 GEV/C. M. A. ABOLINS, O. I. DAHL, AND P. HOCH.	22
DAIRIKI	K-PLUS DECAY ANALYSIS. K. M. CROWE, R. P. HADDOCK, M. E. ZELLER, AND N. T. DAIRIKI.	39
DAIRIKI	PION-PION S-WAVE INTERACTION. K. M. CROWE, T. MAUNG, AND N. DAIRIKI.	40
DANBURG	PI-PLUS DEUTERON INTERACTIONS FROM 1.1 TO 2.3 GEV/C. M. A. ABOLINS, O. I. DAHL, G. DANBURG, D. DAVIES, AND R. RADER.	23
DAPR	DAPR -- FULLY AUTOMATIC EVENT SCANNING AND MEASUREMENT. B. BRITTON, J. CRAWFORD, J. FRANZ, W. S. GEE, D. HALL, N. JONTULOVIC, H. WHITE, AND F. WINDORSKI.	92
DATA-ANALYSIS	DATA-ANALYSIS PROGRAMS.	33
DATA-EDITING	DATA-EDITING PROGRAMS.	33
DATA-PROCESSING	DATA-PROCESSING OPERATIONS.	94
DATA-REDUCTION	DATA-REDUCTION EFFORT.	29
DATA-REDUCTION	DATA-REDUCTION OPERATIONS. E. H. HOEDEMAKER.	29
DATA-REDUCTION	MAY-NOVEMBER 1968 DATA-REDUCTION FORECAST. 1PROGRAMMING EFFORT. B. PARDOE.	32
DAUBER	COSMIC-RAY MUON EXPERIMENT. L. W. ALVAREZ, P. M. DAUBER, S. M FLATTE, L. H. SMITH, M. L. STEVENSON, AND M. A. WAHLIG.	28
DAUBER	HIGH-ALTITUDE PARTICLE PHYSICS AND COSMIC-RAY EXPERIMENTAL FACILITY. L. W. ALVAREZ, P. M. DAUBER, L. J. LLOYD, L. H. SMITH, AND M. A. WAHLIG.	27
DAUBER	PRODUCTION AND DECAY OF CASCADE HYPERONS. P. M. DAUBER AND R. MULLER.	18
DAUBER	STUDY OF THE REACTION K-MINUS PROTON GOES TO SIGMA-PLUSMINUS PI-MINUSPLUS. P. M. DAUBER AND A. BARBARO-GALTIERI.	19

DAUGHTERS	DAUGHTERS, CONSPIRACIES, AND LORENTZ SYMMETRY. K. M. BITAR AND G. L. TINDLE.	5
DAVIES	PI-PLUS DEUTERON INTERACTIONS FROM 1.1 TO 2.3 GEV/C. M. A. ABOLINS, O. I. DAHL, G. DANBURG, D. DAVIES, AND R. RADER.	23
DAVIS	EVENT ACCOUNTING. S. BUCKMAN, P. DAVIS, AND C. OSBORNE.	92
DAVIS	HAZE -- SEMIAUTOMATIC EVENT MEASUREMENT. S. BUCKMAN, J. CRAWFORD, P. DAVIS, W. S. GEE, J. GREENE, C. OSBORNE, AND L. SHALZ.	91
DAVIS	K82 EXPERIMENT. S. M. FLATTE, J. H. FRIEDMAN, A. BARBARO-GALTIERI, M. ALSTON-GARNJOST, G. R. LYNCH, M. S. RABIN, F. T. SOLMITZ, P. DAVIS, AND V. WALUCH.	26
DAVIS	TRIST -- SYSTEM MONITOR. P. DAVIS AND C. OSBORNE.	92
DECAY	DECAY OMEGA GOES TO PI-PLUS PI-MINUS. S. M. FLATTE.	19
DECAY	ETA-ZERO DECAY AND PI-ZERO PI-ZERO NEUTRON EXPERIMENTS. T. B. RISSER, R. W. KENNEY, M. PRIPSTEIN, O. DAHL, AND M. A. WAHLIG.	47
DECAY	HYPERON PRODUCTION AND DECAY. F. S. CRAWFORD, AND J. C. DOYLE.	17
DECAY	K-PLUS DECAY ANALYSIS. K. M. CROWE, R. P. HADDOCK, M. E. ZELLER, AND N. T. DAIRIKI.	39
DECAY	MEASUREMENT OF THE PI-ZERO ENERGY SPECTRUM IN K-PLUS DECAY TO PI-ZERO MU-PLUS NEUTRINO. P. KIJEWSKI, D. CUTTS, M. DEUTSCH, R. STIENING, AND C. WIEGAND.	59
DECAY	MUON POLARIZATION IN K-PLUS DECAY TO PI-ZERO MU-PLUS NEUTRINO (K-MU3-PLUS). M. DEUTSCH, R. STIENING, AND C. WIEGAND.	59
DECAY	NEUTRAL DECAY MODES OF THE ETA MESON. O. I. DAHL, M. PRIPSTEIN, AND M. WAHLIG.	26
DECAY	PRODUCTION AND DECAY OF CASCADE HYPERONS. P. M. DAUBER AND R. MULLER.	18
DECAY	STUDY OF K-PLUS DECAY TO PI-PLUS PI-ZERO GAMMA. P. KIJEWSKI, D. CUTTS, M. DEUTSCH, R. STIENING, AND C. WIEGAND.	59
DECAY	STUDY OF SIGMA DECAY PARAMETERS. R. D. TRIPP, F. T. SOLMITZ, AND R. O. BANGERTER.	20
DECAY	STUDY OF THE K-PLUS DECAY TO MU-PLUS NEUTRINO GAMMA. M. CHEN, D. CUTTS, M. DEUTSCH, R. STIENING, AND C. WIEGAND.	60
DECAYS	CHARGE ASYMMETRY IN K-MU3-ZERO DECAYS. R. J. BUDNITZ, R. L. MCCARTHY, D. H. MILLER, AND W. N. ROSS.	40
DECAYS	ETA LEPTONIC DECAYS. M. CHEN, R. HILDEBRAND, R. STIENING, AND C. WIEGAND.	60
DECAYS	LEPTONIC DECAYS OF ETA MESONS. F. S. CRAWFORD, L. R. PRICE, AND R. A. GROSSMAN.	17
DECAYS	SIGMA INTERACTIONS AND DECAYS. L. K. GERSHWIN.	21
DELTA-PLUSPLUS	REGGE-POLE MODEL WITH THE M = 1 PION IN PI-PLUS PROTON GOES TO RHO-ZERO DELTA-PLUSPLUS AND PI-PLUS PROTON GOES TO RHO-PLUS PROTON. F. ARBAB AND R. C. BROWER.	1
DELTA-PLUSPLUS	STUDY OF THE REACTION PI-PLUS PROTON GOES TO ETA-ZERO DELTA-PLUSPLUS. G. BORREANI, G. GIDAL, AND G. E. KALMUS.	55
DELTAS	NONEXSISTENCE OF KRONECKER DELTAS IN ANGULAR MOMENTUM FOR STRONG PROCESSES. C. I. TAN.	2

DEMPSTER	SYSTEMS PROGRAMMING. E. R. BEALS, W. H. BENSON, J. R. BORGES, D. N. BRAINARD, W. F. DEMPSTER, R. L. FINK, J. E. GLASNER, W. H. HUTCHINSON, J. P. JOHNSON, J. A. KNIGHT, S. J. PENNY, D. F. STEVENS, AND R. E. TRACY.	84
DENSITY	RELATIONS BETWEEN SPIN DENSITY MATRIX ELEMENTS. G. A. RINGLAND AND R. L. THEWS.	6
DESIGN	ACCELERATOR AND MAGNET DESIGN PROGRAMS. R. AHLSTRAND, V. O. BRADY, B. R. BURKHART, E. R. CLOSE, J. S. COLONIAS, R. N. HEALEY, B. S. LEVINE, B. M. POWELL, AND S. J. SACKETT.	80
DESIGN	SYNCHROTRON MAGNET DESIGN.	95
DETAR	MULTI-REGGE UNITARITY. C. DETAR.	1
DETECTORS	TRACK DETECTORS. H. A. WOLLENBERG AND H. W. PATTERSON.	71
DETOUEF	MEASUREMENT OF NEUTRON PROTON GOES TO GAMMA DEUTERON ANGULAR DISTRIBUTION AS A DIRECT TEST OF TIME REVERSAL IN THE ELECTROMAGNETIC INTERACTION. D. CHENG, V. PEREZ-MENDEZ, J. M. SPERINDE, J. A. HELLAND, B. L. SCHROCK, R. P. HADDOCK, J. DETOUEF, M. J. LONGO, S. WILSON, AND K. K. YOUNG.	50
DEUTERIUM	K-MINUS INTERACTIONS IN DEUTERIUM. A. BARBARO-GALTIERI, M. MATISON, AND A. RITTENBERG.	20
DEUTERON	DEUTERON MISSING-MASS EXPERIMENT. M. A. ABOLINS, G. S. SMITH, L. H. SMITH, AND A. B. WICKLUND.	27
DEUTERON	K-MINUS DEUTERON AND K-MINUS NEUTRON ELASTIC SCATTERING. G. E. KALMUS AND N. JEW.	54
DEUTERON	K-PLUS DEUTERON INTERACTION FROM 800 TO 1600 MEV/C. R. BLAND, A. A. HIRATA, G. GOLDHABER, V. H. SEEGER, G. H. TRILLING, AND C. G. WOHL.	68
DEUTERON	MEASUREMENT OF NEUTRON PROTON GOES TO GAMMA DEUTERON ANGULAR DISTRIBUTION AS A DIRECT TEST OF TIME REVERSAL IN THE ELECTROMAGNETIC INTERACTION. D. CHENG, V. PEREZ-MENDEZ, J. M. SPERINDE, J. A. HELLAND, B. L. SCHROCK, R. P. HADDOCK, J. DETOUEF, M. J. LONGO, S. WILSON, AND K. K. YOUNG.	50
DEUTERON	PI-PLUS DEUTERON INTERACTIONS FROM 1.1 TO 2.3 GEV/C. M. A. ABOLINS, O. I. DAHL, G. DANBURG, D. DAVIES, AND R. RADER.	23
DEUTERON	PI-PLUS DEUTERON INTERACTIONS FROM 2.8 TO 4.2 GEV/C. M. A. ABOLINS, O. I. DAHL, AND P. HOCH.	22
DEUTERON	REGGE-POLE FORMALISM FOR PIONIC DISINTEGRATION OF THE DEUTERON. H. LEE.	8
DEUTERON	SEARCH FOR A 2PI-ZERO RESONANCE NEAR 730 MEV IN PI-PLUS DEUTERON INTERACTIONS. R. J. MANNING AND G. A. SMITH.	23
DEUTSCH	MEASUREMENT OF THE PI-ZERO ENERGY SPECTRUM IN K-PLUS DECAY TO PI-ZERO MU-PLUS NEUTRINO. P. KIJEWSKI, D. CUTTS, M. DEUTSCH, R. STIENING, AND C. WIEGAND.	59
DEUTSCH	MUON POLARIZATION IN K-PLUS DECAY TO PI-ZERO MU-PLUS NEUTRINO (K-MU3-PLUS). M. DEUTSCH, R. STIENING, AND C. WIEGAND.	59
DEUTSCH	STUDY OF K-PLUS DECAY TO PI-PLUS PI-ZERO GAMMA. P. KIJEWSKI, D. CUTTS, M. DEUTSCH, R. STIENING, AND C. WIEGAND.	59
DEUTSCH	STUDY OF THE K-PLUS DECAY TO MU-PLUS NEUTRINO GAMMA. M. CHEN, D. CUTTS, M. DEUTSCH, R. STIENING, AND C. WIEGAND.	60
DIBOSON	DIBOSON PRODUCTION BY 2-TO-5-GEV/C PIONS. A. R. CLARK, B. CORK, T. ELIOFF, L. T. KERTH, T. N. RANGASWAMY, AND W. A. WENZEL.	45

DIBOSON	NEUTRAL DIBOSON EXPERIMENT. O. I. DAHL, M. PRIPSTEIN, AND M. WAHLIG.	27
DIEBOLD	PHOTOPRODUCTION OF VECTOR MESONS. L. KAUFMAN, V. PEREZ-MENDEZ, A. W. STETZ, S. H. WILLIAMS, A. BOYARSKI, F. BULOS, R. DIEBOLD, R. LARSEN, D. LEITH, B. RICHTER, AND W. BUSZA.	50
DIFFERENTIAL	HIGH-ORDER RESONANCE FOR DUFFING'S DIFFERENTIAL EQUATION.	87
DIFFERENTIAL	MEASUREMENT OF THE DIFFERENTIAL CROSS SECTION FOR PI-MINUS GOES TO NEUTRON GAMMA. R. P. HADDOCK, J. A. HELLAND, B. M. K. NEFKENS, A. S. L. PARSONS, P. TRUOEL, L. VERHEY, AND M. E. ZELLER.	39
DISINTEGRATION	REGGE-POLE FORMALISM FOR PIONIC DISINTEGRATION OF THE DEUTERON. H. LEE.	8
DISPLAY	FAIR -- DATA DISPLAY. D. CHRISLER AND L. SHALZ.	92
DOSE	ANALYSIS OF ERRORS IN THE EVALUATION OF FLUX AND DOSE. A. RINDI.	72
DOSIMETRIC	DOSIMETRIC CALCULATIONS. G. M. LITTON, P. G. STEWARD, AND R. W. WALLACE.	71
DOYLE	HYPERON PRODUCTION AND DECAY. F. S. CRAWFORD, AND J. C. DOYLE.	17
DROP	EQUILIBRIUM CONFIGURATIONS OF A CHARGED CONDUCTING DROP. W. J. SWIATECKI AND C. F. TSANG.	10
DUFFING'S	HIGH-ORDER RESONANCE FOR DUFFING'S DIFFERENTIAL EQUATION.	87
D66	D66 EXPERIMENT. P. EBERHARD, G. R. LYNCH, AND M. PRIPSTEIN.	24
EBERHARD	D66 EXPERIMENT. P. EBERHARD, G. R. LYNCH, AND M. PRIPSTEIN.	24
EBERHARD	FLUX AMPLIFIER. P. EBERHARD AND R. ROSS.	29
EBERHARD	PRODUCTION OF SIGMAS IN K-MINUS PROTON INTERACTIONS. M. PRIPSTEIN AND P. EBERHARD.	19
ECKMAN	25-INCH HYDROGEN BUBBLE CHAMBER. W. M. POWELL AND G. J. ECKMAN.	53
EFFORT	DATA-REDUCTION EFFORT.	29
EFFORT	MAY-NOVEMBER 1968 DATA-REDUCTION FORECAST. 1PROGRAMMING EFFORT. B. PARDOE.	32
ELASTIC	CHARGE-EXCHANGE (K-MINUS PROTON GOES TO ANTIK-ZERO NEUTRON) AND ELASTIC (K-MINUS PROTON GOES TO K-MINUS PROTON) REACTIONS. T. S. MAST, R. BANGERTER, A. BARBARO-GALTIERI, AND R. D. TRIPP.	22
ELASTIC	K-MINUS DEUTERON AND K-MINUS NEUTRON ELASTIC SCATTERING. G. E. KALMUS AND N. JEW.	54
ELASTIC SCATTERING	POLARIZATION IN PI-PLUS PROTON AND PI-MINUS PROTON ELASTIC SCATTERING FROM 250 TO 410 MEV. W. GORN, C. C. MOREHOUSE, T. M. POWELL, P. R. ROBRISH, S. ROCK, S. SHANNON, H. STEINER, AND H. WEISBERG.	61
ELASTIC SCATTERING	PHASE-SHIFT ANALYSIS OF CHARGED-PION PROTON ELASTIC-SCATTERING EXPERIMENTS. C. H. JOHNSON, JR., O. CHAMBERLAIN, R. FIELD, AND H. STEINER.	62
ELECTROMAGNETIC	ANALYSIS OF PI-HE SCATTERING FOR THE PION ELECTROMAGNETIC FORM FACTOR. C. T. MOTTERSHEAD.	9
ELECTROMAGNETIC	MEASUREMENT OF NEUTRON PROTON GOES TO GAMMA DEUTERON ANGULAR DISTRIBUTION AS A DIRECT TEST OF TIME REVERSAL IN THE ELECTROMAGNETIC INTERACTION. D. CHENG, V. PEREZ-MENDEZ, J. M. SPERINDE, J. A. HELLAND, B. L. SCHROCK, R. P. HADDOCK, J. DETOUEF, M. J. LONGO, S. WILSON, AND K. K. YOUNG.	50

ELECTRON	ELECTRON RING ACCELERATOR.	99
ELECTRON	SEARCH FOR T VIOLATION IN INELASTIC ELECTRON-PROTON SCATTERING. O. CHAMBERLAIN, G. SHAPIRO, H. L. WEISBERG, P. R. ROBRISH, S. ROCK, S. SHANNON, R. TAYLOR, L. MO, E. BLOOM, J. LITT, H. KENDALL, AND J. FRIEDMAN.	62
ELECTRONIC	WIRE SPARK CHAMBERS AND ELECTRONIC READOUTS. R. L. GROVE, G. L. STOKER, AND V. PEREZ-MENDEZ.	51
ELECTROPRODUCTION	RADIATIVE ELECTROPRODUCTION. F. S. CRAWFORD, L. R. PRICE, AND R. A. GROSSMAN.	18
ELEMENTS	RELATIONS BETWEEN SPIN DENSITY MATRIX ELEMENTS. G. A. RINGLAND AND R. L. THEWS.	6
ELINGS	COMPARISON OF THE LIFETIMES OF PI-PLUS AND PI-MINUS. D. S. AYRES, D. O. CALDWELL, A. M. CORMACK, V. B. ELINGS, A. J. GREENBERG, W. P. HESSE, R. W. KENNEY, AND R. J. MORRISON.	49
ELIOFF	DIBOSON PRODUCTION BY 2-TO-5-GEV/C PIONS. A. R. CLARK, B. CORK, T. ELIOFF, L. T. KERTH, T. N. RANGASWAMY, AND W. A. WENZEL.	45
ELIOFF	MEASUREMENT OF THE (K-PLUS DECAY TO POSITRON + NEUTRINO) (K-PLUS DECAY TO MU-PLUS + NEUTRINO) BRANCHING RATIO. A. R. CLARK, B. CORK, T. ELIOFF, D. KEEFE, L. T. KERTH, J. F. MCREYNOLDS, AND W. A. WENZEL.	45
ELIOFF	NEUTRAL LEPTONIC CURRENTS. A. R. CLARK, T. ELIOFF, H. J. FRISCH, R. P. JOHNSON, D. KEEFE, L. T. KERTH, D. NEWTON, AND W. A. WENZEL.	45
ELY	K-MINUS PROTON GOES TO LAMBDA-ZERO PI-ZERO. R. P. ELY AND J. LOUIE.	53
ENERGIES	TOTAL CROSS SECTIONS AT COSMIC-RAY ENERGIES. B. CORK.	46
ENERGY	MEASUREMENT OF THE PI-ZERO ENERGY SPECTRUM IN K-PLUS DECAY TO PI-ZERO MU-PLUS NEUTRINO. P. KIJEWSKI, D. CUTTS, M. DEUTSCH, R. STIENING, AND C. WIEGAND.	59
EQUATION	BOLTZMANN EQUATION FOR POLYATOMIC GAS. W. WOLLMAN.	12
EQUATION	BOOTSTRAP SOLUTIONS OF THE BETHE-SALPETER EQUATION. W. B. KAUFMANN.	7
EQUATION	HIGH-ORDER RESONANCE FOR DUFFING'S DIFFERENTIAL EQUATION.	87
EQUATION	TWO-CHANNEL CALCULATIONS WITH THE BETHE-SALPETER EQUATION. W. B. KAUFMANN.	7
EQUATIONS	COMPUTATIONS CONCERNING NONLINEAR, AREA-PRESERVING ALGEBRAIC EQUATIONS. L. J. LASLETT.	12
EQUATIONS	N-BODY FADDEEV EQUATIONS AND THE CLUSTER EXPANSION. W. BIERTER.	12
EQUILIBRIUM	EQUILIBRIUM CONFIGURATIONS OF A CHARGED CONDUCTING DROP. W. J. SWIATECKI AND C. F. TSANG.	10
ETA	ETA LEPTONIC DECAYS. M. CHEN, R. HILDEBRAND, R. STIENING, AND C. WIEGAND.	60
ETA	LEPTONIC DECAYS OF ETA MESONS. F. S. CRAWFORD, L. R. PRICE, AND R. A. GROSSMAN.	17
ETA	NEUTRAL DECAY MODES OF THE ETA MESON. O. I. DAHL, M. PRIPSTEIN, AND M. WAHLIG.	26
ETA	PRODUCTION OF ETA MESONS. F. S. CRAWFORD, L. R. PRICE, AND R. A. GROSSMAN.	17
ETA-ZERO	ETA-ZERO DECAY AND PI-ZERO PI-ZERO NEUTRON EXPERIMENTS. T. B. RISSER, R. W. KENNEY, M. PRIPSTEIN, O. DAHL, AND M. A. WAHLIG.	47

ETA-ZERO	STUDY OF THE REACTION PI-PLUS PROTON GOES TO ETA-ZERO DELTA-PLUSPLUS. G. BORREANI, G. GIDAL, AND G. E. KALMUS.	55
ETIOLOGY	ETIOLOGY OF LEUKEMIA.	87
EVEN-EVEN	GROUND-STATE MASSES OF EVEN-EVEN NUCLEI. C. F. TSANG.	10
EVENT	DAPR -- FULLY AUTOMATIC EVENT SCANNING AND MEASUREMENT. B. BRITTON, J. CRAWFORD, J. FRANZ, W. S. GEE, D. HALL, N. JONTULOVIC, H. WHITE, AND F. WINDORSKI.	92
EVENT	EVENT ACCOUNTING. S. BUCKMAN, P. DAVIS, AND C. OSBORNE.	92
EVENT	HAZE -- SEMIAUTOMATIC EVENT MEASUREMENT. S. BUCKMAN, J. CRAWFORD, P. DAVIS, W. S. GEE, J. GREENE, C. OSBORNE, AND L. SHALZ.	91
EVENTS	TWO-PION EVENTS IN PI-PLUS PROTON FILM AT 1.35, 1.43, AND 1.68 GEV/C. R. W. BIRGE AND G. E. KALMUS.	55
EVOLUTION	QUASILINEAR EVOLUTION OF THE WEIBEL-KAHN INSTABILITY. N. ALBRIGHT.	11
EXCHANGE	PION EXCHANGE AND FACTORIZATION. G. A. RINGLAND AND R. L. THEWS.	3
EXPANSION	N-BODY FADDEEV EQUATIONS AND THE CLUSTER EXPANSION. W. BIERTER.	12
EXPANSION	NEW ASYMPTOTIC EXPANSION OF THE S-MATRIX. G. L. TINDLE.	6
EXPERIMENTATION	EXPERIMENTATION USING COSMIC RAYS.	27
FACILITY	HIGH-ALTITUDE PARTICLE PHYSICS AND COSMIC-RAY EXPERIMENTAL FACILITY. L. W. ALVAREZ, P. M. DAUBER, L. J. LLOYD, L. H. SMITH, AND M. A. WAHLIG.	27
FACTORIZATION	FACTORIZATION, KINEMATIC SINGULARITIES, AND CONSPIRACIES. F. ARBAB AND J. D. JACKSON.	2
FACTORIZATION	PION EXCHANGE AND FACTORIZATION. G. A. RINGLAND AND R. L. THEWS.	3
FADDEEV	N-BODY FADDEEV EQUATIONS AND THE CLUSTER EXPANSION. W. BIERTER.	12
FAINBERG	PION FORM FACTOR. K. M. CROWE, A. S. L. PARSONS, AND M. A. FAINBERG.	39
FAIR	FAIR -- DATA DISPLAY. D. CHRISLER AND L. SHALZ.	92
FANG	LAMBDA-ZERO PROTON INTERACTIONS. J. A. KADYK, G. H. TRILLING, P. GAPOSCHKIN, G. ALEXANDER, R. A. HESS, S. R. G. FANG, AND F. M. HAMZEH.	67
FERROKINETICS	HUMAN FERROKINETICS.	87
FILM	TWO-PION EVENTS IN PI-PLUS PROTON FILM AT 1.35, 1.43, AND 1.68 GEV/C. R. W. BIRGE AND G. E. KALMUS.	55
FINITE WIDTHS	FINITE WIDTHS AND ANGULAR DISTRIBUTIONS. G. A. RINGLAND AND R. L. THEWS.	6
FINITE-ENERGY	FINITE-ENERGY SUM RULES FOR BACKWARD PION-NUCLEON SCATTERING. H. LEE.	4
FINITE-ENERGY	SELF-CONSISTENT SYMMETRY PROPERTIES OF FINITE-ENERGY SUM RULES. C. SCHMID AND J. YELLIN WITH J. SHAPIRO AND K. BITAR.	5
FINITE-ENERGY	UNITARITY AND FINITE-ENERGY SUM RULES. F. ARBAB.	4
FINK	SYSTEMS PROGRAMMING. E. R. BEALS, W. H. BENSON, J. R. BORGES, D. N. BRAINARD, W. F. DEMPSTER, R. L. FINK, J. E. GLASNER, W. H. HUTCHINSON, J. P. JOHNSON, J. A. KNIGHT, S. J. PENNY, D. F. STEVENS, AND R. E. TRACY.	84

FIRESTONE	K-PLUS PROTON INTERACTIONS AT 9 GEV/C. G. ALEXANDER, A. FIRESTONE, C. M. FU, AND G. GOLDHABER.	69
FISSION-NEUTRON	GRAPHICAL TECHNIQUE FOR ESTIMATING ACTIVITY LEVELS PRODUCED IN THERMAL-NEUTRON AND FISSION-NEUTRON IRRADIATION. J. T. ROUTTI.	72
FLATTE	COSMIC-RAY MUON EXPERIMENT. L. W. ALVAREZ, P. M. DAUBER, S. M FLATTE, L. H. SMITH, M. L. STEVENSON, AND M. A. WAHLIG.	28
FLATTE	DECAY OMEGA GOES TO PI-PLUS PI-MINUS. S. M. FLATTE.	19
FLATTE	K82 EXPERIMENT. S. M. FLATTE, J. H. FRIEDMAN, A. BARBARO-GALTIERI, M. ALSTON-GARNJOST, G. R. LYNCH, M. S. RABIN, F. T. SOLMITZ, P. DAVIS, AND V. WALUCH.	26
FLATTE	REACTIONS K-MINUS PROTON GOES TO ANTIK-ZERO NEUTRON AND K-MINUS PROTON GOES TO LAMBDA PI-ZERO. S. M. FLATTE, A. BARBARO-GALTIERI, R. D. TRIPP, AND C. G. WOHL.	19
FLUX	ANALYSIS OF ERRORS IN THE EVALUATION OF FLUX AND DOSE. A. RINDI.	72
FLUX	FLUX AMPLIFIER. P. EBERHARD AND R. ROSS.	29
FOG	FOG -- GEOMETRY AND SPACE RECONSTRUCTION. S. BUCKMAN, J. FRANZ, AND F. WINDORSKI.	91
FORECAST	MAY-NOVEMBER 1968 DATA-REDUCTION FORECAST. 1PROGRAMMING EFFORT. B. PARDOE.	32
FORM FACTOR	PION FORM FACTOR. K. M. CROWE, A. S. L. PARSONS, AND M. A. FAINBERG.	39
FORM FACTOR	ANALYSIS OF PI-HE SCATTERING FOR THE PION ELECTROMAGNETIC FORM FACTOR. C. T. MOTTERSHEAD.	9
FORMALISM	REGGE-POLE FORMALISM FOR PIONIC DISINTEGRATION OF THE DEUTERON. H. LEE.	8
FOUR-PRONGED	STUDY OF K-MINUS PROTON FOUR-PRONGED REACTIONS. J. H. FRIEDMAN, R. R. ROSS, AND A. KIRSCHBAUM.	20
FRANZ	DAPR -- FULLY AUTOMATIC EVENT SCANNING AND MEASUREMENT. B. BRITTON, J. CRAWFORD, J. FRANZ, W. S. GEE, D. HALL, N. JONTULOVIC, H. WHITE, AND F. WINDORSKI.	92
FRANZ	FOG -- GEOMETRY AND SPACE RECONSTRUCTION. S. BUCKMAN, J. FRANZ, AND F. WINDORSKI.	91
FRIEDMAN	K82 EXPERIMENT. S. M. FLATTE, J. H. FRIEDMAN, A. BARBARO-GALTIERI, M. ALSTON-GARNJOST, G. R. LYNCH, M. S. RABIN, F. T. SOLMITZ, P. DAVIS, AND V. WALUCH.	26
FRIEDMAN	REACTION K-MINUS PROTON GOES TO K-STAR-SUB-HALF(892) K-STAR-SUB-THREEHALVES(1238). J. H. FRIEDMAN AND R. R. ROSS.	19
FRIEDMAN	SEARCH FOR T VIOLATION IN INELASTIC ELECTRON-PROTON SCATTERING. O. CHAMBERLAIN, G. SHAPIRO, H. L. WEISBERG, P. R. ROBRISH, S. ROCK, S. SHANNON, R. TAYLOR, L. MO, E. BLOOM, J. LITT, H. KENDALL, AND J. FRIEDMAN.	62
FRIEDMAN	STUDY OF K-MINUS PROTON FOUR-PRONGED REACTIONS. J. H. FRIEDMAN, R. R. ROSS, AND A. KIRSCHBAUM.	20
FRISCH	NEUTRAL LEPTONIC CURRENTS. A. R. CLARK, T. ELIOFF, H. J. FRISCH, R. P. JOHNSON, D. KEEFE, L. T. KERTH, D. NEWTON, AND W. A. WENZEL.	45
FU	K-PLUS PROTON INTERACTIONS AT 9 GEV/C. G. ALEXANDER, A. FIRESTONE, C. M. FU, AND G. GOLDHABER.	69
GAGE	NUCLEON-NUCLEON INTERACTIONS. W. CHINOWSKY, P. SCHMIDT, W. GAGE, AND S. KLEIN.	60

GAGE	PI-MINUS PROTON INTERACTION AT 550 MEV/C. W. CHINOWSKY, P. SCHMIDT, AND W. GAGE.	61
GAMMA	MEASUREMENT OF NEUTRON PROTON GOES TO GAMMA DEUTERON ANGULAR DISTRIBUTION AS A DIRECT TEST OF TIME REVERSAL IN THE ELECTROMAGNETIC INTERACTION. D. CHENG, V. PEREZ-MENDEZ, J. M. SPERINDE, J. A. HELLAND, B. L. SCHROCK, R. P. HADDOCK, J. DETOUEF, M. J. LONGO, S. WILSON, AND K. K. YOUNG.	50
GAMMA	MEASUREMENT OF THE DIFFERENTIAL CROSS SECTION FOR PI-MINUS GOES TO NEUTRON GAMMA. R. P. HADDOCK, J. A. HELLAND, B. M. K. NEFKENS, A. S. L. PARSONS, P. TRUOEL, L. VERHEY, AND M. E. ZELLER.	39
GAMMA	STUDY OF K-PLUS DECAY TO PI-PLUS PI-ZERO GAMMA. P. KIJEWSKI, D. CUTTS, M. DEUTSCH, R. STIENING, AND C. WIEGAND.	59
GAMMA	STUDY OF THE K-PLUS DECAY TO MU-PLUS NEUTRINO GAMMA. M. CHEN, D. CUTTS, M. DEUTSCH, R. STIENING, AND C. WIEGAND.	60
GAMMA RAY	PHOTOPEAK ANALYSIS OF SEMICONDUCTOR GAMMA-RAY SPECTRA BY COMPUTER. J. T. ROUTTI AND S. G. PRUSSIN.	72
GAPOSCHKIN	LAMBDA-ZERO PROTON INTERACTIONS. J. A. KADYK, G. H. TRILLING, P. GAPOSCHKIN, G. ALEXANDER, R. A. HESS, S. R. G. FANG, AND F. M. HAMZEH.	67
GAPOSCHKIN	PI-PLUS PROTON INTERACTION AT 3.7 GEV/C. W. R. BUTLER, D. G. COYNE, P. GAPOSCHKIN, AND J. MACNAUGHTON.	68
GAS	BOLTZMANN EQUATION FOR POLYATOMIC GAS. W. WOLLMAN.	12
GAULD	K-E4 EXPERIMENT. B. GAULD, V. PEREZ-MENDEZ, R. CENCE, B. D. JONES, R. MORGADO, M. PETERS, AND V. Z. PETERSON.	49
GEE	DAPR -- FULLY AUTOMATIC EVENT SCANNING AND MEASUREMENT. B. BRITTON, J. CRAWFORD, J. FRANZ, W. S. GEE, D. HALL, N. JONTULOVIC, H. WHITE, AND F. WINDORSKI.	92
GEE	HAZE -- SEMIAUTOMATIC EVENT MEASUREMENT. S. BUCKMAN, J. CRAWFORD, P. DAVIS, W. S. GEE, J. GREENE, C. OSBORNE, AND L. SHALZ.	91
GELLERT	NONSTRANGE INTERACTIONS IN PROTON-PROTON COLLISIONS AT 6.6 GEV/C. E. GELLERT AND G. A. SMITH.	24
GEOMETRY	FOG -- GEOMETRY AND SPACE RECONSTRUCTION. S. BUCKMAN, J. FRANZ, AND F. WINDORSKI.	91
GERSHWIN	SIGMA INTERACTIONS AND DECAYS. L. K. GERSHWIN.	21
GERSHWIN	SIGMA-PLUS MAGNETIC MOMENT. T. S. MAST AND L. K. GERSHWIN.	21
GEV/C	K-PLUS PROTON INTERACTIONS AT 9 GEV/C. G. ALEXANDER, A. FIRESTONE, C. M. FU, AND G. GOLDHABER.	69
GEV/C	NONSTRANGE INTERACTIONS IN PROTON-PROTON COLLISIONS AT 6.6 GEV/C. E. GELLERT AND G. A. SMITH.	24
GEV/C	PI-PLUS DEUTERON INTERACTIONS FROM 1.1 TO 2.3 GEV/C. M. A. ABOLINS, O. I. DAHL, G. DANBURG, D. DAVIES, AND R. RADER.	23
GEV/C	PI-PLUS DEUTERON INTERACTIONS FROM 2.8 TO 4.2 GEV/C. M. A. ABOLINS, O. I. DAHL, AND P. HOCH.	22
GEV/C	PI-PLUS PROTON INTERACTIONS FROM 2.9 TO 4.1 GEV/C. D. G. BROWN, R. W. BIRGE, G. GIDAL, AND G. BORREANI.	54
GEV/C	PI-PLUS PROTON INTERACTION AT 3.7 GEV/C. W. R. BUTLER, D. G. COYNE, P. GAPOSCHKIN, AND J. MACNAUGHTON.	68
GEV/C	STRANGE-PARTICLE INTERACTIONS IN PROTON-PROTON COLLISIONS AT 5.5 AND 6.6 GEV/C. A. B. WICKLUND AND G. A. SMITH.	25

GEV/C	STUDY OF THE STRANGE-PARTICLE CHANNELS IN PI-PLUS PROTON AT 1.34, 1.43, AND 1.68 GEV/C. G. BORREANI AND G. E. KALMUS.	55
GEV/C	TWO-PION EVENTS IN PI-PLUS PROTON FILM AT 1.35, 1.43, AND 1.68 GEV/C. R. W. BIRGE AND G. E. KALMUS.	55
GIDAL	PI-PLUS PROTON INTERACTIONS FROM 2.9 TO 4.1 GEV/C. D. G. BROWN, R. W. BIRGE, G. GIDAL, AND G. BORREANI.	54
GIDAL	STUDY OF THE REACTION PI-PLUS PROTON GOES TO ETA-ZERO DELTA-PLUSPLUS. G. BORREANI, G. GIDAL, AND G. E. KALMUS.	55
GLASNER	SYSTEMS PROGRAMMING. E. R. BEALS, W. H. BENSON, J. R. BORGES, D. N. BRAINARD, W. F. DEMPSTER, R. L. FINK, J. E. GLASNER, W. H. HUTCHINSON, J. P. JOHNSON, J. A. KNIGHT, S. J. PENNY, D. F. STEVENS, AND R. E. TRACY.	84
GOLDHABER	EXPERIMENTAL PHYSICS. G. H. TRILLING AND G. GOLDHABER.	67
GOLDHABER	K-PLUS DEUTERON INTERACTION FROM 800 TO 1600 MEV/C. R. BLAND, A. A. HIRATA, G. GOLDHABER, V. H. SEEGER, G. H. TRILLING, AND C. G. WOHL.	68
GOLDHABER	K-PLUS PROTON INTERACTIONS AT 9 GEV/C. G. ALEXANDER, A. FIRESTONE, C. M. FU, AND G. GOLDHABER.	69
GOLDHABER	PUBLICATIONS -- TRILLING-GOLDHABER.	70
GORN	POLARIZATION IN PI-PLUS PROTON AND PI-MINUS PROTON ELASTIC SCATTERING FROM 250 TO 410 MEV. W. GORN, C. C. MOREHOUSE, T. M. POWELL, P. R. ROBRISH, S. ROCK, S. SHANNON, H. STEINER, AND H. WEISBERG.	61
GORN	POLARIZED-PROTON TARGET IMPROVEMENTS. O. CHAMBERLAIN, W. GORN, C. MOREHOUSE, T. POWELL, P. ROBRISH, S. ROCK, S. SHANNON, G. SHAPIRO, AND H. WEISBERG.	63
GRAPHICAL	GRAPHICAL TECHNIQUE FOR ESTIMATING ACTIVITY LEVELS PRODUCED IN THERMAL-NEUTRON AND FISSION-NEUTRON IRRADIATION. J. T. ROUTTI.	72
GREENBERG	COMPARISON OF THE LIFETIMES OF PI-PLUS AND PI-MINUS. D. S. AYRES, D. O. CALDWELL, A. M. CORMACK, V. B. ELINGS, A. J. GREENBERG, W. P. HESSE, R. W. KENNEY, AND R. J. MORRISON.	49
GREENE	HAZE -- SEMIAUTOMATIC EVENT MEASUREMENT. S. BUCKMAN, J. CRAWFORD, P. DAVIS, W. S. GEE, J. GREENE, C. OSBORNE, AND L. SHALZ.	91
GREINER	PARTICLE IDENTIFIER. D. GREINER, R. ALBERT, AND H. HECKMAN.	43
GRIN	PIONIC ATOMS. R. KUNSELMAN AND G. A. GRIN.	61
GROSSMAN	LEPTONIC DECAYS OF ETA MESONS. F. S. CRAWFORD, L. R. PRICE, AND R. A. GROSSMAN.	17
GROSSMAN	PRODUCTION OF ETA MESONS. F. S. CRAWFORD, L. R. PRICE, AND R. A. GROSSMAN.	17
GROSSMAN	RADIATIVE ELECTROPRODUCTION. F. S. CRAWFORD, L. R. PRICE, AND R. A. GROSSMAN.	18
GROSSMAN	RADIATIVE PION PRODUCTION. F. S. CRAWFORD, L. R. PRICE, AND R. A. GROSSMAN.	17
GROUND STATE	GROUND-STATE MASSES OF EVEN-EVEN NUCLEI. C. F. TSANG.	10
GROVE	WIRE SPARK CHAMBERS AND ELECTRONIC READOUTS. R. L. GROVE, G. L. STOKER, AND V. PEREZ-MENDEZ.	51
HADDOCK	K-PLUS DECAY ANALYSIS. K. M. CROWE, R. P. HADDOCK, M. E. ZELLER, AND N. T. DAIRIKI.	39

HADDOCK	MEASUREMENT OF NEUTRON PROTON GOES TO GAMMA DEUTERON ANGULAR DISTRIBUTION AS A DIRECT TEST OF TIME REVERSAL IN THE ELECTROMAGNETIC INTERACTION. D. CHENG, V. PEREZ-MENDEZ, J. M. SPERINDE, J. A. HELLAND, B. L. SCHROCK, R. P. HADDOCK, J. DETOUEF, M. J. LONGO, S. WILSON, AND K. K. YOUNG.	50
HADDOCK	MEASUREMENT OF THE DIFFERENTIAL CROSS SECTION FOR PI-MINUS GOES TO NEUTRON GAMMA. R. P. HADDOCK, J. A. HELLAND, B. M. K. NEFKENS, A. S. L. PARSONS, P. TRUOEL, L. VERHEY, AND M. E. ZELLER.	39
HADRON	HADRON SUM RULES FROM SU(3) ⊗ SU(3) CURRENT ALGEBRA. R. CHRISTENSEN.	7
HALL	DAPR -- FULLY AUTOMATIC EVENT SCANNING AND MEASUREMENT. B. BRITTON, J. CRAWFORD, J. FRANZ, W. S. GEE, D. HALL, N. JONTULOVIC, H. WHITE, AND F. WINDORSKI.	92
HALL	PROGRAMMING FOR TRILLING-GOLDHABER GROUP. D. ARMSTRONG, E. R. BURNS, B. H. HALL, D. P. LAMB, AND J. G. MILLER.	77
HAMZEH	LAMBDA-ZERO PROTON INTERACTIONS. J. A. KADYK, G. H. TRILLING, P. GAPOSCHKIN, G. ALEXANDER, R. A. HESS, S. R. G. FANG, AND F. M. HAMZEH.	67
HANDLING	DATA HANDLING. H. S. WHITE.	91
HANERFELD	PROGRAMMING FOR POWELL-BIRGE GROUP. H. C. ALBRECHT, H. HANERFELD, M. H. MYERS, J. TYSON, AND J. VISSER,	75
HANERFELD	RESEARCH IN MATHEMATICS AND COMPUTING SCIENCES. W. H. BENSON, P. CONCUS, H. HANERFELD, D. W. JENSON, L. P. MEISSNER, G. C. NOONEY, AND L. S. VARDAS.	85
HAZE	HAZE -- SEMIAUTOMATIC EVENT MEASUREMENT. S. BUCKMAN, J. CRAWFORD, P. DAVIS, W. S. GEE, J. GREENE, C. OSBORNE, AND L. SHALZ.	91
HEALEY	ACCELERATOR AND MAGNET DESIGN PROGRAMS. R. AHLSTRAND, V. O. BRADY, B. R. BURKHART, E. R. CLOSE, J. S. COLONIAS, R. N. HEALEY, B. S. LEVINE, B. M. POWELL, AND S. J. SACKETT.	80
HEALTH	HEALTH PHYSICS. H. W. PATTERSON.	71
HEAT	HEAT TRANSFER THROUGH A THIN ROTATING NUCLEAR TARGET.	86
HEAVY-ION	HEAVY-ION STUDIES PROGRAMS.	79
HECKMAN	HIGH-ENERGY NEUTRON SPECTRUM MEASUREMENTS. H. H. HECKMAN AND H. W. PATTERSON.	44
HECKMAN	NUCLEAR-EMULSION GROUP. H. H. HECKMAN.	43
HECKMAN	PARTICLE IDENTIFIER. D. GREINER, R. ALBERT, AND H. HECKMAN.	43
HECKMAN	PUBLICATIONS -- HECKMAN.	44
HECKMAN	STOPPING-POWER DIFFERENCES OF CHARGED PI MESONS. H. H. HECKMAN.	44
HECKMAN	TEMPORAL CHANGES IN THE INNER-BELT PROTONS. H. H. HECKMAN AND G. H. NAKANO.	43
HELLAND	MEASUREMENT OF NEUTRON PROTON GOES TO GAMMA DEUTERON ANGULAR DISTRIBUTION AS A DIRECT TEST OF TIME REVERSAL IN THE ELECTROMAGNETIC INTERACTION. D. CHENG, V. PEREZ-MENDEZ, J. M. SPERINDE, J. A. HELLAND, B. L. SCHROCK, R. P. HADDOCK, J. DETOUEF, M. J. LONGO, S. WILSON, AND K. K. YOUNG.	50
HELLAND	MEASUREMENT OF THE DIFFERENTIAL CROSS SECTION FOR PI-MINUS GOES TO NEUTRON GAMMA. R. P. HADDOCK, J. A. HELLAND, B. M. K. NEFKENS, A. S. L. PARSONS, P. TRUOEL, L. VERHEY, AND M. E. ZELLER.	39

HELMHOLZ	EXPERIMENTAL PHYSICS RESEARCH. B. J. MOYER AND A. C. HELMHOLZ.	47
HELMHOLZ	K-L-ZERO GOES TO 2 PI-ZERO. A. C. HELMHOLZ, R. W. KENNEY, I. R. LINSCOTT, B. J. MOYER, W. P. OLIVER, S. I. PARKER, C. A. REY, R. J. CENCE, B. D. JONES, V. Z. PETERSON, AND V. J. STENGER.	47
HELMHOLZ	PROGRAM IN COLLABORATION WITH MOYER-HELMHOLZ GROUP.	26
HELMHOLZ	PUBLICATIONS -- MOYER-HELMHOLZ.	52
HERNDON	LRL-SLAC EXPERIMENT ON PI-MINUS PROTON INELASTIC REACTIONS. L. R. PRICE, A. H. ROSENFELD, P. SÖDING, D. HERNDON, R. LONGACRE, D. LEITH, A. BRODY, AND B. SHEN.	25
HESS	LAMBDA-ZERO PROTON INTERACTIONS. J. A. KADYK, G. H. TRILLING, P. GAPOSCHKIN, G. ALEXANDER, R. A. HESS, S. R. G. FANG, AND F. M. HAMZEH.	67
HESSE	COMPARISON OF THE LIFETIMES OF PI-PLUS AND PI-MINUS. D. S. AYRES, D. O. CALDWELL, A. M. CORMACK, V. B. ELINGS, A. J. GREENBERG, W. P. HESSE, R. W. KENNEY, AND R. J. MORRISON.	49
HE3	PI-MINUS HE3 INTERACTIONS. J. SPERINDE, B. M. SMITH, L. KAUFMAN, AND V. PEREZ-MENDEZ.	51
HE4	PI-MINUS HE4 INTERACTIONS. L. KAUFMAN, V. PEREZ-MENDEZ, AND J. SPERINDE.	51
HIGH-ALTITUDE	HIGH-ALTITUDE PARTICLE PHYSICS AND COSMIC-RAY EXPERIMENTAL FACILITY. L. W. ALVAREZ, P. M. DAUBER, L. J. LLOYD, L. H. SMITH, AND M. A. WAHLIG.	27
HIGH-ENERGY	HIGH-ENERGY NEUTRON SPECTRUM MEASUREMENTS. H. H. HECKMAN AND H. W. PATTERSON.	44
HIGH-ENERGY	HIGH-ENERGY PHOTOPRODUCTION WITH POLARIZED PHOTONS. R. L. THEWS.	6
HIGH-ENERGY	MULTIPERIPHERAL BOOTSTRAP MODEL FOR HIGH-ENERGY COLLISIONS. G. F. CHEW AND A. PIGNOTTI.	1
HIGH-ORDER	HIGH-ORDER RESONANCE FOR DUFFING'S DIFFERENTIAL EQUATION.	87
HILDEBRAND	ETA LEPTONIC DECAYS. M. CHEN, R. HILDEBRAND, R. STIENING, AND C. WIEGAND.	60
HINKINS	BIOMEDICAL APPLICATIONS PROGRAMS. E. H. COLEMAN, R. HINKINS, W. D. HOGAN, M. W. HOROVITZ, G. M. LITTON, T. F. MAHAN, M. C. SIMMONS, AND K. G. WILEY.	81
HINKINS	PROGRAMMING FOR MOYER-HELMHOLZ GROUP. RUTH HINKINS.	78
HIRATA	K-PLUS DEUTERON INTERACTION FROM 800 TO 1600 MEV/C. R. BLAND, A. A. HIRATA, G. GOLDHABER, V. H. SEEGER, G. H. TRILLING, AND C. G. WOHL.	68
HOCH	PI-PLUS DEUTERON INTERACTIONS FROM 2.8 TO 4.2 GEV/C. M. A. ABOLINS, O. I. DAHL, AND P. HOCH.	22
HOEDEMAKER	DATA-REDUCTION OPERATIONS. E. H. HOEDEMAKER.	29
HOGAN	BIOMEDICAL APPLICATIONS PROGRAMS. E. H. COLEMAN, R. HINKINS, W. D. HOGAN, M. W. HOROVITZ, G. M. LITTON, T. F. MAHAN, M. C. SIMMONS, AND K. G. WILEY.	81
HOROVITZ	BIOMEDICAL APPLICATIONS PROGRAMS. E. H. COLEMAN, R. HINKINS, W. D. HOGAN, M. W. HOROVITZ, G. M. LITTON, T. F. MAHAN, M. C. SIMMONS, AND K. G. WILEY.	81
HUMAN	HUMAN FERROKINETICS.	87
HUTCHINSON	SYSTEMS PROGRAMMING. E. R. BEALS, W. H. BENSON, J. R. BORGES, D. N. BRAINARD, W. F. DEMPSTER, R. L. FINK, J. E. GLASNER, W. H. HUTCHINSON, J. P. JOHNSON, J. A. KNIGHT, S. J. PENNY, D. F. STEVENS, AND R. E. TRACY.	84

HYDROGEN	25-INCH HYDROGEN BUBBLE CHAMBER. W. M. POWELL AND G. J. ECKMAN.	53
HYDROGEN	25-INCH HYDROGEN BUBBLE-CHAMBER RUN. POWELL-BIRGE GROUP.	53
HYPERON	HYPERON PRODUCTION AND DECAY. F. S. CRAWFORD, AND J. C. DOYLE.	17
HYPERONS	PRODUCTION AND DECAY OF CASCADE HYPERONS. P. M. DAUBER AND R. MULLER.	18
IDENTIFIER	PARTICLE IDENTIFIER. D. GREINER, R. ALBERT, AND H. HECKMAN.	43
INELASTIC	LRL-SLAC EXPERIMENT ON PI-MINUS PROTON INELASTIC REACTIONS. L. R. PRICE, A. H. ROSENFELD, P. SODING, D. HERNDON, R. LONGACRE, D. LEITH, A. BRODY, AND B. SHEN.	25
INELASTIC	SEARCH FOR T VIOLATION IN INELASTIC ELECTRON-PROTON SCATTERING. O. CHAMBERLAIN, G. SHAPIRO, H. L. WEISBERG, P. R. ROBRISH, S. ROCK, S. SHANNON, R. TAYLOR, L. MO, E. BLOOM, J. LITT, H. KENDALL, AND J. FRIEDMAN.	62
INELASTIC	STUDY OF INELASTIC EFFECTS IN P11-STATE PION-NUCLEON SCATTERING. K. M. ONG.	8
INNER BELT	TEMPORAL CHANGES IN THE INNER-BELT PROTONS. H. H. HECKMAN AND G. H. NAKANO.	43
INSTABILITY	QUASILINEAR EVOLUTION OF THE WEIBEL-KAHN INSTABILITY. N. ALBRIGHT.	11
INTERACTIVE	INTERACTIVE TIME-SHARING SYSTEM.	85
ION	COLLECTIVE ION ACCELERATOR. L. J. LASLETT AND A. M. SESSLER.	12
IRRADIATION	GRAPHICAL TECHNIQUE FOR ESTIMATING ACTIVITY LEVELS PRODUCED IN THERMAL-NEUTRON AND FISSION-NEUTRON IRRADIATION. J. T. ROUTTI.	72
JACKSON	FACTORIZATION, KINEMATIC SINGULARITIES, AND CONSPIRACIES. F. ARBAB AND J. D. JACKSON.	2
JENSON	RESEARCH IN MATHEMATICS AND COMPUTING SCIENCES. W. H. BENSON, P. CONCUS, H. HANERFELD, D. W. JENSON, L. P. MEISSNER, G. C. NOONEY, AND L. S. VARDAS.	85
JEW	K-MINUS DEUTERON AND K-MINUS NEUTRON ELASTIC SCATTERING. G. E. KALMUS AND N. JEW.	54
JOHNSON	NEUTRAL LEPTONIC CURRENTS. A. R. CLARK, T. ELIOFF, H. J. FRISCH, R. P. JOHNSON, D. KEEFE, L. T. KERTH, D. NEWTON, AND W. A. WENZEL.	45
JOHNSON	PHASE-SHIFT ANALYSIS OF CHARGED-PION PROTON ELASTIC-SCATTERING EXPERIMENTS. C. H. JOHNSON, JR., O. CHAMBERLAIN, R. FIELD, AND H. STEINER.	62
JOHNSON	SYSTEMS PROGRAMMING. E. R. BEALS, W. H. BENSON, J. R. BORGES, D. N. BRAINARD, W. F. DEMPSTER, R. L. FINK, J. E. GLASNER, W. H. HUTCHINSON, J. P. JOHNSON, J. A. KNIGHT, S. J. PENNY, D. F. STEVENS, AND R. E. TRACY.	84
JONES	K-E4 EXPERIMENT. B. GAULD, V. PEREZ-MENDEZ, R. CENCE, B. D. JONES, R. MORGADO, M. PETERS, AND V. Z. PETERSON.	49
JONES	K-L-ZERO GOES TO 2 PI-ZERO. A. C. HELMHOLZ, R. W. KENNEY, I. R. LINSCOTT, B. J. MOYER, W. P. OLIVER, S. I. PARKER, C. A. REY, R. J. CENCE, B. D. JONES, V. Z. PETERSON, AND V. J. STENGER.	47
JONTULOVIC	DAPR -- FULLY AUTOMATIC EVENT SCANNING AND MEASUREMENT. B. BRITTON, J. CRAWFORD, J. FRANZ, W. S. GEE, D. HALL, N. JONTULOVIC, H. WHITE, AND F. WINDORSKI.	92

K MESON	STUDY OF THE NEUTRAL K MESON. B. WEBBER, F. S. CRAWFORD, AND M. ALSTON-GARNJOST.	22
K-E4	K-E4 EXPERIMENT. B. GAULD, V. PEREZ-MENDEZ, R. CENCE, B. D. JONES, R. MORGADO, M. PETERS, AND V. Z. PETERSON.	49
K-L-ZERO	K-L-ZERO GOES TO 2 PI-ZERO. A. C. HELMHOLZ, R. W. KENNEY, I. R. LINSCOTT, B. J. MOYER, W. P. OLIVER, S. I. PARKER, C. A. REY, R. J. CENCE, B. D. JONES, V. Z. PETERSON, AND V. J. STENGER.	47
K-MINUS	K-MINUS DEUTERON AND K-MINUS NEUTRON ELASTIC SCATTERING. G. E. KALMUS AND N. JEW.	54
K-MINUS	K-MINUS INTERACTIONS IN DEUTERIUM. A. BARBARO-GALTIERI, M. MATISON, AND A. RITTENBERG.	20
K-MINUS	K-MINUS PROTON GOES TO LAMBDA PI-PLUS PI-MINUS AND K-MINUS PROTON GOES TO LAMBDA PLUS MISSING MASS. T. S. MAST, A. BARBARO-GALTIERI, AND R. D. TRIPP.	21
K-MINUS	K-MINUS PROTON GOES TO LAMBDA-ZERO PI-ZERO. R. P. ELY AND J. LOUIE.	53
K-MINUS	LOW-ENERGY K-MINUS PROTON INTERACTIONS. J. H. CHAN AND J. A. KADYK.	67
K-MINUS	PRODUCTION OF SIGMAS IN K-MINUS PROTON INTERACTIONS. M. PRIPSTEIN AND P. EBERHARD.	19
K-MINUS	REACTION K-MINUS PROTON GOES TO K-STAR-SUB-HALF(892) K-STAR-SUB-THREEHALVES(1238). J. H. FRIEDMAN AND R. R. ROSS.	19
K-MINUS	REACTIONS K-MINUS PROTON GOES TO ANTIK-ZERO NEUTRON AND K-MINUS PROTON GOES TO LAMBDA PI-ZERO. S. M. FLATTE, A. BARBARO-GALTIERI, R. D. TRIPP, AND C. G. WOHL.	19
K-MINUS	STUDY OF K-MINUS PROTON FOUR-PRONGED REACTIONS. J. H. FRIEDMAN, R. R. ROSS, AND A. KIRSCHBAUM.	20
K-MINUS	STUDY OF THE REACTION K-MINUS PROTON GOES TO SIGMA-PLUSMINUS PI-MINUSPLUS. P. M. DAUBER AND A. BARBARO-GALTIERI.	19
K-MU3-ZERO	CHARGE ASYMMETRY IN K-MU3-ZERO DECAYS. R. J. BUDNITZ, R. L. MCCARTHY, D. H. MILLER, AND W. N. ROSS.	40
K-PLUS	K-PLUS DECAY ANALYSIS. K. M. CROWE, R. P. HADDOCK, M. E. ZELLER, AND N. T. DAIRIKI.	39
K-PLUS	K-PLUS DEUTERON INTERACTION FROM 800 TO 1600 MEV/C. R. BLAND, A. A. HIRATA, G. GOLDHABER, V. H. SEEGER, G. H. TRILLING, AND C. G. WOHL.	68
K-PLUS	K-PLUS PROTON INTERACTIONS AT 9 GEV/C. G. ALEXANDER, A. FIRESTONE, C. M. FU, AND G. GOLDHABER.	69
K-PLUS	MEASUREMENT OF THE PI-ZERO ENERGY SPECTRUM IN K-PLUS DECAY TO PI-ZERO MU-PLUS NEUTRINO. P. KIJEWSKI, D. CUTTS, M. DEUTSCH, R. STIENING, AND C. WIEGAND.	59
K-PLUS	MUON POLARIZATION IN K-PLUS DECAY TO PI-ZERO MU-PLUS NEUTRINO (K-MU3-PLUS). M. DEUTSCH, R. STIENING, AND C. WIEGAND.	59
K-PLUS	STUDY OF K-PLUS DECAY TO PI-PLUS PI-ZERO GAMMA. P. KIJEWSKI, D. CUTTS, M. DEUTSCH, R. STIENING, AND C. WIEGAND.	59
K-PLUS	STUDY OF THE K-PLUS DECAY TO MU-PLUS NEUTRINO GAMMA. M. CHEN, D. CUTTS, M. DEUTSCH, R. STIENING, AND C. WIEGAND.	60
K-TWO-ZERO	K-TWO-ZERO CHARGE ASYMMETRY. D. H. MILLER AND M. A. PACIOTTI.	40

KADYK	LAMBDA-ZERO PROTON INTERACTIONS. J. A. KADYK, G. H. TRILLING, P. GAPOSCHKIN, G. ALEXANDER, R. A. HESS, S. R. G. FANG, AND F. M. HAMZEH.	67
KADYK	LOW-ENERGY K-MINUS PROTON INTERACTIONS. J. H. CHAN AND J. A. KADYK.	67
KADYK	NEW 25-INCH BUBBLE-CHAMBER BEAM. J. A. KADYK, D. G. COYNE, AND W. R. BUTLER.	67
KALMUS	K-MINUS DEUTERON AND K-MINUS NEUTRON ELASTIC SCATTERING. G. E. KALMUS AND N. JEW.	54
KALMUS	STUDY OF THE REACTION PI-PLUS PROTON GOES TO ETA-ZERO DELTA-PLUSPLUS. G. BORREANI, G. GIDAL, AND G. E. KALMUS.	55
KALMUS	STUDY OF THE STRANGE-PARTICLE CHANNELS IN PI-PLUS PROTON AT 1.34, 1.43, AND 1.68 GEV/C. G. BORREANI AND G. E. KALMUS.	55
KALMUS	TWO-PION EVENTS IN PI-PLUS PROTON FILM AT 1.35, 1.43, AND 1.68 GEV/C. R. W. BIRGE AND G. E. KALMUS.	55
KANSTEIN	MODEL OF RADIO-FREQUENCY SYSTEM FOR IMPROVEMENT OF 184-INCH CYCLOTRON. L. KANSTEIN.	105
KAPLAN	A SEARCH FOR EXCITED LEVELS OF NITROGEN-15 PRODUCED BY MU-MINUS CAPTURE IN OXYGEN-16. S. N. KAPLAN, R. B. PYLE, AND L. E.	49
KAUFMAN	PHOTOPRODUCTION OF VECTOR MESONS. L. KAUFMAN, V. PEREZ-MENDEZ, A. W. STETZ, S. H. WILLIAMS, A. BOYARSKI, F. BULOS, R. DIEBOLD, R. LARSEN, D. LEITH, B. RICHTER, AND W. BUSZA.	50
KAUFMAN	PI-MINUS HE3 INTERACTIONS. J. SPERINDE, B. M. SMITH, L. KAUFMAN, AND V. PEREZ-MENDEZ.	51
KAUFMAN	PI-MINUS HE4 INTERACTIONS. L. KAUFMAN, V. PEREZ-MENDEZ, AND J. SPERINDE.	51
KAUFMAN	SPARK CHAMBERS FOR THE MEDICAL PROGRAM. L. KAUFMAN, V. PEREZ-MENDEZ, J. SPERINDE, A. RINDI, AND H. WOLLENBERG.	51
KAUFMANN	BOOTSTRAP SOLUTIONS OF THE BETHE-SALPETER EQUATION. W. B. KAUFMANN.	7
KAUFMANN	TWO-CHANNEL CALCULATIONS WITH THE BETHE-SALPETER EQUATION. W. B. KAUFMANN.	7
KEEFE	MEASUREMENT OF THE (K-PLUS DECAY TO POSITRON + NEUTRINO) (K-PLUS DECAY TO MU-PLUS + NEUTRINO) BRANCHING RATIO. A. R. CLARK, B. CORK, T. ELIOFF, D. KEEFE, L. T. KERTH, J. F. MCREYNOLDS, AND W. A. WENZEL.	45
KEEFE	NEUTRAL LEPTONIC CURRENTS. A. R. CLARK, T. ELIOFF, H. J. FRISCH, R. P. JOHNSON, D. KEEFE, L. T. KERTH, D. NEWTON, AND W. A. WENZEL.	45
KENDALL	SEARCH FOR T VIOLATION IN INELASTIC ELECTRON-PROTON SCATTERING. O. CHAMBERLAIN, G. SHAPIRO, H. L. WEISBERG, P. R. ROBRISH, S. ROCK, S. SHANNON, R. TAYLOR, L. MO, E. BLOOM, J. LITT, H. KENDALL, AND J. FRIEDMAN.	62
KENNEY	COMPARISON OF THE LIFETIMES OF PI-PLUS AND PI-MINUS. D. S. AYRES, D. D. CALDWELL, A. M. CORMACK, V. B. ELINGS, A. J. GREENBERG, W. P. HESSE, R. W. KENNEY, AND R. J. MORRISON.	49
KENNEY	ETA-ZERO DECAY AND PI-ZERO PI-ZERO NEUTRON EXPERIMENTS. T. B. RISSER, R. W. KENNEY, M. PRIPSTEIN, O. DAHL, AND M. A. WAHLIG.	47

KENNEY	K-L-ZERO GOES TO 2 PI-ZERO. A. C. HELMHOLZ, R. W. KENNEY, I. R. LINSCOTT, B. J. MOYER, W. P. OLIVER, S. I. PARKER, C. A. REY, R. J. CENCE, B. D. JONES, V. Z. PETERSON, AND V. J. STENGER.	47
KERTH	DIBOSON PRODUCTION BY 2-TO-5-GEV/C PIONS. A. R. CLARK, B. CORK, T. ELIOFF, L. T. KERTH, T. N. RANGASWAMY, AND W. A. WENZEL.	45
KERTH	MEASUREMENT OF THE (K-PLUS DECAY TO POSITRON + NEUTRINO) (K-PLUS DECAY TO MU-PLUS + NEUTRINO) BRANCHING RATIO. A. R. CLARK, B. CORK, T. ELIOFF, D. KEEFE, L. T. KERTH, J. F. MCREYNOLDS, AND W. A. WENZEL.	45
KERTH	NEUTRAL LEPTONIC CURRENTS. A. R. CLARK, T. ELIOFF, H. J. FRISCH, R. P. JOHNSON, D. KEEFE, L. T. KERTH, D. NEWTON, AND W. A. WENZEL.	45
KERTH	NUCLEON-NUCLEON TRIPLE SCATTERING. C. M. ANKENBRANDT, D. CHENG, L. T. KERTH, K. C. LEUNG, B. MACDONALD, AND P. SURKO.	46
KIJEWSKI	MEASUREMENT OF THE PI-ZERO ENERGY SPECTRUM IN K-PLUS DECAY TO PI-ZERO MU-PLUS NEUTRINO. P. KIJEWSKI, D. CUTTS, M. DEUTSCH, R. STIENING, AND C. WIEGAND.	59
KIJEWSKI	STUDY OF K-PLUS DECAY TO PI-PLUS PI-ZERO GAMMA. P. KIJEWSKI, D. CUTTS, M. DEUTSCH, R. STIENING, AND C. WIEGAND.	59
KINEMATIC	FACTORIZATION, KINEMATIC SINGULARITIES, AND CONSPIRACIES. F. ARBAB AND J. D. JACKSON.	2
KINEMATICAL	CLOUDY -- KINEMATICAL ANALYSIS. V. MORGAN.	91
KIRSCHBAUM	STUDY OF K-MINUS PROTON FOUR-PRONGED REACTIONS. J. H. FRIEDMAN, R. R. ROSS, AND A. KIRSCHBAUM.	20
KLEIN	BACKSCATTERED LASER BEAM AT SLAC. W. PODOLSKY, A. H. ROSENFELD, P. SÖDING, R. D. TRIPP, AND M. S. RABIN, J. J. MURRAY, P. KLEIN, AND C. SINCLAIR.	26
KLEIN	NUCLEON-NUCLEON INTERACTIONS. W. CHINOWSKY, P. SCHMIDT, W. GAGE, AND S. KLEIN.	60
KNIGHT	SYSTEMS PROGRAMMING. E. R. BEALS, W. H. BENSON, J. R. BORGES, D. N. BRAINARD, W. F. DEMPSTER, R. L. FINK, J. E. GLASNER, W. H. HUTCHINSON, J. P. JOHNSON, J. A. KNIGHT, S. J. PENNY, D. F. STEVENS, AND R. E. TRACY.	84
KRONECKER	NONEXSISTENCE OF KRONECKER DELTAS IN ANGULAR MOMENTUM FOR STRONG PROCESSES. C. I. TAN.	2
KUNSELMAN	PIONIC ATOMS. R. KUNSELMAN AND G. A. GRIN.	61
K63	K63 EXPERIMENT.	18
K65	K65 EXPERIMENT.	20
K82	K82 EXPERIMENT. S. M. FLATTE, J. H. FRIEDMAN, A. BARBARO-GALTIERI, M. ALSTON-GARNJOST, G. R. LYNCH, M. S. RABIN, F. T. SOLMITZ, P. DAVIS, AND V. WALUCH.	26
LAMB	PROGRAMMING FOR TRILLING-GOLDHABER GROUP. D. ARMSTRONG, E. R. BURNS, B. H. HALL, D. P. LAMB, AND J. G. MILLER.	77
LAMBDA	K-MINUS PROTON GOES TO LAMBDA PI-PLUS PI-MINUS AND K-MINUS PROTON GOES TO LAMBDA PLUS MISSING MASS. T. S. MAST, A. BARBARO-GALTIERI, AND R. D. TRIPP.	21
LAMBDA	REACTIONS K-MINUS PROTON GOES TO ANTIK-ZERO NEUTRON AND K-MINUS PROTON GOES TO LAMBDA PI-ZERO. S. M. FLATTE, A. BARBARO-GALTIERI, R. D. TRIPP, AND C. G. WOHL.	19
LAMBDA-ZERO	K-MINUS PROTON GOES TO LAMBDA-ZERO PI-ZERO. R. P. ELY AND J. LOUIE.	53

LAMBDA-ZERO	LAMBDA-ZERO PROTON INTERACTIONS. J. A. KADYK, G. H. TRILLING, P. GAPOSCHKIN, G. ALEXANDER, R. A. HESS, S. R. G. FANG, AND F. M. HAMZEH.	67
LARSEN	PHOTOPRODUCTION OF VECTOR MESONS. L. KAUFMAN, V. PEREZ-MENDEZ, A. W. STETZ, S. H. WILLIAMS, A. BOYARSKI, F. BULOS, R. DIEBOLD, R. LARSEN, D. LEITH, B. RICHTER, AND W. BUSZA.	50
LASER	BACKSCATTERED LASER BEAM AT SLAC. W. PODOLSKY, A. H. ROSENFELD, P. SÖDING, R. D. TRIPP, AND M. S. RABIN, J. J. MURRAY, P. KLEIN, AND C. SINCLAIR.	26
LASLETT	COLLECTIVE ION ACCELERATOR. L. J. LASLETT AND A. M. SESSLER.	12
LASLETT	COMPUTATIONS CONCERNING NONLINEAR, AREA-PRESERVING ALGEBRAIC EQUATIONS. L. J. LASLETT.	12
LEE	FINITE-ENERGY SUM RULES FOR BACKWARD PION-NUCLEON SCATTERING. H. LEE.	4
LEE	REGGE-POLE FORMALISM FOR PIONIC DISINTEGRATION OF THE DEUTERON. H. LEE.	8
LEITH	LRL-SLAC EXPERIMENT ON PI-MINUS PROTON INELASTIC REACTIONS. L. R. PRICE, A. H. ROSENFELD, P. SODING, D. HERNDON, R. LONGACRE, D. LEITH, A. BRODY, AND B. SHEN.	25
LEITH	PHOTOPRODUCTION OF VECTOR MESONS. L. KAUFMAN, V. PEREZ-MENDEZ, A. W. STETZ, S. H. WILLIAMS, A. BOYARSKI, F. BULOS, R. DIEBOLD, R. LARSEN, D. LEITH, B. RICHTER, AND W. BUSZA.	50
LEPTONIC	ETA LEPTONIC DECAYS. M. CHEN, R. HILDEBRAND, R. STIENING, AND C. WIEGAND.	60
LEPTONIC	LEPTONIC DECAYS OF ETA MESONS. F. S. CRAWFORD, L. R. PRICE, AND R. A. GROSSMAN.	17
LEPTONIC	NEUTRAL LEPTONIC CURRENTS. A. R. CLARK, T. ELIOFF, H. J. FRISCH, R. P. JOHNSON, D. KEEFE, L. T. KERTH, D. NEWTON, AND W. A. WENZEL.	45
LEUKEMIA	ETIOLOGY OF LEUKEMIA.	87
LEUNG	NUCLEON-NUCLEON TRIPLE SCATTERING. C. M. ANKENBRANDT, D. CHENG, L. T. KERTH, K. C. LEUNG, B. MACDONALD, AND P. SURKO.	46
LEVINE	ACCELERATOR AND MAGNET DESIGN PROGRAMS. R. AHLSTRAND, V. O. BRADY, B. R. BURKHART, E. R. CLOSE, J. S. COLONIAS, R. N. HEALEY, B. S. LEVINE, B. M. POWELL, AND S. J. SACKETT.	80
LIBRARY FUNCTION	LIBRARY-FUNCTION PROGRAMS.	34
LIFETIMES	COMPARISON OF THE LIFETIMES OF PI-PLUS AND PI-MINUS. D. S. AYRES, D. O. CALDWELL, A. M. CORMACK, V. B. ELINGS, A. J. GREENBERG, W. P. HESSE, R. W. KENNEY, AND R. J. MORRISON.	49
LINEARLY	SURFACES WITH LINEARLY VARYING MEAN CURVATURE.	86
LINK	ACCELERATOR LINK.	84
LINK	PDP5/8 -- 6600 DATA LINK.	78
LINSCOTT	K-L-ZERO GOES TO 2 PI-ZERO. A. C. HELMHOLZ, R. W. KENNEY, I. R. LINSCOTT, B. J. MOYER, W. P. OLIVER, S. I. PARKER, C. A. REY, R. J. CENCE, B. D. JONES, V. Z. PETERSON, AND V. J. STENGER.	47
LITT	SEARCH FOR T VIOLATION IN INELASTIC ELECTRON-PROTON SCATTERING. O. CHAMBERLAIN, G. SHAPIRO, H. L. WEISBERG, P. R. ROBRISH, S. ROCK, S. SHANNON, R. TAYLOR, L. MO, E. BLOOM, J. LITT, H. KENDALL, AND J. FRIEDMAN.	62

LITTON	BIOMEDICAL-APPLICATIONS PROGRAMS. E. H. COLEMAN, R. HINKINS, W. D. HOGAN, M. W. HOROVITZ, G. M. LITTON, T. F. MAHAN, M. C. SIMMONS, AND K. G. WILEY.	81
LITTON	DOSIMETRIC CALCULATIONS. G. M. LITTON, P. G. STEWARD, AND R. W. WALLACE.	71
LITTON	NUCLEAR CHEMISTRY PROGRAMMING. N. BROWN, P. A. COLLOM, G. LITTON, AND C. E. RUGGE.	79
LLOYD	HIGH-ALTITUDE PARTICLE PHYSICS AND COSMIC-RAY EXPERIMENTAL FACILITY. L. W. ALVAREZ, P. M. DAUBER, L. J. LLOYD, L. H. SMITH, AND M. A. WAHLIG.	27
LOFGREN	ACCELERATOR-STUDY PUBLICATIONS -- LOFGREN.	100
LOFGREN	ACCELERATOR-STUDY. E. J. LOFGREN.	95
LOFGREN	BEVATRON PUBLICATIONS -- LOFGREN.	103
LOFGREN	BEVATRON. E. J. LOFGREN.	101
LOFGREN	EXPERIMENTAL PHYSICS. E. J. LOFGREN.	45
LOFGREN	LOFGREN PHYSICS PUBLICATIONS.	46
LOFGREN	PROGRAMMING FOR LOFGREN PHYSICS GROUP. B. M. POWELL, J. P. TYSON, L. WILSON, AND D. H. ZURLINDEN.	78
LONGACRE	LRL-SLAC EXPERIMENT ON PI-MINUS PROTON INELASTIC REACTIONS. L. R. PRICE, A. H. ROSENFELD, P. SÖDING, D. HERNDON, R. LONGACRE, D. LEITH, A. BRODY, AND B. SHEN.	25
LONGO	MEASUREMENT OF NEUTRON PROTON GOES TO GAMMA DEUTERON ANGULAR DISTRIBUTION AS A DIRECT TEST OF TIME REVERSAL IN THE ELECTROMAGNETIC INTERACTION. D. CHENG, V. PEREZ-MENDEZ, J. M. SPERINDE, J. A. HELLAND, B. L. SCHROCK, R. P. HADDOCK, J. DETOUEF, M. J. LONGO, S. WILSON, AND K. K. YOUNG.	50
LORENTZ	DAUGHTERS, CONSPIRACIES, AND LORENTZ SYMMETRY. K. M. BITAR AND G. L. TINDLE.	5
LOUIE	K-MINUS PROTON GOES TO LAMBDA-ZERO PI-ZERO. R. P. ELY AND J. LOUIE.	53
LOW-ENERGY	CURRENT ALGEBRA AND LOW-ENERGY MESON-BARYON SCATTERING. P. SHERS.	7
LOW-ENERGY	LOW-ENERGY K-MINUS PROTON INTERACTIONS. J. H. CHAN AND J. A. KADYK.	67
LOW-ENERGY	LOW-ENERGY NUCLEAR PHYSICS.	10
LRL-SLAC	LRL-SLAC EXPERIMENT ON PI-MINUS PROTON INELASTIC REACTIONS. L. R. PRICE, A. H. ROSENFELD, P. SODING, D. HERNDON, R. LONGACRE, D. LEITH, A. BRODY, AND B. SHEN.	25
LYNCH	D66 EXPERIMENT. P. EBERHARD, G. R. LYNCH, AND M. PRIPSTEIN.	24
LYNCH	K82 EXPERIMENT. S. M. FLATTE, J. H. FRIEDMAN, A. BARBARO-GALTIERI, M. ALSTON-GARNJOST, G. R. LYNCH, M. S. RABIN, F. T. SOLMITZ, P. DAVIS, AND V. WALUCH.	26
MACDONALD	NUCLEON-NUCLEON TRIPLE SCATTERING. C. M. ANKENBRANDT, D. CHENG, L. T. KERTH, K. C. LEUNG, B. MACDONALD, AND P. SURKO.	46
MACNAUGHTON	PI-PLUS PROTON INTERACTION AT 3.7 GEV/C. W. R. BUTLER, D. G. COYNE, P. GAPOSCHKIN, AND J. MACNAUGHTON.	68
MAGNET	ACCELERATOR AND MAGNET DESIGN PROGRAMS. R. AHLSTRAND, V. D. BRADY, B. R. BURKHART, E. R. CLOSE, J. S. COLONIAS, R. N. HEALEY, E. S. LEVINE, B. M. POWELL, AND S. J. SACKETT.	80

MAGNET	SYNCHROTRON MAGNET DESIGN.	95
MAGNETIC	SIGMA-PLUS MAGNETIC MOMENT. T. S. MAST AND L. K. GERSHWIN.	21
MAHAN	BIOMEDICAL APPLICATIONS PROGRAMS. E. H. COLEMAN, R. HINKINS, W. D. HOGAN, M. W. HOROVITZ, G. M. LITTON, T. F. MAHAN, M. C. SIMMONS, AND K. G. WILEY.	81
MANDELKERN	ANTIPROTON-PROTON INTERACTIONS. M. MANDELKERN, W. CHINOWSKY, R. BURNS, P. CONDON, J. SCHULTZ, AND P. SCHMIDT.	61
MANNING	SEARCH FOR A 2PI-ZERO RESONANCE NEAR 730 MEV IN PI-PLUS DEUTERON INTERACTIONS. R. J. MANNING AND G. A. SMITH.	23
MANY-BODY	MANY-BODY PHYSICS.	11
MASS	K-MINUS PROTON GOES TO LAMBDA PI-PLUS PI-MINUS AND K-MINUS PROTON GOES TO LAMBDA PLUS MISSING MASS. T. S. MAST, A. BARBARO-GALTIERI, AND R. D. TRIPP.	21
MASS	MASS STORAGE SYSTEM.	84
MASSES	GROUND-STATE MASSES OF EVEN-EVEN NUCLEI. C. F. TSANG.	10
MAST	CHARGE-EXCHANGE (K-MINUS PROTON GOES TO ANTIK-ZERO NEUTRON) AND ELASTIC (K-MINUS PROTON GOES TO K-MINUS PROTON) REACTIONS. T. S. MAST, R. BANGERTER, A. BARBARO-GALTIERI, AND R. D. TRIPP.	22
MAST	K-MINUS PROTON GOES TO LAMBDA PI-PLUS PI-MINUS AND K-MINUS PROTON GOES TO LAMBDA PLUS MISSING MASS. T. S. MAST, A. BARBARO-GALTIERI, AND R. D. TRIPP.	21
MAST	SIGMA-PLUS MAGNETIC MOMENT. T. S. MAST AND L. K. GERSHWIN.	21
MATHEMATICS	MATHEMATICS AND COMPUTING. J. A. BAKER.	75
MATHEMATICS	RESEARCH IN MATHEMATICS AND COMPUTING SCIENCES. W. H. BENSON, P. CONCUS, H. HANERFELD, D. W. JENSON, L. P. MEISSNER, G. C. NOONEY, AND L. S. VARDAS.	85
MATHEWS	EFFECTS OF PSEUDOTHRESHOLD CONSTRAINTS ON REGGE FITS. R. D. MATHEWS.	6
MATISON	K-MINUS INTERACTIONS IN DEUTERIUM. A. BARBARO-GALTIERI, M. MATISON, AND A. RITTENBERG.	20
MATRIX	RELATIONS BETWEEN SPIN DENSITY MATRIX ELEMENTS. G. A. RINGLAND AND R. L. THEWS.	6
MAUNG	PION-PION S-WAVE INTERACTION. K. M. CROWE, T. MAUNG, AND N. DAIRIKI.	40
MAY-NOVEMBER	MAY-NOVEMBER 1968 DATA-REDUCTION FORECAST. 1PROGRAMMING EFFORT. B. PARDOE.	32
MCCARTHY	CHARGE ASYMMETRY IN K-MU3-ZERO DECAYS. R. J. BUDNITZ, R. L. MCCARTHY, D. H. MILLER, AND W. N. ROSS.	40
MCREYNOLDS	MEASUREMENT OF THE (K-PLUS DECAY TO POSITRON + NEUTRINO) (K-PLUS DECAY TO MU-PLUS + NEUTRINO) BRANCHING RATIO. A. R. CLARK, B. CORK, T. ELIOFF, D. KEEFE, L. T. KERTH, J. F. MCREYNOLDS, AND W. A. WENZEL.	45
MEASUREMENT	DAPR -- FULLY AUTOMATIC EVENT SCANNING AND MEASUREMENT. B. BRITTON, J. CRAWFORD, J. FRANZ, W. S. GEE, D. HALL, N. JONTULOVIC, H. WHITE, AND F. WINDORSKI.	92
MEASUREMENT	HAZE -- SEMIAUTOMATIC EVENT MEASUREMENT. S. BUCKMAN, J. CRAWFORD, P. DAVIS, W. S. GEE, J. GREENE, C. OSBORNE, AND L. SHALZ.	91
MEASUREMENT	MEASUREMENT OF NEUTRON PROTON GOES TO GAMMA DEUTERON ANGULAR DISTRIBUTION AS A DIRECT TEST OF TIME REVERSAL IN THE ELECTROMAGNETIC INTERACTION. D. CHENG, V. PEREZ-MENDEZ, J. M. SPERINDE, J. A. HELLAND, B. L. SCHROCK, R. P. HADDOCK, J. DETOUEF, M. J. LONGO, S. WILSON, AND K. K. YOUNG.	50

MEASUREMENT	MEASUREMENT OF THE (K-PLUS DECAY TO POSITRON + NEUTRINO) (K-PLUS DECAY TO MU-PLUS + NEUTRINO) BRANCHING RATIO. A. R. CLARK, B. CORK, T. ELIOFF, D. KEEFE, L. T. KERTH, J. F. MCREYNOLDS, AND W. A. WENZEL.	45
MEASUREMENT	MEASUREMENT OF THE DIFFERENTIAL CROSS SECTION FOR PI-MINUS GOES TO NEUTRON GAMMA. R. P. HADDOCK, J. A. HELLAND, B. M. K. NEFKENS, A. S. L. PARSONS, P. TRUOEL, L. VERHEY, AND M. E. ZELLER.	39
MEASUREMENT	MEASUREMENT OF THE PI-ZERO ENERGY SPECTRUM IN K-PLUS DECAY TO PI-ZERO MU-PLUS NEUTRINO. P. KIJEWSKI, D. CUTTS, M. DEUTSCH, R. STIENING, AND C. WIEGAND.	59
MEASUREMENTS	HIGH-ENERGY NEUTRON SPECTRUM MEASUREMENTS. H. H. HECKMAN AND H. W. PATTERSON.	44
MEASURING	MEASURING.	31
MEDICAL	SPARK CHAMBERS FOR THE MEDICAL PROGRAM. L. KAUFMAN, V. PEREZ-MENDEZ, J. SPERINDE, A. RINDI, AND H. WOLLENBERG.	51
MEISSNER	RESEARCH IN MATHEMATICS AND COMPUTING SCIENCES. W. H. BENSON, P. CONCUS, H. HANERFELD, D. W. JENSON, L. P. MEISSNER, G. C. NOONEY, AND L. S. VARDAS.	85
MESON	NEUTRAL DECAY MODES OF THE ETA MESON. O. I. DAHL, M. PRIPSTEIN, AND M. WAHLIG.	26
MESON	SYMMETRIES OF SELF-CONSISTENT TRILINEAR MESON COUPLINGS. C. SCHMID AND J. YELLIN.	5
MESON BARYON	CURRENT ALGEBRA AND LOW-ENERGY MESON-BARYON SCATTERING. P. SHERS.	7
MESONS	LEPTONIC DECAYS OF ETA MESONS. F. S. CRAWFORD, L. R. PRICE, AND R. A. GROSSMAN.	17
MESONS	PHOTOPRODUCTION OF VECTOR MESONS. L. KAUFMAN, V. PEREZ-MENDEZ, A. W. STETZ, S. H. WILLIAMS, A. BOYARSKI, F. BULOS, R. DIEBOLD, R. LARSEN, D. LEITH, B. RICHTER, AND W. BUSZA.	50
MESONS	PRODUCTION OF ETA MESONS. F. S. CRAWFORD, L. R. PRICE, AND R. A. GROSSMAN.	17
MESONS	SELF-CONSISTENT COUPLINGS OF THE 1-MINUS AND 2-PLUS NONETS TO THE ZERO-MINUS MESONS. C. SCHMID AND J. YELLIN.	4
MESONS	STOPPING-POWER DIFFERENCES OF CHARGED PI MESONS. H. H. HECKMAN.	44
MEV/C	K-PLUS DEUTERON INTERACTION FROM 800 TO 1600 MEV/C. R. BLAND, A. A. HIRATA, G. GOLDHABER, V. H. SEEGER, G. H. TRILLING, AND C. G. WOHL.	68
MEV/C	PI-MINUS PROTON INTERACTION AT 550 MEV/C. W. CHINOWSKY, P. SCHMIDT, AND W. GAGE.	61
MEYERS	AVERAGE NUCLEAR PROPERTIES. W. D. MEYERS AND W. J. SWIATECKI.	11
MILLER	CHARGE ASYMMETRY IN K-MU3-ZERO DECAYS. R. J. BUDNITZ, R. L. MCCARTHY, D. H. MILLER, AND W. N. ROSS.	40
MILLER	EXPERIMENTAL PHYSICS. K. M. CROWE AND D. H. MILLER.	39
MILLER	K-TWO-ZERO CHARGE ASYMMETRY. D. H. MILLER AND M. A. PACIOTTI.	40
MILLER	PROGRAMMING FOR TRILLING-GOLDHABER GROUP. D. ARMSTRONG, E. R. BURNS, B. H. HALL, D. P. LAMB, AND J. G. MILLER.	77
MISSING	K-MINUS PROTON GOES TO LAMBDA PI-PLUS PI-MINUS AND K-MINUS PROTON GOES TO LAMBDA PLUS MISSING MASS. T. S. MAST, A. BARBARO-GALTIERI, AND R. D. TRIPP.	21

MISSING-MASS	DEUTERON MISSING-MASS EXPERIMENT. M. A. ABOLINS, G. S. SMITH, L. H. SMITH, AND A. B. WICKLUND.	27
MO	SEARCH FOR T VIOLATION IN INELASTIC ELECTRON-PROTON SCATTERING. O. CHAMBERLAIN, G. SHAPIRO, H. L. WEISBERG, P. R. ROBRISH, S. ROCK, S. SHANNON, R. TAYLOR, L. MO, E. BLOOM, J. LITT, H. KENDALL, AND J. FRIEDMAN.	62
MOMENTUM	NONEXSISTENCE OF KRONECKER DELTAS IN ANGULAR MOMENTUM FOR STRONG PROCESSES. C. I. TAN.	2
MONGAN	SEPARABLE POTENTIAL FITS TO NUCLEON-NUCLEON SCATTERING DATA. T. R. MONGAN.	8
MONITOR	TRIST -- SYSTEM MONITOR. P. DAVIS AND C. OSBORNE.	92
MOREHOUSE	POLARIZATION IN PI-PLUS PROTON AND PI-MINUS PROTON ELASTIC SCATTERING FROM 250 TO 410 MEV. W. GORN, C. C. MOREHOUSE, T. M. POWELL, P. R. ROBRISH, S. ROCK, S. SHANNON, H. STEINER, AND H. WEISBERG.	61
MOREHOUSE	POLARIZED-PROTON TARGET IMPROVEMENTS. O. CHAMBERLAIN, W. GORN, C. MOREHOUSE, T. POWELL, P. ROBRISH, S. ROCK, S. SHANNON, G. SHAPIRO, AND H. WEISBERG.	63
MORGADO	K-E4 EXPERIMENT. B. GAULD, V. PEREZ-MENDEZ, R. CENCE, B. D. JONES, R. MORGADO, M. PETERS, AND V. Z. PETERSON.	49
MORGAN	CLOUDY -- KINEMATICAL ANALYSIS. V. MORGAN.	91
MORRISON	COMPARISON OF THE LIFETIMES OF PI-PLUS AND PI-MINUS. D. S. AYRES, D. O. CALDWELL, A. M. CORMACK, V. B. ELINGS, A. J. GREENBERG, W. P. HESSE, R. W. KENNEY, AND R. J. MORRISON.	49
MOTTERSHEAD	ANALYSIS OF PI-HE SCATTERING FOR THE PION ELECTROMAGNETIC FORM-FACTOR. C. T. MOTTERSHEAD.	9
MOYER	EXPERIMENTAL PHYSICS RESEARCH. B. J. MOYER AND A. C. HELMHOLZ.	47
MOYER	K-L-ZERO GOES TO 2 PI-ZERO. A. C. HELMHOLZ, R. W. KENNEY, I. R. LINSCOTT, B. J. MOYER, W. P. OLIVER, S. I. PARKER, C. A. REY, R. J. CENCE, B. D. JONES, V. Z. PETERSON, AND V. J. STENGER.	47
MOYER	PROGRAM IN COLLABORATION WITH MOYER-HELMHOLZ GROUP.	26
MOYER	PUBLICATIONS -- MOYER-HELMHOLZ.	52
MOYER-HELMHOLZ	PROGRAMMING FOR MOYER-HELMHOLZ GROUP. RUTH HINKINS.	78
MU-MINUS	A SEARCH FOR EXCITED LEVELS OF NITROGEN-15 PRODUCED BY MU-MINUS CAPTURE IN OXYGEN-16. S. N. KAPLAN, R. B. PYLE, AND L. E.	49
MU-PLUS	MEASUREMENT OF THE PI-ZERO ENERGY SPECTRUM IN K-PLUS DECAY TO PI-ZERO MU-PLUS NEUTRINO. P. KIJEWSKI, D. CUTTS, M. DEUTSCH, R. STIENING, AND C. WIEGAND.	59
MU-PLUS	MUON POLARIZATION IN K-PLUS DECAY TO PI-ZERO MU-PLUS NEUTRINO (K-MU3-PLUS). M. DEUTSCH, R. STIENING, AND C. WIEGAND.	59
MU-PLUS	STUDY OF THE K-PLUS DECAY TO MU-PLUS NEUTRINO GAMMA. M. CHEN, D. CUTTS, M. DEUTSCH, R. STIENING, AND C. WIEGAND.	60
MULLER	PRODUCTION AND DECAY OF CASCADE HYPERONS. P. M. DAUBER AND R. MULLER.	18
MULTI-REGGE	MULTI-REGGE UNITARITY. C. DETAR.	1
MULTIPERIPHERAL	MULTIPERIPHERAL BOOTSTRAP MODEL FOR HIGH-ENERGY COLLISIONS. G. F. CHEW AND A. PIGNOTTI.	1

MULTIPERIPHERAL	PROTON-ANTIPROTON ANNIHILATION IN A MULTIPERIPHERAL MODEL. G. F. CHEW AND A. PIGNOTTI.	1
MUON	COSMIC-RAY MUON EXPERIMENT. L. W. ALVAREZ, P. M. DAUBER, S. M FLATTE, L. H. SMITH, M. L. STEVENSON, AND M. A. WAHLIG.	28
MUON	MUON POLARIZATION IN K-PLUS DECAY TO PI-ZERO MU-PLUS NEUTRINO (K-MU3-PLUS). M. DEUTSCH, R. STIENING, AND C. WIEGAND.	59
MURRAY	BACKSCATTERED LASER BEAM AT SLAC. W. PODOLSKY, A. H. ROSENFELD, P. SÖDING, R. D. TRIPP, AND M. S. RABIN, J. J. MURRAY, P. KLEIN, AND C. SINCLAIR.	26
MYERS	PROGRAMMING FOR POWELL-BIRGE GROUP. H. C. ALBRECHT, H. HANERFELD, M. H. MYERS, J. TYSON, AND J. VISSER,	75
N-BODY	N-BODY FADDEEV EQUATIONS AND THE CLUSTER EXPANSION. W. BIERTER.	12
NAKANO	TEMPORAL CHANGES IN THE INNER-BELT PROTONS. H. H. HECKMAN AND G. H. NAKANO.	43
NEFKENS	MEASUREMENT OF THE DIFFERENTIAL CROSS SECTION FOR PI-MINUS GOES TO NEUTRON GAMMA. R. P. HADDOCK, J. A. HELLAND, B. M. K. NEFKENS, A. S. L. PARSONS, P. TRUOEL, L. VERHEY, AND M. E. ZELLER.	39
NEUTRINO	MEASUREMENT OF THE PI-ZERO ENERGY SPECTRUM IN K-PLUS DECAY TO PI-ZERO MU-PLUS NEUTRINO. P. KIJEWSKI, D. CUTTS, M. DEUTSCH, R. STIENING, AND C. WIEGAND.	59
NEUTRINO	MUON POLARIZATION IN K-PLUS DECAY TO PI-ZERO MU-PLUS NEUTRINO (K-MU3-PLUS). M. DEUTSCH, R. STIENING, AND C. WIEGAND.	59
NEUTRINO	STUDY OF THE K-PLUS DECAY TO MU-PLUS NEUTRINO GAMMA. M. CHEN, D. CUTTS, M. DEUTSCH, R. STIENING, AND C. WIEGAND.	60
NEUTRON	ETA-ZERO DECAY AND PI-ZERO PI-ZERO NEUTRON EXPERIMENTS. T. B. RISSER, R. W. KENNEY, M. PRIPSTEIN, O. DAHL, AND M. A. WAHLIG.	47
NEUTRON	HIGH-ENERGY NEUTRON SPECTRUM MEASUREMENTS. H. H. HECKMAN AND H. W. PATTERSON.	44
NEUTRON	K-MINUS DEUTERON AND K-MINUS NEUTRON ELASTIC SCATTERING. G. E. KALMUS AND N. JEW.	54
NEUTRON	MEASUREMENT OF NEUTRON PROTON GOES TO GAMMA DEUTERON ANGULAR DISTRIBUTION AS A DIRECT TEST OF TIME REVERSAL IN THE ELECTROMAGNETIC INTERACTION. D. CHENG, V. PEREZ-MENDEZ, J. M. SPERINDE, J. A. HELLAND, B. L. SCHROCK, R. P. HADDOCK, J. DETOUEF, M. J. LONGO, S. WILSON, AND K. K. YOUNG.	50
NEUTRON	MEASUREMENT OF THE DIFFERENTIAL CROSS SECTION FOR PI-MINUS GOES TO NEUTRON GAMMA. R. P. HADDOCK, J. A. HELLAND, B. M. K. NEFKENS, A. S. L. PARSONS, P. TRUOEL, L. VERHEY, AND M. E. ZELLER.	39
NEUTRON	REACTIONS K-MINUS PROTON GOES TO ANTIK-ZERO NEUTRON AND K-MINUS PROTON GOES TO LAMBDA PI-ZERO. S. M. FLATTE, A. BARBARO-GALTIERI, R. D. TRIPP, AND C. G. WOHL.	19
NEWTON	NEUTRAL LEPTONIC CURRENTS. A. R. CLARK, T. ELIOFF, H. J. FRISCH, R. P. JOHNSON, D. KEEFE, L. T. KERTH, D. NEWTON, AND W. A. WENZEL.	45
NITROGEN-15	A SEARCH FOR EXCITED LEVELS OF NITROGEN-15 PRODUCED BY MU-MINUS CAPTURE IN OXYGEN-16. S. N. KAPLAN, R. B. PYLE, AND L. E.	49
NONETS	SELF-CONSISTENT COUPLINGS OF THE 1-MINUS AND 2-PLUS NONETS TO THE ZERO-MINUS MESONS. C. SCHMID AND J. YELLIN.	4

NONEXSISTENCE	NONEXSISTENCE OF KRONECKER DELTAS IN ANGULAR MOMENTUM FOR STRONG PROCESSES. C. I. TAN.	2
NONLINEAR	COMPUTATIONS CONCERNING NONLINEAR, AREA-PRESERVING ALGEBRAIC EQUATIONS. L. J. LASLETT.	12
NONLINEAR	NONLINEAR BLOCK-SUCCESSIVE OVERRELAXATION.	86
NONSENSE-CHOOSING	POMERANCHON AS A NONSENSE-CHOOSING REGGE TRAJECTORY. C. I. TAN.	3
NONSTRANGE	NONSTRANGE INTERACTIONS IN PROTON-PROTON COLLISIONS AT 6.6 GEV/C. E. GELLERT AND G. A. SMITH.	24
NOONEY	RESEARCH IN MATHEMATICS AND COMPUTING SCIENCES. W. H. BENSON, P. CONCUS, H. HANERFELD, D. W. JENSON, L. P. MEISSNER, G. C. NOONEY, AND L. S. VARDAS.	85
NUCLEAR	AVERAGE NUCLEAR PROPERTIES. W. D. MEYERS AND W. J. SWIATECKI.	11
NUCLEAR	HEAT TRANSFER THROUGH A THIN ROTATING NUCLEAR TARGET.	86
NUCLEAR	LOW-ENERGY NUCLEAR PHYSICS.	10
NUCLEAR	NUCLEAR CHEMISTRY PROGRAMMING. N. BROWN, P. A. COLLOM, G. LITTON, AND C. E. RUGGE.	79
NUCLEAR-EMULSION	NUCLEAR-EMULSION GROUP. H. H. HECKMAN.	43
NUCLEI	GROUND-STATE MASSES OF EVEN-EVEN NUCLEI. C. F. TSANG.	10
NUCLEON-ANTINUCLEON	PARTIAL WIDTHS OF A HEAVY BOSON, T(2550) GOES TO PI-PI, NUCLEON-ANTINUCLEON. C. SCHMID.	5
NUCLEON-NUCLEON	NUCLEON-NUCLEON INTERACTIONS. W. CHINOWSKY, P. SCHMIDT, W. GAGE, AND S. KLEIN.	60
NUCLEON-NUCLEON	NUCLEON-NUCLEON SCATTERING POTENTIAL. J. BINSTOCK.	9
NUCLEON-NUCLEON	NUCLEON-NUCLEON TRIPLE SCATTERING. C. M. ANKENBRANDT, D. CHENG, L. T. KERTH, K. C. LEUNG, B. MACDONALD, AND P. SURKO.	46
NUCLEON-NUCLEON	SEPARABLE POTENTIAL FITS TO NUCLEON-NUCLEON SCATTERING DATA. T. R. MONGAN.	8
OLIVER	K-L-ZERO GOES TO 2 PI-ZERO. A. C. HELMHOLZ, R. W. KENNEY, I. R. LINSCOTT, B. J. MOYER, W. P. OLIVER, S. I. PARKER, C. A. REY, R. J. CENCE, B. D. JONES, V. Z. PETERSON, AND V. J. STENGER.	47
OMEGA	DECAY OMEGA GOES TO PI-PLUS PI-MINUS. S. M. FLATTE.	19
ON-LINE	ON-LINE SYSTEM. R. W. BIRGE AND P. W. WEBER.	55
ONG	STUDY OF INELASTIC EFFECTS IN P11-STATE PION-NUCLEON SCATTERING. K. M. ONG.	8
ORBIT	ORBIT STUDIES.	81
OSBORNE	EVENT ACCOUNTING. S. BUCKMAN, P. DAVIS, AND C. OSBORNE.	92
OSBORNE	HAZE -- SEMIAUTOMATIC EVENT MEASUREMENT. S. BUCKMAN, J. CRAWFORD, P. DAVIS, W. S. GEE, J. GREENE, C. OSBORNE, AND L. SHALZ.	91
OSBORNE	TRIST -- SYSTEM MONITOR. P. DAVIS AND C. OSBORNE.	92
OVERRELAXATION	NONLINEAR BLOCK-SUCCESSIVE OVERRELAXATION.	86
OXYGEN-16	A SEARCH FOR EXCITED LEVELS OF NITROGEN-15 PRODUCED BY MU-MINUS CAPTURE IN OXYGEN-16. S. N. KAPLAN, R. B. PYLE, AND L. E.	49
PACIOTTI	K-TWO-ZERO CHARGE ASYMMETRY. D. H. MILLER AND M. A. PACIOTTI.	40

PARDOE	MAY-NOVEMBER 1968 DATA-REDUCTION FORECAST. 1PROGRAMMING EFFORT. B. PARDOE.	32
PARKER	K-L-ZERO GOES TO 2 PI-ZERO. A. C. HELMHOLZ, R. W. KENNEY, I. R. LINSCOTT, B. J. MOYER, W. P. OLIVER, S. I. PARKER, C. A. REY, R. J. CENCE, B. D. JONES, V. Z. PETERSON, AND V. J. STENGER.	47
PARSONS	MEASUREMENT OF THE DIFFERENTIAL CROSS SECTION FOR PI-MINUS GOES TO NEUTRON GAMMA. R. P. HADDOCK, J. A. HELLAND, B. M. K. NEFKENS, A. S. L. PARSONS, P. TRUOEL, L. VERHEY, AND M. E. ZELLER.	39
PARSONS	PION FORM FACTOR. K. M. CROWE, A. S. L. PARSONS, AND M. A. FAINBERG.	39
PARTICLE	HIGH-ALTITUDE PARTICLE PHYSICS AND COSMIC-RAY EXPERIMENTAL FACILITY. L. W. ALVAREZ, P. M. DAUBER, L. J. LLOYD, L. H. SMITH, AND M. A. WAHLIG.	27
PARTICLE	PARTICLE IDENTIFIER. D. GREINER, R. ALBERT, AND H. HECKMAN.	43
PARTICLES	DATA ON PARTICLES AND RESONANT STATES. A. H. ROSENFELD, N. BARASH-SCHMIDT, A. BARBARO-GALTIERI, L. R. PRICE, P. SODING, AND C. G. WOHL.	36
PATTERSON	ENVIRONMENTAL RADIATION STUDIES. H. A. WOLLENBERG, A. R. SMITH, AND H. W. PATTERSON.	72
PATTERSON	HEALTH PHYSICS. H. W. PATTERSON.	71
PATTERSON	HIGH-ENERGY NEUTRON SPECTRUM MEASUREMENTS. H. H. HECKMAN AND H. W. PATTERSON.	44
PATTERSON	PUBLICATIONS -- PATTERSON.	73
PATTERSON	TRACK DETECTORS. H. A. WOLLENBERG AND H. W. PATTERSON.	71
PAUL	184-INCH CYCLOTRON REGENERATOR STUDIES. A. C. PAUL.	41
PDP-7	PDP-7, PDP-9 ASSEMBLER.	85
PDP-9	PDP-7, PDP-9 ASSEMBLER.	85
PDP5/8	PDP5/8 -- 6600 DATA LINK.	78
PENNY	SYSTEMS PROGRAMMING. E. R. BEALS, W. H. BENSON, J. R. BORGES, D. N. BRAINARD, W. F. DEMPSTER, R. L. FINK, J. E. GLASNER, W. H. HUTCHINSON, J. P. JOHNSON, J. A. KNIGHT, S. J. PENNY, D. F. STEVENS, AND R. E. TRACY.	84
PEREZ-MENDEZ	K-E4 EXPERIMENT. B. GAULD, V. PEREZ-MENDEZ, R. CENCE, B. D. JONES, R. MORGADO, M. PETERS, AND V. Z. PETERSON.	49
PEREZ-MENDEZ	MEASUREMENT OF NEUTRON PROTON GOES TO GAMMA DEUTERON ANGULAR DISTRIBUTION AS A DIRECT TEST OF TIME REVERSAL IN THE ELECTROMAGNETIC INTERACTION. D. CHENG, V. PEREZ-MENDEZ, J. M. SPERINDE, J. A. HELLAND, B. L. SCHROCK, R. P. HADDOCK, J. DETOUEF, M. J. LONGO, S. WILSON, AND K. K. YOUNG.	50
PEREZ-MENDEZ	PHOTOPRODUCTION OF VECTOR MESONS. L. KAUFMAN, V. PEREZ-MENDEZ, A. W. STETZ, S. H. WILLIAMS, A. BOYARSKI, F. BULOS, R. DIEBOLD, R. LARSEN, D. LEITH, B. RICHTER, AND W. BUSZA.	50
PEREZ-MENDEZ	PI-MINUS HE3 INTERACTIONS. J. SPERINDE, B. M. SMITH, L. KAUFMAN, AND V. PEREZ-MENDEZ.	51
PEREZ-MENDEZ	PI-MINUS HE4 INTERACTIONS. L. KAUFMAN, V. PEREZ-MENDEZ, AND J. SPERINDE.	51
PEREZ-MENDEZ	SPARK CHAMBERS FOR THE MEDICAL PROGRAM. L. KAUFMAN, V. PEREZ-MENDEZ, J. SPERINDE, A. RINDI, AND H. WOLLENBERG.	51

PEREZ-MENDEZ	WIRE SPARK CHAMBERS AND ELECTRONIC READOUTS. R. L. GROVE, G. L. STOKER, AND V. PEREZ-MENDEZ.	51
PERSONNEL	PROGRAMMING PERSONNEL.	32
PETERS	K-E4 EXPERIMENT. B. GAULD, V. PEREZ-MENDEZ, R. CENCE, B. D. JONES, R. MORGADO, M. PETERS, AND V. Z. PETERSON.	49
PETERSON	K-E4 EXPERIMENT. B. GAULD, V. PEREZ-MENDEZ, R. CENCE, B. D. JONES, R. MORGADO, M. PETERS, AND V. Z. PETERSON.	49
PETERSON	K-L-ZERO GOES TO 2 PI-ZERO. A. C. HELMHOLZ, R. W. KENNEY, I. R. LINSCOTT, B. J. MOYER, W. P. OLIVER, S. I. PARKER, C. A. REY, R. J. CENCE, B. D. JONES, V. Z. PETERSON, AND V. J. STENGER.	47
PHASE SHIFT	PHASE-SHIFT ANALYSIS OF CHARGED-PION PROTON ELASTIC-SCATTERING EXPERIMENTS. C. H. JOHNSON, JR., O. CHAMBERLAIN, R. FIELD, AND H. STEINER.	62
PHOTONS	HIGH-ENERGY PHOTOPRODUCTION WITH POLARIZED PHOTONS. R. L. THEWS.	6
PHOTOPEAK	PHOTOPEAK ANALYSIS OF SEMICONDUCTOR GAMMA-RAY SPECTRA BY COMPUTER. J. T. ROUTTI AND S. G. PRUSSIN.	72
PHOTOPRODUCTION	HIGH-ENERGY PHOTOPRODUCTION WITH POLARIZED PHOTONS. R. L. THEWS.	6
PHOTOPRODUCTION	PHOTOPRODUCTION OF VECTOR MESONS. L. KAUFMAN, V. PEREZ-MENDEZ, A. W. STETZ, S. H. WILLIAMS, A. BOYARSKI, F. BULOS, R. DIEBOLD, R. LARSEN, D. LEITH, B. RICHTER, AND W. BUSZA.	50
PHYSICS	EXPERIMENTAL PHYSICS. L. W. ALVAREZ.	17
PHYSICS	EXPERIMENTAL PHYSICS. K. M. CROWE AND D. H. MILLER.	39
PHYSICS	EXPERIMENTAL PHYSICS. E. J. LOFGREN.	45
PHYSICS	EXPERIMENTAL PHYSICS RESEARCH. B. J. MOYER AND A. C. HELMHOLZ.	47
PHYSICS	EXPERIMENTAL PHYSICS. W. M. POWELL AND R. W. BIRGE.	53
PHYSICS	EXPERIMENTAL PHYSICS. E. SEGRE AND O. CHAMBERLAIN.	59
PHYSICS	EXPERIMENTAL PHYSICS. G. H. TRILLING AND G. GOLDHABER.	67
PHYSICS	GENERAL THEORETICAL PHYSICS.	9
PHYSICS	HEALTH PHYSICS. H. W. PATTERSON.	71
PHYSICS	HIGH-ALTITUDE PARTICLE PHYSICS AND COSMIC-RAY EXPERIMENTAL FACILITY. L. W. ALVAREZ, P. M. DAUBER, L. J. LLOYD, L. H. SMITH, AND M. A. WAHLIG.	27
PHYSICS	LOFGREN PHYSICS PUBLICATIONS.	46
PHYSICS	LOW-ENERGY NUCLEAR PHYSICS.	10
PHYSICS	MANY-BODY PHYSICS.	11
PHYSICS	PHYSICS PROGRAMMING.	75
PHYSICS	PHYSICS RESEARCH STAFF.	107
PHYSICS	PROGRAMMING FOR LOFGREN PHYSICS GROUP. B. M. POWELL, J. P. TYSON, L. WILSON, AND D. H. ZURLINDEN.	78
PHYSICS	THEORETICAL PHYSICS. G. F. CHEW.	1
PI	ANALYSIS OF PI-HE SCATTERING FOR THE PION ELECTROMAGNETIC FORM FACTOR. C. T. MOTTERSHEAD.	9
PI	STOPPING-POWER DIFFERENCES OF CHARGED PI MESONS. H. H. HECKMAN.	44

PI-MINUS	COMPARISON OF THE LIFETIMES OF PI-PLUS AND PI-MINUS. D. S. AYRES, D. O. CALDWELL, A. M. CORMACK, V. B. ELINGS, A. J. GREENBERG, W. P. HESSE, R. W. KENNEY, AND R. J. MORRISON.	49
PI-MINUS	DECAY OMEGA GOES TO PI-PLUS PI-MINUS. S. M. FLATTE.	19
PI-MINUS	K-MINUS PROTON GOES TO LAMBDA PI-PLUS PI-MINUS AND K-MINUS PROTON GOES TO LAMBDA PLUS MISSING MASS. T. S. MAST, A. BARBARO-GALTIERI, AND R. D. TRIPP.	21
PI-MINUS	LRL-SLAC EXPERIMENT ON PI-MINUS PROTON INELASTIC REACTIONS. L. R. PRICE, A. H. ROSENFELD, P. SÖDING, D. HERNDON, R. LONGACRE, D. LEITH, A. BRODY, AND B. SHEN.	25
PI-MINUS	MEASUREMENT OF THE DIFFERENTIAL CROSS SECTION FOR PI-MINUS GOES TO NEUTRON GAMMA. R. P. HADDOCK, J. A. HELLAND, B. M. K. NEFKENS, A. S. L. PARSONS, P. TRUOEL, L. VERHEY, AND M. E. ZELLER.	39
PI-MINUS	PI-MINUS HE3 INTERACTIONS. J. SPERINDE, B. M. SMITH, L. KAUFMAN, AND V. PEREZ-MENDEZ.	51
PI-MINUS	PI-MINUS HE4 INTERACTIONS. L. KAUFMAN, V. PEREZ-MENDEZ, AND J. SPERINDE.	51
PI-MINUS	PI-MINUS PROTON INTERACTION AT 550 MEV/C. W. CHINOWSKY, P. SCHMIDT, AND W. GAGE.	61
PI-MINUS	POLARIZATION IN PI-PLUS PROTON AND PI-MINUS PROTON ELASTIC SCATTERING FROM 250 TO 410 MEV. W. GORN, C. C. MOREHOUSE, T. M. POWELL, P. R. ROBRISH, S. ROCK, S. SHANNON, H. STEINER, AND H. WEISBERG.	61
PI-MINUSPLUS	STUDY OF THE REACTION K-MINUS PROTON GOES TO SIGMA-PLUSMINUS PI-MINUSPLUS. P. M. DAUBER AND A. BARBARO-GALTIERI.	19
PI-PI	PARTIAL WIDTHS OF A HEAVY BOSON, T(2550) GOES TO PI-PI, NUCLEON-ANTINUCLEON. C. SCHMID.	5
PI-PLUS	COMPARISON OF THE LIFETIMES OF PI-PLUS AND PI-MINUS. D. S. AYRES, D. O. CALDWELL, A. M. CORMACK, V. B. ELINGS, A. J. GREENBERG, W. P. HESSE, R. W. KENNEY, AND R. J. MORRISON.	49
PI-PLUS	DECAY OMEGA GOES TO PI-PLUS PI-MINUS. S. M. FLATTE.	19
PI-PLUS	K-MINUS PROTON GOES TO LAMBDA PI-PLUS PI-MINUS AND K-MINUS PROTON GOES TO LAMBDA PLUS MISSING MASS. T. S. MAST, A. BARBARO-GALTIERI, AND R. D. TRIPP.	21
PI-PLUS	PI-PLUS DEUTERON INTERACTIONS FROM 1.1 TO 2.3 GEV/C. M. A. ABOLINS, O. I. DAHL, G. DANBURG, D. DAVIES, AND R. RADER.	23
PI-PLUS	PI-PLUS DEUTERON INTERACTIONS FROM 2.8 TO 4.2 GEV/C. M. A. ABOLINS, O. I. DAHL, AND P. HOCH.	22
PI-PLUS	PI-PLUS PROTON INTERACTIONS FROM 2.9 TO 4.1 GEV/C. D. G. BROWN, R. W. BIRGE, G. GIDAL, AND G. BORREANI.	54
PI-PLUS	PI-PLUS PROTON INTERACTION AT 3.7 GEV/C. W. R. BUTLER, D. G. COYNE, P. GAPOSCHKIN, AND J. MACNAUGHTON.	68
PI-PLUS	POLARIZATION IN PI-PLUS PROTON AND PI-MINUS PROTON ELASTIC SCATTERING FROM 250 TO 410 MEV. W. GORN, C. C. MOREHOUSE, T. M. POWELL, P. R. ROBRISH, S. ROCK, S. SHANNON, H. STEINER, AND H. WEISBERG.	61
PI-PLUS	REGGE-POLE MODEL WITH THE M = 1 PION IN PI-PLUS PROTON GOES TO RHO-ZERO DELTA-PLUSPLUS AND PI-PLUS PROTON GOES TO RHO-PLUS PROTON. F. ARBAB AND R. C. BROWER.	1
PI-PLUS	SEARCH FOR A 2PI-ZERO RESONANCE NEAR 730 MEV IN PI-PLUS DEUTERON INTERACTIONS. R. J. MANNING AND G. A. SMITH.	23

PI-PLUS	STUDY OF K-PLUS DECAY TO PI-PLUS PI-ZERO GAMMA. P. KIJEWSKI, D. CUTTS, M. DEUTSCH, R. STIENING, AND C. WIEGAND.	59
PI-PLUS	STUDY OF THE REACTION PI-PLUS PROTON GOES TO ETA-ZERO DELTA-PLUSPLUS. G. BORREANI, G. GIDAL, AND G. E. KALMUS.	55
PI-PLUS	STUDY OF THE STRANGE-PARTICLE CHANNELS IN PI-PLUS PROTON AT 1.34, 1.43, AND 1.68 GEV/C. G. BORREANI AND G. E. KALMUS.	55
PI-PLUS	TWO-PION EVENTS IN PI-PLUS PROTON FILM AT 1.35, 1.43, AND 1.68 GEV/C. R. W. BIRGE AND G. E. KALMUS.	55
PI-ZERO	ETA-ZERO DECAY AND PI-ZERO PI-ZERO NEUTRON EXPERIMENTS. T. B. RISSER, R. W. KENNEY, M. PRIPSTEIN, O. DAHL, AND M. A. WAHLIG.	47
PI-ZERO	K-L-ZERO GOES TO 2 PI-ZERO. A. C. HELMHOLZ, R. W. KENNEY, I. R. LINSCOTT, B. J. MOYER, W. P. OLIVER, S. I. PARKER, C. A. REY, R. J. CENCE, B. D. JONES, V. Z. PETERSON, AND V. J. STENGER.	47
PI-ZERO	K-MINUS PROTON GOES TO LAMBDA-ZERO PI-ZERO. R. P. ELY AND J. LOUIE.	53
PI-ZERO	MEASUREMENT OF THE PI-ZERO ENERGY SPECTRUM IN K-PLUS DECAY TO PI-ZERO MU-PLUS NEUTRINO. P. KIJEWSKI, D. CUTTS, M. DEUTSCH, R. STIENING, AND C. WIEGAND.	59
PI-ZERO	MUON POLARIZATION IN K-PLUS DECAY TO PI-ZERO MU-PLUS NEUTRINO (K-MU3-PLUS). M. DEUTSCH, R. STIENING, AND C. WIEGAND.	59
PI-ZERO	REACTIONS K-MINUS PROTON GOES TO ANTIK-ZERO NEUTRON AND K-MINUS PROTON GOES TO LAMBDA PI-ZERO. S. M. FLATTE, A. BARBARO-GALTIERI, R. D. TRIPP, AND C. G. WOHL.	19
PI-ZERO	STUDY OF K-PLUS DECAY TO PI-PLUS PI-ZERO GAMMA. P. KIJEWSKI, D. CUTTS, M. DEUTSCH, R. STIENING, AND C. WIEGAND.	59
PIGNOTTI	MULTIPERIPHERAL BOOTSTRAP MODEL FOR HIGH-ENERGY COLLISIONS. G. F. CHEW AND A. PIGNOTTI.	1
PIGNOTTI	PROTON-ANTIPROTON ANNIHILATION IN A MULTIPERIPHERAL MODEL. G. F. CHEW AND A. PIGNOTTI.	1
PION	ANALYSIS OF PI-HE SCATTERING FOR THE PION ELECTROMAGNETIC FORM FACTOR. C. T. MOTTERSHEAD.	9
PION	PION EXCHANGE AND FACTORIZATION. G. A. RINGLAND AND R. L. THEWS.	3
PION	PION FORM FACTOR. K. M. CROWE, A. S. L. PARSONS, AND M. A. FAINBERG.	39
PION	RADIATIVE PION PRODUCTION. F. S. CRAWFORD, L. R. PRICE, AND R. A. GROSSMAN.	17
PION	REGGE-POLE MODEL WITH THE M = 1 PION IN PI-PLUS PROTON GOES TO RHO-ZERO DELTA-PLUSPLUS AND PI-PLUS PROTON GOES TO RHO-PLUS PROTON. F. ARBAB AND R. C. BROWER.	1
PION-NUCLEON	FINITE-ENERGY SUM RULES FOR BACKWARD PION-NUCLEON SCATTERING. H. LEE.	4
PION-NUCLEON	STUDY OF INELASTIC EFFECTS IN P11-STATE PION-NUCLEON SCATTERING. K. M. ONG.	8
PION-PION	PION-PION S-WAVE INTERACTION. K. M. CROWE, T. MAUNG, AND N. DAIRIKI.	40
PIONIC	PIONIC ATOMS. R. KUNSELMAN AND G. A. GRIN.	61

PIONIC	REGGE-POLE FORMALISM FOR PIONIC DISINTEGRATION OF THE DEUTERON. H. LEE.	8
PIONS	DIBOSON PRODUCTION BY 2-TO-5-GEV/C PIONS. A. R. CLARK, B. CORK, T. ELIOFF, L. T. KERTH, T. N. RANGASWAMY, AND W. A. WENZEL.	45
PI63	PI63 EXPERIMENT.	18
PI66	PI66 EXPERIMENT.	22
PNTFLD	PNTFLD.	78
PODOLSKY	BACKSCATTERED LASER BEAM AT SLAC. W. PODOLSKY, A. H. ROSENFELD, P. SÖDING, R. D. TRIPP, AND M. S. RABIN, J. J. MURRAY, P. KLEIN, AND C. SINCLAIR.	26
POLARIZATION	MUON POLARIZATION IN K-PLUS DECAY TO PI-ZERO MU-PLUS NEUTRINO (K-MU3-PLUS). M. DEUTSCH, R. STIENING, AND C. WIEGAND.	59
POLARIZATION	POLARIZATION IN PI-PLUS PROTON AND PI-MINUS PROTON ELASTIC SCATTERING FROM 250 TO 410 MEV. W. GORN, C. C. MOREHOUSE, T. M. POWELL, P. R. ROBRISH, S. ROCK, S. SHANNON, H. STEINER, AND H. WEISBERG.	61
POLARIZED	HIGH-ENERGY PHOTOPRODUCTION WITH POLARIZED PHOTONS. R. L. THEWS.	6
POLARIZED-PROTON	POLARIZED-PROTON TARGET IMPROVEMENTS. O. CHAMBERLAIN, W. GORN, C. MOREHOUSE, T. POWELL, P. ROBRISH, S. ROCK, S. SHANNON, G. SHAPIRO, AND H. WEISBERG.	63
POLYATOMIC	BOLTZMANN EQUATION FOR POLYATOMIC GAS. W. WOLLMAN.	12
POLYNOMIALS	BOUND -- FOR ROOTS OF POLYNOMIALS.	86
POMERANCHON	POMERANCHON AS A NONSENSE-CHOOSING REGGE TRAJECTORY. C. I. TAN.	3
POWELL	ACCELERATOR AND MAGNET DESIGN PROGRAMS. R. AHLSTRAND, V. O. BRADY, B. R. BURKHART, E. R. CLOSE, J. S. COLONIAS, R. N. HEALEY, B. S. LEVINE, B. M. POWELL, AND S. J. SACKETT.	80
POWELL	EXPERIMENTAL PHYSICS. W. M. POWELL AND R. W. BIRGE.	53
POWELL	POLARIZATION IN PI-PLUS PROTON AND PI-MINUS PROTON ELASTIC SCATTERING FROM 250 TO 410 MEV. W. GORN, C. C. MOREHOUSE, T. M. POWELL, P. R. ROBRISH, S. ROCK, S. SHANNON, H. STEINER, AND H. WEISBERG.	61
POWELL	POLARIZED-PROTON TARGET IMPROVEMENTS. O. CHAMBERLAIN, W. GORN, C. MOREHOUSE, T. POWELL, P. ROBRISH, S. ROCK, S. SHANNON, G. SHAPIRO, AND H. WEISBERG.	63
POWELL	PROGRAMMING FOR LOFGREN PHYSICS GROUP. B. M. POWELL, J. P. TYSON, L. WILSON, AND D. H. ZURLINDEN.	78
POWELL	PUBLICATIONS -- POWELL-BIRGE.	57
POWELL	25-INCH HYDROGEN BUBBLE CHAMBER. W. M. POWELL AND G. J. ECKMAN.	53
POWELL-BIRGE	PROGRAMMING FOR POWELL-BIRGE GROUP. H. C. ALBRECHT, H. HANERFELD, M. H. MYERS, J. TYSON, AND J. VISSER,	75
POWELL-BIRGE	25-INCH HYDROGEN BUBBLE-CHAMBER RUN. POWELL-BIRGE GROUP.	53
PRICE	DATA ON PARTICLES AND RESONANT STATES. A. H. ROSENFELD, N. BARASH-SCHMIDT, A. BARBARO-GALTIERI, L. R. PRICE, P. SÖDING, AND C. G. WOHL.	36
PRICE	LEPTONIC DECAYS OF ETA MESONS. F. S. CRAWFORD, L. R. PRICE, AND R. A. GROSSMAN.	17
PRICE	LRL-SLAC EXPERIMENT ON PI-MINUS PROTON INELASTIC REACTIONS. L. R. PRICE, A. H. ROSENFELD, P. SÖDING, D. HERNDON, R. LONGACRE, D. LEITH, A. BRODY, AND B. SHEN.	25

PRICE	PRODUCTION OF ETA MESONS. F. S. CRAWFORD, L. R. PRICE, AND R. A. GROSSMAN.	17
PRICE	RADIATIVE ELECTROPRODUCTION. F. S. CRAWFORD, L. R. PRICE, AND R. A. GROSSMAN.	18
PRICE	RADIATIVE PION PRODUCTION. F. S. CRAWFORD, L. R. PRICE, AND R. A. GROSSMAN.	17
PRIPSTEIN	D66 EXPERIMENT. P. EBERHARD, G. R. LYNCH, AND M. PRIPSTEIN.	24
PRIPSTEIN	ETA-ZERO DECAY AND PI-ZERO PI-ZERO NEUTRON EXPERIMENTS. T. B. RISSER, R. W. KENNEY, M. PRIPSTEIN, O. DAHL, AND M. A. WAHLIG.	47
PRIPSTEIN	NEUTRAL DECAY MODES OF THE ETA MESON. O. I. DAHL, M. PRIPSTEIN, AND M. WAHLIG.	26
PRIPSTEIN	NEUTRAL DIBOSON EXPERIMENT. O. I. DAHL, M. PRIPSTEIN, AND M. WAHLIG.	27
PRIPSTEIN	PRODUCTION OF SIGMAS IN K-MINUS PROTON INTERACTIONS. M. PRIPSTEIN AND P. EBERHARD.	19
PROGRAM	COMPUTER PROGRAM DEVELOPMENT.	91
PROGRAM	PROGRAM IN COLLABORATION WITH MOYER-HELMHOLZ GROUP.	26
PROGRAM	SPARK CHAMBERS FOR THE MEDICAL PROGRAM. L. KAUFMAN, V. PEREZ-MENDEZ, J. SPERINDE, A. RINDI, AND H. WOLLENBERG.	51
PROGRAMMING	NUCLEAR CHEMISTRY PROGRAMMING. N. BROWN, P. A. COLLOM, G. LITTON, AND C. E. RUGGE.	79
PROGRAMMING	OTHER PROGRAMMING NOTES WRITTEN DURING THIS PERIOD.	35
PROGRAMMING	PHYSICS PROGRAMMING.	75
PROGRAMMING	PROGRAMMING FOR LOFGREN PHYSICS GROUP. B. M. POWELL, J. P. TYSON, L. WILSON, AND D. H. ZURLINDEN.	78
PROGRAMMING	PROGRAMMING FOR MOYER-HELMHOLZ GROUP. RUTH HINKINS.	78
PROGRAMMING	PROGRAMMING FOR POWELL-BIRGE GROUP. H. C. ALBRECHT, H. HANERFELD, M. H. MYERS, J. TYSON, AND J. VISSER,	75
PROGRAMMING	PROGRAMMING FOR TRILLING-GOLDHABER GROUP. D. ARMSTRONG, E. R. BURNS, B. H. HALL, D. P. LAMB, AND J. G. MILLER.	77
PROGRAMMING	PROGRAMMING PERSONNEL.	32
PROGRAMMING	SYSTEMS PROGRAMMING. E. R. BEALS, W. H. BENSON, J. R. BORGES, D. N. BRAINARD, W. F. DEMPSTER, R. L. FINK, J. E. GLASNER, W. H. HUTCHINSON, J. P. JOHNSON, J. A. KNIGHT, S. J. PENNY, D. F. STEVENS, AND R. E. TRACY.	84
PROGRAMS	ACCELERATOR AND MAGNET DESIGN PROGRAMS. R. AHLSTRAND, V. O. BRADY, B. R. BURKHART, E. R. CLOSE, J. S. COLONIAS, R. N. HEALEY, B. S. LEVINE, B. M. POWELL, AND S. J. SACKETT.	80
PROGRAMS	BIOMEDICAL-APPLICATIONS PROGRAMS. E. H. COLEMAN, R. HINKINS, W. D. HOGAN, M. W. HOROVITZ, G. M. LITTON, T. F. MAHAN, M. C. SIMMONS, AND K. G. WILEY.	81
PROGRAMS	DATA-ANALYSIS PROGRAMS.	33
PROGRAMS	DATA-EDITING PROGRAMS.	33
PROGRAMS	HEAVY-ION-STUDIES PROGRAMS.	79
PROGRAMS	LIBRARY-FUNCTION PROGRAMS.	34
PROGRAMS	MISCELLANEOUS PROGRAMS. R. A. BELSHE, M. L. CLINNICK, E. A. COLEMAN, J. P. TYSON, D. F. STEVENS, D. A. WILBER, AND E. E. WILLIAMS.	82

PROGRAMS	SPARK-CHAMBER PROGRAMS.	35
PROGRAMS	SPECTRAL-ANALYSIS PROGRAMS.	80
PROGRAMS	SPIRAL-READER PROGRAMS.	34
PROPERTIES	AVERAGE NUCLEAR PROPERTIES. W. D. MEYERS AND W. J. SWIATECKI.	11
PROPERTIES	SELF-CONSISTENT SYMMETRY PROPERTIES OF FINITE-ENERGY SUM RULES. C. SCHMID AND J. YELLIN WITH J. SHAPIRO AND K. BITAR.	5
PROTON	ANTIPROTON-PROTON INTERACTIONS. M. MANDELKERN, W. CHINOWSKY, R. BURNS, P. CONDON, J. SCHULTZ, AND P. SCHMIDT.	61
PROTON	K-MINUS PROTON GOES TO LAMBDA PI-PLUS PI-MINUS AND K-MINUS PROTON GOES TO LAMBDA PLUS MISSING MASS. T. S. MAST, A. BARBARO-GALTIERI, AND R. D. TRIPP.	21
PROTON	K-MINUS PROTON GOES TO LAMBDA-ZERO PI-ZERO. R. P. ELY AND J. LOUIE.	53
PROTON	K-PLUS PROTON INTERACTIONS AT 9 GEV/C. G. ALEXANDER, A. FIRESTONE, C. M. FU, AND G. GOLDHABER.	69
PROTON	LAMBDA-ZERO PROTON INTERACTIONS. J. A. KADYK, G. H. TRILLING, P. GAPOSCHKIN, G. ALEXANDER, R. A. HESS, S. R. G. FANG, AND F. M. HAMZEH.	67
PROTON	LOW-ENERGY K-MINUS PROTON INTERACTIONS. J. H. CHAN AND J. A. KADYK.	67
PROTON	LRL-SLAC EXPERIMENT ON PI-MINUS PROTON INELASTIC REACTIONS. L. R. PRICE, A. H. ROSENFELD, P. SÖDING, D. HERNDON, R. LONGACRE, D. LEITH, A. BRODY, AND B. SHEN.	25
PROTON	MEASUREMENT OF NEUTRON PROTON GOES TO GAMMA DEUTERON ANGULAR DISTRIBUTION AS A DIRECT TEST OF TIME REVERSAL IN THE ELECTROMAGNETIC INTERACTION. D. CHENG, V. PEREZ-MENDEZ, J. M. SPERINDE, J. A. HELLAND, B. L. SCHROCK, R. P. HADDOCK, J. DETOUEF, M. J. LONGO, S. WILSON, AND K. K. YOUNG.	50
PROTON	PHASE-SHIFT ANALYSIS OF CHARGED-PION PROTON ELASTIC-SCATTERING EXPERIMENTS. C. H. JOHNSON, JR., O. CHAMBERLAIN, R. FIELD, AND H. STEINER.	62
PROTON	PI-MINUS PROTON INTERACTION AT 550 MEV/C. W. CHINOWSKY, P. SCHMIDT, AND W. GAGE.	61
PROTON	PI-PLUS PROTON INTERACTIONS FROM 2.9 TO 4.1 GEV/C. D. G. BROWN, R. W. BIRGE, G. GIDAL, AND G. BORREANI.	54
PROTON	PI-PLUS PROTON INTERACTION AT 3.7 GEV/C. W. R. BUTLER, D. G. COYNE, P. GAPOSCHKIN, AND J. MACNAUGHTON.	68
PROTON	POLARIZATION IN PI-PLUS PROTON AND PI-MINUS PROTON ELASTIC SCATTERING FROM 250 TO 410 MEV. W. GORN, C. C. MOREHOUSE, T. M. POWELL, P. R. ROBRISH, S. ROCK, S. SHANNON, H. STEINER, AND H. WEISBERG.	61
PROTON	PRODUCTION OF SIGMAS IN K-MINUS PROTON INTERACTIONS. M. PRIPSTEIN AND P. EBERHARD.	19
PROTON	PROTON-ANTIPROTON ANNIHILATION IN A MULTIPERIPHERAL MODEL. G. F. CHEW AND A. PIGNOTTI.	1
PROTON	REACTION K-MINUS PROTON GOES TO K-STAR-SUB-HALF(892) K-STAR-SUB-THREEHALVES(1238). J. H. FRIEDMAN AND R. R. ROSS.	19
PROTON	REACTIONS K-MINUS PROTON GOES TO ANTIK-ZERO NEUTRON AND K-MINUS PROTON GOES TO LAMBDA PI-ZERO. S. M. FLATTE, A. BARBARO-GALTIERI, R. D. TRIPP, AND C. G. WOHL.	19

PROTON	REGGE-POLE MODEL WITH THE M = 1 PION IN PI-PLUS PROTON GOES TO RHO-ZERO DELTA-PLUSPLUS AND PI-PLUS PROTON GOES TO RHO-PLUS PROTON. F. ARBAB AND R. C. BROWER.	1
PROTON	SEARCH FOR T VIOLATION IN INELASTIC ELECTRON-PROTON SCATTERING. O. CHAMBERLAIN, G. SHAPIRO, H. L. WEISBERG, P. R. ROBRISH, S. ROCK, S. SHANNON, R. TAYLOR, L. MO, E. BLOOM, J. LITT, H. KENDALL, AND J. FRIEDMAN.	62
PROTON	STUDY OF K-MINUS PROTON FOUR-PRONGED REACTIONS. J. H. FRIEDMAN, R. R. ROSS, AND A. KIRSCHBAUM.	20
PROTON	STUDY OF THE REACTION PI-PLUS PROTON GOES TO ETA-ZERO DELTA-PLUSPLUS. G. BORREANI, G. GIDAL, AND G. E. KALMUS.	55
PROTON	STUDY OF THE REACTION K-MINUS PROTON GOES TO SIGMA-PLUSMINUS PI-MINUSPLUS. P. M. DAUBER AND A. BARBARO-GALTIERI.	19
PROTON	STUDY OF THE STRANGE-PARTICLE CHANNELS IN PI-PLUS PROTON AT 1.34, 1.43, AND 1.68 GEV/C. G. BORREANI AND G. E. KALMUS.	55
PROTON	TWO-PION EVENTS IN PI-PLUS PROTON FILM AT 1.35, 1.43, AND 1.68 GEV/C. R. W. BIRGE AND G. E. KALMUS.	55
PROTON-HE	PROTON-HE SCATTERING EXPERIMENT. A. W. STETZ.	50
PROTON-PROTON	NONSTRANGE INTERACTIONS IN PROTON-PROTON COLLISIONS AT 6.6 GEV/C. E. GELLERT AND G. A. SMITH.	24
PROTON-PROTON	STRANGE-PARTICLE INTERACTIONS IN PROTON-PROTON COLLISIONS AT 5.5 AND 6.6 GEV/C. A. B. WICKLUND AND G. A. SMITH.	25
PROTONS	TEMPORAL CHANGES IN THE INNER-BELT PROTONS. H. H. HECKMAN AND G. H. NAKANO.	43
PRUSSIN	PHOTOPEAK ANALYSIS OF SEMICONDUCTOR GAMMA-RAY SPECTRA BY COMPUTER. J. T. ROUTTI AND S. G. PRUSSIN.	72
PSEUDOTHRESHOLD	EFFECTS OF PSEUDOTHRESHOLD CONSTRAINTS ON REGGE FITS. R. D. MATHEWS.	6
PSGLOP	PSGLOP.	79
PSORBT	PSORBT.	79
PUBLICATIONS	ACCELERATOR-STUDY PUBLICATIONS -- LOFGREN.	100
PUBLICATIONS	BEVATRON PUBLICATIONS -- LOFGREN.	103
PUBLICATIONS	LOFGREN PHYSICS PUBLICATIONS.	46
PUBLICATIONS	PUBLICATIONS -- ALVAREZ.	36
PUBLICATIONS	PUBLICATIONS -- BAKER.	88
PUBLICATIONS	PUBLICATIONS -- CHEW.	13
PUBLICATIONS	PUBLICATIONS -- HECKMAN.	44
PUBLICATIONS	PUBLICATIONS -- MOYER-HELMHOLZ.	52
PUBLICATIONS	PUBLICATIONS -- PATTERSON.	73
PUBLICATIONS	PUBLICATIONS -- POWELL-BIRGE.	57
PUBLICATIONS	PUBLICATIONS -- SEGRE-CHAMBERLAIN.	63
PUBLICATIONS	PUBLICATIONS -- SHUGART.	65
PUBLICATIONS	PUBLICATIONS -- TRILLING-GOLDHABER.	70
PYLE	A SEARCH FOR EXCITED LEVELS OF NITROGEN-15 PRODUCED BY MU-MINUS CAPTURE IN OXYGEN-16. S. N. KAPLAN, R. B. PYLE, AND L. E.	49

P11-STATE	STUDY OF INELASTIC EFFECTS IN P11-STATE PION-NUCLEON SCATTERING. K. M. ONG.	8
P65	P65 EXPERIMENT.	24
P67	P67 EXPERIMENT. M. A. ABOLINS, A. RITTENBERG, AND G. A. SMITH.	24
QUASILINEAR	QUASILINEAR EVOLUTION OF THE WEIBEL-KAHN INSTABILITY. N. ALBRIGHT.	11
R-SUB-HALF(892)	REACTION K-MINUS PROTON GOES TO K-STAR-SUB-HALF(892) K-STAR-SUB-THREEHALVES(1238). J. H. FRIEDMAN AND R. R. ROSS.	19
RABIN	BACKSCATTERED LASER BEAM AT SLAC. W. PODOLSKY, A. H. ROSENFELD, P. SÖDING, R. D. TRIPP, AND M. S. RABIN, J. J. MURRAY, P. KLEIN, AND C. SINCLAIR.	26
RABIN	K82 EXPERIMENT. S. M. FLATTE, J. H. FRIEDMAN, A. BARBARO-GALTIERI, M. ALSTON-GARNJOST, G. R. LYNCH, M. S. RABIN, F. T. SOLMITZ, P. DAVIS, AND V. WALUCH.	26
RADER	PI-PLUS DEUTERON INTERACTIONS FROM 1.1 TO 2.3 GEV/C. M. A. ABOLINS, O. I. DAHL, G. DANBURG, D. DAVIES, AND R. RADER.	23
RADIATION	ENVIRONMENTAL RADIATION STUDIES. H. A. WOLLENBERG, A. R. SMITH, AND H. W. PATTERSON.	72
RADIATIVE	RADIATIVE ELECTROPRODUCTION. F. S. CRAWFORD, L. R. PRICE, AND R. A. GROSSMAN.	18
RADIATIVE	RADIATIVE PION PRODUCTION. F. S. CRAWFORD, L. R. PRICE, AND R. A. GROSSMAN.	17
RADIO-FREQUENCY	MODEL OF RADIO-FREQUENCY SYSTEM FOR IMPROVEMENT OF 184-INCH CYCLOTRON. L. KANSTEIN.	105
RADIO-FREQUENCY	RADIO-FREQUENCY SYSTEMS.	95
RADIOGEOLOGY	RADIOGEOLOGY. H. A. WOLLENBERG AND A. R. SMITH.	73
RANGASWAMY	DIBOSON PRODUCTION BY 2-TO-5-GEV/C PIONS. A. R. CLARK, B. CORK, T. ELIOFF, L. T. KERTH, T. N. RANGASWAMY, AND W. A. WENZEL.	45
REACTION	REACTION K-MINUS PROTON GOES TO K-STAR-SUB-HALF(892) K-STAR-SUB-THREEHALVES(1238). J. H. FRIEDMAN AND R. R. ROSS.	19
REACTION	STUDY OF THE REACTION PI-PLUS PROTON GOES TO ETA-ZERO DELTA-PLUSPLUS. G. BORREANI, G. GIDAL, AND G. E. KALMUS.	55
REACTION	STUDY OF THE REACTION K-MINUS PROTON GOES TO SIGMA-PLUSMINUS PI-MINUSPLUS. P. M. DAUBER AND A. BARBARO-GALTIERI.	19
REACTIONS	CHARGE-EXCHANGE (K-MINUS PROTON GOES TO ANTIK-ZERO NEUTRON) AND ELASTIC (K-MINUS PROTON GOES TO K-MINUS PROTON) REACTIONS. T. S. MAST, R. BANGERTER, A. BARBARO-GALTIERI, AND R. D. TRIPP.	22
REACTIONS	LRL-SLAC EXPERIMENT ON PI-MINUS PROTON INELASTIC REACTIONS. L. R. PRICE, A. H. ROSENFELD, P. SODING, D. HERNDON, R. LONGACRE, D. LEITH, A. BRODY, AND B. SHEN.	25
REACTIONS	REACTIONS K-MINUS PROTON GOES TO ANTIK-ZERO NEUTRON AND K-MINUS PROTON GOES TO LAMBDA PI-ZERO. S. M. FLATTE, A. BARBARO-GALTIERI, R. D. TRIPP, AND C. G. WOHL.	19
REACTIONS	STUDY OF K-MINUS PROTON FOUR-PRONGED REACTIONS. J. H. FRIEDMAN, R. R. ROSS, AND A. KIRSCHBAUM.	20
READOUTS	WIRE SPARK CHAMBERS AND ELECTRONIC READOUTS. R. L. GROVE, G. L. STOKER, AND V. PEREZ-MENDEZ.	51

RECONSTRUCTION	FOG -- GEOMETRY AND SPACE RECONSTRUCTION. S. BUCKMAN, J. FRANZ, AND F. WINDORSKI.	91
REDUCTION	DATA REDUCTION. R. W. BIRGE AND P. W. WEBER.	56
REGENERATOR	184-INCH CYCLOTRON REGENERATOR STUDIES. A. C. PAUL.	41
REGGE	EFFECTS OF PSEUDOTHRESHOLD CONSTRAINTS ON REGGE FITS. R. D. MATHEWS.	6
REGGE	POMERANCHON AS A NONSENSE-CHOOSING REGGE TRAJECTORY. C. I. TAN.	3
REGGE-POLE	REGGE-POLE FORMALISM FOR PIONIC DISINTEGRATION OF THE DEUTERON. H. LEE.	8
REGGE-POLE	REGGE-POLE MODEL WITH THE M = 1 PION IN PI-PLUS PROTON GOES TO RHO-ZERO DELTA-PLUSPLUS AND PI-PLUS PROTON GOES TO RHO-PLUS PROTON. F. ARBAB AND R. C. BROWER.	1
RESONANCE	HIGH-ORDER RESONANCE FOR DUFFING'S DIFFERENTIAL EQUATION.	87
RESONANCE	SEARCH FOR A 2PI-ZERO RESONANCE NEAR 730 MEV IN PI-PLUS DEUTERON INTERACTIONS. R. J. MANNING AND G. A. SMITH.	23
RESONANT	DATA ON PARTICLES AND RESONANT STATES. A. H. ROSENFELD, N. BARASH-SCHMIDT, A. BARBARO-GALTIERI, L. R. PRICE, P. SÖDING, AND C. G. WOHL.	36
REY	K-L-ZERO GOES TO 2 PI-ZERO. A. C. HELMHOLZ, R. W. KENNEY, I. R. LINSCOTT, B. J. MOYER, W. P. OLIVER, S. I. PARKER, C. A. REY, R. J. CENCE, B. D. JONES, V. Z. PETERSON, AND V. J. STENGER.	47
RHO-PLUS	REGGE-POLE MODEL WITH THE M = 1 PION IN PI-PLUS PROTON GOES TO RHO-ZERO DELTA-PLUSPLUS AND PI-PLUS PROTON GOES TO RHO-PLUS PROTON. F. ARBAB AND R. C. BROWER.	1
RHO-ZERO	REGGE-POLE MODEL WITH THE M = 1 PION IN PI-PLUS PROTON GOES TO RHO-ZERO DELTA-PLUSPLUS AND PI-PLUS PROTON GOES TO RHO-PLUS PROTON. F. ARBAB AND R. C. BROWER.	1
RHODES	COMPUTER OPERATIONS. P. A. RHODES AND F. M. ATCHLEY.	88
RICHTER	PHOTOPRODUCTION OF VECTOR MESONS. L. KAUFMAN, V. PEREZ-MENDEZ, A. W. STETZ, S. H. WILLIAMS, A. BOYARSKI, F. BULOS, R. DIEBOLD, R. LARSEN, D. LEITH, B. RICHTER, AND W. BUSZA.	50
RINDI	ANALYSIS OF ERRORS IN THE EVALUATION OF FLUX AND DOSE. A. RINDI.	72
RINDI	SPARK CHAMBER. A. RINDI AND H. WOLLENBERG.	73
RINDI	SPARK CHAMBERS FOR THE MEDICAL PROGRAM. L. KAUFMAN, V. PEREZ-MENDEZ, J. SPERINDE, A. RINDI, AND H. WOLLENBERG.	51
RING	ELECTRON RING ACCELERATOR.	99
RINGLAND	FINITE WIDTHS AND ANGULAR DISTRIBUTIONS. G. A. RINGLAND AND R. L. THEWS.	6
RINGLAND	PION EXCHANGE AND FACTORIZATION. G. A. RINGLAND AND R. L. THEWS.	3
RINGLAND	RELATIONS BETWEEN SPIN DENSITY MATRIX ELEMENTS. G. A. RINGLAND AND R. L. THEWS.	6
RISSER	ETA-ZERO DECAY AND PI-ZERO PI-ZERO NEUTRON EXPERIMENTS. T. B. RISSER, R. W. KENNEY, M. PRIPSTEIN, O. DAHL, AND M. A. WAHLIG.	47
RITTENBERG	K-MINUS INTERACTIONS IN DEUTERIUM. A. BARBARO-GALTIERI, M. MATISON, AND A. RITTENBERG.	20

RITTENBERG	P67 EXPERIMENT. M. A. ABOLINS, A. RITTENBERG, AND G. A. SMITH.	24
ROBRISH	POLARIZATION IN PI-PLUS PROTON AND PI-MINUS PROTON ELASTIC SCATTERING FROM 250 TO 410 MEV. W. GORN, C. C. MOREHOUSE, T. M. POWELL, P. R. ROBRISH, S. ROCK, S. SHANNON, H. STEINER, AND H. WEISBERG.	61
ROBRISH	POLARIZED-PROTON TARGET IMPROVEMENTS. O. CHAMBERLAIN, W. GORN, C. MOREHOUSE, T. POWELL, P. ROBRISH, S. ROCK, S. SHANNON, G. SHAPIRO, AND H. WEISBERG.	63
ROBRISH	SEARCH FOR T VIOLATION IN INELASTIC ELECTRON-PROTON SCATTERING. O. CHAMBERLAIN, G. SHAPIRO, H. L. WEISBERG, P. R. ROBRISH, S. ROCK, S. SHANNON, R. TAYLOR, L. MO, E. BLOOM, J. LITT, H. KENDALL, AND J. FRIEDMAN.	62
ROCK	POLARIZATION IN PI-PLUS PROTON AND PI-MINUS PROTON ELASTIC SCATTERING FROM 250 TO 410 MEV. W. GORN, C. C. MOREHOUSE, T. M. POWELL, P. R. ROBRISH, S. ROCK, S. SHANNON, H. STEINER, AND H. WEISBERG.	61
ROCK	POLARIZED-PROTON TARGET IMPROVEMENTS. O. CHAMBERLAIN, W. GORN, C. MOREHOUSE, T. POWELL, P. ROBRISH, S. ROCK, S. SHANNON, G. SHAPIRO, AND H. WEISBERG.	63
ROCK	SEARCH FOR T VIOLATION IN INELASTIC ELECTRON-PROTON SCATTERING. O. CHAMBERLAIN, G. SHAPIRO, H. L. WEISBERG, P. R. ROBRISH, S. ROCK, S. SHANNON, R. TAYLOR, L. MO, E. BLOOM, J. LITT, H. KENDALL, AND J. FRIEDMAN.	62
ROOTS	BOUND -- FOR ROOTS OF POLYNOMIALS.	86
ROSENFELD	BACKSCATTERED LASER BEAM AT SLAC. W. PODOLSKY, A. H. ROSENFELD, P. SÖDING, R. D. TRIPP, AND M. S. RABIN, J. J. MURRAY, P. KLEIN, AND C. SINCLAIR.	26
ROSENFELD	DATA ON PARTICLES AND RESONANT STATES. A. H. ROSENFELD, N. BARASH-SCHMIDT, A. BARBARO-GALTIERI, L. R. PRICE, P. SÖDING, AND C. G. WOHL.	36
ROSENFELD	LRL-SLAC EXPERIMENT ON PI-MINUS PROTON INELASTIC REACTIONS. L. R. PRICE, A. H. ROSENFELD, P. SODING, D. HERNDON, R. LONGACRE, D. LEITH, A. BRODY, AND B. SHEN.	25
ROSS	CHARGE ASYMMETRY IN K-MU3-ZERO DECAYS. R. J. BUDNITZ, R. L. MCCARTHY, D. H. MILLER, AND W. N. ROSS.	40
ROSS	FLUX AMPLIFIER. P. EBERHARD AND R. ROSS.	29
ROSS	REACTION K-MINUS PROTON GOES TO K-STAR-SUB-HALF(892) K-STAR-SUB-THREEHALVES(1238). J. H. FRIEDMAN AND R. R. ROSS.	19
ROSS	STUDY OF K-MINUS PROTON FOUR-PRONGED REACTIONS. J. H. FRIEDMAN, R. R. ROSS, AND A. KIRSCHBAUM.	20
ROTATING	HEAT TRANSFER THROUGH A THIN ROTATING NUCLEAR TARGET.	86
ROUTTI	GRAPHICAL TECHNIQUE FOR ESTIMATING ACTIVITY LEVELS PRODUCED IN THERMAL-NEUTRON AND FISSION-NEUTRON IRRADIATION. J. T. ROUTTI.	72
ROUTTI	PHOTOPEAK ANALYSIS OF SEMICONDUCTOR GAMMA-RAY SPECTRA BY COMPUTER. J. T. ROUTTI AND S. G. PRUSSIN.	72
RUGGE	NUCLEAR CHEMISTRY PROGRAMMING. N. BROWN, P. A. COLLOM, G. LITTON, AND C. E. RUGGE.	79
RUTH	PROGRAMMING FOR MOYER-HELMHOLZ GROUP. RUTH HINKINS.	78
S-MATRIX	NEW ASYMPTOTIC EXPANSION OF THE S-MATRIX. G. L. TINDLE.	6
S-OPERATOR	S-OPERATOR THEORY OF WEAK INTERACTIONS. W. BIERTER.	9

S-WAVE	PION-PION S-WAVE INTERACTION. K. M. CROWE, T. MAUNG, AND N. DAIRIKI.	40
SACKETT	ACCELERATOR AND MAGNET DESIGN PROGRAMS. R. AHLSTRAND, V. O. BRADY, B. R. BURKHART, E. R. CLOSE, J. S. COLONIAS, R. N. HEALEY, B. S. LEVINE, B. M. POWELL, AND S. J. SACKETT.	80
SCANNING	DAPR -- FULLY AUTOMATIC EVENT SCANNING AND MEASUREMENT. B. BRITTON, J. CRAWFORD, J. FRANZ, W. S. GEE, D. HALL, N. JONTULOVIC, H. WHITE, AND F. WINDORSKI.	92
SCANNING	SCANNING DISTRIBUTION.	30
SCANNING	SCANNING.	29
SCATTERING	ANALYSIS OF PI-HE SCATTERING FOR THE PION ELECTROMAGNETIC FORM FACTOR. C. T. MOTTERSHEAD.	9
SCATTERING	CURRENT ALGEBRA AND LOW-ENERGY MESON-BARYON SCATTERING. P. SHERS.	7
SCATTERING	FINITE-ENERGY SUM RULES FOR BACKWARD PION-NUCLEON SCATTERING. H. LEE.	4
SCATTERING	K-MINUS DEUTERON AND K-MINUS NEUTRON ELASTIC SCATTERING. G. E. KALMUS AND N. JEW.	54
SCATTERING	NUCLEON-NUCLEON SCATTERING POTENTIAL. J. BINSTOCK.	9
SCATTERING	NUCLEON-NUCLEON TRIPLE SCATTERING. C. M. ANKENBRANDT, D. CHENG, L. T. KERTH, K. C. LEUNG, B. MACDONALD, AND P. SURKO.	46
SCATTERING	PROTON-HE SCATTERING EXPERIMENT. A. W. STETZ.	50
SCATTERING	SEARCH FOR T VIOLATION IN INELASTIC ELECTRON-PROTON SCATTERING. O. CHAMBERLAIN, G. SHAPIRO, H. L. WEISBERG, P. R. ROBRISH, S. ROCK, S. SHANNON, R. TAYLOR, L. MO, E. BLOOM, J. LITT, H. KENDALL, AND J. FRIEDMAN.	62
SCATTERING	SEPARABLE POTENTIAL FITS TO NUCLEON-NUCLEON SCATTERING DATA. T. R. MONGAN.	8
SCATTERING	STUDY OF INELASTIC EFFECTS IN P11-STATE PION-NUCLEON SCATTERING. K. M. ONG.	8
SCATTERING	SYMMETRY OF THE SCATTERING AMPLITUDE AT T EQUALS ZERO. K. H. WANG.	3
SCHMID	PARTIAL WIDTHS OF A HEAVY BOSON, T(2550) GOES TO PI-PI, NUCLEON-ANTINUCLEON. C. SCHMID.	5
SCHMID	SELF-CONSISTENT COUPLINGS OF THE 1-MINUS AND 2-PLUS NONETS TO THE ZERO-MINUS MESONS. C. SCHMID AND J. YELLIN.	4
SCHMID	SELF-CONSISTENT SYMMETRY PROPERTIES OF FINITE-ENERGY SUM RULES. C. SCHMID AND J. YELLIN WITH J. SHAPIRO AND K. BITAR.	5
SCHMID	SYMMETRIES OF SELF-CONSISTENT TRILINEAR MESON COUPLINGS. C. SCHMID AND J. YELLIN.	5
SCHMIDT	ANTIPROTON-PROTON INTERACTIONS. M. MANDELKERN, W. CHINOWSKY, R. BURNS, P. CONDON, J. SCHULTZ, AND P. SCHMIDT.	61
SCHMIDT	NUCLEON-NUCLEON INTERACTIONS. W. CHINOWSKY, P. SCHMIDT, W. GAGE, AND S. KLEIN.	60
SCHMIDT	PI-MINUS PROTON INTERACTION AT 550 MEV/C. W. CHINOWSKY, P. SCHMIDT, AND W. GAGE.	61
SCHROCK	MEASUREMENT OF NEUTRON PROTON GOES TO GAMMA DEUTERON ANGULAR DISTRIBUTION AS A DIRECT TEST OF TIME REVERSAL IN THE ELECTROMAGNETIC INTERACTION. D. CHENG, V. PEREZ-MENDEZ, J. M. SPERINDE, J. A. HELLAND, B. L. SCHROCK, R. P. HADDOCK, J. DETOUEF, M. J. LONGO, S. WILSON, AND K. K. YOUNG.	50

SCHULTZ	ANTIPROTON-PROTON INTERACTIONS. M. MANDELKERN, W. CHINOWSKY, R. BURNS, P. CONDON, J. SCHULTZ, AND P. SCHMIDT.	61
SCIENCES	RESEARCH IN MATHEMATICS AND COMPUTING SCIENCES. W. H. BENSON, P. CONCUS, H. HANERFELD, D. W. JENSON, L. P. MEISSNER, G. C. NOONEY, AND L. S. VARDAS.	85
SEEGER	K-PLUS DEUTERON INTERACTION FROM 800 TO 1600 MEV/C. R. BLAND, A. A. HIRATA, G. GOLDHABER, V. H. SEEGER, G. H. TRILLING, AND C. G. WOHL.	68
SEGRÈ	EXPERIMENTAL PHYSICS. E. SEGRÈ AND O. CHAMBERLAIN.	59
SEGRÈ	PUBLICATIONS -- SEGRÈ-CHAMBERLAIN.	63
SELF-CONSISTENT	SELF-CONSISTENT COUPLINGS OF THE 1-MINUS AND 2-PLUS NONETS TO THE ZERO-MINUS MESONS. C. SCHMID AND J. YELLIN.	4
SELF-CONSISTENT	SELF-CONSISTENT SYMMETRY PROPERTIES OF FINITE-ENERGY SUM RULES. C. SCHMID AND J. YELLIN WITH J. SHAPIRO AND K. BITAR.	5
SELF-CONSISTENT	SYMMETRIES OF SELF-CONSISTENT TRILINEAR MESON COUPLINGS. C. SCHMID AND J. YELLIN.	5
SEMIAUTOMATIC	HAZE -- SEMIAUTOMATIC EVENT MEASUREMENT. S. BUCKMAN, J. CRAWFORD, P. DAVIS, W. S. GEE, J. GREENE, C. OSBORNE, AND L. SHALZ.	91
SEMICONDUCTOR	PHOTOPEAK ANALYSIS OF SEMICONDUCTOR GAMMA-RAY SPECTRA BY COMPUTER. J. T. ROUTTI AND S. G. PRUSSIN.	72
SEPARABLE	SEPARABLE POTENTIAL FITS TO NUCLEON-NUCLEON SCATTERING DATA. T. R. MONGAN.	8
SESSLER	COLLECTIVE ION ACCELERATOR. L. J. LASLETT AND A. M. SESSLER.	12
SHALZ	FAIR -- DATA DISPLAY. D. CHRISLER AND L. SHALZ.	92
SHALZ	HAZE -- SEMIAUTOMATIC EVENT MEASUREMENT. S. BUCKMAN, J. CRAWFORD, P. DAVIS, W. S. GEE, J. GREENE, C. OSBORNE, AND L. SHALZ.	91
SHANNON	POLARIZATION IN PI-PLUS PROTON AND PI-MINUS PROTON ELASTIC SCATTERING FROM 250 TO 410 MEV. W. GORN, C. C. MOREHOUSE, T. M. POWELL, P. R. ROBRISH, S. ROCK, S. SHANNON, H. STEINER, AND H. WEISBERG.	61
SHANNON	POLARIZED-PROTON TARGET IMPROVEMENTS. O. CHAMBERLAIN, W. GORN, C. MOREHOUSE, T. POWELL, P. ROBRISH, S. ROCK, S. SHANNON, G. SHAPIRO, AND H. WEISBERG.	63
SHANNON	SEARCH FOR T VIOLATION IN INELASTIC ELECTRON-PROTON SCATTERING. O. CHAMBERLAIN, G. SHAPIRO, H. L. WEISBERG, P. R. ROBRISH, S. ROCK, S. SHANNON, R. TAYLOR, L. MO, E. BLOOM, J. LITT, H. KENDALL, AND J. FRIEDMAN.	62
SHAPIRO	POLARIZED-PROTON TARGET IMPROVEMENTS. O. CHAMBERLAIN, W. GORN, C. MOREHOUSE, T. POWELL, P. ROBRISH, S. ROCK, S. SHANNON, G. SHAPIRO, AND H. WEISBERG.	63
SHAPIRO	SEARCH FOR T VIOLATION IN INELASTIC ELECTRON-PROTON SCATTERING. O. CHAMBERLAIN, G. SHAPIRO, H. L. WEISBERG, P. R. ROBRISH, S. ROCK, S. SHANNON, R. TAYLOR, L. MO, E. BLOOM, J. LITT, H. KENDALL, AND J. FRIEDMAN.	62
SHAPIRO	SELF-CONSISTENT SYMMETRY PROPERTIES OF FINITE-ENERGY SUM RULES. C. SCHMID AND J. YELLIN WITH J. SHAPIRO AND K. BITAR.	5
SHEN	LRL-SLAC EXPERIMENT ON PI-MINUS PROTON INELASTIC REACTIONS. L. R. PRICE, A. H. ROSENFELD, P. SODING, D. HERNDON, R. LONGACRE, D. LEITH, A. BRODY, AND B. SHEN.	25

SHERS	CURRENT ALGEBRA AND LOW-ENERGY MESON-BARYON SCATTERING. P. SHERS.	7
SHUGART	ATOMIC-BEAM GROUP. H. SHUGART.	65
SHUGART	PUBLICATIONS -- SHUGART.	65
SIGMA	SIGMA INTERACTIONS AND DECAYS. L. K. GERSHWIN.	21
SIGMA	STUDY OF SIGMA DECAY PARAMETERS. R. D. TRIPP, F. T. SOLMITZ, AND R. O. BANGERTER.	20
SIGMA-PLUS	SIGMA-PLUS MAGNETIC MOMENT. T. S. MAST AND L. K. GERSHWIN.	21
SIGMA-PLUSMINUS	STUDY OF THE REACTION K-MINUS PROTON GOES TO SIGMA-PLUSMINUS PI-MINUSPLUS. P. M. DAUBER AND A. BARBARO-GALTIERI.	19
SIGMAS	PRODUCTION OF SIGMAS IN K-MINUS PROTON INTERACTIONS. M. PRIPSTEIN AND P. EBERHARD.	19
SIMMONS	BIOMEDICAL-APPLICATIONS PROGRAMS. E. H. COLEMAN, R. HINKINS, W. D. HOGAN, M. W. HOROVITZ, G. M. LITTON, T. F. MAHAN, M. C. SIMMONS, AND K. G. WILEY.	81
SINCLAIR	BACKSCATTERED LASER BEAM AT SLAC. W. PODOLSKY, A. H. ROSENFELD, P. SÖDING, R. D. TRIPP, AND M. S. RABIN, J. J. MURRAY, P. KLEIN, AND C. SINCLAIR.	26
SINGULARITIES	FACTORIZATION, KINEMATIC SINGULARITIES, AND CONSPIRACIES. F. ARBAB AND J. D. JACKSON.	2
SLAC	BACKSCATTERED LASER BEAM AT SLAC. W. PODOLSKY, A. H. ROSENFELD, P. SÖDING, R. D. TRIPP, AND M. S. RABIN, J. J. MURRAY, P. KLEIN, AND C. SINCLAIR.	26
SMITH	BP66 EXPERIMENT. J. A. ANDERSON, D. B. SMITH, AND G. A. SMITH.	23
SMITH	COSMIC-RAY MUON EXPERIMENT. L. W. ALVAREZ, P. M. DAUBER, S. M FLATTE, L. H. SMITH, M. L. STEVENSON, AND M. A. WAHLIG.	28
SMITH	DEUTERON MISSING-MASS EXPERIMENT. M. A. ABOLINS, G. S. SMITH, L. H. SMITH, AND A. B. WICKLUND.	27
SMITH	ENVIRONMENTAL RADIATION STUDIES. H. A. WOLLENBERG, A. R. SMITH, AND H. W. PATTERSON.	72
SMITH	HIGH-ALTITUDE PARTICLE PHYSICS AND COSMIC-RAY EXPERIMENTAL FACILITY. L. W. ALVAREZ, P. M. DAUBER, L. J. LLOYD, L. H. SMITH, AND M. A. WAHLIG.	27
SMITH	NONSTRANGE INTERACTIONS IN PROTON-PROTON COLLISIONS AT 6.6 GEV/C. E. GELLERT AND G. A. SMITH.	24
SMITH	PI-MINUS HE3 INTERACTIONS. J. SPERINDE, B. M. SMITH, L. KAUFMAN, AND V. PEREZ-MENDEZ.	51
SMITH	P67 EXPERIMENT. M. A. ABOLINS, A. RITTENBERG, AND G. A. SMITH.	24
SMITH	RADIOGEOLOGY. H. A. WOLLENBERG AND A. R. SMITH.	73
SMITH	SEARCH FOR A 2PI-ZERO RESONANCE NEAR 730 MEV IN PI-PLUS DEUTERON INTERACTIONS. R. J. MANNING AND G. A. SMITH.	23
SMITH	STRANGE-PARTICLE INTERACTIONS IN PROTON-PROTON COLLISIONS AT 5.5 AND 6.6 GEV/C. A. B. WICKLUND AND G. A. SMITH.	25
SÖDING	BACKSCATTERED LASER BEAM AT SLAC. W. PODOLSKY, A. H. ROSENFELD, P. SÖDING, R. D. TRIPP, AND M. S. RABIN, J. J. MURRAY, P. KLEIN, AND C. SINCLAIR.	26
SÖDING	DATA ON PARTICLES AND RESONANT STATES. A. H. ROSENFELD, N. BARASH-SCHMIDT, A. BARBARO-GALTIERI, L. R. PRICE, P. SÖDING, AND C. G. WOHL.	36

SÖDING	LRL-SLAC EXPERIMENT ON PI-MINUS PROTON INELASTIC REACTIONS. L. R. PRICE, A. H. ROSENFELD, P. SÖDING, D. HERNDON, R. LONGACRE, D. LEITH, A. BRODY, AND B. SHEN.	25
SOLMITZ	K82 EXPERIMENT. S. M. FLATTE, J. H. FRIEDMAN, A. BARBARO-GALTIERI, M. ALSTON-GARNJOST, G. R. LYNCH, M. S. RABIN, F. T. SOLMITZ, P. DAVIS, AND V. WALUCH.	26
SOLMITZ	STUDY OF SIGMA DECAY PARAMETERS. R. D. TRIPP, F. T. SOLMITZ, AND R. O. BANGERTER.	20
SOLNOD	SOLNOD.	79
SPACE	FOG -- GEOMETRY AND SPACE RECONSTRUCTION. S. BUCKMAN, J. FRANZ, AND F. WINDORSKI.	91
SPARK	ACCELERATOR EXPERIMENTS USING SPARK CHAMBERS.	26
SPARK CHAMBER	SPARK CHAMBER. A. RINDI AND H. WOLLENBERG.	73
SPARK CHAMBERS	SPARK CHAMBERS FOR THE MEDICAL PROGRAM. L. KAUFMAN, V. PEREZ-MENDEZ, J. SPERINDE, A. RINDI, AND H. WOLLENBERG.	51
SPARK CHAMBERS	WIRE SPARK CHAMBERS AND ELECTRONIC READOUTS. R. L. GROVE, G. L. STOKER, AND V. PEREZ-MENDEZ.	51
SPARK CHAMBER	SPARK-CHAMBER PROGRAMS.	35
SPECTRA	PHOTOPEAK ANALYSIS OF SEMICONDUCTOR GAMMA-RAY SPECTRA BY COMPUTER. J. T. ROUTTI AND S. G. PRUSSIN.	72
SPECTRAL ANALYSIS	SPECTRAL-ANALYSIS PROGRAMS.	80
SPECTRUM	HIGH-ENERGY NEUTRON SPECTRUM MEASUREMENTS. H. H. HECKMAN AND H. W. PATTERSON.	44
SPECTRUM	MEASUREMENT OF THE PI-ZERO ENERGY SPECTRUM IN K-PLUS DECAY TO PI-ZERO MU-PLUS NEUTRINO. P. KIJEWSKI, D. CUTTS, M. DEUTSCH, R. STIENING, AND C. WIEGAND.	59
SPERINDE	MEASUREMENT OF NEUTRON PROTON GOES TO GAMMA DEUTERON ANGULAR DISTRIBUTION AS A DIRECT TEST OF TIME REVERSAL IN THE ELECTROMAGNETIC INTERACTION. D. CHENG, V. PEREZ-MENDEZ, J. M. SPERINDE, J. A. HELLAND, B. L. SCHROCK, R. P. HADDOCK, J. DETOUEF, M. J. LONGO, S. WILSON, AND K. K. YOUNG.	50
SPERINDE	PI-MINUS HE3 INTERACTIONS. J. SPERINDE, B. M. SMITH, L. KAUFMAN, AND V. PEREZ-MENDEZ.	51
SPERINDE	PI-MINUS HE4 INTERACTIONS. L. KAUFMAN, V. PEREZ-MENDEZ, AND J. SPERINDE.	51
SPERINDE	SPARK CHAMBERS FOR THE MEDICAL PROGRAM. L. KAUFMAN, V. PEREZ-MENDEZ, J. SPERINDE, A. RINDI, AND H. WOLLENBERG.	51
SPIN	RELATIONS BETWEEN SPIN DENSITY MATRIX ELEMENTS. G. A. RINGLAND AND R. L. THEWS.	6
SPIRAL READER	SPIRAL-READER PROGRAMS.	34
STAFF	PHYSICS RESEARCH STAFF.	107
STEINER	PHASE-SHIFT ANALYSIS OF CHARGED-PION PROTON ELASTIC-SCATTERING EXPERIMENTS. C. H. JOHNSON, JR., O. CHAMBERLAIN, R. FIELD, AND H. STEINER.	62
STEINER	POLARIZATION IN PI-PLUS PROTON AND PI-MINUS PROTON ELASTIC SCATTERING FROM 250 TO 410 MEV. W. GORN, C. C. MOREHOUSE, T. M. POWELL, P. R. ROBRISH, S. ROCK, S. SHANNON, H. STEINER, AND H. WEISBERG.	61
STENGER	K-L-ZERO GOES TO 2 PI-ZERO. A. C. HELMHOLZ, R. W. KENNEY, I. R. LINSCOTT, B. J. MOYER, W. P. OLIVER, S. I. PARKER, C. A. REY, R. J. CENCE, B. D. JONES, V. Z. PETERSON, AND V. J. STENGER.	47

STETZ	PHOTOPRODUCTION OF VECTOR MESONS. L. KAUFMAN, V. PEREZ-MENDEZ, A. W. STETZ, S. H. WILLIAMS, A. BOYARSKI, F. BULOS, R. DIEBOLD, R. LARSEN, D. LEITH, B. RICHTER, AND W. BUSZA.	50
STETZ	PROTON-HE SCATTERING EXPERIMENT. A. W. STETZ.	50
STEVENS	MISCELLANEOUS PROGRAMS. R. A. BELSHE, M. L. CLINNICK, E. A. COLEMAN, J. P. TYSON, D. F. STEVENS, D. A. WILBER, AND E. E. WILLIAMS.	82
STEVENS	SYSTEMS PROGRAMMING. E. R. BEALS, W. H. BENSON, J. R. BORGES, D. N. BRAINARD, W. F. DEMPSTER, R. L. FINK, J. E. GLASNER, W. H. HUTCHINSON, J. P. JOHNSON, J. A. KNIGHT, S. J. PENNY, D. F. STEVENS, AND R. E. TRACY.	84
STEVENSON	COSMIC-RAY MUON EXPERIMENT. L. W. ALVAREZ, P. M. DAUBER, S. M FLATTE, L. H. SMITH, M. L. STEVENSON, AND M. A. WAHLIG.	28
STEWARD	DOSIMETRIC CALCULATIONS. G. M. LITTON, P. G. STEWARD, AND R. W. WALLACE.	71
STIENING	ETA LEPTONIC DECAYS. M. CHEN, R. HILDEBRAND, R. STIENING, AND C. WIEGAND.	60
STIENING	MEASUREMENT OF THE PI-ZERO ENERGY SPECTRUM IN K-PLUS DECAY TO PI-ZERO MU-PLUS NEUTRINO. P. KIJEWSKI, D. CUTTS, M. DEUTSCH, R. STIENING, AND C. WIEGAND.	59
STIENING	MUON POLARIZATION IN K-PLUS DECAY TO PI-ZERO MU-PLUS NEUTRINO (K-MU3-PLUS). M. DEUTSCH, R. STIENING, AND C. WIEGAND.	59
STIENING	STUDY OF K-PLUS DECAY TO PI-PLUS PI-ZERO GAMMA. P. KIJEWSKI, D. CUTTS, M. DEUTSCH, R. STIENING, AND C. WIEGAND.	59
STIENING	STUDY OF THE K-PLUS DECAY TO MU-PLUS NEUTRINO GAMMA. M. CHEN, D. CUTTS, M. DEUTSCH, R. STIENING, AND C. WIEGAND.	60
STOKER	WIRE SPARK CHAMBERS AND ELECTRONIC READOUTS. R. L. GROVE, G. L. STOKER, AND V. PEREZ-MENDEZ.	51
STOPPING POWER	STOPPING-POWER DIFFERENCES OF CHARGED PI MESONS. H. H. HECKMAN.	44
STORAGE	MASS STORAGE SYSTEM.	84
STRANGE PARTICLE	STRANGE-PARTICLE INTERACTIONS IN PROTON-PROTON COLLISIONS AT 5.5 AND 6.6 GEV/C. A. B. WICKLUND AND G. A. SMITH.	25
STRANGE PARTICLE	STUDY OF THE STRANGE-PARTICLE CHANNELS IN PI-PLUS PROTON AT 1.34, 1.43, AND 1.68 GEV/C. G. BORREANI AND G. E. KALMUS.	55
STRONG INTERACTION	THEORY OF STRONG INTERACTIONS.	1
SUM	FINITE-ENERGY SUM RULES FOR BACKWARD PION-NUCLEON SCATTERING. H. LEE.	4
SUM	HADRON SUM RULES FROM SU(3) ⊗ SU(3) CURRENT ALGEBRA. R. CHRISTENSEN.	7
SUM	SELF-CONSISTENT SYMMETRY PROPERTIES OF FINITE-ENERGY SUM RULES. C. SCHMID AND J. YELLIN WITH J. SHAPIRO AND K. BITAR.	5
SUM	UNITARITY AND FINITE-ENERGY SUM RULES. F. ARBAB.	4
SUPERCONDUCTIVITY	SUPERCONDUCTIVITY.	96
SURFACES	SURFACES WITH LINEARLY VARYING MEAN CURVATURE.	86
SURKO	NUCLEON-NUCLEON TRIPLE SCATTERING. C. M. ANKENBRANDT, D. CHENG, L. T. KERTH, K. C. LEUNG, B. MACDONALD, AND P. SURKO.	46

SWIATECKI	AVERAGE NUCLEAR PROPERTIES. W. D. MEYERS AND W. J. SWIATECKI.	11
SWIATECKI	EQUILIBRIUM CONFIGURATIONS OF A CHARGED CONDUCTING DROP. W. J. SWIATECKI AND C. F. TSANG.	10
SYMMETRIES	SYMMETRIES OF SELF-CONSISTENT TRILINEAR MESON COUPLINGS. C. SCHMID AND J. YELLIN.	5
SYMMETRY	DAUGHTERS, CONSPIRACIES, AND LORENTZ SYMMETRY. K. M. BITAR AND G. L. TINDLE.	5
SYMMETRY	SELF-CONSISTENT SYMMETRY PROPERTIES OF FINITE-ENERGY SUM RULES. C. SCHMID AND J. YELLIN WITH J. SHAPIRO AND K. BITAR.	5
SYMMETRY	SYMMETRY OF THE SCATTERING AMPLITUDE AT T EQUALS ZERO. K. H. WANG.	3
SYNCHROTRON	BOOSTER SYNCHROTRON.	95
SYNCHROTRON	SYNCHROTRON MAGNET DESIGN.	95
TAN	NONEXSISTENCE OF KRONECKER DELTAS IN ANGULAR MOMENTUM FOR STRONG PROCESSES. C. I. TAN.	2
TAN	POMERANCHON AS A NONSENSE-CHOOSING REGGE TRAJECTORY. C. I. TAN.	3
TARGET	HEAT TRANSFER THROUGH A THIN ROTATING NUCLEAR TARGET.	86
TARGET	POLARIZED-PROTON TARGET IMPROVEMENTS. O. CHAMBERLAIN, W. GORN, C. MOREHOUSE, T. POWELL, P. ROBRISH, S. ROCK, S. SHANNON, G. SHAPIRO, AND H. WEISBERG.	63
TAYLOR	SEARCH FOR T VIOLATION IN INELASTIC ELECTRON-PROTON SCATTERING. O. CHAMBERLAIN, G. SHAPIRO, H. L. WEISBERG, P. R. ROBRISH, S. ROCK, S. SHANNON, R. TAYLOR, L. MO, E. BLOOM, J. LITT, H. KENDALL, AND J. FRIEDMAN.	62
TEMPLE	TEMPLE.	49
TEMPORAL	TEMPORAL CHANGES IN THE INNER-BELT PROTONS. H. H. HECKMAN AND G. H. NAKANO.	43
THERMAL NEUTRON	GRAPHICAL TECHNIQUE FOR ESTIMATING ACTIVITY LEVELS PRODUCED IN THERMAL-NEUTRON AND FISSION-NEUTRON IRRADIATION. J. T. ROUTTI.	72
THEWS	FINITE WIDTHS AND ANGULAR DISTRIBUTIONS. G. A. RINGLAND AND R. L. THEWS.	6
THEWS	HIGH-ENERGY PHOTOPRODUCTION WITH POLARIZED PHOTONS. R. L. THEWS.	6
THEWS	PION EXCHANGE AND FACTORIZATION. G. A. RINGLAND AND R. L. THEWS.	3
THEWS	RELATIONS BETWEEN SPIN DENSITY MATRIX ELEMENTS. G. A. RINGLAND AND R. L. THEWS.	6
TIME REVERSAL	MEASUREMENT OF NEUTRON PROTON GOES TO GAMMA DEUTERON ANGULAR DISTRIBUTION AS A DIRECT TEST OF TIME REVERSAL IN THE ELECTROMAGNETIC INTERACTION. D. CHENG, V. PEREZ-MENDEZ, J. M. SPERINDE, J. A. HELLAND, B. L. SCHROCK, R. P. HADDOCK, J. DETOUEF, M. J. LONGO, S. WILSON, AND K. K. YOUNG.	50
TIME SHARING	INTERACTIVE TIME-SHARING SYSTEM.	85
TINDLE	DAUGHTERS, CONSPIRACIES, AND LORENTZ SYMMETRY. K. M. BITAR AND G. L. TINDLE.	5
TINDLE	NEW ASYMPTOTIC EXPANSION OF THE S-MATRIX. G. L. TINDLE.	6
TRACK	TRACK DETECTORS. H. A. WOLLENBERG AND H. W. PATTERSON.	71

TRACY	SYSTEMS PROGRAMMING. E. R. BEALS, W. H. BENSON, J. R. BORGES, D. N. BRAINARD, W. F. DEMPSTER, R. L. FINK, J. E. GLASNER, W. H. HUTCHINSON, J. P. JOHNSON, J. A. KNIGHT, S. J. PENNY, D. F. STEVENS, AND R. E. TRACY.	84
TRAJECTORY	POMERANCHON AS A NONSENSE-CHOOSING REGGE TRAJECTORY. C. I. TAN.	3
TRANSFER	HEAT TRANSFER THROUGH A THIN ROTATING NUCLEAR TARGET.	86
TRILINEAR	SYMMETRIES OF SELF-CONSISTENT TRILINEAR MESON COUPLINGS. C. SCHMID AND J. YELLIN.	5
TRILLING	EXPERIMENTAL PHYSICS. G. H. TRILLING AND G. GOLDHABER.	67
TRILLING	K-PLUS DEUTERON INTERACTION FROM 800 TO 1600 MEV/C. R. BLAND, A. A. HIRATA, G. GOLDHABER, V. H. SEEGER, G. H. TRILLING, AND C. G. WOHL.	68
TRILLING	LAMBDA-ZERO PROTON INTERACTIONS. J. A. KADYK, G. H. TRILLING, P. GAPOSCHKIN, G. ALEXANDER, R. A. HESS, S. R. G. FANG, AND F. M. HAMZEH.	67
TRILLING	PUBLICATIONS -- TRILLING-GOLDHABER.	70
TRILLING-GOLDHABER	PROGRAMMING FOR TRILLING-GOLDHABER GROUP. D. ARMSTRONG, E. R. BURNS, B. H. HALL, D. P. LAMB, AND J. G. MILLER.	77
TRIPLE	NUCLEON-NUCLEON TRIPLE SCATTERING. C. M. ANKENBRANDT, D. CHENG, L. T. KERTH, K. C. LEUNG, B. MACDONALD, AND P. SURKO.	46
TRIPP	BACKSCATTERED LASER BEAM AT SLAC. W. PODOLSKY, A. H. ROSENFELD, P. SODING, R. D. TRIPP, AND M. S. RABIN, J. J. MURRAY, P. KLEIN, AND C. SINCLAIR.	26
TRIPP	CHARGE-EXCHANGE (K-MINUS PROTON GOES TO ANTIK-ZERO NEUTRON) AND ELASTIC (K-MINUS PROTON GOES TO K-MINUS PROTON) REACTIONS. T. S. MAST, R. BANGERTER, A. BARBARO-GALTIERI, AND R. D. TRIPP.	22
TRIPP	K-MINUS PROTON GOES TO LAMBDA PI-PLUS PI-MINUS AND K-MINUS PROTON GOES TO LAMBDA PLUS MISSING MASS. T. S. MAST, A. BARBARO-GALTIERI, AND R. D. TRIPP.	21
TRIPP	REACTIONS K-MINUS PROTON GOES TO ANTIK-ZERO NEUTRON AND K-MINUS PROTON GOES TO LAMBDA PI-ZERO. S. M. FLATTE, A. BARBARO-GALTIERI, R. D. TRIPP, AND C. G. WOHL.	19
TRIPP	STUDY OF SIGMA DECAY PARAMETERS. R. D. TRIPP, F. T. SOLMITZ, AND R. O. BANGERTER.	20
TRIST	TRIST -- SYSTEM MONITOR. P. DAVIS AND C. OSBORNE.	92
TRUOEL	MEASUREMENT OF THE DIFFERENTIAL CROSS SECTION FOR PI-MINUS GOES TO NEUTRON GAMMA. R. P. HADDOCK, J. A. HELLAND, B. M. K. NEFKENS, A. S. L. PARSONS, P. TRUOEL, L. VERHEY, AND M. E. ZELLER.	39
TSANG	EQUILIBRIUM CONFIGURATIONS OF A CHARGED CONDUCTING DROP. W. J. SWIATECKI AND C. F. TSANG.	10
TSANG	GROUND-STATE MASSES OF EVEN-EVEN NUCLEI. C. F. TSANG.	10
TWO CHANNEL	TWO-CHANNEL CALCULATIONS WITH THE BETHE-SALPETER EQUATION. W. B. KAUFMANN.	7
TWO PION	TWO-PION EVENTS IN PI-PLUS PROTON FILM AT 1.35, 1.43, AND 1.68 GEV/C. R. W. BIRGE AND G. E. KALMUS.	55
TYPOGRAPHY	COMPUTER TYPOGRAPHY.	85
TYSON	MISCELLANEOUS PROGRAMS. R. A. BELSHE, M. L. CLINNICK, E. A. COLEMAN, J. P. TYSON, D. F. STEVENS, D. A. WILBER, AND E. E. WILLIAMS.	82

TYSON	PROGRAMMING FOR LOFGREN PHYSICS GROUP. B. M. POWELL, J. P. TYSON, L. WILSON, AND D. H. ZURLINDEN.	78
TYSON	PROGRAMMING FOR POWELL-BIRGE GROUP. H. C. ALBRECHT, H. HANERFELD, M. H. MYERS, J. TYSON, AND J. VISSER,	75
UNITARITY	MULTI-REGGE UNITARITY. C. DETAR.	1
UNITARITY	UNITARITY AND FINITE-ENERGY SUM RULES. F. ARBAB.	4
URGENT	URGENT.	79
VALE	184-INCH CYCLOTRON. J. T. VALE.	105
VARDAS	RESEARCH IN MATHEMATICS AND COMPUTING SCIENCES. W. H. BENSON, P. CONCUS, H. HANERFELD, D. W. JENSON, L. P. MEISSNER, G. C. NOONEY, AND L. S. VARDAS.	85
VECTOR	PHOTOPRODUCTION OF VECTOR MESONS. L. KAUFMAN, V. PEREZ-MENDEZ, A. W. STETZ, S. H. WILLIAMS, A. BOYARSKI, F. BULOS, R. DIEBOLD, R. LARSEN, D. LEITH, B. RICHTER, AND W. BUSZA.	50
VERHEY	MEASUREMENT OF THE DIFFERENTIAL CROSS SECTION FOR PI-MINUS GOES TO NEUTRON GAMMA. R. P. HADDOCK, J. A. HELLAND, B. M. K. NEFKENS, A. S. L. PARSONS, P. TRUOEL, L. VERHEY, AND M. E. ZELLER.	39
VIOLATION	SEARCH FOR T VIOLATION IN INELASTIC ELECTRON-PROTON SCATTERING. O. CHAMBERLAIN, G. SHAPIRO, H. L. WEISBERG, P. R. ROBRISH, S. ROCK, S. SHANNON, R. TAYLOR, L. MO, E. BLOOM, J. LITT, H. KENDALL, AND J. FRIEDMAN.	62
VISSER	PROGRAMMING FOR POWELL-BIRGE GROUP. H. C. ALBRECHT, H. HANERFELD, M. H. MYERS, J. TYSON, AND J. VISSER,	75
WAHLIG	COSMIC-RAY MUON EXPERIMENT. L. W. ALVAREZ, P. M. DAUBER, S. M FLATTE, L. H. SMITH, M. L. STEVENSON, AND M. A. WAHLIG.	28
WAHLIG	ETA-ZERO DECAY AND PI-ZERO PI-ZERO NEUTRON EXPERIMENTS. T. B. RISSER, R. W. KENNEY, M. PRIPSTEIN, O. DAHL, AND M. A. WAHLIG.	47
WAHLIG	HIGH-ALTITUDE PARTICLE PHYSICS AND COSMIC-RAY EXPERIMENTAL FACILITY. L. W. ALVAREZ, P. M. DAUBER, L. J. LLOYD, L. H. SMITH, AND M. A. WAHLIG.	27
WAHLIG	NEUTRAL DECAY MODES OF THE ETA MESON. O. I. DAHL, M. PRIPSTEIN, AND M. WAHLIG.	26
WAHLIG	NEUTRAL DIBOSON EXPERIMENT. O. I. DAHL, M. PRIPSTEIN, AND M. WAHLIG.	27
WALLACE	DOSIMETRIC CALCULATIONS. G. M. LITTON, P. G. STEWARD, AND R. W. WALLACE.	71
WALUCH	K82 EXPERIMENT. S. M. FLATTE, J. H. FRIEDMAN, A. BARBARO-GALTIERI, M. ALSTON-GARNJOST, G. R. LYNCH, M. S. RABIN, F. T. SOLMITZ, P. DAVIS, AND V. WALUCH.	26
WANG	SYMMETRY OF THE SCATTERING AMPLITUDE AT T EQUALS ZERO. K. H. WANG.	3
WEBBER	STUDY OF THE NEUTRAL K MESON. B. WEBBER, F. S. CRAWFORD, AND M. ALSTON-GARNJOST.	22
WEBER	DATA REDUCTION. R. W. BIRGE AND P. W. WEBER.	56
WEBER	ON-LINE SYSTEM. R. W. BIRGE AND P. W. WEBER.	55
WEIBEL-KAHN	QUASILINEAR EVOLUTION OF THE WEIBEL-KAHN INSTABILITY. N. ALBRIGHT.	11
WEISBERG	POLARIZATION IN PI-PLUS PROTON AND PI-MINUS PROTON ELASTIC SCATTERING FROM 250 TO 410 MEV. W. GORN, C. C. MOREHOUSE, T. M. POWELL, P. R. ROBRISH, S. ROCK, S. SHANNON, H. STEINER, AND H. WEISBERG.	61

WEISBERG	POLARIZED-PROTON TARGET IMPROVEMENTS. O. CHAMBERLAIN, W. GORN, C. MOREHOUSE, T. POWELL, P. ROBRISH, S. ROCK, S. SHANNON, G. SHAPIRO, AND H. WEISBERG.	63
WEISBERG	SEARCH FOR T VIOLATION IN INELASTIC ELECTRON-PROTON SCATTERING. O. CHAMBERLAIN, G. SHAPIRO, H. L. WEISBERG, P. R. ROBRISH, S. ROCK, S. SHANNON, R. TAYLOR, L. MO, E. BLOOM, J. LITT, H. KENDALL, AND J. FRIEDMAN.	62
WENZEL	DIBOSON PRODUCTION BY 2-TO-5-GEV/C PIONS. A. R. CLARK, B. CORK, T. ELIOFF, L. T. KERTH, T. N. RANGASWAMY, AND W. A. WENZEL.	45
WENZEL	MEASUREMENT OF THE (K-PLUS DECAY TO POSITRON + NEUTRINO) (K-PLUS DECAY TO MU-PLUS + NEUTRINO) BRANCHING RATIO. A. R. CLARK, B. CORK, T. ELIOFF, D. KEEFE, L. T. KERTH, J. F. MCREYNOLDS, AND W. A. WENZEL.	45
WENZEL	NEUTRAL LEPTONIC CURRENTS. A. R. CLARK, T. ELIOFF, H. J. FRISCH, R. P. JOHNSON, D. KEEFE, L. T. KERTH, D. NEWTON, AND W. A. WENZEL.	45
WHITE	DAPR -- FULLY AUTOMATIC EVENT SCANNING AND MEASUREMENT. B. BRITTON, J. CRAWFORD, J. FRANZ, W. S. GEE, D. HALL, N. JONTULOVIC, H. WHITE, AND F. WINDORSKI.	92
WHITE	DATA HANDLING. H. S. WHITE.	91
WICKLUND	DEUTERON MISSING-MASS EXPERIMENT. M. A. ABOLINS, G. S. SMITH, L. H. SMITH, AND A. B. WICKLUND.	27
WICKLUND	STRANGE-PARTICLE INTERACTIONS IN PROTON-PROTON COLLISIONS AT 5.5 AND 6.6 GEV/C. A. B. WICKLUND AND G. A. SMITH.	25
WIEGAND	ETA LEPTONIC DECAYS. M. CHEN, R. HILDEBRAND, R. STIENING, AND C. WIEGAND.	60
WIEGAND	MEASUREMENT OF THE PI-ZERO ENERGY SPECTRUM IN K-PLUS DECAY TO PI-ZERO MU-PLUS NEUTRINO. P. KIJEWSKI, D. CUTTS, M. DEUTSCH, R. STIENING, AND C. WIEGAND.	59
WIEGAND	MUON POLARIZATION IN K-PLUS DECAY TO PI-ZERO MU-PLUS NEUTRINO (K-MU3-PLUS). M. DEUTSCH, R. STIENING, AND C. WIEGAND.	59
WIEGAND	STUDY OF K-PLUS DECAY TO PI-PLUS PI-ZERO GAMMA. P. KIJEWSKI, D. CUTTS, M. DEUTSCH, R. STIENING, AND C. WIEGAND.	59
WIEGAND	STUDY OF THE K-PLUS DECAY TO MU-PLUS NEUTRINO GAMMA. M. CHEN, D. CUTTS, M. DEUTSCH, R. STIENING, AND C. WIEGAND.	60
WILBER	MISCELLANEOUS PROGRAMS. R. A. BELSHE, M. L. CLINNICK, E. A. COLEMAN, J. P. TYSON, D. F. STEVENS, D. A. WILBER, AND E. E. WILLIAMS.	82
WILEY	BIOMEDICAL-APPLICATIONS PROGRAMS. E. H. COLEMAN, R. HINKINS, W. D. HOGAN, M. W. HOROVITZ, G. M. LITTON, T. F. MAHAN, M. C. SIMMONS, AND K. G. WILEY.	81
WILLIAMS	MISCELLANEOUS PROGRAMS. R. A. BELSHE, M. L. CLINNICK, E. A. COLEMAN, J. P. TYSON, D. F. STEVENS, D. A. WILBER, AND E. E. WILLIAMS.	82
WILLIAMS	PHOTOPRODUCTION OF VECTOR MESONS. L. KAUFMAN, V. PEREZ-MENDEZ, A. W. STETZ, S. H. WILLIAMS, A. BOYARSKI, F. BULOS, R. DIEBOLD, R. LARSEN, D. LEITH, B. RICHTER, AND W. BUSZA.	50
WILSON	MEASUREMENT OF NEUTRON PROTON GOES TO GAMMA DEUTERON ANGULAR DISTRIBUTION AS A DIRECT TEST OF TIME REVERSAL IN THE ELECTROMAGNETIC INTERACTION. D. CHENG, V. PEREZ-MENDEZ, J. M. SPERINDE, J. A. HELLAND, B. L. SCHROCK, R. P. HADDOCK, J. DETOUEF, M. J. LONGO, S. WILSON, AND K. K. YOUNG.	50

WILSON	PROGRAMMING FOR LOFGREN PHYSICS GROUP. B. M. POWELL, J. P. TYSON, L. WILSON, AND D. H. ZURLINDEN.	78
WINDORSKI	DAPR -- FULLY AUTOMATIC EVENT SCANNING AND MEASUREMENT. B. BRITTON, J. CRAWFORD, J. FRANZ, W. S. GEE, D. HALL, N. JONTULOVIC, H. WHITE, AND F. WINDORSKI.	92
WINDORSKI	FOG -- GEOMETRY AND SPACE RECONSTRUCTION. S. BUCKMAN, J. FRANZ, AND F. WINDORSKI.	91
WIRE	WIRE SPARK CHAMBERS AND ELECTRONIC READOUTS. R. L. GROVE, G. L. STOKER, AND V. PEREZ-MENDEZ.	51
WOHL	DATA ON PARTICLES AND RESONANT STATES. A. H. ROSENFELD, N. BARASH-SCHMIDT, A. BARBARO-GALTIERI, L. R. PRICE, P. SÖDING, AND C. G. WOHL.	36
WOHL	K-PLUS DEUTERON INTERACTION FROM 800 TO 1600 MEV/C. R. BLAND, A. A. HIRATA, G. GOLDHABER, V. H. SEEGER, G. H. TRILLING, AND C. G. WOHL.	68
WOHL	REACTIONS K-MINUS PROTON GOES TO ANTIK-ZERO NEUTRON AND K-MINUS PROTON GOES TO LAMBDA PI-ZERO. S. M. FLATTE, A. BARBARO-GALTIERI, R. D. TRIPP, AND C. G. WOHL.	19
WOLLENBERG	ENVIRONMENTAL RADIATION STUDIES. H. A. WOLLENBERG, A. R. SMITH, AND H. W. PATTERSON.	72
WOLLENBERG	RADIOGEOLOGY. H. A. WOLLENBERG AND A. R. SMITH.	73
WOLLENBERG	SPARK CHAMBER. A. RINDI AND H. WOLLENBERG.	73
WOLLENBERG	SPARK CHAMBERS FOR THE MEDICAL PROGRAM. L. KAUFMAN, V. PEREZ-MENDEZ, J. SPERINDE, A. RINDI, AND H. WOLLENBERG.	51
WOLLENBERG	TRACK DETECTORS. H. A. WOLLENBERG AND H. W. PATTERSON.	71
WOLLMAN	BOLTZMANN EQUATION FOR POLYATOMIC GAS. W. WOLLMAN.	12
WRITTEN	OTHER PROGRAMMING NOTES WRITTEN DURING THIS PERIOD.	35
YELLIN	SELF-CONSISTENT COUPLINGS OF THE 1-MINUS AND 2-PLUS NONETS TO THE ZERO-MINUS MESONS. C. SCHMID AND J. YELLIN.	4
YELLIN	SELF-CONSISTENT SYMMETRY PROPERTIES OF FINITE-ENERGY SUM RULES. C. SCHMID AND J. YELLIN WITH J. SHAPIRO AND K. BITAR.	5
YELLIN	SYMMETRIES OF SELF-CONSISTENT TRILINEAR MESON COUPLINGS. C. SCHMID AND J. YELLIN.	5
YOUNG	MEASUREMENT OF NEUTRON PROTON GOES TO GAMMA DEUTERON ANGULAR DISTRIBUTION AS A DIRECT TEST OF TIME REVERSAL IN THE ELECTROMAGNETIC INTERACTION. D. CHENG, V. PEREZ-MENDEZ, J. M. SPERINDE, J. A. HELLAND, B. L. SCHROCK, R. P. HADDOCK, J. DETOUEF, M. J. LONGO, S. WILSON, AND K. K. YOUNG.	50
ZELLER	K-PLUS DECAY ANALYSIS. K. M. CROWE, R. P. HADDOCK, M. E. ZELLER, AND N. T. DAIRIKI.	39
ZELLER	MEASUREMENT OF THE DIFFERENTIAL CROSS SECTION FOR PI-MINUS GOES TO NEUTRON GAMMA. R. P. HADDOCK, J. A. HELLAND, B. M. K. NEFKENS, A. S. L. PARSONS, P. TRUOEL, L. VERHEY, AND M. E. ZELLER.	39
ZERO-MINUS	SELF-CONSISTENT COUPLINGS OF THE 1-MINUS AND 2-PLUS NONETS TO THE ZERO-MINUS MESONS. C. SCHMID AND J. YELLIN.	4
ZURLINDEN	PROGRAMMING FOR LOFGREN PHYSICS GROUP. B. M. POWELL, J. P. TYSON, L. WILSON, AND D. H. ZURLINDEN.	78
1.1	PI-PLUS DEUTERON INTERACTIONS FROM 1.1 TO 2.3 GEV/C. M. A. ABOLINS, O. I. DAHL, G. DANBURG, D. DAVIES, AND R. RADER.	23

1.34	STUDY OF THE STRANGE-PARTICLE CHANNELS IN PI-PLUS PROTON AT 1.34, 1.43, AND 1.68 GEV/C. G. BORREANI AND G. E. KALMUS.	55
1.35	TWO-PION EVENTS IN PI-PLUS PROTON FILM AT 1.35, 1.43, AND 1.68 GEV/C. R. W. BIRGE AND G. E. KALMUS.	55
1.43	STUDY OF THE STRANGE-PARTICLE CHANNELS IN PI-PLUS PROTON AT 1.34, 1.43, AND 1.68 GEV/C. G. BORREANI AND G. E. KALMUS.	55
1.43	TWO-PION EVENTS IN PI-PLUS PROTON FILM AT 1.35, 1.43, AND 1.68 GEV/C. R. W. BIRGE AND G. E. KALMUS.	55
1.68	STUDY OF THE STRANGE-PARTICLE CHANNELS IN PI-PLUS PROTON AT 1.34, 1.43, AND 1.68 GEV/C. G. BORREANI AND G. E. KALMUS.	55
1.68	TWO-PION EVENTS IN PI-PLUS PROTON FILM AT 1.35, 1.43, AND 1.68 GEV/C. R. W. BIRGE AND G. E. KALMUS.	55
1-MINUS	SELF-CONSISTENT COUPLINGS OF THE 1-MINUS AND 2-PLUS NONETS TO THE ZERO-MINUS MESONS. C. SCHMID AND J. YELLIN.	4
1PROGRAMMING	MAY-NOVEMBER 1968 DATA-REDUCTION FORECAST. 1PROGRAMMING EFFORT. B. PARDOE.	32
1600	K-PLUS DEUTERON INTERACTION FROM 800 TO 1600 MEV/C. R. BLAND, A. A. HIRATA, G. GOLDHABER, V. H. SEEGER, G. H. TRILLING, AND C. G. WOHL.	68
184-INCH	MODEL OF RADIO-FREQUENCY SYSTEM FOR IMPROVEMENT OF 184-INCH CYCLOTRON. L. KANSTEIN.	105
184-INCH	184-INCH CYCLOTRON REGENERATOR STUDIES. A. C. PAUL.	41
184-INCH	184-INCH CYCLOTRON. J. T. VALE.	105
1968	MAY-NOVEMBER 1968 DATA-REDUCTION FORECAST. 1PROGRAMMING EFFORT. B. PARDOE.	32
2.3	PI-PLUS DEUTERON INTERACTIONS FROM 1.1 TO 2.3 GEV/C. M. A. ABOLINS, O. I. DAHL, G. DANBURG, D. DAVIES, AND R. RADER.	23
2.8	PI-PLUS DEUTERON INTERACTIONS FROM 2.8 TO 4.2 GEV/C. M. A. ABOLINS, O. I. DAHL, AND P. HOCH.	22
2.9	PI-PLUS PROTON INTERACTIONS FROM 2.9 TO 4.1 GEV/C. D. G. BROWN, R. W. BIRGE, G. GIDAL, AND G. BORREANI.	54
2-PLUS	SELF-CONSISTENT COUPLINGS OF THE 1-MINUS AND 2-PLUS NONETS TO THE ZERO-MINUS MESONS. C. SCHMID AND J. YELLIN.	4
2-TO-5-GEV/C	DIBOSON PRODUCTION BY 2-TO-5-GEV/C PIONS. A. R. CLARK, B. CORK, T. ELIOFF, L. T. KERTH, T. N. RANGASWAMY, AND W. A. WENZEL.	45
2PI-ZERO	SEARCH FOR A 2PI-ZERO RESONANCE NEAR 730 MEV IN PI-PLUS DEUTERON INTERACTIONS. R. J. MANNING AND G. A. SMITH.	23
25-INCH	NEW 25-INCH BUBBLE-CHAMBER BEAM. J. A. KADYK, D. G. COYNE, AND W. R. BUTLER.	67
25-INCH	25-INCH HYDROGEN BUBBLE CHAMBER. W. M. POWELL AND G. J. ECKMAN.	53
25-INCH	25-INCH HYDROGEN BUBBLE-CHAMBER RUN. POWELL-BIRGE GROUP.	53
250	POLARIZATION IN PI-PLUS PROTON AND PI-MINUS PROTON ELASTIC SCATTERING FROM 250 TO 410 MEV. W. GORN, C. C. MOREHOUSE, T. M. POWELL, P. R. ROBRISH, S. ROCK, S. SHANNON, H. STEINER, AND H. WEISBERG.	61
3.7	PI-PLUS PROTON INTERACTION AT 3.7 GEV/C. W. R. BUTLER, D. G. COYNE, P. GAPOSCHKIN, AND J. MACNAUGHTON.	68

4.1	PI-PLUS PROTON INTERACTIONS FROM 2.9 TO 4.1 GEV/C. D. G. BROWN, R. W. BIRGE, G. GIDAL, AND G. BORREANI.	54
4.2	PI-PLUS DEUTERON INTERACTIONS FROM 2.8 TO 4.2 GEV/C. M. A. ABOLINS, O. I. DAHL, AND P. HOCH.	22
410	POLARIZATION IN PI-PLUS PROTON AND PI-MINUS PROTON ELASTIC SCATTERING FROM 250 TO 410 MEV. W. GORN, C. C. MOREHOUSE, T. M. POWELL, P. R. ROBRISH, S. ROCK, S. SHANNON, H. STEINER, AND H. WEISBERG.	61
5.5	STRANGE-PARTICLE INTERACTIONS IN PROTON-PROTON COLLISIONS AT 5.5 AND 6.6 GEV/C. A. B. WICKLUND AND G. A. SMITH.	25
550	PI-MINUS PROTON INTERACTION AT 550 MEV/C. W. CHINOWSKY, P. SCHMIDT, AND W. GAGE.	61
6.6	NONSTRANGE INTERACTIONS IN PROTON-PROTON COLLISIONS AT 6.6 GEV/C. E. GELLERT AND G. A. SMITH.	24
6.6	STRANGE-PARTICLE INTERACTIONS IN PROTON-PROTON COLLISIONS AT 5.5 AND 6.6 GEV/C. A. B. WICKLUND AND G. A. SMITH.	25
6411	6411.	84
6600	PDP5/8 -- 6600 DATA LINK.	78
6600	6600.	84
730	SEARCH FOR A 2PI-ZERO RESONANCE NEAR 730 MEV IN PI-PLUS DEUTERON INTERACTIONS. R. J. MANNING AND G. A. SMITH.	23
800	K-PLUS DEUTERON INTERACTION FROM 800 TO 1600 MEV/C. R. BLAND, A. A. HIRATA, G. GOLDHABER, V. H. SEEGER, G. H. TRILLING, AND C. G. WOHL.	68

This report was prepared as an account of Government sponsored work. Neither the United States, nor the Commission, nor any person acting on behalf of the Commission:

A. Makes any warranty or representation, expressed or implied, with respect to the accuracy, completeness, or usefulness of the information contained in this report, or that the use of any information, apparatus, method, or process disclosed in this report may not infringe privately owned rights; or

B. Assumes any liabilities with respect to the use of, or for damages resulting from the use of any information, apparatus, method, or process disclosed in this report.

As used in the above, "person acting on behalf of the Commission" includes any employee or contractor of the Commission, or employee of such contractor, to the extent that such employee or contractor of the Commission, or employee of such contractor prepares, disseminates, or provides access to, any information pursuant to his employment or contract with the Commission, or his employment with such contractor.