UCRL-18241

University of California
Ernest O. Lawrence Radiation Laboratory

TWO-WEEK LOAN COPY

This is a Library Circulating Copy which may be borrowed for two weeks. For a personal retention copy, call Tech. Info. Division, Ext. 5545

ON-LINE WIRE SPARK CHAMBER SYSTEM USED AS A MASS SPECTROMETER

Robert M. Graven, Franklin D. Neu, Hans H. Stellrecht, Michael A. Torrano, Maris A. Abolins, Robert L. McCarthy, Gerald A. Smith, Lawrence H. Smith, and A. Barry Wicklund

May 14, 1968

RECEIVED
LAWRENCE
RADIATION LABORATORY
JUN 27 1968
LIBRARY AND
DOCUMENTS SECTION

Berkeley, California

UCRL 18241 c.2

DISCLAIMER

This document was prepared as an account of work sponsored by the United States Government. While this document is believed to contain correct information, neither the United States Government nor any agency thereof, nor the Regents of the University of California, nor any of their employees, makes any warranty, express or implied, or assumes any legal responsibility for the accuracy, completeness, or usefulness of any information, apparatus, product, or process disclosed, or represents that its use would not infringe privately owned rights. Reference herein to any specific commercial product, process, or service by its trade name, trademark, manufacturer, or otherwise, does not necessarily constitute or imply its endorsement, recommendation, or favoring by the United States Government or any agency thereof, or the Regents of the University of California. The views and opinions of authors expressed herein do not necessarily state or reflect those of the United States Government or any agency thereof or the Regents of the University of California.

Submitted to
Review of Scientific Instruments

UCRL-18241
Preprint

UNIVERSITY OF CALIFORNIA

Lawrence Radiation Laboratory
Berkeley, California

AEC Contract No. W-7405-eng-48

ON-LINE WIRE SPARK CHAMBER SYSTEM USED AS A MASS SPECTROMETER

Robert M. Graven, Franklin D. Neu, Hans H. Stellrecht,
Michael A. Torrano, Maris A. Abolins, Robert L. McCarthy,
Gerald A. Smith, Lawrence H. Smith, and A. Barry Wicklund

May 14, 1968

ON-LINE WIRE SPARK CHAMBER SYSTEM USED AS A MASS SPECTROMETER*

Robert M. Graven, Franklin D. Neu, Hans H. Stellrecht, Michael A. Torrano, Maris A. Abolins, Robert L. McCarthy, Gerald A. Smith,† Lawrence H. Smith, and A. Barry Wicklund

Lawrence Radiation Laboratory
University of California
Berkeley, California

May 14, 1968

ABSTRACT

An on-line wire spark chamber system has been built and tested to measure the momentum spectrum of a high-energy secondary beam at the Lawrence Radiation Laboratory's Bevatron. The system consists of six dual-plane chambers with one spark per plane, interfaced to a PDP-5 computer. The interface also includes readout for a digital voltmeter, time-to-amplitude converter, and scalers used in recording the beam. The computer permits accumulation of statistics for beam tuning and detection and measurement of the desired mass components. The observed spatial resolution of any one chamber is approximately ±0.6 to 0.8 mm.

I. INTRODUCTION

A data acquisition and display system for wire spark chambers has been built as part of a missing-mass spectrometer setup at the LRL Bevatron to measure the deuteron momentum spectrum in the reaction $p + p \rightarrow d + MM$, for incident momenta of 4 to 7 GeV/c. Figures 1 and 2 show the electronics and spark chamber systems respectively. Block diagrams of the experiment and the corresponding timing sequence are shown in Figs. 3 and 4 respectively.

The presence of a deuteron is signalled by an appropriately timed coincidence among the scintillators S_1, S_2, S_3, and S_4 along with an anti-coincidence from the water Čerenkov counter (Č). Under these conditions, the spark chambers are triggered and spark data are transferred to the scaler logic. This device, constructed of TTL integrated circuits, digitizes and displays X and Y coordinates and fiducial information from six wire spark chambers (W).

II. COMPUTER

The PDP-5 computer is used during the early phases of beam operation to optimize spark-chamber operation and to assist in tuning the beam. These tasks may be done continuously with no need to shuttle data to and from the main computing facility with its attendant turn-around time. During actual running of the experiment the computer is used to monitor and record magnet currents, incoming beam intensity and other significant data. Spark chamber coordinate information, scintillator pulse heights, and particle time of flight for each event during a Bevatron spill

(500 to 800 ms) are read into the computer. Accumulated data for many events are analyzed to obtain statistical information for memory scope displays of the beam momentum and the missing-mass spectrum. The data are recorded on magnetic tape, which provides a hard copy of the experimental results for subsequent detailed analysis on a larger computer.

The versatility and economy of computer control versus equivalent hand-wired electronics are evident. The computer allows modification of data-checking procedures, new testing methods, systems tuning, and display of any desired parameter or data point by only changing the operating program. No down time is required for any of these options, and the computer input-output facility provides the experimenter with precise control of the apparatus.

III. CHAMBERS

An informational block diagram for one chamber is shown in Fig. 5. A trigger pulse initiates a breakdown of the spark gap, which places a 5-kV pulse on the chamber. The chamber then discharges along the ion path left by the charged particle responsible for the trigger. The coordinates of the spark are digitized and stored in the X and Y scalers until they are requested by the computer or sent to a digital tape recorder. The magnetostrictive sensors[1] have lucite instead of metal bars to reduce the capacitive loading of the bars when mounted on the chambers. These bars permit the use of smaller driving capacitors for a given spark size and speed of operation.

Fifty percent of the spark chamber gas (90% Ne, 10% He) is passed over alcohol at 0°C in a nonrecirculating fashion. The use of alcohol significantly reduces the number of double sparks (two sparks in one chamber) without increasing the number of misses for a 10-ms event rate. Reignition is reduced, since the alcohol acts as a quenching agent. Each chamber has a total flow rate of about 30 cm^3/min. The overall efficiency for three chambers, defined as the percentage of all events that are collinear ($|X_1 + X_3 - 2X_2|$, $|Y_1 + Y_3 - 2Y_2| \leq 5$ mm) is 80%. For a 4-ms event rate, this efficiency is reduced by about 10%.

The sensitive area of the chambers is 25 by 25 cm with a 1-cm gap. Copper wires of 7-mil diam (25 wires/inch) are used in construction of the chambers. A 140-V dc clearing field is used, and the overall delay from the time the particle is detected until the high voltage is applied to the chamber is about 400 ns. More detailed information about wire spark chambers is available in the literature.[2]

IV. ELECTRONICS

Figure 6 is a schematic drawing of a printed-circuit board containing four 12-bit scalers, the gating logic, and a display of the content of each scaler. The pulse sequence from the magnetostrictive delay line consists of two fiducial pulses t_1 and t_2 and the spark pulse t_x. The first fiducial pulse t_1 opens both the X-fiducial and X-coordinate gates. This pulse permits the two binary scalers to clock at the 10-MHz rate.

Scalers X_c and X_f are stopped by the spark pulses t_x and t_2

respectively. The numbers in X_c and X_f are proportional to the distance of the spark from the first fiducial, and the interfiducial distance respectively. If no spark occurs in a chamber, scaler X_c is stopped by the second fiducial pulse t_2, while the fiducial scaler continues counting. In order to stop all scalers, a "preset" pulse is applied at t_3 ($t_3 > t_2$), which turns off all gates controlling the scalers. An 18 μs pulse is applied to all reset points on the scaler board starting at t_0 when the spark occurs to insure that everything is held reset until spark noise has been dissipated.

The control logic provides the choice of either writing the scaler information directly onto magnetic tape or transmitting it to the computer for further analysis. The control logic contains all necessary electronics to control the tape transport and to multiplex the chamber data, either under computer control or under its own automatic control. In the former case, the logic accepts data-request commands from the computer and provides the data from the selected device. Information may be transmitted to the computer either one word or many words per request.

V. EXPERIMENTAL RESULTS

A histogram of the collinearity functions $X_1 + X_3 - 2X_2$ and $Y_1 + Y_3 - 2Y_2$ for the three-chamber system previously discussed, including 1961 minimum ionizing events, is shown in Fig. 7. Analysis of these data indicates that the resolution per chamber on the ground plane is ±0.6 mm and ±0.8 mm on the high-voltage plane. Thus, it is advantageous to mount the ground plane wires vertically to provide the best

possible measurement of the momentum, which is done in the horizontal plane.

During analysis of these data it has been noted that, for the same interfiducial distance, the magnetostrictive wire on the pulsed plane appears to be 1% longer than the sensing wire on the ground plane. This effect and the related poorer resolution on the pulsed plane is caused by surface corrosion of the pulsed plane sense wire. This phenomenon apparently reduces the acoustic velocity and adversely affects the pulse shape.

VI. ACKNOWLEDGMENTS

The authors would like to thank G. Armstrong, S. Buckingham, R. Gilmer, F. Kreiss, and A. Meuti for their assistance in this project. The continuing support of Professor Luis W. Alvarez is gratefully acknowledged.

FOOTNOTES AND REFERENCES

*This work was done under auspices of the U. S. Atomic Energy Commission.

†Present address: Physics Department, Michigan State University, East Lansing, Michigan 48823.

1. F. A. Kirsten, K. L. Lee, and J. Conragen, IEEE Trans. Nucl. Sci. NS13, No. 3, 583 (1966): F. A. Kirsten and R. J. Rudden, A Low-Cost, Large-Scale Magnetostrictive Spark-Chamber Digitizing System, UCRL-17938, February 21, 1968 (to be published in IEEE Trans. Nucl. Sci.).
2. R. E. Gilmer, F. D. Neu, R. J. Sprafka, and J. Stople, Rev. Sci. Instr. 38, 375 (1967).

FIGURE LEGENDS

Fig. 1. Overall view of digitizing electronics, computer, and tape unit.

Fig. 2. Beam-line view of upstream half of mass spectrometer, including three dual-plane wire chambers, magnetostrictive sensors, and helium bags used to minimize gas scattering.

Fig. 3. Block diagram of the experimental layout.

Fig. 4. Event timing sequence, showing particle detection (nanosecond scale), event digitizing and recording (microsecond scale), and chamber recharging (millisecond scale) separately.

Fig. 5. Block diagram indicating chamber-triggering and event-digitizing system.

Fig. 6. Scaler board schematic including timing diagram (bottom of drawing).

Fig. 7. Plots of the quantities $X_1 + X_3 - 2X_2$ and $Y_1 + Y_3 - 2Y_2$ for (a) the high-voltage plane and (b) the ground plane of three dual-plane wire chambers as shown in Fig. 2.

XBB 685-2593

Fig. 1

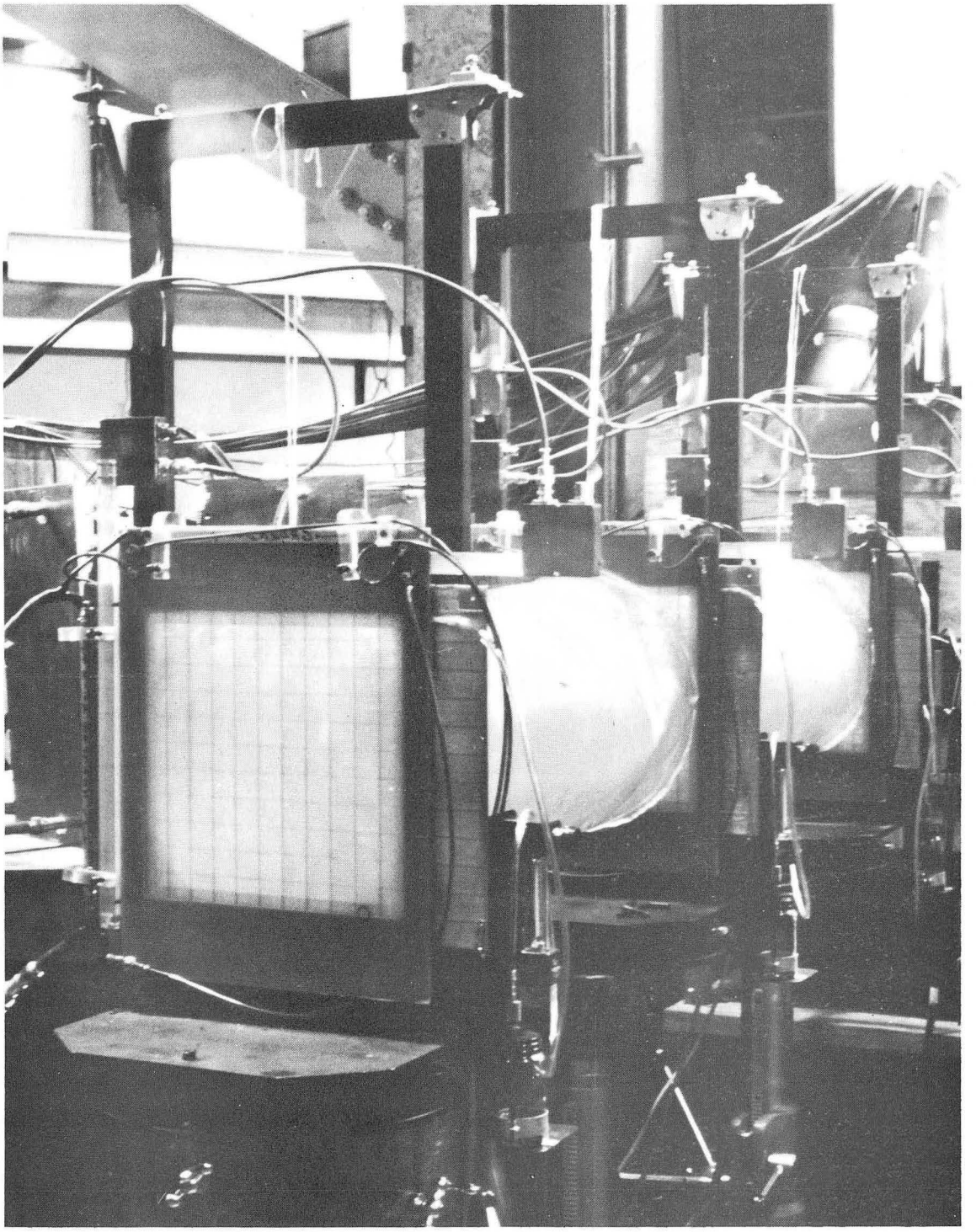

XBB 685-2594

Fig. 2

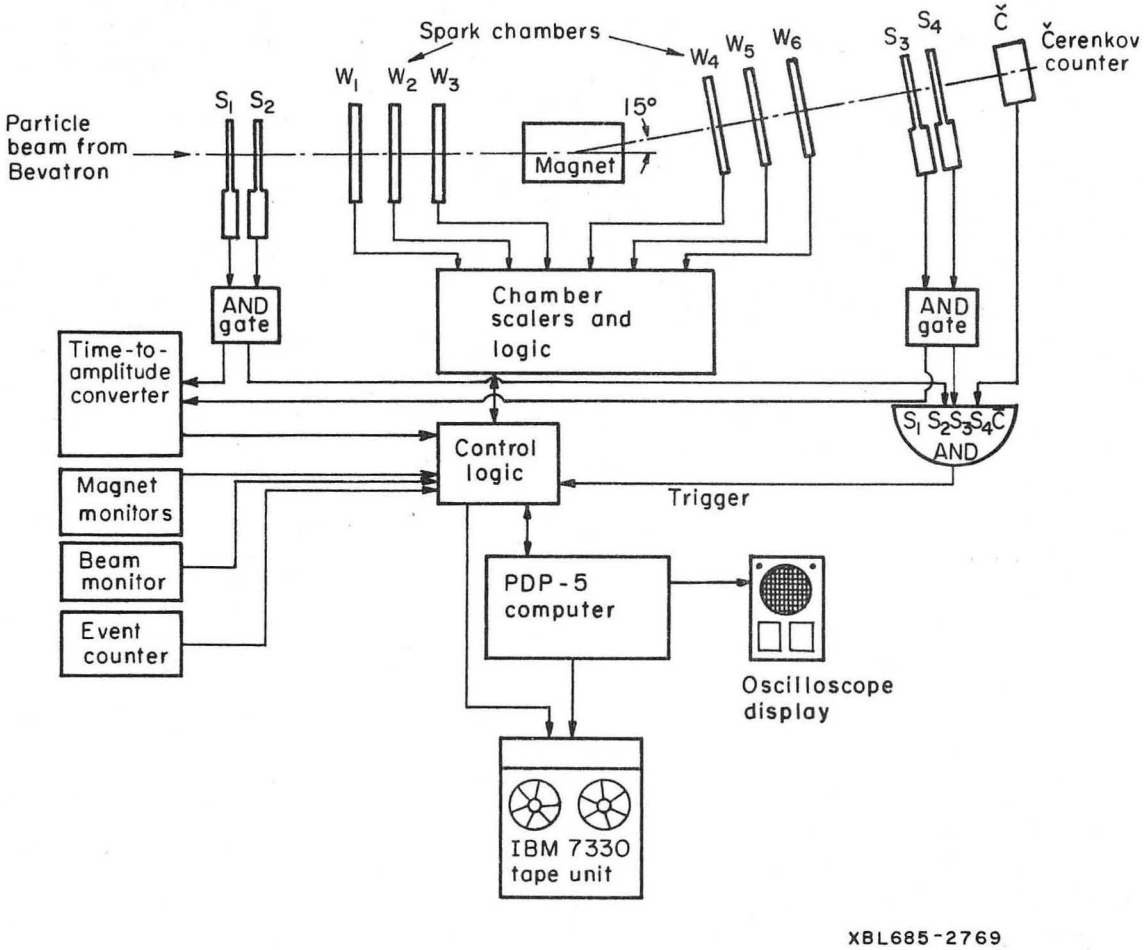
Spark chambers
W1 W2 W3
W4 W5 W6
S1 S2
S3 S4
Č
Čerenkov counter
Particle beam from Bevatron
15°
Magnet
AND gate
Chamber scalers and logic
AND gate
Time-to-amplitude converter
S1 S2 S3 S4 Č AND
Control logic
Trigger
Magnet monitors
Beam monitor
Event counter
PDP-5 computer
Oscilloscope display
IBM 7330 tape unit
XBL685-2769

Fig. 3

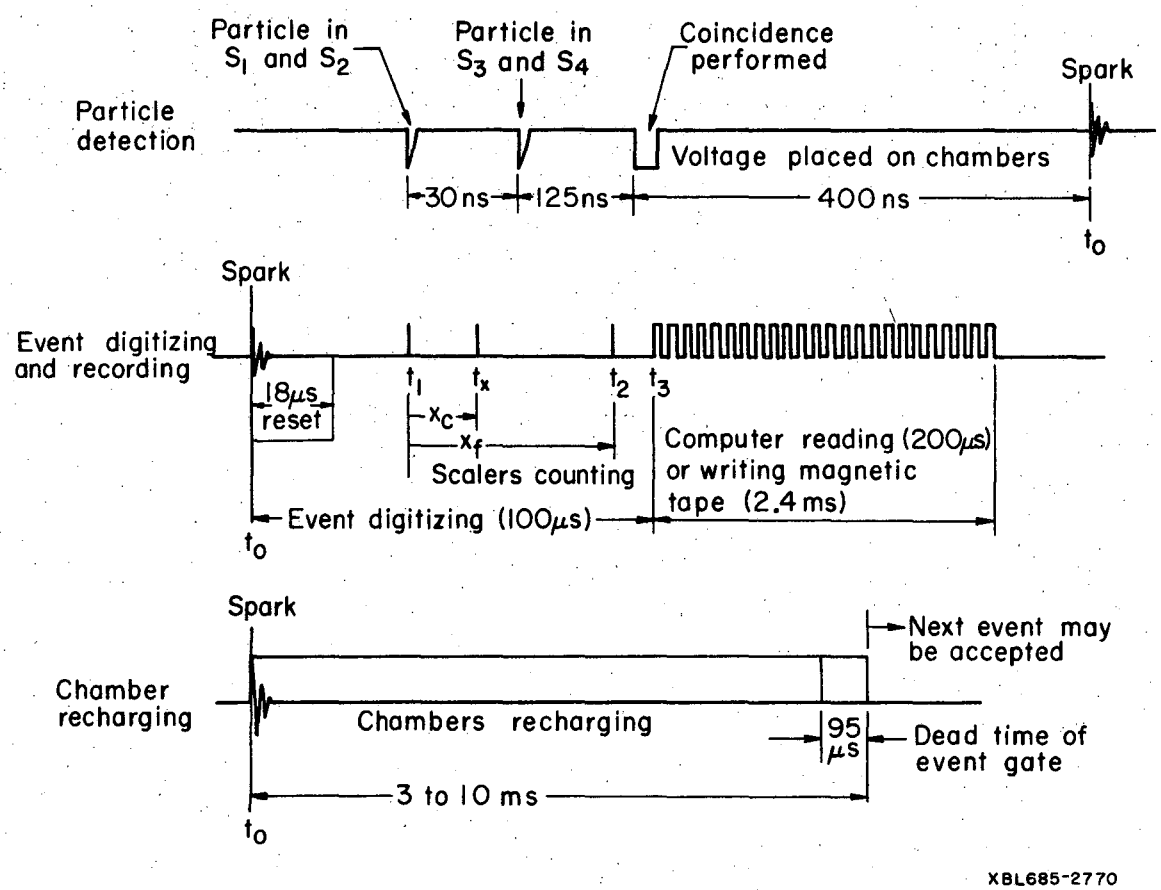
Particle in S_1 and S_2
Particle in S_3 and S_4
Coincidence performed
Spark
Particle detection
Voltage placed on chambers
30 ns
125 ns
400 ns
t_0
Spark
Event digitizing and recording
18μs reset
t_1
t_x
t_2
t_3
x_c
x_f
Scalers counting
Computer reading (200μs) or writing magnetic tape (2.4 ms)
Event digitizing (100μs)
t_0
Spark
Next event may be accepted
Chamber recharging
Chambers recharging
95 μs
Dead time of event gate
3 to 10 ms
t_0
XBL685-2770

Fig. 4

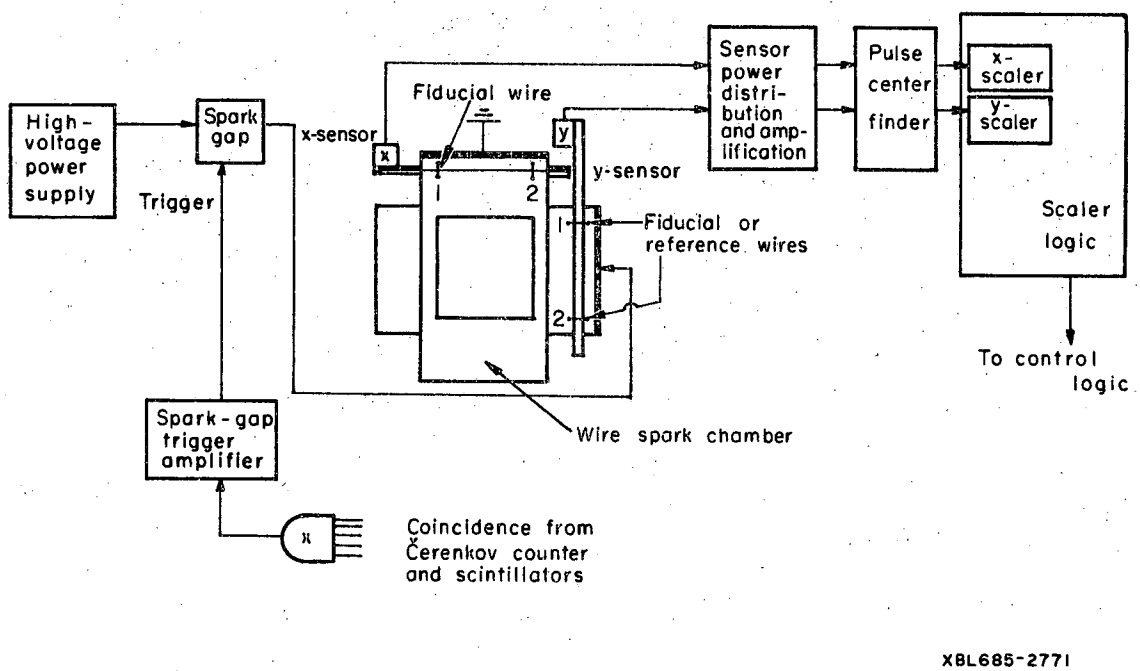
High-voltage power supply
Spark gap
Trigger
x-sensor
Fiducial wire
y-sensor
Fiducial or reference wires
Wire spark chamber
Sensor power distribution and amplification
Pulse center finder
x-scaler
y-scaler
Scaler logic
To control logic
Spark-gap trigger amplifier
Coincidence from Čerenkov counter and scintillators
XBL685-2771

Fig. 5

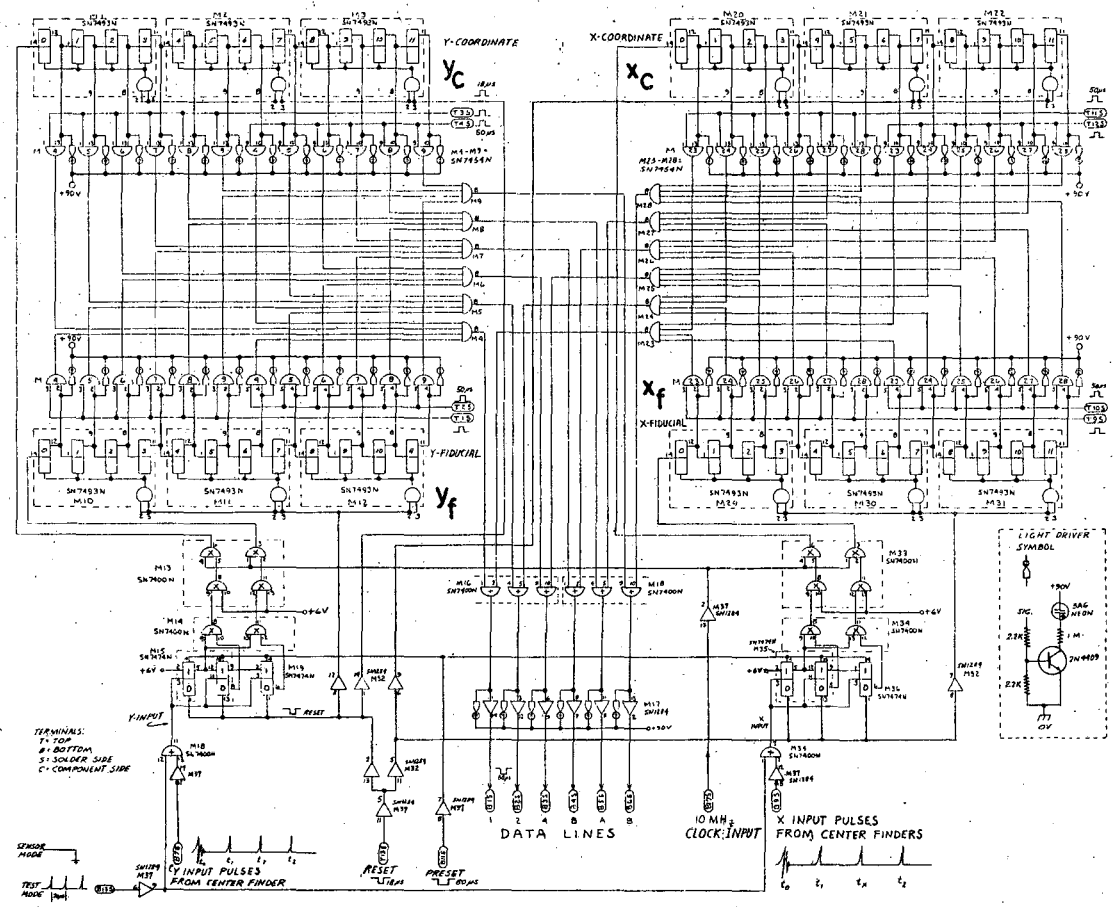

XBL685-2772

Fig. 6

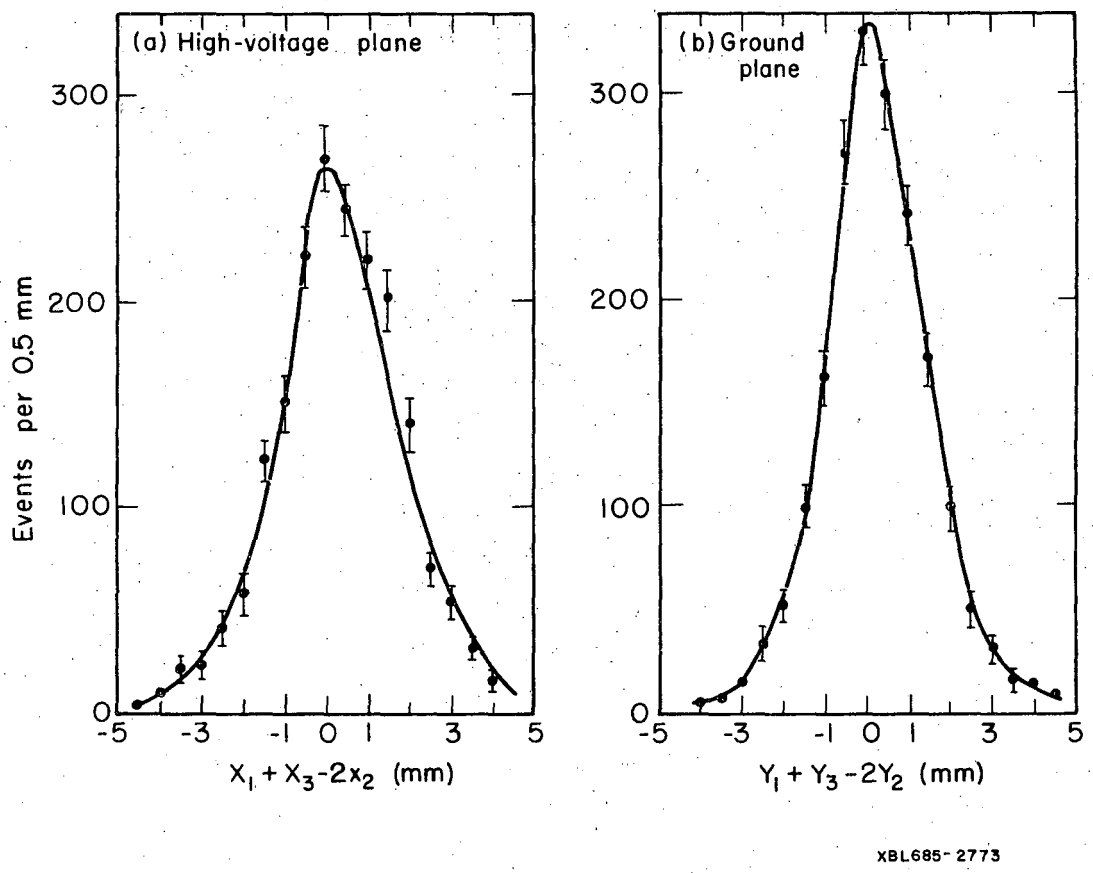
(a) High-voltage plane
(b) Ground plane
Events per 0.5 mm
300
200
100
0
-5
-3
-1
0
1
3
5
$X_1 + X_3 - 2x_2$ (mm)
$Y_1 + Y_3 - 2Y_2$ (mm)
XBL685-2773

Fig. 7

This report was prepared as an account of Government sponsored work. Neither the United States, nor the Commission, nor any person acting on behalf of the Commission:

A. Makes any warranty or representation, expressed or implied, with respect to the accuracy, completeness, or usefulness of the information contained in this report, or that the use of any information, apparatus, method, or process disclosed in this report may not infringe privately owned rights; or

B. Assumes any liabilities with respect to the use of, or for damages resulting from the use of any information, apparatus, method, or process disclosed in this report.

As used in the above, "person acting on behalf of the Commission" includes any employee or contractor of the Commission, or employee of such contractor, to the extent that such employee or contractor of the Commission, or employee of such contractor prepares, disseminates, or provides access to, any information pursuant to his employment or contract with the Commission, or his employment with such contractor.