UCRL-18246

University of California
Ernest O. Lawrence Radiation Laboratory

IMPROVEMENTS TO THE BERKELEY HILAC

James M. Haughian

May 1968

TWO-WEEK LOAN COPY

This is a Library Circulating Copy which may be borrowed for two weeks. For a personal retention copy, call Tech. Info. Division, Ext. 5545

RECEIVED
LAWRENCE
RADIATION LABORATORY
JUN 1 1968
LIBRARY AND
DOCUMENTS SECTION

Berkeley, California

DISCLAIMER

This document was prepared as an account of work sponsored by the United States Government. While this document is believed to contain correct information, neither the United States Government nor any agency thereof, nor the Regents of the University of California, nor any of their employees, makes any warranty, express or implied, or assumes any legal responsibility for the accuracy, completeness, or usefulness of any information, apparatus, product, or process disclosed, or represents that its use would not infringe privately owned rights. Reference herein to any specific commercial product, process, or service by its trade name, trademark, manufacturer, or otherwise, does not necessarily constitute or imply its endorsement, recommendation, or favoring by the United States Government or any agency thereof, or the Regents of the University of California. The views and opinions of authors expressed herein do not necessarily state or reflect those of the United States Government or any agency thereof or the Regents of the University of California.

To be presented at the BNL Conference
on Proton Linear Accelerators, Upton
Long Island, New York, May 20-24, 1968
and Proceedings

UCRL-18246
Preprint

UNIVERSITY OF CALIFORNIA

Lawrence Radiation Laboratory
Berkeley, California

AEC Contract No. W-7405-eng-48

IMPROVEMENTS TO THE BERKELEY HILAC

James M. Haughian

May 1968

IMPROVEMENTS TO THE BERKELEY HILAC*

James M. Haughian

Lawrence Radiation Laboratory
University of California
Berkeley, California

Summary

It is proposed to lengthen the HILAC prestripper cavity to 20 feet, operate at a maximum electric gradient of 640 kV/ft, and utilize magnetic quadrupole drift tube focusing. This system will be capable of accepting ions with charge-to-mass ratios as low as 0.095, thereby taking advantage of increased source output at lower e/m ratios and providing greater transmittance thru the cavity. The proposed system is expected to produce a krypton beam approximately 500 times more intense than considered possible with the existing system.

The Heavy Ion Accelerator at the Lawrence Radiation Laboratory in Berkeley began operation in April 1957 and has been used primarily for research in nuclear chemistry. This machine produces beams of an ion from helium to argon mass at 10 MeV/nucleon.

Quasi-stable elements in the region A = 300, Z = 114 have recently been predicted; but these elements can only be produced from ion beams of mass 80 (krypton) or greater. At present beams of these heavier ions can be produced in the HILAC source, but the intensities are so low that they are unusable.

Experiments have shown that the number of heavy ions available from the present source increases greatly for low charge-to-mass ratios (Fig. 1). Modifications to the accelerator that would enable the prestripper to accept and accelerate ions of 0.095 e/m rather than the present $e/m \geq 0.14$, would result in an increased krypton beam, for example, of approximately 2 orders of magnitude. Hence the impetus for the present HILAC improvements.

A simplified sketch of the existing HILAC is shown in Fig. 2. The linear accelerators consist of a 500 kV Cockcroft-Walton injector and two 70-mH Alvarez-type cavity resonators. Up to a 20-msec pulse of ions with $e/m \geq 0.14$ is injected 1 to 40 times a second into the first cavity, called the prestripper. This cavity, 10 feet in diameter and 15 feet long, contains 37 grid-focused drift tubes. The ions are accelerated from an energy of 0.07 MeV/nucleon to 1.0 MeV/nucleon. Before entering the second cavity, they pass through a thin beryllium foil to increase their e/m ratio to 0.3 or more. The poststripper cavity, 9 feet in diameter and 90 feet long, contains 67 drift tubes each enclosing a focusing magnet; in this cavity, the ions are accelerated to their final energy of 10 MeV/nucleon.

The existing prestripper operates at a maximum electrical gradient of 540 kV/ft. To accelerate ions with e/m as low as 0.095 will require an elongated tank operating at a maximum gradient of 640 kV/ft, and an injection velocity corresponding to an injector potential of 800 kV.

To retain the poststripper, the prestripper output energy will have to remain at 1.0 MeV/nucleon. To accelerate the lower e/m ions, the prestripper tank will have to be lengthened. To retain the present spacing between cavities, the prestripper must be elongated in the upstream direction. This encroaches upon the ground end beam transport area, and this equipment must therefore be moved into the present injector terminal. Maintaining a minimum 4-ft accelerating column, and a 5 1/2-ft spacing between the ion source terminal and ground, results in a foreshortened and relocated terminal house, as shown in Fig. 3.

In addition to lengthening the prestripper to accelerate ions of lower e/m, it was decided to eliminate the focusing grids in the drift tubes. The random orientation of the focusing grids in the present drift tubes results in the loss of 5/6 of the entering beam. A greater acceptance provided by magnetic quadrupole lenses will recover this loss and provide for a further increase in beam.

Thus the increase of the heavier ions is expected to occur for two reasons: utilization of source output and greater prestripper acceptance. This increase is expected to produce some 500 times more beam than present. Expected beam currents of greater than 10^{10} krypton ions/sec hold great promise for synthesis of superheavy elements presently predicted.

Ion Source

The HILAC ion source is of the cold, dual-cathode, hooded-arc PIG type, operated in a magnetic field of about 4000 G that also acts as a charge-state separator. The details of this source have been published elsewhere.[1] The magnet that supplies the field for the discharge is also used to select the desired ions for acceleration by the Cockcroft-Walton injector, and thus minimize space-charge blow-up in the accelerating

*This work was done under the auspices of the U.S. Atomic Energy Commission.

column. Some focusing is provided by the electrodes of the source. Additional focusing, necessary to obtain maximum beam output from the prestripper, will be provided by magnetic-quadrupole lenses placed between the ground end of the accelerating column and the input to the prestripper. Since charge exchange causes appreciable loss of the multiply-charged ions at pressures above 10^{-5} torr, diffusion pumps must be used at both the ion source and the ground end of the column.

Cockcroft-Walton Injector

The ion source and its associated equipment are located in a 7-ft x 9-ft x 11-ft-high voltage shell with 1 1/2-ft corner radii. The shell structure is mounted on four 10-inch-diameter Textolite columns 6 feet high (see Fig. 5). These columns are coated on their inside and outside diameters with a thin layer of polyurethane. A drain of approximately 3 microamperes per column at a 800-kV terminal potential will afford a uniform gradient down the columns and eliminate the need for auxiliary gradient rings. A helically-wound divider resistor running from ground to the shell will be placed between two support columns. Local power to the shell is presently supplied by a 35-kW ac generator and a 5-kW dc generator driven by special graphite-free belts. The belts will be eliminated and instead a horizontal filament-wound fiberglas driveshaft from a 50-hp motor located beyond the ground plane will be used to drive the 35-kW ac generator directly. A 5-kW dc alternator will replace the generator and will be coupled to the ac generator with V-belts. The heat load of the magnet and ion source, diffusion pump and baffle will be removed by pumping oil-free freon refrigerant from the ground plane to the shell. All mechanical equipment will be located under the main floor of the shell, with access from below. The space above the main floor will be reserved for the ion source and its control equipment.

Space will be provided in the magnet vacuum chamber for two ion sources. These sources may be used alternately by reversing the field of the magnet. The power supply for the tape-wound magnet coils will be located in the support stand of the magnet.

The injector will be located in a metal-sheathed room with 5 1/2-ft clearances at the shell sides and top. Dry cooling air will circulate through the room. There will be provision for quick access through this room to allow changes of ion sources and gas cylinders.

All injector operations will be remotely controlled by light-sensitive resistors located at the high-voltage end of a bundle of fiber optics. A single fiberglas control rod will operate the interlocked grounding bar.

The accelerating column will be 4 feet long. It will consist of hydroformed stainless steel electrodes and alumina insulators joined by epoxy resin. The electrodes are connected to the output taps of an 800-kV Cockcroft-Walton running above and parallel to the column. The space containing these connections will be pressurized with SF_6 maintained at 3 psig. The design of a Cockcroft-Walton of this type has been discussed elsewhere.[2] The oscillator for the C-W and its transmission line will be located at the ground plane directly over the beam transport equipment.

The Ground End

Since the upstream extension of the prestripper cavity forces the ground end beam transport equipment into the injector terminal area, a new ground plane will be built at the exit end of the accelerating column. A portion of this ground plane will be stationary and will be located in the central gap of the service platform. To present rounded corners of the ground plane to the shell, a curved screen formed of wire mesh will be supported by the service platform and will be raised into position during operation at high voltage.

The beam transport equipment, e.g., Faraday cups, attenuator foils, induction electrode, etc., will be housed in a vacuum box directly over a diffusion pump. The Buncher electrode will be mounted in this chamber. It is a single drift tube resonating at 70 mH as a capacity-loaded quarter-wave line. It operates at 5000 V with a drift space of 48 inches. Its rf power is obtained from a small coupling loop in the wall of the prestripper. Grids are used in its bore to reduce rf defocusing.

Prestripper

The cylindrical shell of the new 122.0 i.d. vacuum tank will be made of copper-clad steel. The steel is 0.45-inch thick, and the copper lining is 0.05-inch thick. The vacuum welds will be in the steel and will be covered by copper welds on the inside. In this way the vacuum tank will also serve as the rf cavity resonator. The operating vacuum of 1 to 5 microtorr will be produced by the single 32-inch mercury diffusion pump presently used on the prestripper. Access to the cavity will be provided by a 32-inch-diameter port in the tank wall. See Fig. 4.

In the present prestripper the 4 1/2-inch-thick endwalls were machined to the proper diameter and welded directly to the cylindrical shell. Since the endwalls deflect inward some .080 inches under vacuum load, excessive stresses would be induced at the weld joint if the endwall was not reduced in cross section as shown in Fig. 6.

Rather than duplicate the present design, it was decided not to weld the cylindrical shell directly to the endplates. Instead, the ends will be left as rectangular plates with flame-cut edges, and will be tie-rodded together with the cylindrical shell clamped in-between. In this inexpensive method of construction, the edges of the endplates will be left free to rotate under vacuum.

Sections of a hoop formed from a 1/2-in. x 1-in. bar will be welded to the endplates to prevent the shell wall from moving radially inward when evacuated. The vacuum joint will be made with an auxiliary piece of sheetmetal on the outside of the cavity. This sheetmetal vacuum barrier will have an expansion joint formed in it to allow freedom of movement during pumpdown. See Fig. 7.

It is planned to use the rf liners from the endwalls of the present tank. They will be installed in the new cavity. The liners, which were recently installed in the existing cavity, were made in 30° sectors to allow them to be brought through the 32-inch manhole opening. At present, there is a 1/8-inch radial gap between sectors. These sectors will be salvaged and reused in the new cavity. The radial gaps will be welded closed. The enclosed space behind the rf liner will be connected directly to the diffusion pump manifold through a copper tube running along the wall of the vessel. This will eliminate the contamination of the main vacuum by minor leakage in the outside welds or from outgassing of either the endwall or the backside of the liner. In addition, isolating this space will eliminate the need for safeguards to prevent the disastrous occurence of a pressure difference between the enclosed space and the main vacuum. Even through the new prestripper will be longer than the existing tank by 5 feet, the inside surface area exposed to the main vacuum is approximately 1/2 that of the existing tank, due to the elimination of the space between the liners and the endwalls.

The prestripper will be cooled by water circulated through extruded cooling tubes fastened to the outside of the cylindrical wall. During installation, these tubes will be heated and clamped tightly while elongated. A heat-conducting epoxy, with a conductivity approaching that of the steel itself, will be used to fill the void between shell and tube. In areas where the tubes cannot be stretched conveniently, a sheetmetal shroud, identical to that now used, will be used to enclose a 1/8-inch-thick free flow of water over the cylindrical surface of the vessel. The rf liners will be cooled, as before, by water flowing through flattened cooling tubes soldered to their surfaces.

Prestripper Drift Tubes

The 48 drift tubes will be cylinders with flat faces, a 3/4-inch corner at the outer radius and a 3/16-inch radius at the bore. Varying in length from 1.594 to 5.827 inches, they will be made in three groups: the first of 0.60 bore diameter, the second of 0.77 bore diameter, and the third of 0.90 bore diameter. The shells will be formed of two deep-drawn cups of 1/16-inch type-430 stainless steel chosen to act as magnetic shields for stray fringing fields, and so reduce forces between adjacent quadrupoles. (Had copper shells been used, this advantage would have been lost. In addition, the deflection due to a pressure differential across the face of the shell is identical for a stainless shell approximately half the thickness of a copper one; the net reduction in thickness resulting from the choice of a stainless shell will go into increasing the length of the tape-wound coil of the magnet to reduce power loss.)

With the quadrupole magnet inside, the halves of the shell will be joined together with a single circumferential joint and joints at each end of the bore tube. The completed shell will be then plated with copper to a thickness of 0.015 inch. Thus each drift tube shell will enclose its magnet in a vacuum-tight envelope. The quadrupole magnets will be accurately aligned to the drift-tube shell bore, and this shell will be supported in the tank on two copper plated mild steel stems. To simplify construction, all drift tubes will be made with the same outside diameter and will be spaced for a constant g/l ratio of 0.25. This drift tube diameter and g/l ratio were determined by resonance measurements with a 1/5-scale precision model of the rf cavity. (Adjustments in the diameter and length of the first- and last-half-drift-tube will be made during final tuning operations.)

The drift-tube stems will be rigidly clamped to two 2 x 4 1/2 x 240 steel bars running parallel to the beam axis, and spaced at 90° to one another on the tank's outside surface. In the alignment procedure, the focal axis of a telescope will first be made coincident with the desired beam axis. A tube, with a cross-hair at one end, will simulate a drift-tube stem; it will be used to accurately align the two bars parallel to the beam axis.

The drift-tube stems, rigidly clamped to these steel bars, will depend upon them for accurate placement. Since the radial lengths of the drift tube stems will be closely toleranced during assembly operations, these parallel clamp bars will insure the proper location of the center of the drift tube to the beam axis. The drift tube position along the beam axis will be controlled primarily by the location of the holes down the lengths of the bars. Positioning of these holes during machining of the bars will insure proper approximate positioning of the drift tubes along the beam axis. The final position along the beam axis will be determined by means of accurately drilled steel tapes, and the drift tube positions will be adjusted by the judicious use of two drift tube stem benders (Fig. 8).

On previous occasions such as this, the main complication in the alignment procedure was the changing shape of the tank due to temperature gradients. This problem will be reduced, since prior to drift tube installation, the cooling tubes will have been placed on the shell and the entire cavity kept at a uniform temperature.

After the alignment of the drift tubes, bellows assemblies will be heliarc-welded to the cladding of the tank and to the stem plating. These bellows will afford both an rf joint and a vacuum seal around the stems. No further drift tube alignment is planned or allowed for. Minor

deflections in the cylindrical shell during vacuum loading will produce gradual, and not objectionable, changes along the beam line through the magnets. This gradual curvature of the accelerator axis will introduce no deterioration in beam quality such as that associated with random misalignments of successive drift tubes.

The manufacture of the drift tube magnets and their power supply will be discussed in another paper to be published at this conference, so the subjects will not be covered here. In general, however, the magnets are of tape-wound-coil construction. The first group of 0.7-inch aperture diameter will operate at a gradient of 35.56 kG/inch; the second group, 0.87 aperture diameter will operate at 23.24 kG/inch; and the third group, 1.00 aperture diameter, at 15.82 kG/inch. The magnets, stems, and shells will be cooled with low-conductivity water. Electroless-nickel plating will reduce the pitting of exposed mild steel surfaces.

Prestripper Alignment

The rf fields in the accelerator gaps of the poststripper are sensitive to small perturbations in the dimensions of the cavity. The prestripper exhibits the same characteristics, but to a much less degree, as evidenced by measurements on a 1/5 scale model of the tank. To obtain some particular set of fields in the prestripper, the drift-tube lengths and gaps must be precisely measured and positioned, or auxiliary tuning devices must be introduced at various points along the cavity. In a strong-focusing linear accelerator, the magnets must also be located with precision; and where the magnets and drift tubes are single units, this places a second set of conditions on drift-tube locations.

To a considerable extent these two types of alignment are separable. The magnets must be aligned with their centers on the axis and oriented at the correct angle in a transverse plane but their longitudinal position is not very important, whereas the flatness of the rf field is most sensitive to the drift-tube lengths and gaps—i.e., longitudinal dimensions. By a series of auxiliary measurements and controls during manufacture, both of these conditions will be met with the required precision.

Before being enclosed in the shell, each drift-tube magnet will undergo a series of measurements. The most important of these will be the location of its central axis, and the location of its transverse magnetic axes—the planes of pure radial and purely azimuthal field. By careful manufacturing procedures (described in the other paper), the central axis will be placed at the center of the beam tube touching the four pole tips. This will be checked by a small rotating-coil gaussmeter giving zero signal when placed on the axis.

The proper orientation of the transverse magnetic axes will be inherent in the manufacturing procedure. Measurement will be made with search coils whose planes are known relative to an external divided circle and which will be positioned for null readings when the magnet is pulsed on or off. These will locate each of the eight planes of each magnet to a few minutes of arc. When these have been accurately confirmed, holes will be drilled in the yoke for insertion of the drift tube stems. During these magnetic measurements, the axial fringing fields will be measured and integrated to give the effective magnetic lengths, and the dH/dl gradients vs. magnet current will be determined.

The drift tube shells will be positioned axially by being spot-welded directly to the magnet yoke. Some minor distortion of the shell is expected during the oven soldering operation. The average lengths of the drift tubes will be measured after copper plating; they will be pressed to length when oversize, and when undersize by more than 0.005 inch, they will be elongated by high pressure air.

Since the combined weight of the two rectangular steel endplates and the cylindrical shell is greater than the 10-ton rating of the building crane, the prestripper will be installed in three parts. First, the two endplates with their rf liners will be positioned on their supports. Then the cylindrical shell with its installed drift tubes will be lowered into place between them. After the endplates have been tie-rodded together and the inside corner bars welded in place, the assembly will be aligned to the focal axis of a telescope mounted at the output end of the poststripper and pointed upstream. Final checking of the drift tube positions will be followed by the alignment and installation of the injector terminal house along the same telescope axis.

Radio Frequency System

The existing prestripper cavity is excited with a single RCA-type 6949 beam power triode, operated as a Class B amplifier. This amplifier will also be used on the new cavity. Due to the increased length and higher operating gradients, additional rf power will be required to achieve high-beam duty factor. A second tube, operated as a tuned-plate, tuned-grid oscillator will be provided to supply the rf power. Engineering effort will go into the redesign of the amplifier structure to eliminate the grid coupling line and tune the cavity. Since this amplifier will be used only when the tank gradients are high, a tube presently held as a spare will be used.

Recent advances in the quality of vacuum-brazed joints to ceramic materials has led to the redesign of the loops on the anode and grid transmission lines. In general, the insulators on the new loops are conical in shape, rather than disc-shaped as before. Design of the loops is such that tolerances on the ceramic parts has eased considerably, and hence the costs are lower. The use of vacuum-brazed joints has reduced the flange diameter of the loops, with the advantage that the

size of the required openings through the shielding wall is reduced. Adding shielding to the inside of the inner transmission lines will further decrease the amount of radiation reaching the adjacent aisleway.

The manufacturing tolerances on the prestripper shell were left loose to reduce costs. Since the frequency of this cavity can be raised easily, its diameter has been purposely chosen to give resonance at a frequency below that of the poststripper. After final alignment of the drift tubes in the cavity, coarse adjustment of the prestripper frequency will be made by attaching a water-cooled radial copper fin along the full length of the side wall of the cavity.

The fine tuning of the prestripper will be done by using the two tuners presently installed in the existing cavity. Each tuner, projecting through the side wall of the cavity, is a loop and capacitance adjusted to resonate at 85 mH. When the tuner is rotated so that the loop is coupled to the magnetic field in the cavity, the resonant frequency of the coupled system is lower than the frequency of the cavity by itself. When the loop is rotated so that it does not couple with the magnetic flux in the cavity, it acts like a conventional slug tuner and raises the frequency of the cavity. Centered about the resonant frequency of the cavity, each tuner will shift the frequency by about 90 kc.

Accelerator Controls

A wide variety of particles will be accelerated in the HILAC ($0.095 \leq e/m \leq 0.5$ in the prestripper, and $0.25 \leq e/m \leq 1$ in the poststripper). The coarse reproduction of operating conditions necessary for the various beams, and the fine tuning required for beam optimization, presently consumes approximately 15% of the total usable machine time.

With the addition of the prestripper drift-tube magnetic quadrupole lenses and the more complicated injector transport system, the number of interdependent tuning parameters will have been increased to approximately 150, all of which will require tuning over a broad range. Control equipment to assist in the tuning will be necessary to maintain reasonable operating efficiency.

The planned-control system will be operated in conjunction with an existing computer and data storage system on a time sharing basis with HILAC experimenters. The system will consist of various beam-measuring devices and the necessary computer interface and accelerator-control equipment.

The program is expected to be carried out in two phases, the first concerned primarily with the coarse reproduction of the operating parameters determined by previous runs and stored in the computer, and the second, in which actual computer control of the system is achieved.

Vacuum System

The new prestripper cavity will be pumped with the existing 32-inch mercury diffusion pump. Backstreaming of the mercury is controlled by two -40° refrigerated baffles in series over the jet structure of the pump. Any mercury vapor which gets past these baffles is frozen on a -180° F chevron, where it remains until the chevron is warmed.

The rf grill over the opening in the cavity wall is made from flattened copper tubes soldered at each end into a water manifold. To reduce heating from any stray rf which may come through the grill the diffusion pump manifold is made of the same copper clad steel plates that formed the prestripper cavity.

As has been previously stated, the radial cracks in the endwall rf liners will be welded closed. This will reduce the surface area exposed to the main vacuum by approximately a factor of 2. The inside surfaces of the drift tubes will not be exposed as they are at present. There will be a welded joint at each drift tube stem bellows in place of the existing O-rings. Therefore, it is expected that the final operating pressure of the new cavity will be considerably less than the 1.4 microtorr now experienced.

Shielding

As has been mentioned previously, the cavity endwalls will be made of rectangular flame-cut mild steel plates. Since the building crane is unable to install the prestripper cavity as a unit, it was decided to install it in 3 sections. This decision affords some distinct advantages. The construction cost is considerably lower than for the previous design, and the rectangular endwalls lend themselves to a neat arrangement of the steel shielding around the cavity.

The diffusion pump will be moved to the south side of the prestripper, enabling the shielding wall on the north side to be continuous and unbroken and flush with the stiffening ribs. The cavity will be supported at the endwalls; the previous cavity supports located at the stiffening ribs will be used to support the north wall. The only openings in the north wall will be the annular spaces around the small oscillator transmission lines.

Previously, the prestripper shielding had to extend around the ends of the tank to reduce the amount of radiation which came through the knuckle at the outer radius of the endwall. With this weak spot absent, the shielding can be flush with the endplate. The roof shielding, too, will be flush at all sides and will have no openings. The endwall at the entrance of the cavity will be 6-inches thick to further reduce radiation in the control room. The exit endwall, as before, will be 4 1/2-inches thick. Openings in these endwalls at the beam line will be effectively plugged by the quadrupole magnets contained in the half-drift-tubes.

Scheduled Shutdown

It is planned to shut down the HILAC during the latter part of 1968. Removal of the existing prestripper and injector terminal will take considerable time. Installation of the new equipment will follow. Alignment and rf-conditioning will fill the remainder of the schedule. It is planned to have the modified HILAC back to full-time operation by February 1969.

References

1. C. E. Anderson and K. W. Ehlers, "A Source for Multiply-Charged Heavy Ions", Rev. Sci. Instr. 27, 809 (1956).

2. L. L. Reginato and B. H. Smith, "A 600 kV 10 mA DC Cockcroft-Walton Rectifier Using Silicon Diodes at 100 KC", March 2, 1965, UCRL-11783.

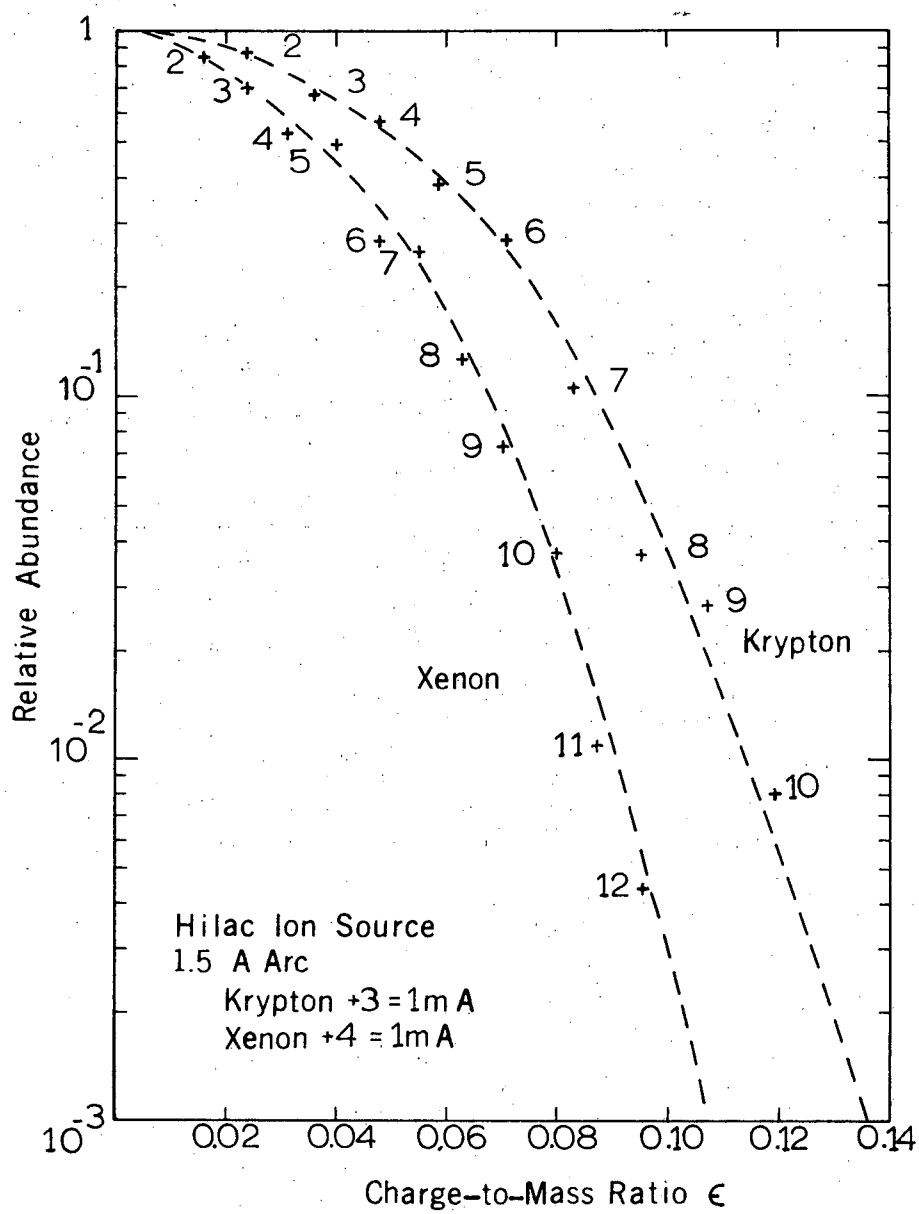

Relative Abundance of Krypton and Xenon Charge States from the Hilac Ion Source

Fig. 1

XBL 685-4842

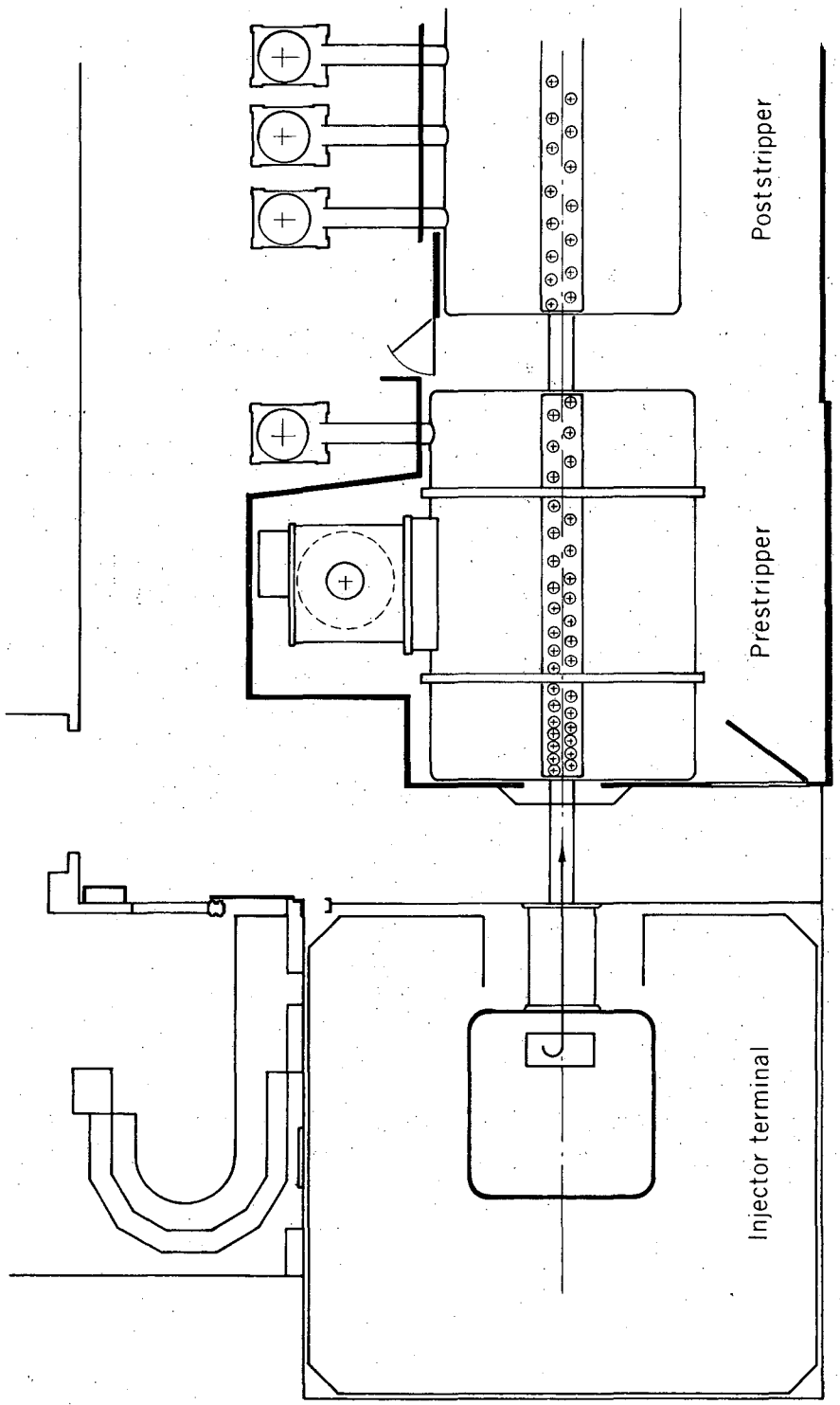

XBL 685 4843

Plan View of Existing HILAC

Fig. 2

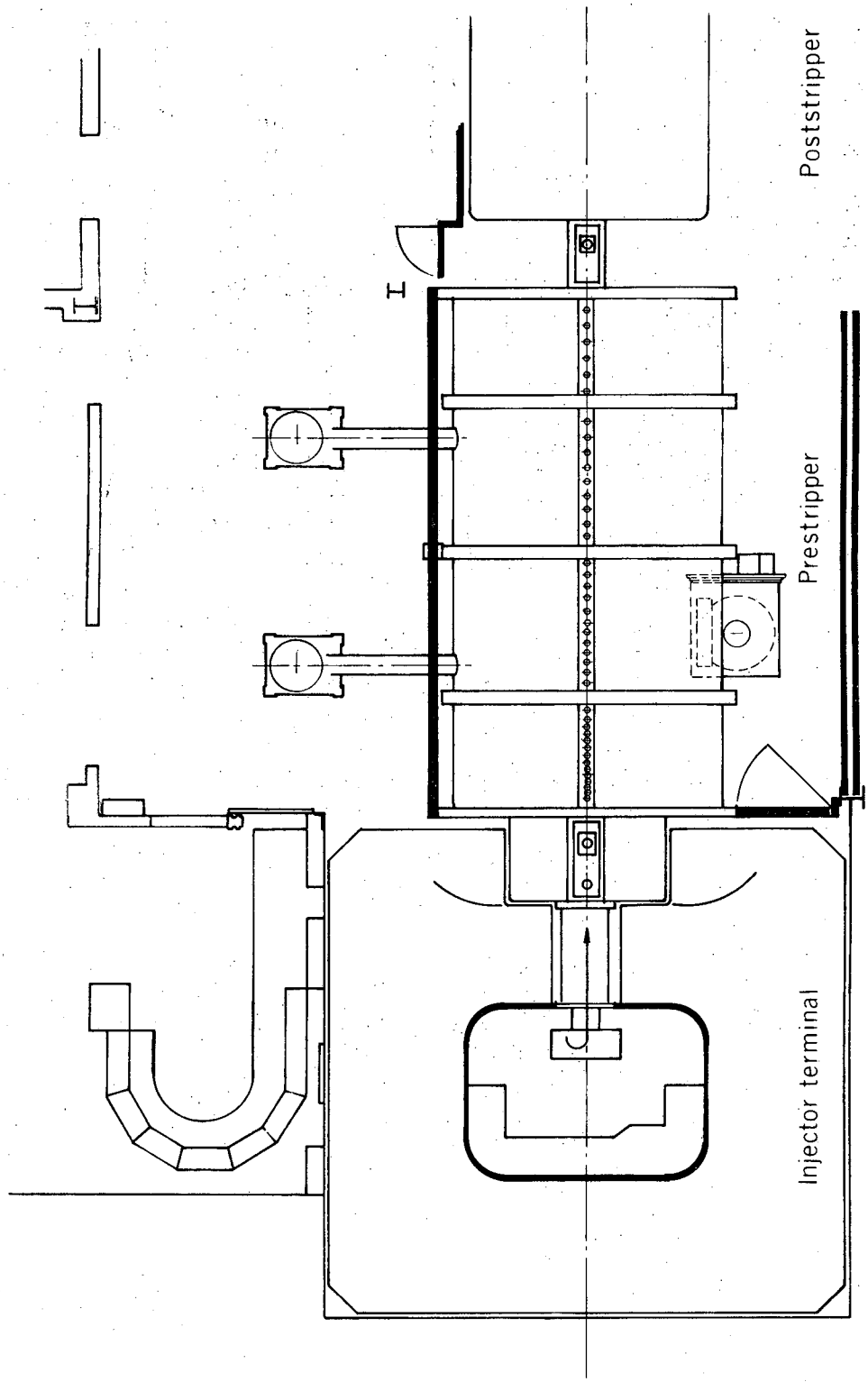

Plan view of Modified HILAC

Fig. 3

XBL 6[illegible]-[illegible]

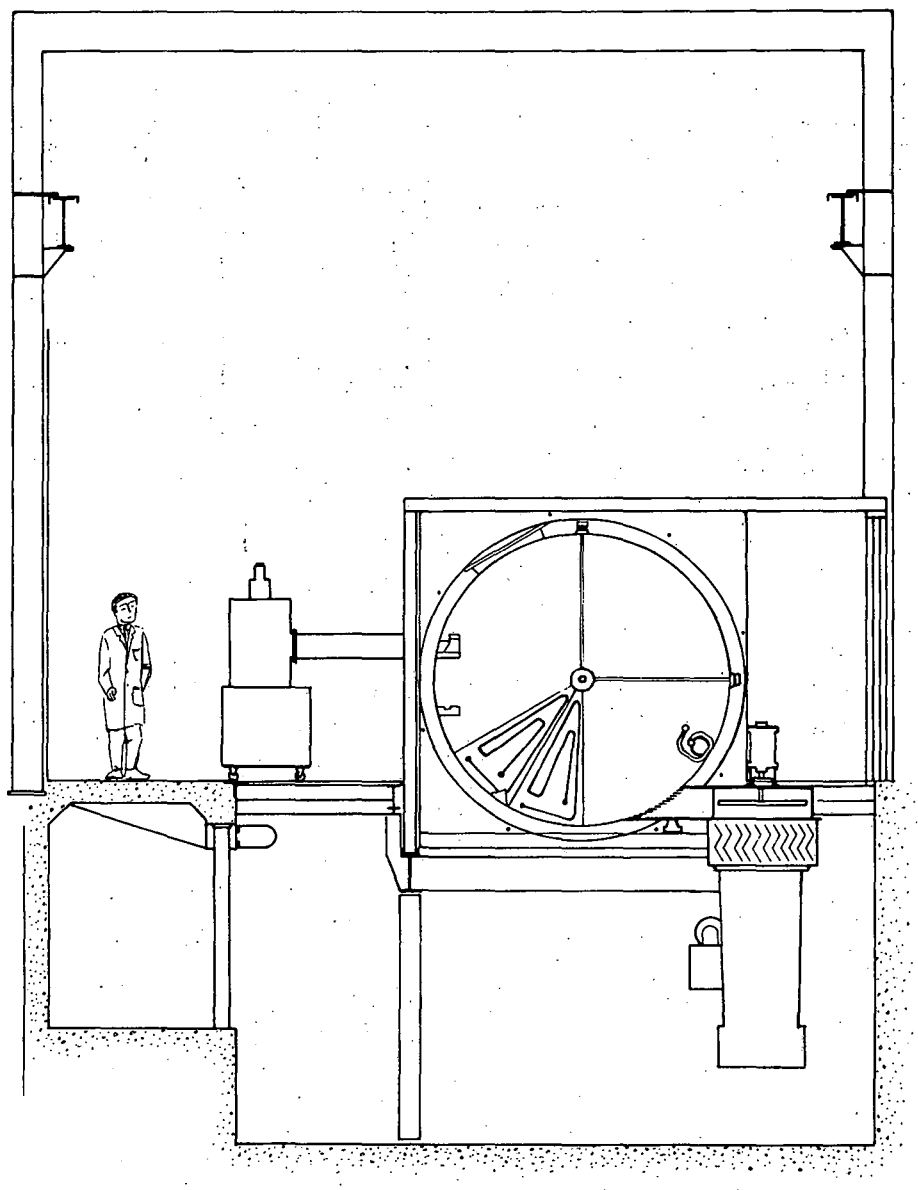

Elevation of Modified Prestripper

Fig. 4

XBL 685 4845

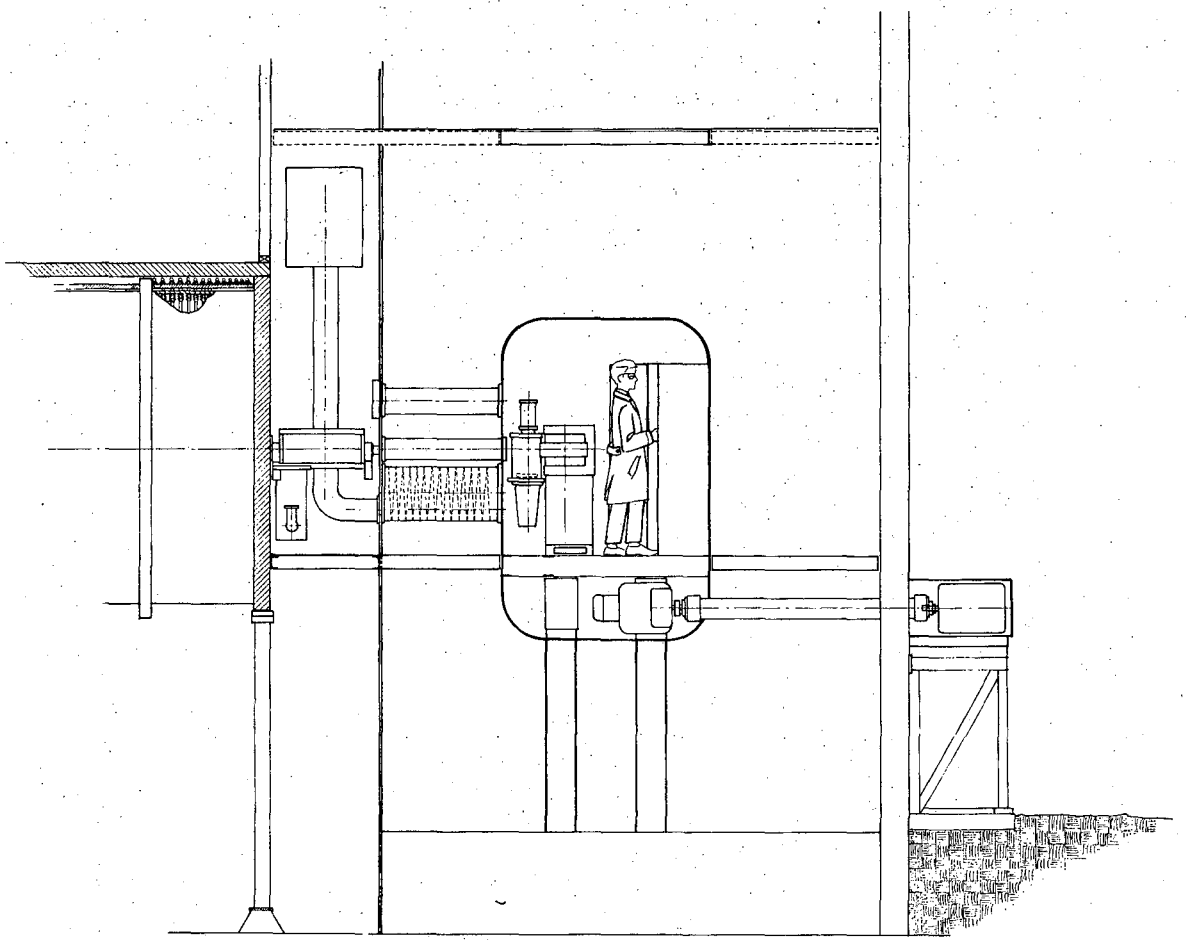

Elevation of modified Injector Terminal

Fig. 5

XBL 685 4846

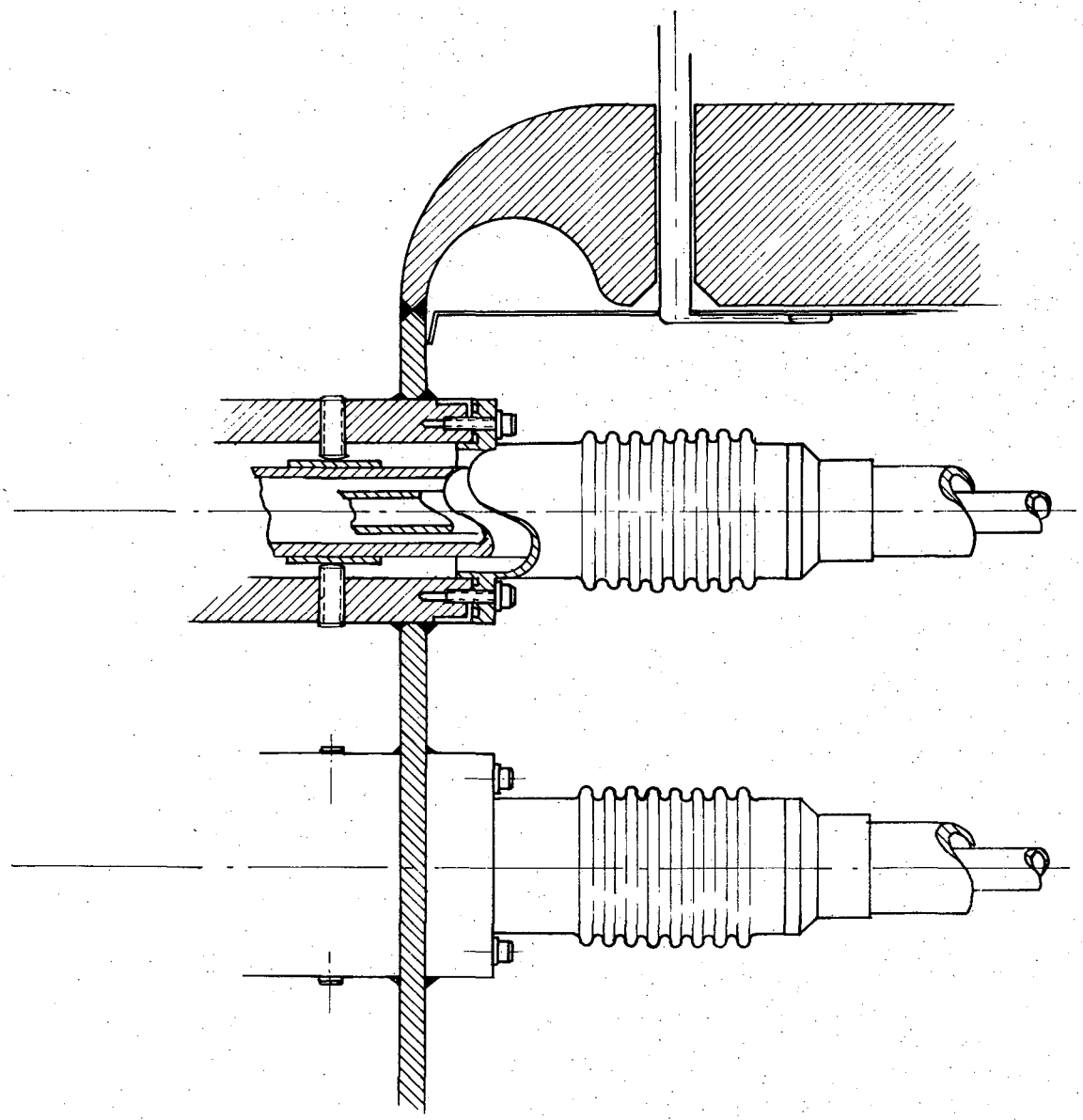

XBL 685 4847

Existing Prestripper Endwall Connection

Fig. 6

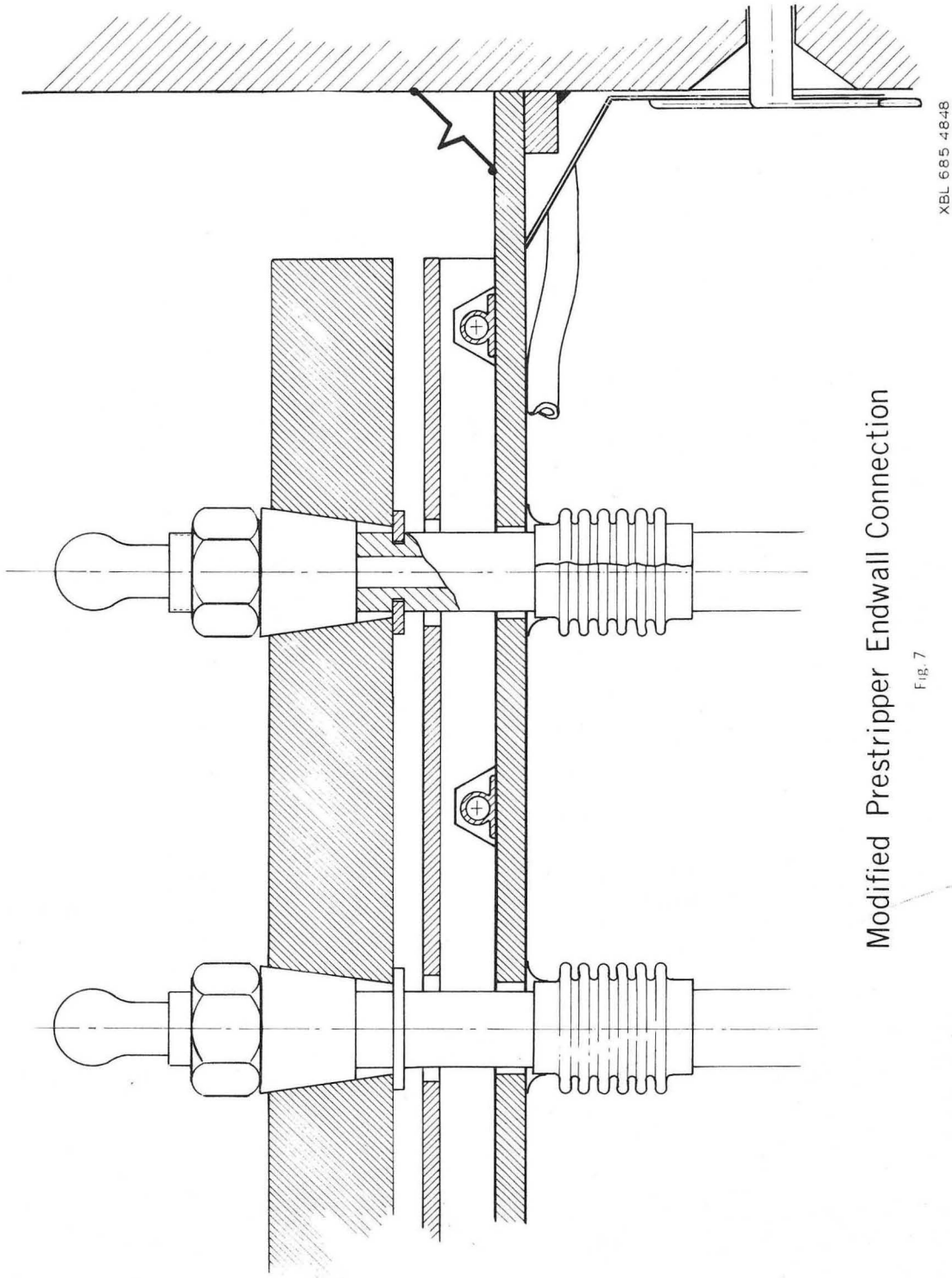

Modified Prestripper Endwall Connection

Fig. 7

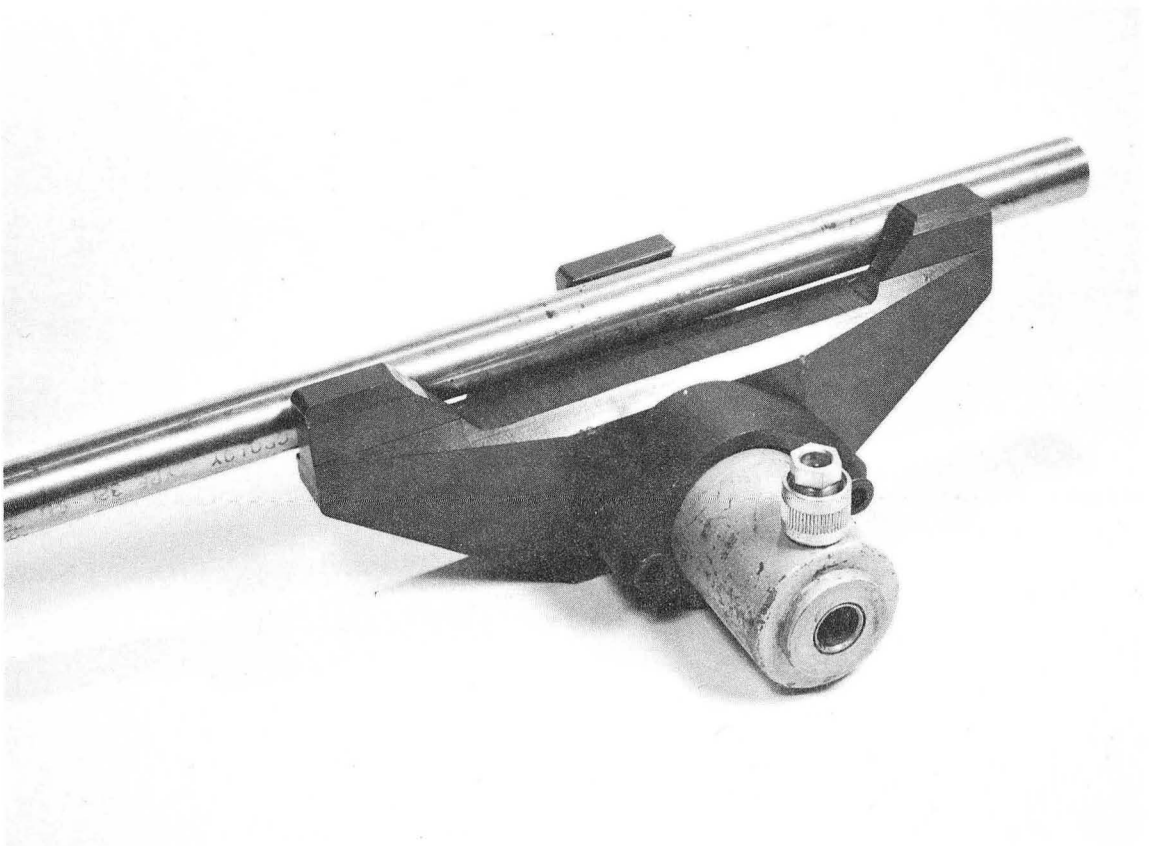

XBB 685-2704

Fig. 8. Drift Tube Stem Bender.

This report was prepared as an account of Government sponsored work. Neither the United States, nor the Commission, nor any person acting on behalf of the Commission:

A. Makes any warranty or representation, expressed or implied, with respect to the accuracy, completeness, or usefulness of the information contained in this report, or that the use of any information, apparatus, method, or process disclosed in this report may not infringe privately owned rights; or

B. Assumes any liabilities with respect to the use of, or for damages resulting from the use of any information, apparatus, method, or process disclosed in this report.

As used in the above, "person acting on behalf of the Commission" includes any employee or contractor of the Commission, or employee of such contractor, to the extent that such employee or contractor of the Commission, or employee of such contractor prepares, disseminates, or provides access to, any information pursuant to his employment or contract with the Commission, or his employment with such contractor.