UCRL-18302
cy. 2

University of California

Ernest O. Lawrence Radiation Laboratory

TWO-WEEK LOAN COPY

This is a Library Circulating Copy which may be borrowed for two weeks. For a personal retention copy, call Tech. Info. Division, Ext. 5545

LUMINESCENT REACTIONS OF $H(^2P)$

T. S. Wauchop and L. F. Phillips

July 1968

RECEIVED
LAWRENCE
RADIATION LABORATORY
JUL 29 1968
LIBRARY AND
DOCUMENTS SECTION

Berkeley, California

UCRL-18302
cy. 2

DISCLAIMER

This document was prepared as an account of work sponsored by the United States Government. While this document is believed to contain correct information, neither the United States Government nor any agency thereof, nor the Regents of the University of California, nor any of their employees, makes any warranty, express or implied, or assumes any legal responsibility for the accuracy, completeness, or usefulness of any information, apparatus, product, or process disclosed, or represents that its use would not infringe privately owned rights. Reference herein to any specific commercial product, process, or service by its trade name, trademark, manufacturer, or otherwise, does not necessarily constitute or imply its endorsement, recommendation, or favoring by the United States Government or any agency thereof, or the Regents of the University of California. The views and opinions of authors expressed herein do not necessarily state or reflect those of the United States Government or any agency thereof or the Regents of the University of California.

Submitted to Journal
of Chemical Physics

UCRL-18302
Preprint

UNIVERSITY OF CALIFORNIA

Lawrence Radiation Laboratory
Berkeley, California
AEC Contract No. W-7405-eng-48

LUMINESCENT REACTIONS OF $H(^2P)$

T. S. Wauchop and L. F. Phillips

July 1968

LUMINESCENT REACTIONS OF $H(^2P)$

T. S. Wauchop and L. F. Phillips*

Chemistry Department, University of Canterbury,
Christchurch, New Zealand

ABSTRACT

Hydrogen atoms were excited to the ^2P level by absorption of Lyman-α radiation. Relative intensities were measured for emission bands arising from primary reactions of $H(^2P)$ with O_2, N_2, NO, N_2O, CO, CO_2 and SO_2. The emitting species were all diatomic hydrides. The emission intensities observed with different reactants were all very similar, which suggests that the probability of obtaining an electronically excited hydride molecule from a reaction of $H(^2P)$ is near unity. Some emission due to secondary reactions was also observed.

* Present address: Inorganic Materials Research Division, Lawrence Radiation Laboratory, University of California, Berkeley, U.S.A.

Introduction

Reactions of $H(^2P)$ with N_2 and O_2 were previously studied by Tanaka and co-workers[1-3]. Among other results of this work, they reported[3] an emission band of NH near 3000Å which was tentatively attributed to the production of electronically excited NH in the primary reaction of $H(^2P)$ with N_2. In a more recent communication[4] we described a method of distinguishing luminescence arising from primary reactions of $H(^2P)$ from other light emitted by the reaction system, and used the method to show that electronically excited OH is produced in the reaction of $H(^2P)$ with O_2. In this method the Lyman-α lamp is operated from the ac mains so that its output at 1216Å is modulated at 100 Hz. Consequently the population of short-lived $H(^2P)$ is modulated at 100 Hz, and any luminescence arising from allowed transitions of electronically excited species produced by its reactions is therefore also modulated in phase with the lamp. This luminescence can be distinguished from scattered light from the lamp, and from emission by excited species produced by photolysis of the molecular reactant or of likely trace impurities such as water,[5,6] by its dependence on the simultaneous presence of both ground-state atomic hydrogen and the molecular reactant.

The aim of the present work was to attempt to verify that excited NH is produced in the reaction of $H(^2P)$ with N_2, to detect excited products of other simple reactions of $H(^2P)$, and to estimate the relative intensities of the emission features obtained with different reactants.

Experimental

Hydrogen mixed with argon was partially dissociated in a microwave discharge before exposure to Lyman-α radiation in the conical reaction vessel shown in Fig. 1. The reactant gas was admitted through the jet J. The water-cooled hydrogen-neon lamp L was similar to that described by Tanaka and McNesby.[1] The intensity of Lyman-α radiation was monitored

with the ionization chamber I which was filled with either NO or CS_2.[7] The McPherson model 218 0.3m vacuum spectrometer M could be fitted with a grating blazed at either 1500Å or 5000Å, for monitoring either the scattered Lyman-α radiation or the near ultraviolet chemiluminescence. The shape of the reaction vessel was such that the spectrometer viewed a large volume of reaction but did not receive direct reflections from the lamp. The lithium fluoride windows W were used for an hour at most, after which it was necessary to anneal them for eight hours at 500°C.[8]

At the exit slit of the spectrometer was an E.M.I. 9514SA photomultiplier which could be used with a sodium solicylate coated window if required. The output from the photomultiplier was taken to a 100Hz tuned amplifier and phase-sensitive detector, the reference signal for the detector being derived from the 50-cycle mains. If the radiation whose intensity was to be measured was not modulated a field-effect chopper was activated at the input to the amplifier. The variation of spectrometer and detector sensitivity with wavelength was determined from the response to a tungsten strip-filament lamp of known colour temperature.

Hydrogen was purified by passage over hot copper and through liquid air traps. Welding grade dry argon was also purified over hot copper then through solid CO_2 and liquid air traps, and the reactant gases, except NO, were taken from Matheson research-grade cylinders and dried through liquid air traps. The NO was purified by low temperature vacuum distillation.

In a typical experiment the partial pressures in the reaction vessel were Ar: 1.5 torr, H_2: 1.0 torr, H: 0.2 torr, and reactant 0.1 torr. With the Lyman-α lamp and microwave discharge turned on, and the input chopper turned off, the spectrometer scanned the visible and near u.v. regions to detect emission features that might have arisen from reactions of $H(^2P)$. All likely bands were tested for dependence on the presence of

the reactant and on the microwave discharge. Finally, the spectrometer was scanned through the same spectral region with the input chopper turned on, to detect any unmodulated luminescence due to secondary reactions.

Results and discussion

In Table I are summarised the modulated emission features that were observed with the various reactants, the intensities of these features relative to the 3064Å OH band arising from the reaction with O_2, and the reactions which are here proposed to account for the various emissions. Oxygen and nitrogen are particularly suitable reactants for this kind of study because of their low extinction coefficients at 1216Å. However, although the other reactants do adsorb more or less strongly in this region,[9] the very low intensity of the emission observed from excited species produced by direct photolysis[6] appears to rule out the reaction of such species with ground state atomic and molecular hydrogen as a possible mechanism of excitation for our observed luminescence. Reactions of $H(^2P)$ with the products of previous reactions, or of photolysis, could account for some of the modulated emission, but these processes are believed to be unimportant in comparison with reactions involving the much more abundant reactant molecules. Reactions of ground state H with the reactants used here are all very slow. Because of variations in the output of the lamp and in the transparency of the lithium fluoride windows, combined with the likelihood that some of the reactants absorbed a significant amount of Lyman-α radiation, the relative intensities given in the Table are believed to be correct only to within a factor of 2. The most notable feature of these intensity figures is that the total number of quanta emitted per reactant molecule is remarkably constant, the range of variation from the median value being less than a factor of three. In view of the differing natures of the reactants, which would normally be expected to lead to widely

differing efficiencies of light emission for a given type of chemiluminescent process, the lack of discrimination found here strongly suggests that the probability that a reaction of $H(^2P)$ will give rise to an electronically excited hydride molecule is close to unity.

Some features that might have been expected to be observed do not appear in Table I, the most notable being OH emission from the reactions with NO, N_2O, CO_2, and SO_2. In the case of SO_2 it is believed that the OH emission was probably present but was largely obscured by the SH emission which occurs in the same region. With the others the OH bands could have been weakly present, the lower limit of detection being about 5% of the intensity of emission obtained with O_2.

In the list of reactions which are proposed to account for the luminescence there is necessarily some uncertainty because the observations yield information about the electronic state of only one of the products. In most cases it has been assumed that the other product is in its ground electronic state, although there is always sufficient energy available for both products to be excited. In process (2), however, a reaction giving $N(^4S)$ would appear to involve too large a change of spin, and the nitrogen atom is therefore shown being produced in its first excited state, namely ^2D. There is in fact sufficient energy available to excite the nitrogen atom to the higher ^2P level. In reactions (7) and (8) the concerted process needed to give molecular oxygen as a product is considered highly improbable. The processes shown have an analogue in one of the primary steps of the reaction of atomic nitrogen with NO_2.[10]

The emission observed from the reaction systems when the field-effect chopper was activated necessarily included the modulated features listed in Table I, together with any un-modulated bands. In the reaction with O_2 some unmodulated OH emission was observed with $v' = 1$; this is attributable to

recombination of ground state O and H atoms.[11] In the reaction with N_2 the analogous process yields NH bands with $v' = 1$ only,[12] so that there was no marked difference between the modulated emission and the total emission in this case. The relationship between the emission from the reaction of N and H atoms and the dissociation energy of NH is discussed elsewhere.[13] The reaction with NO gave OH bands in the unmodulated emission, even though these were not detected in the modulated emission. No bands of NO itself were observed in this case. In the reaction of N_2O, bands arising from both OH and the $B^2\Pi$ state of NO were present in the unmodulated signal, in addition to the NH bands already observed in the modulated emission. In the reaction with CO_2 the OH bands were present in the unmodulated emission, though absent from the modulated signal. No atomic lines which might be attributed to reaction products, for example the 5577Å line arising from $O(^1S)$, were observed. This is probably a reflection on the sensitivity of our detection system for unmodulated light rather than on the ability of the reactions to produce excited atoms.

Acknowledgements

We are grateful to Dr. M. J. McEwan for helpful discussions. This work was supported by the New Zealand Universities Research Committee and by Grant AF-AFOSR-1265-67 from the United States Air Force Office of Scientific Research. The support of the United States Atomic Energy Commission is gratefully acknowledged in preparation of the manuscript.

References

1. I. Tanaka and J. R. McNesby, J. Chem. Phys. 36, 3170 (1962).
2. I. Koyano and I. Tanaka, J. Chem. Phys. 40, 895 (1964).
3. H. P. Broida and I. Tanaka, (unpublished results quoted in Ref. 1).
4. T. S. Wauchop and L. F. Phillips, J. Chem. Phys. 47, 4281 (1967).
5. H. Neuman and A. Terenin, Acta Physicochem. U.R.S.S. 5, 465 (1936).
6. R. A. Young, G. Black and T. G. Slanger, J. Chem. Phys. 48, 2067 (1968).
7. J. H. Carver and P. Mitchell, J. Sci. Inst. 41, 555 (1964).
8. P. Warneck, J. opt Soc. Am. 55, 921 (1965).
9. J. R. McNesby and H. Okabe, Advances in Photochemistry 3 157 (1964).
10. L. F. Phillips and H. I. Schiff, J. Chem. Phys. 42 3171 (1965).
11. C. B. Spindler, S. Tiktin and H. I. Schiff, Nature 214 1006 (1967); Disc. Faraday Soc. (Molecular Dynamics of Chemical Reactions), 1967, in press.
12. R. F. Oldman and H. P. Broida, private communication, and this work.
13. L. F. Phillips, Lawrence Radiation Laboratory, Report No. UCLRL-18180 University of California, Berkeley, 1968.

TABLE I

Reactant:	Bands:	Origin:	v'	Normalized Intensity:	Process:
0.24 torr O_2	OH $A^2\Sigma$-$X^2\Pi$	3064Å	0	1.0 (0,0)	(1) H (^2P) + O_2 ($^3\Sigma$) → OH ($^2\Sigma$) + O (^3P)
0.10 torr N_2	NH $A^3\Pi$-$X^3\Sigma$	3360Å	2,1,0	1.15 (0,0)	(2) H (^2P) + N_2 ($^1\Sigma$) → NH ($^3\Pi$) + N (^2D)
				0.30 (2,1)	
				0.94 (1,1)	
0.10 torr NO	NH $A^3\Pi$-$X^3\Sigma$	3360Å	2,1,0	1.77 (0,0)	(3) H (^2P) + NO ($^2\Pi$) → NH ($^3\Pi$) + O (^3P)
				0.52 (2,1)	
				1.42 (1,1)	
0.10 torr N_2O	NH $A^3\Pi$-$X^3\Sigma$	3360Å	2,1,0	0.52 (0,0)	(4) H (^2P) + N_2O (^1A) → NH ($^3\Pi$) + NO ($^2\Pi$)
				0.37 (2,1)	
				0.49 (1,1)	
0.20 torr CO	CH $C^2\Sigma$-$X^2\Pi$	3143Å	0	0.47 (0,0)	(5) H (^2P) + CO ($^1\Sigma$) → CH ($^2\Sigma$) + O (^3P)
	OH $A^2\Sigma$-$X^2\Pi$	3064Å	0	0.30 (0,0)	(6) H (^2P) + CO ($^1\Sigma$) → OH ($^2\Sigma$) + C (^3P)
0.12 torr CO_2	CH $C^2\Sigma$-$X^2\Pi$	3143Å	0	0.66 (0,0)	(7) H (^2P) + CO_2 ($^1\Sigma$) → CH ($^2\Sigma$) + 2O (^3P)
0.04 torr SO_2	SH $A^2\Sigma$-$X^2\Pi$	3237Å	0	1.97 (0,0)	(8) H (^2P) + SO_2 ($^1A_1$) → SH ($^2\Sigma$) + 2O (^3P)

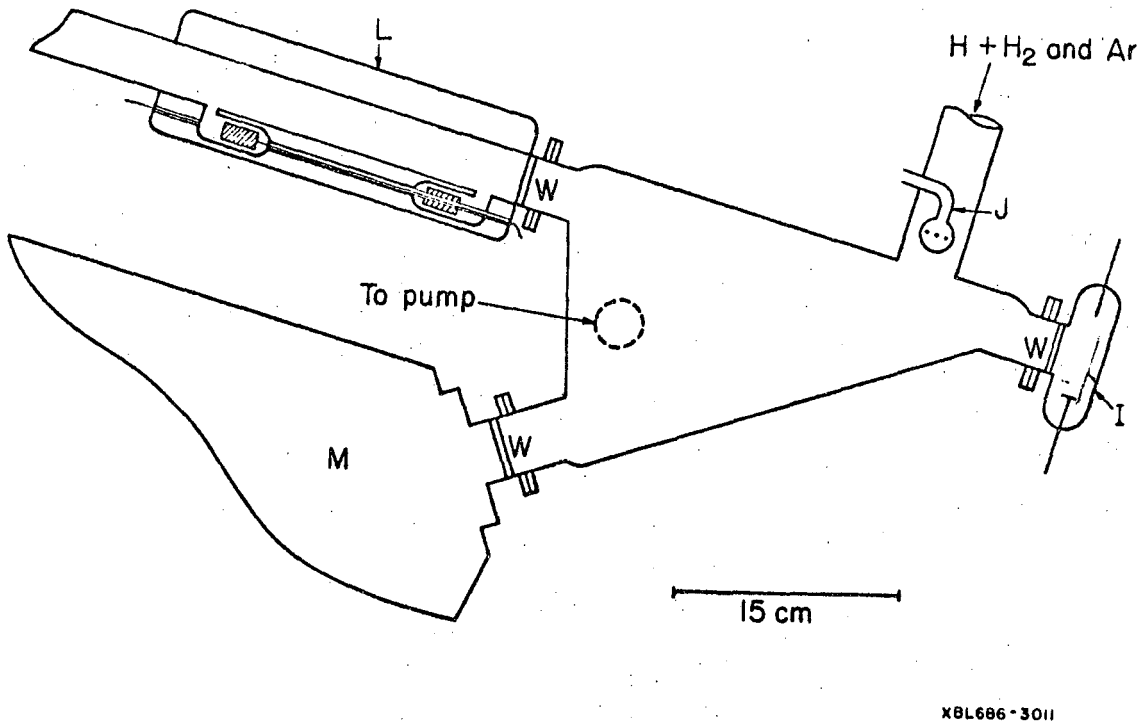

Fig. 1 Reaction vessel with lamp L and ionization chamber I. M is a McPherson model 218 vacuum monochromator, W indicates a lithium fluoride window, and J is the reactant inlet jet.

This report was prepared as an account of Government sponsored work. Neither the United States, nor the Commission, nor any person acting on behalf of the Commission:

A. Makes any warranty or representation, expressed or implied, with respect to the accuracy, completeness, or usefulness of the information contained in this report, or that the use of any information, apparatus, method, or process disclosed in this report may not infringe privately owned rights; or

B. Assumes any liabilities with respect to the use of, or for damages resulting from the use of any information, apparatus, method, or process disclosed in this report.

As used in the above, "person acting on behalf of the Commission" includes any employee or contractor of the Commission, or employee of such contractor, to the extent that such employee or contractor of the Commission, or employee of such contractor prepares, disseminates, or provides access to, any information pursuant to his employment or contract with the Commission, or his employment with such contractor.