UCRL-18318
cy. 2

University of California

Ernest O. Lawrence Radiation Laboratory

TWO-WEEK LOAN COPY

This is a Library Circulating Copy which may be borrowed for two weeks. For a personal retention copy, call Tech. Info. Division, Ext. 5545

MAGNETIC SHIELDS FOR SUPERCONDUCTING BENDING AND QUADRUPOLE MAGNETS

Robert B. Meuser

June 24, 1968

RECEIVED
LAWRENCE
RADIATION LABORATORY
JUL 19 1968
LIBRARY AND
DOCUMENTS SECTION

Berkeley, California

UCRL-18318
cy. 2

DISCLAIMER

This document was prepared as an account of work sponsored by the United States Government. While this document is believed to contain correct information, neither the United States Government nor any agency thereof, nor the Regents of the University of California, nor any of their employees, makes any warranty, express or implied, or assumes any legal responsibility for the accuracy, completeness, or usefulness of any information, apparatus, product, or process disclosed, or represents that its use would not infringe privately owned rights. Reference herein to any specific commercial product, process, or service by its trade name, trademark, manufacturer, or otherwise, does not necessarily constitute or imply its endorsement, recommendation, or favoring by the United States Government or any agency thereof, or the Regents of the University of California. The views and opinions of authors expressed herein do not necessarily state or reflect those of the United States Government or any agency thereof or the Regents of the University of California.

UCRL-18318
UC-37 Instruments
TID-4500 (52nd Ed.)

UNIVERSITY OF CALIFORNIA

Lawrence Radiation Laboratory
Berkeley, California

AEC Contract No. W-7405-eng-48

MAGNETIC SHIELDS FOR SUPERCONDUCTING BENDING AND QUADRUPOLE MAGNETS

Robert B. Meuser

June 24, 1968

Printed in the United States of America
Available from
Clearinghouse for Federal Scientific and Technical Information
National Bureau of Standards, U. S. Department of Commerce
Springfield, Virginia 22151
Price: Printed Copy $3.00; Microfiche $0.65

MAGNETIC SHIELDS FOR SUPERCONDUCTING BENDING AND QUADRUPOLE MAGNETS*

Robert B. Meuser

Lawrence Radiation Laboratory
University of California
Berkeley, California

June 24, 1968

ABSTRACT

A saddle-shaped winding, circular in cross section, will produce a uniform or quadrupole field. A concentric circular iron shield will reduce the stray field, reduce the stored energy, and reduce the required ampere-turns. If the thickness of the shield is properly distributed the field distribution in the aperture will be unchanged even though the shield saturates. Unsymmetrical shields may be used where the width must be minimized. The weight of the shield for a bending magnet is nearly independent of its size, while the weight of the shield for a quadrupole magnet decreases with increasing size. The shield has little influence on the mechanical stresses.

*Work done under the auspices of the U. S. Atomic Energy Commission.

WHY WE MIGHT USE MAGNETIC SHIELDING

Superconducting saddle-shaped windings (Fig. 1) can be used to produce magnetic fields for bending (dipole) or focusing (quadrupole) charged-particle beams. Iron shields suitably situated around the windings will

(a) Reduce the stray field from the magnet, which might otherwise interfere with the optics of adjacent beams, interfere with the operation of nearby equipment, and possibly also constitute a safety hazard;

(b) Shield the beam going through the magnet from the stray field produced by magnets on adjacent beams;

(c) Reduce the ampere-turns required to produce a given field, or conversely, increase the field for a given number of ampere-turns;

(d) Reduce the stored energy of the magnet;

(e) Reduce the effect of iron situated unsymmetrically about the magnet upon the quality of the field and the forces on the winding.

In this report we will consider the design of the iron shielding and its effect on the magnet design and performance.

ANALYTICAL MODEL; THIN, CIRCULAR WINDING

If the saddle-shaped winding is thin in the radial dimension, circular in cross section, and carries longitudinal electric currents distributed according to $\cos\theta$ or $\cos 2\theta$, a uniform or quadrupole field will be produced in the aperture. A winding having an infinitesimal thickness would serve no useful purpose. However, such a thin winding may be used as a convenient and reasonable approximation to more practical thick windings for the mathematical analysis. Non-circular apertures may be desired for certain applications, but the effect of iron shielding on the characteristics of a winding having a circular aperture is at least qualitatively similar to that for a non-circular aperture. In this report, therefore, we primarily consider thin circular windings, but some information on other types of windings is included.

HOW A SHIELD WORKS

Let us consider the effect of placing a concentric circular iron shield close to a thin circular winding. The flux at the inner surface of the iron is perpendicular to the surface and its density is greatest opposite the poles (Fig. 2). We call that maximum value B_a. If the iron is too close to the coil, B_a will be too high, but by moving the iron boundary outward we can find an iron boundary radius such that B_a equals some limiting value which, for the sake of discussion, we will take to be the saturation induction of the iron, B_{sat}. As we increase the iron radius further, B_a continues to decrease. The iron collects all of the flux entering a half-pole and routes to

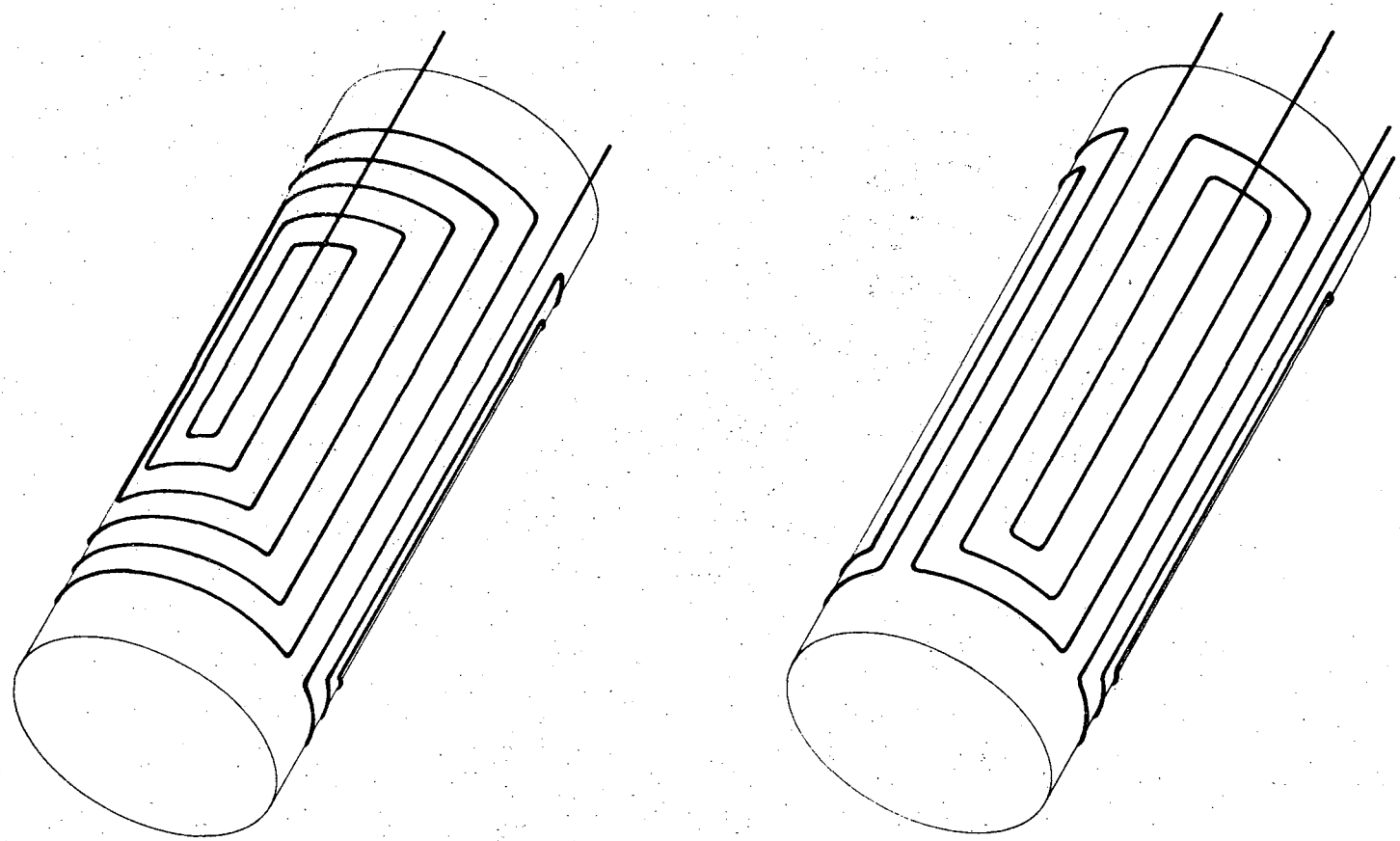

Bending magnet schematic

Quadrupole magnet schematic

XBL 686 4865

Fig. 1. Bending and quadrupole magnets; schematic.

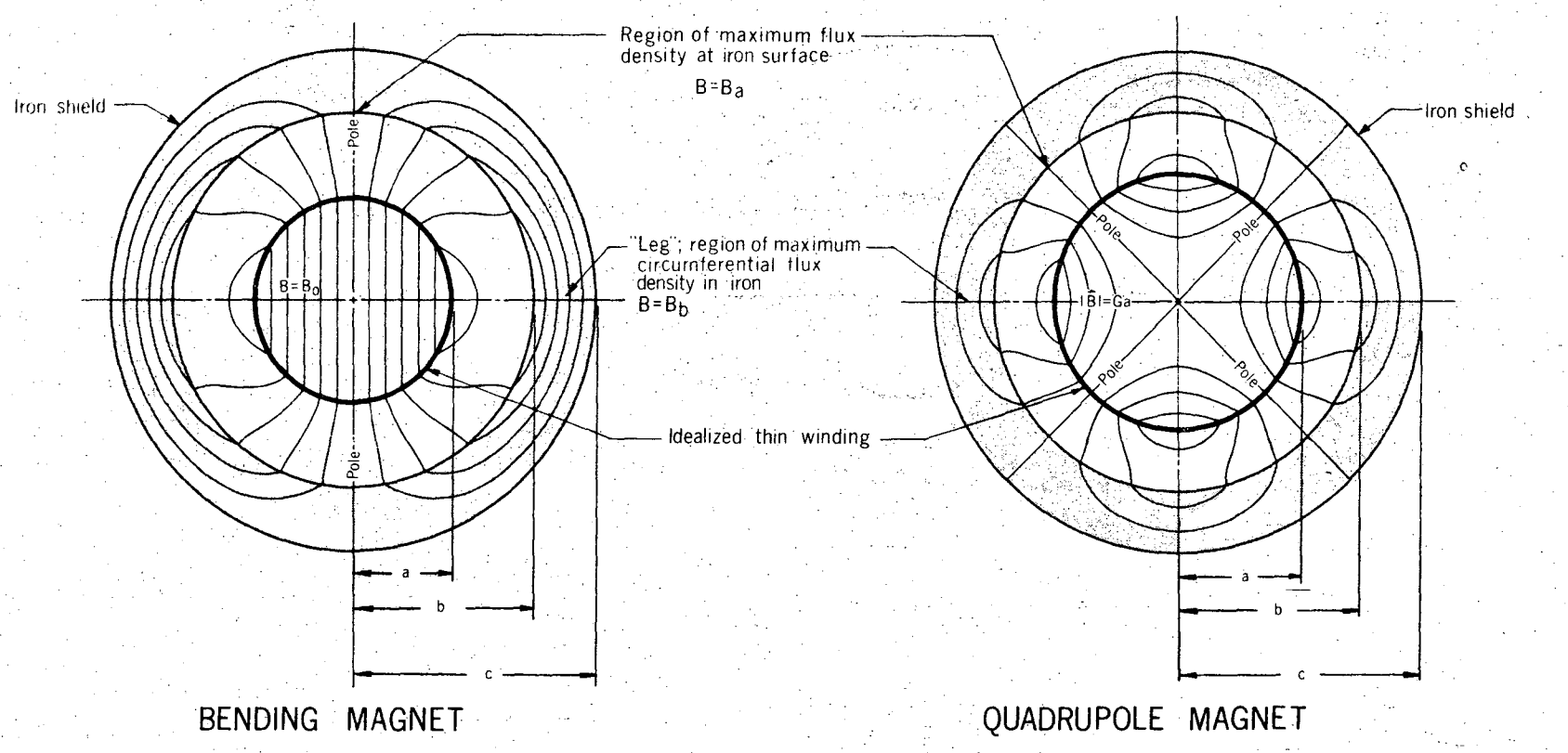

Fig. 2. Flow of magnetic flux, and nomenclature.

the adjacent half-pole of opposite sign -- the total flux carried by the iron is a maximum at a point midway between poles (the "leg"), and the iron must be thick enough there so that the flux density does not exceed the limiting value.

SHIELD DIMENSIONS REQUIRED

The flux density at the inner edge of the iron is given by Eqs. 4(a) and 4(b) of Table I. In the region of the legs the flux lines are approximately concentric circles, so if the permeability is uniform the flux density varies inversely with radius. The total flux is then*

$$\phi = B_b \, b \log (c/d),$$

where B_b is the maximum flux density, which occurs at the inside surface. For the limiting case where $B_a = B_b = B_{sat}$, we find

$$c/b = e = 2.718 \text{ for bending magnets,}$$

$$c/b = e^{1/2} = 1.646 \text{ for quadrupole magnets.}$$

Such large ratios of outside to inside diameters are undesirable, and this leads one to ask whether they are really necessary. We know from experience that, for a high flux density, the nonuniformity of permeability tends to make the flux density uniform. It is probably sufficient, therefore, and certainly more practical, to make the legs only thick enough so that the <u>average</u> flux density across the leg is B_{sat}. Then

$$\phi = B_b (c-b),$$

where now B_b is the average flux density across the leg. Now for the limiting case where $B_a = B_b = B_{sat}$, we find

$$c/b = 2.0 \text{ for bending magnets,}$$

$$c/b = 1.5 \text{ for quadrupole magnets.}$$

As the iron radius is increased beyond the minimum value, that for which $B_b = B_{sat}$, the thickness becomes relatively less, and the above two ways of determining the required iron thickness converge upon the same value. The second method is used as the basis for determining the shield thickness for all the results presented in this report.

Figures 3 to 6 show how the outside radius and cross section varies with b/a and the ratio B_b/B_0; B_b may be regarded as a constant approximately equal to B_{sat}. For bending magnets, only a small saving in shield weight may be made by making the shield larger in radius. The weight approaches a constant value for large values of b/a. For quadrupoles, considerable weight may be saved by increasing the shield radius. The weight becomes inversely proportional to the inside radius for large values of b/a.

*See Fig. 2 and page 21 for nomenclature.

Table I. Equations for circular thin winding with concentric iron shield.

		Bending magnet	Quadrupole magnet	Eq. No.
Current	I	$= \frac{B_0 a}{0.1\pi} \frac{(b/a)^2}{(b/a)^2+1}$	$= \frac{Ga^2}{0.1\pi} \frac{(b/a)^4}{(b/a)^4+1}$	1(a), (b)
Lineal current density	I_ℓ	$= \frac{I}{2a} = \frac{B_0}{0.2\pi} \frac{(b/a)^2}{(b/a)^2+1}$	$= \frac{I}{2a} = \frac{Ga}{0.2\pi} \frac{(b/a)^4}{(b/a)^4+1}$	2(a), (b)
Stored energy In aperture Total	 E_{in} E	 $= B_0^2 a^2/8$ $= E_{in} \frac{2(b/a)^2}{(b/a)^2+1}$	 $= G^2 a^4/16$ $= E_{in} \frac{2(b/a)^4}{(b/a)^4+1}$	3(a), (b)
Flux density at iron surface at pole	B_a	$= B_0 \frac{2}{(b/a)^2+1}$	$= Ga \frac{2(b/a)}{(b/a)^4+1}$	4(a), (b)
Total flux entering a half pole	ϕ	$= B_a a$	$= \frac{1}{2} B_a a$	5(a), (b)

FIELD QUALITY INDEPENDENT OF EXCITATION

In principle, almost any shape can be selected for the iron shield, and the winding can be tailored to produce the desired field distribution in the aperture for a particular field level. In general, as the field level is increased to where saturation occurs in part of the shield, the quality of the field in the aperture deteriorates. Compensating windings can be employed to extend the useful range of operation, but it is far better to have magnets that are inherently capable of wide-range operation without compensating windings. It is indeed possible to make such magnets.

If a thin circular winding is enclosed by a concentric circular tube having a uniform permeability, the magnitude of the field inside the aperture is increased, but the field distribution is unchanged. If the iron saturates uniformly, then at field levels above that causing saturation the field inside the aperture can be calculated as follows: Up to the level where the iron saturates, the field in the aperture is that for $\mu \gg 1$ in the shield. For the additional excitation the additional field corresponds to that for an unshielded magnet. The total field is the sum of the two, and since both fields have the same distribution the total field will have that distribution also. In other words, saturation of the iron will cause no degradation of the quality of the field.

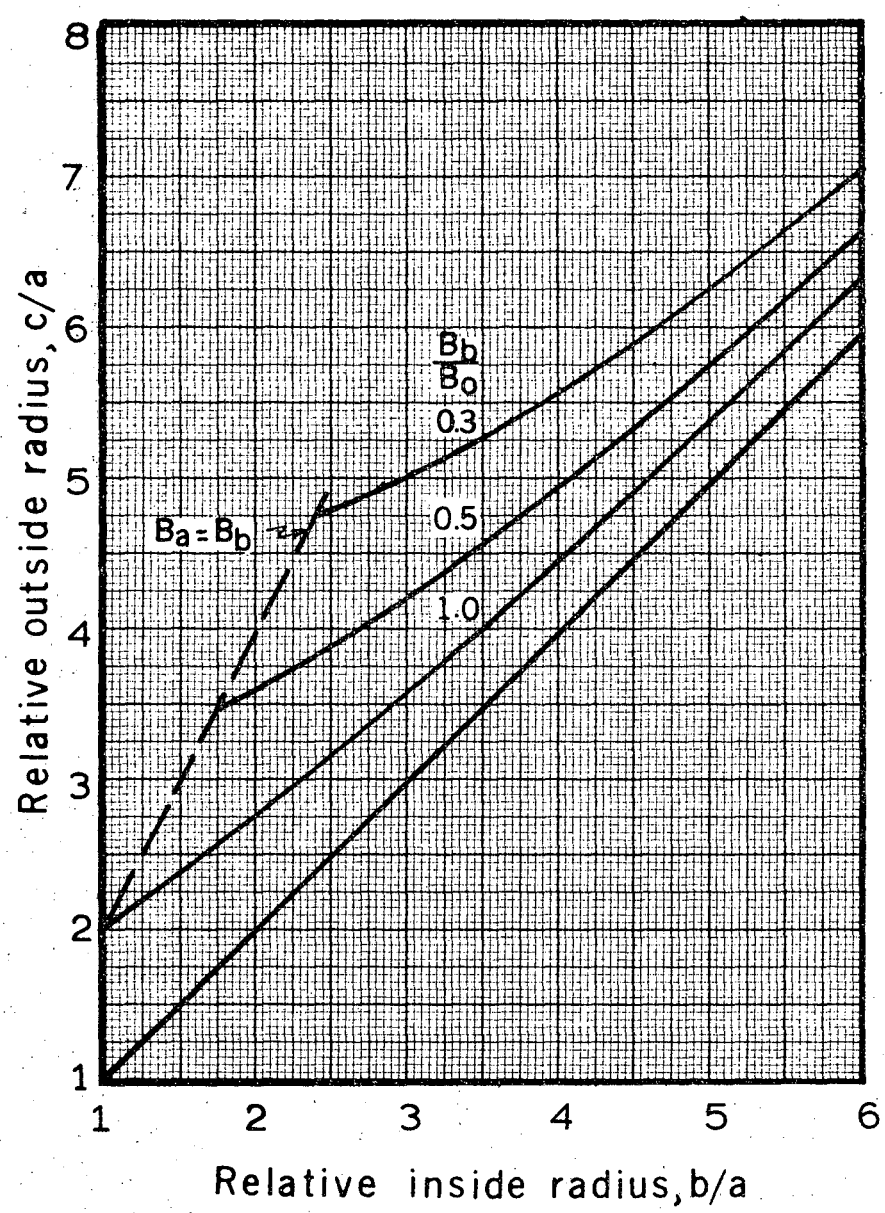

XBL686-4878

Fig. 3. Outside shield radius: bending magnet.

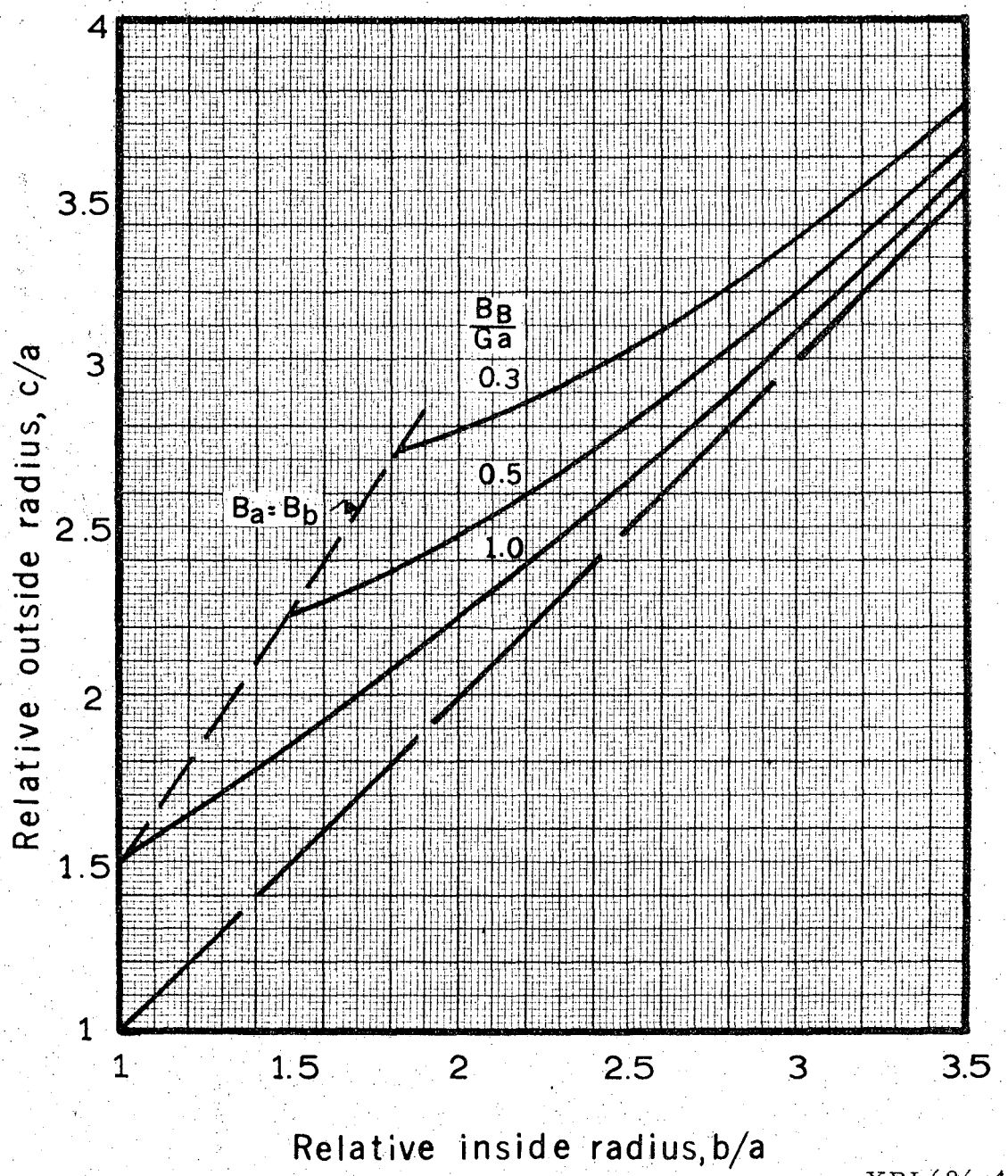

XBL686-4877

Fig. 4. Outside shield radius; quadrupole magnet.

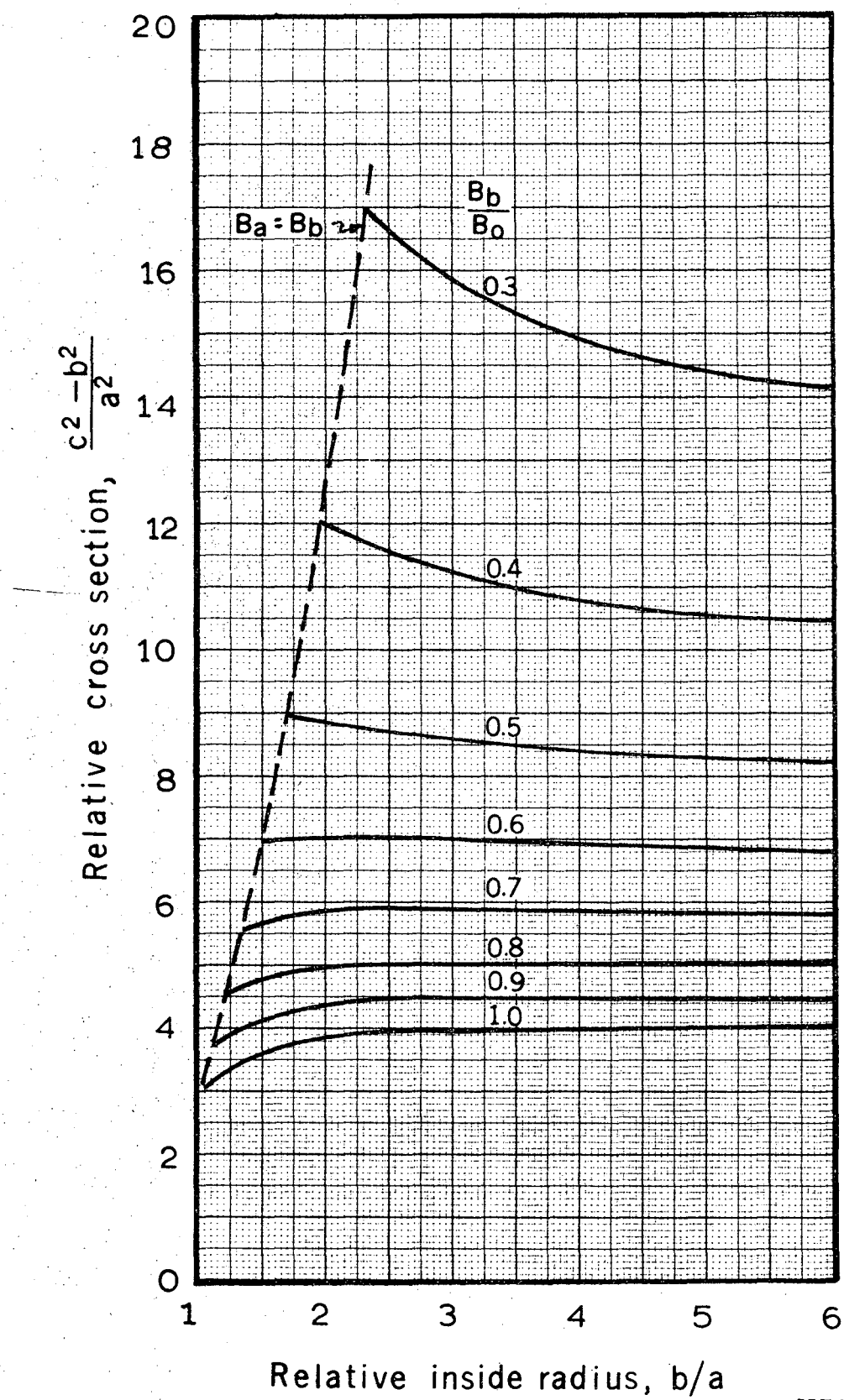

XBL686-4879

Fig. 5. Shield cross section; bending magnet.

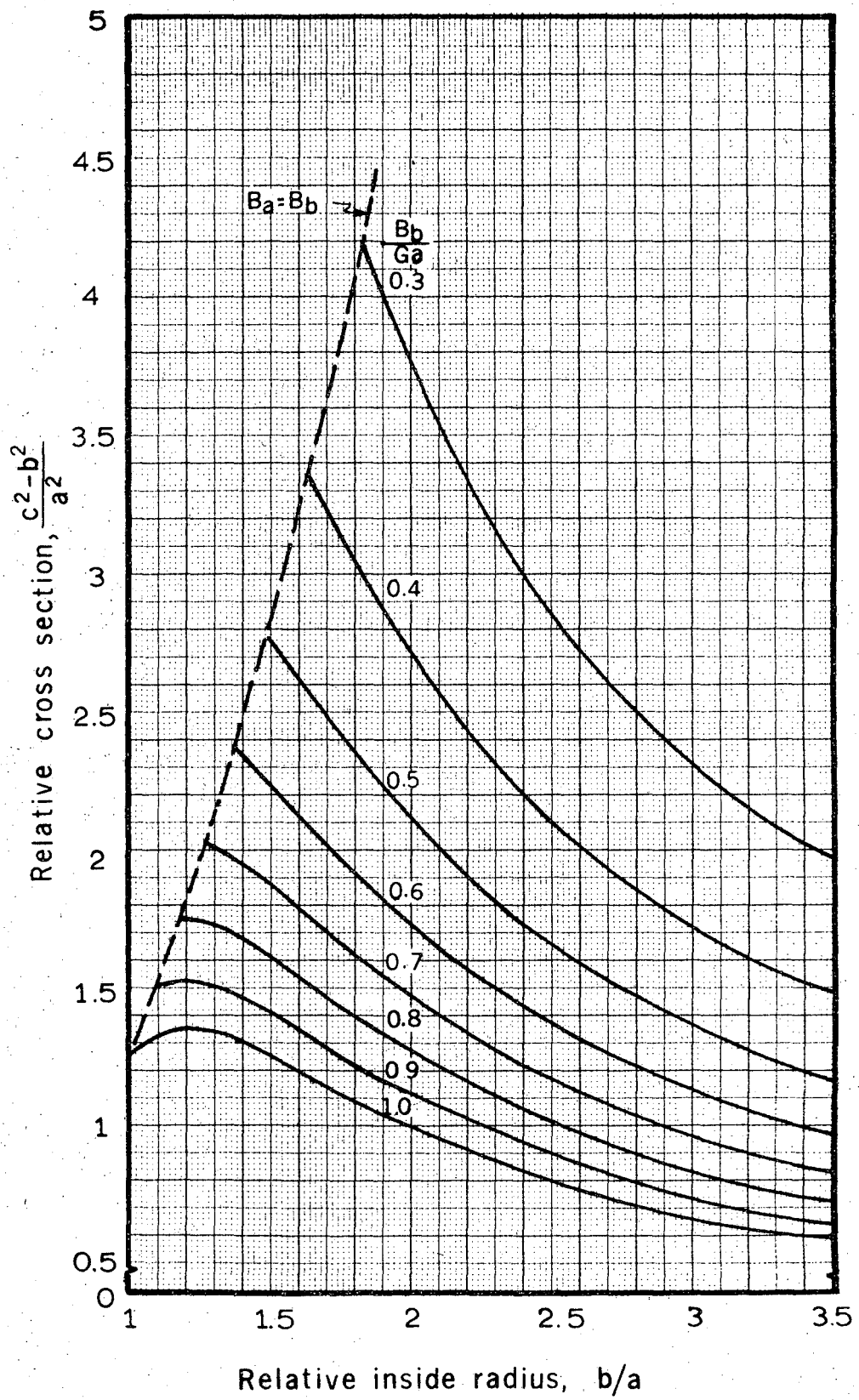

XBL 686-4880

Fig. 6. Shield cross section; quadrupole magnet.

To achieve this result we must shape the iron so as to make it saturate uniformly. The design of such shields is discussed later. A few computer runs based on a realistic B-H relationship were performed for shaped shields that fit closely around the winding so as to accentuate any possible field degradation due to saturation. In some cases the field uniformity was degraded less than 1/2% when the field in the iron was as high as 30 kG.

SHAPING THE SHIELD

For thin shields $[(c - b) \ll b]$ the thickness must vary sinusoidally to achieve a uniform flux density in the iron. For unsymmetrical configurations the sine curve is biased appropriately.

For thick shields the "thickness" of the shield is not defined in an obvious manner. (Do you measure the thickness perpendicular to the inner surface, or the outer?) We have adopted the following recipe for determining the outer boundary: For each of a family of points on the inside boundary, determine the total flux to be carried by the iron and the thickness of iron necessary to carry that flux. From the inner-boundary point strike an arc having that thickness for its radius. The outer boundary is the envelope of the family of arcs.

Unsymmetrical shields may be desirable to avoid interference with other apparatus. A part of all of the material in one leg may be shifted to the adjacent leg. This changes an "H"-type magnet to a "C"-type magnet, by analogy with conventional magnet terminology, and a conventional quadrupole to a "figure-of-eight"-type. By this process the thickness of the shield may be reduced to zero on one side of a bending magnet and on both sides of a quadrupole.

Some shields designed according to the above recipe are shown in Fig. 7. These are all designed for minimum overall size; that is, for $B_b = B_a$, so they are of course very thick.

The drafting process used to generate the shield shape is illustrated in Figs. 8(a) and 8(b). The process takes about 15 minutes.

If the shield is to be built up of burned or punched laminations, the curved outer boundary may be as practical a shape as any other. In other cases, however, it is probably more practical to approximate the outer boundary by shapes which are more compatible with available production processes. The shape does not have to be very precise.

For very large values of b/a, the shield has little influence on the field in the aperture, and almost any shape will do (a square box, for example).

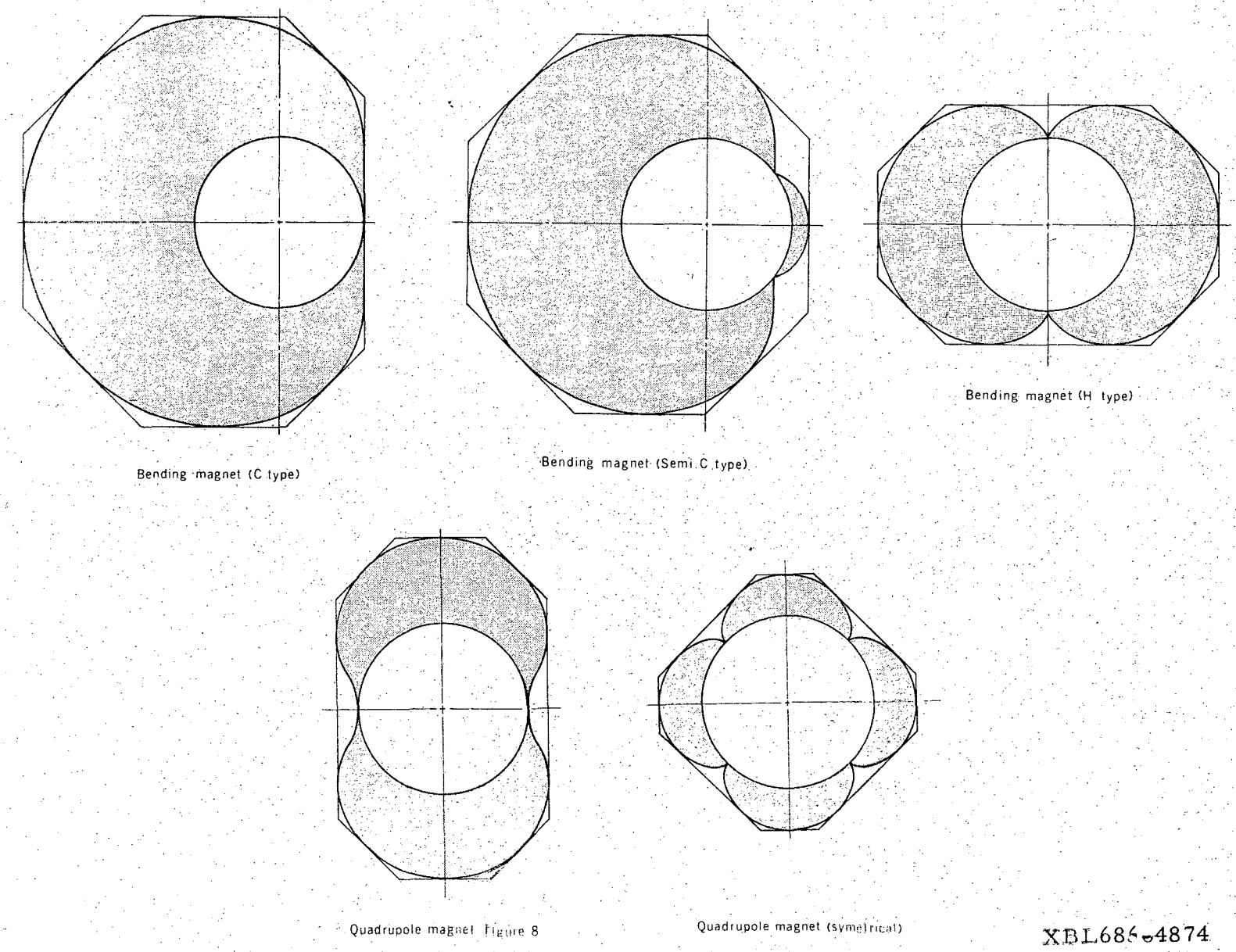

XBL686-4874

Fig. 7. Various shaped shields. All of these are designed for $B_a = B_b$, and therefore are relatively thick.

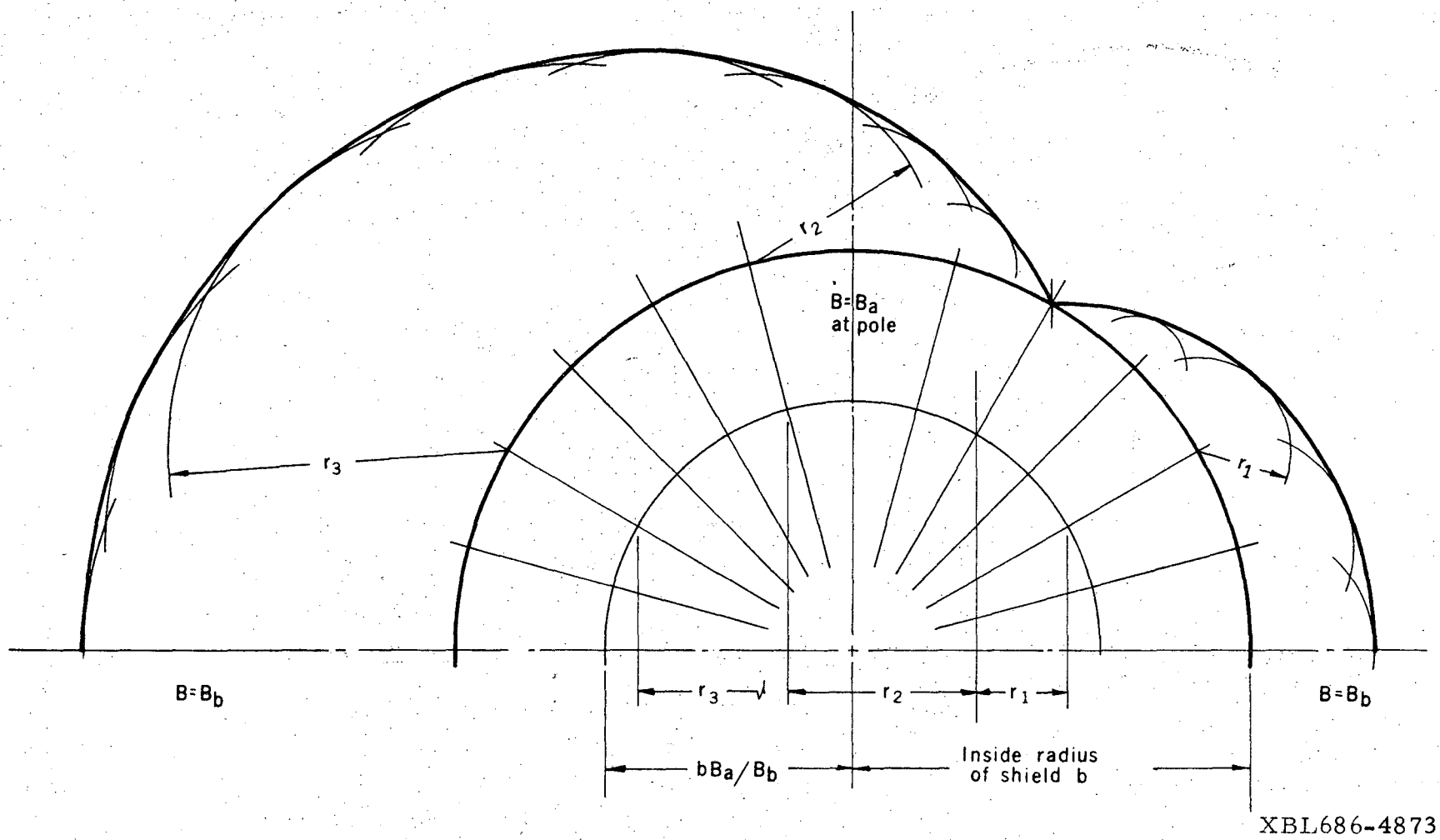

Fig. 8(a). Drafting procedure for designing shaped shields; bending magnets.

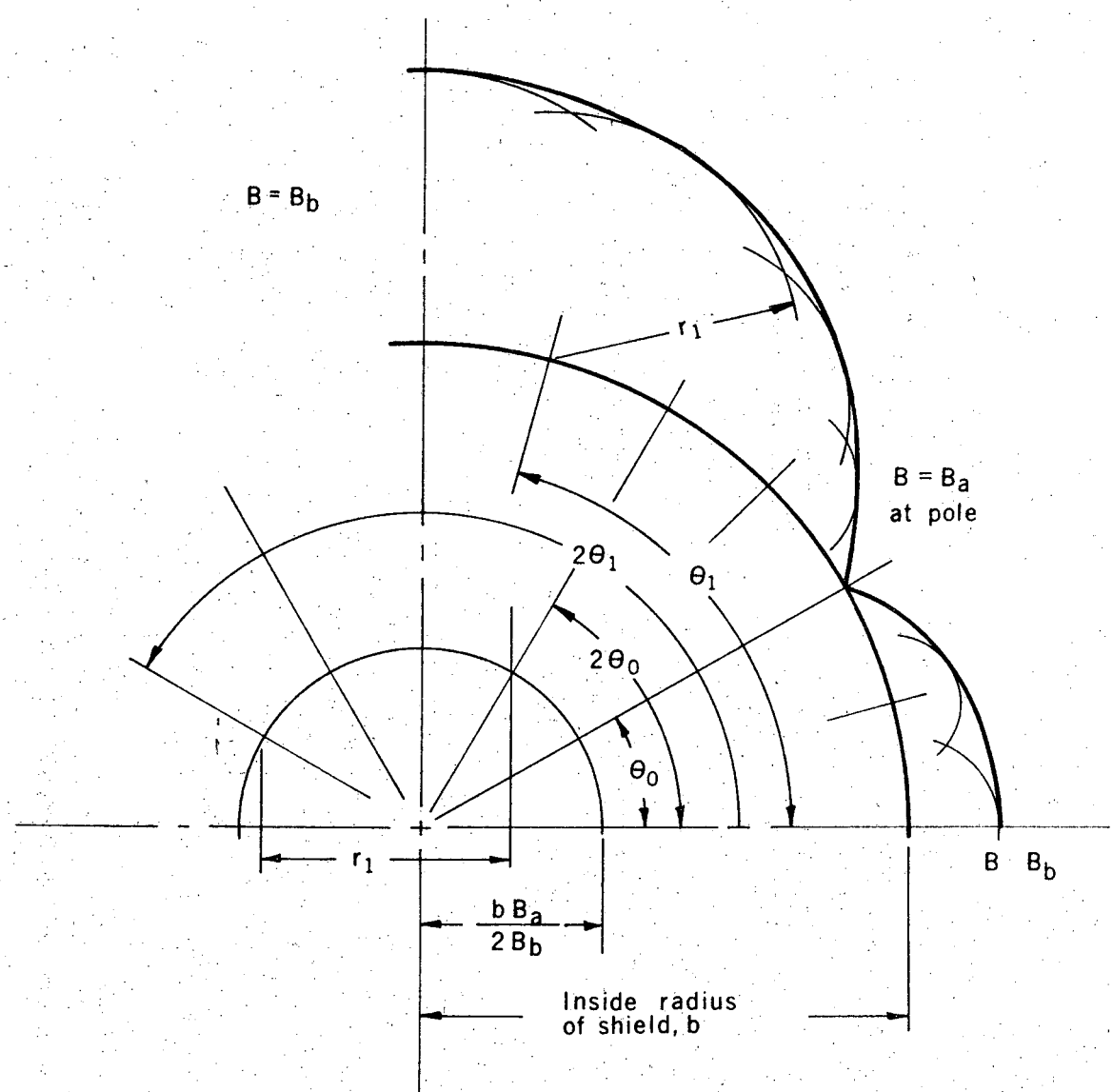

XBL 686-4872

Fig. 8(b). Drafting procedure for designing shaped shields; quadrupole magnets.

THICK WINDINGS

There are at least two configurations of thick windings which will produce pure bending or quadrupole fields if there is no iron present, and for which simple analytical solutions are available: a) Windings which are in effect comprised of successive thin layers in each of which the current has a cosine distribution, and b) Windings consisting of regions of uniform current density bounded by overlapping ellipses. These two configurations require very nearly the same ampere-turns and current density for the same field level and overall dimensions. The ampere turns required are also nearly the same as that required for a thin winding located at the average radius of the thick winding.

There are an infinite number of other winding configurations which will produce pure field shapes, but for which simple analytic solutions are not available. Then, too, there are available various step-wise approximations which do not give absolutely pure fields but which give good enough fields and are perhaps more easily constructed.

It seems logical to expect that any reasonable winding configuration will have virtually the same characteristics, and so for preliminary design purposes we may use whichever analytical solutions are most convenient without regard to what the actual configuration might be.

Of the infinite number of configurations which give pure fields in the absence of iron, only two are known to also give pure fields when iron shielded: a) thin winding with a cosine current distribution and b) a thick winding comprised of a succession of such thin layers. It seems logical to expect, however, that any reasonable configuration which in the absence of iron would produce a pure field would also produce a sufficiently pure field if a circular shield is added and thereby satisfy the criteria for wide-range operation outlined earlier.

NON-CIRCULAR WINDINGS

Particularly in the case of bending magnets, the required height of the aperture may be much smaller than the width, and one may realize some saving in superconductor by fitting the winding closely around the aperture. In principle, pure bending or quadrupole fields can be produced by a winding having any shape of cross section by distributing the current approriately. In particular, a thin winding of elliptical cross section, or a thick winding comprised of successive thin confocal elliptical windings may be used. If such a winding is surrounded by an iron shield the inner boundary of which is an ellipse which is confocal with the winding the field distribution in the aperture will be unaffected. The principles applied to circular windings in this report may also be applied to elliptical windings, and the results are qualitatively the same as those for circular windings.

EFFECT OF SHIELDING UPON PERFORMANCE

The effect of the iron upon the ampere-turn requirements, the stored energy, and the flux density at the iron surface are given by Equations 1 to 4 of Table I, and the effects are illustrated in Figs. 9(a) and 9(b). The iron-to-winding-radius ratio is taken as the independent variable, and the dependent variables are normalized to the aperture field strength. The graphs are self-explanatory.

Since the dependent variables are normalized against the aperture field in Figs. 9(a) and 9(b), the effect illustrated is that of adding iron shielding while holding B_0 or Ga constant, the current I being adjusted accordingly. One might ask, however, "What is the effect of adding an iron shield to a given winding?" and Figs. 10(a) and 10(b) are designed to illustrate that effect. The independent variable is B_0/B_a or Ga/B_a, which represents the maximum aperture field for the unshielded magnet in units of the maximum flux density in the iron, B_a, which may be thought of as the saturation induction. Two sets of curves are drawn: one for I = constant, representing a stability-limited winding, and the other for I proportional to the maximum aperture field, representing a winding whose current-vs-field characteristic parallels the short-sample characteristic. The dependent variable, $(B_0' - B_0)/B_a$ or $(G'a - Ga)/B_a$, represents the maximum amount by which the central field can be increased, in units of B_a, by the addition of a shield. Also shown in Figs. 10(a) and 10(b) are the corresponding values of the ratio of iron radius to winding radius, b/a.

The field of a dipole is increased by 10 kG, independent of the initial field, for $B_a = B_{sat} = 20$ kG, for the rather unrealistic condition that I is constant. For an initial field of say 40 kG, $B_0/B_a = 2$, and an I proportional to 1/B, the increase is only 5.3 kG: $[(B'/B_a) - (B/B_a = 0.265]$.

Except for magnets having very small initial fields, the field of quadrupoles is increased much less than dipoles by the addition of a shield. Again for a typical case, where the initial value of Ga is $2B_a$ or 40 kG, the field is increased by 6.3 kG and 3.3 kG for the cases I = constant and I proportional to 1/Ga.

EFFECT OF SHIELDING ON STRESSES

For an unshielded winding, the magnetic forces on the conductors are all tangential. The forces tend to make the winding change shape (a dipole tends to flatten, a quadrupole tends to become square), so a structure capable of resisting bending moments must be provided.

When shielding is added, the forces are no longer tangential; radial components are also present. It would seem as though the presence of the radial forces might greatly increase the bending moments. The structural problem has been analyzed and some of the results appear in Table II.

For the wide range of variable considered, the bending moments are increased by at most 10% when an iron shield is used. When the shield is close to the winding, the moments are actually reduced.

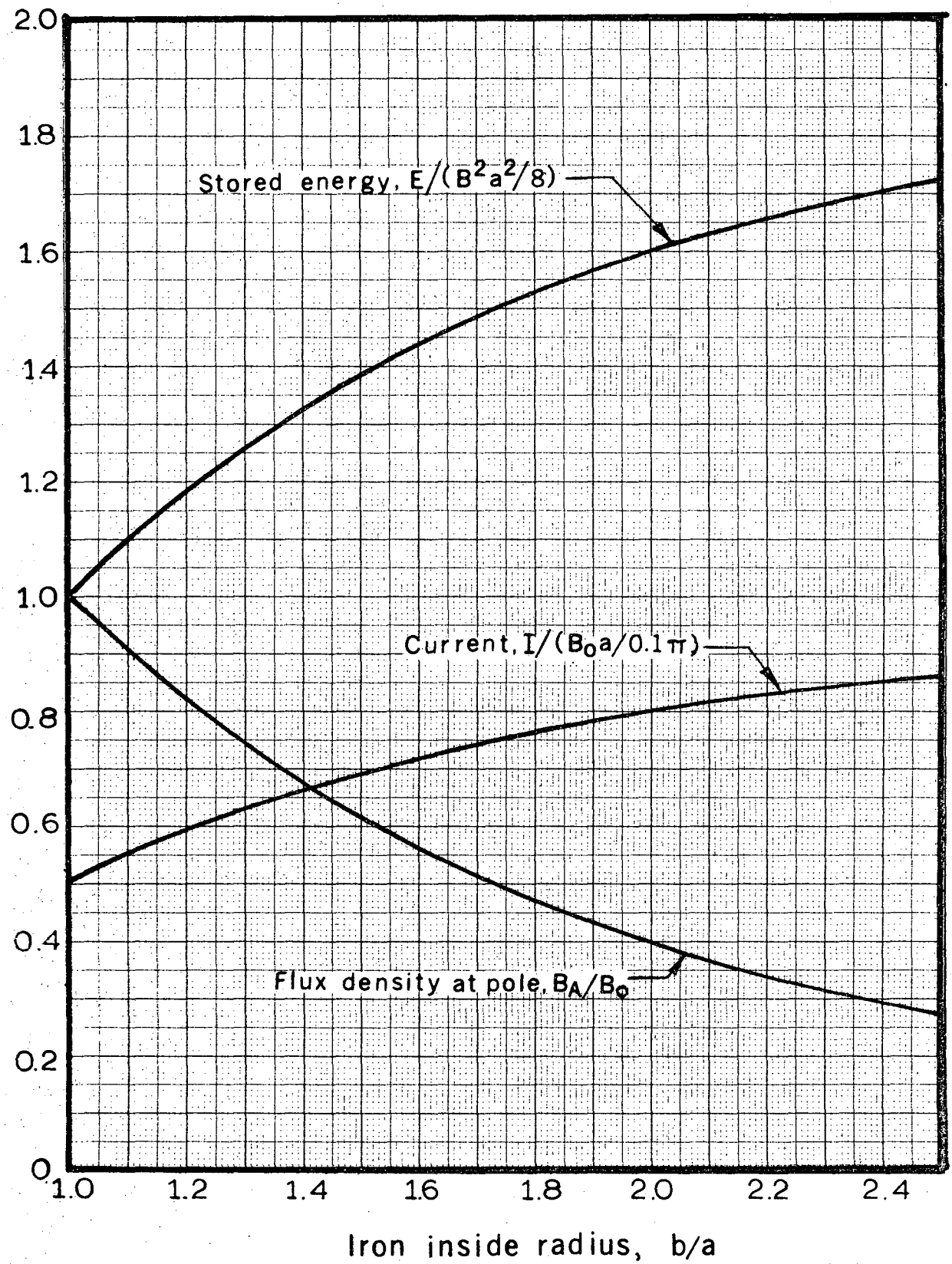

XBL686-4875

Fig. 9(a). Effect of a shield on magnet performance parameters; bending magnets.

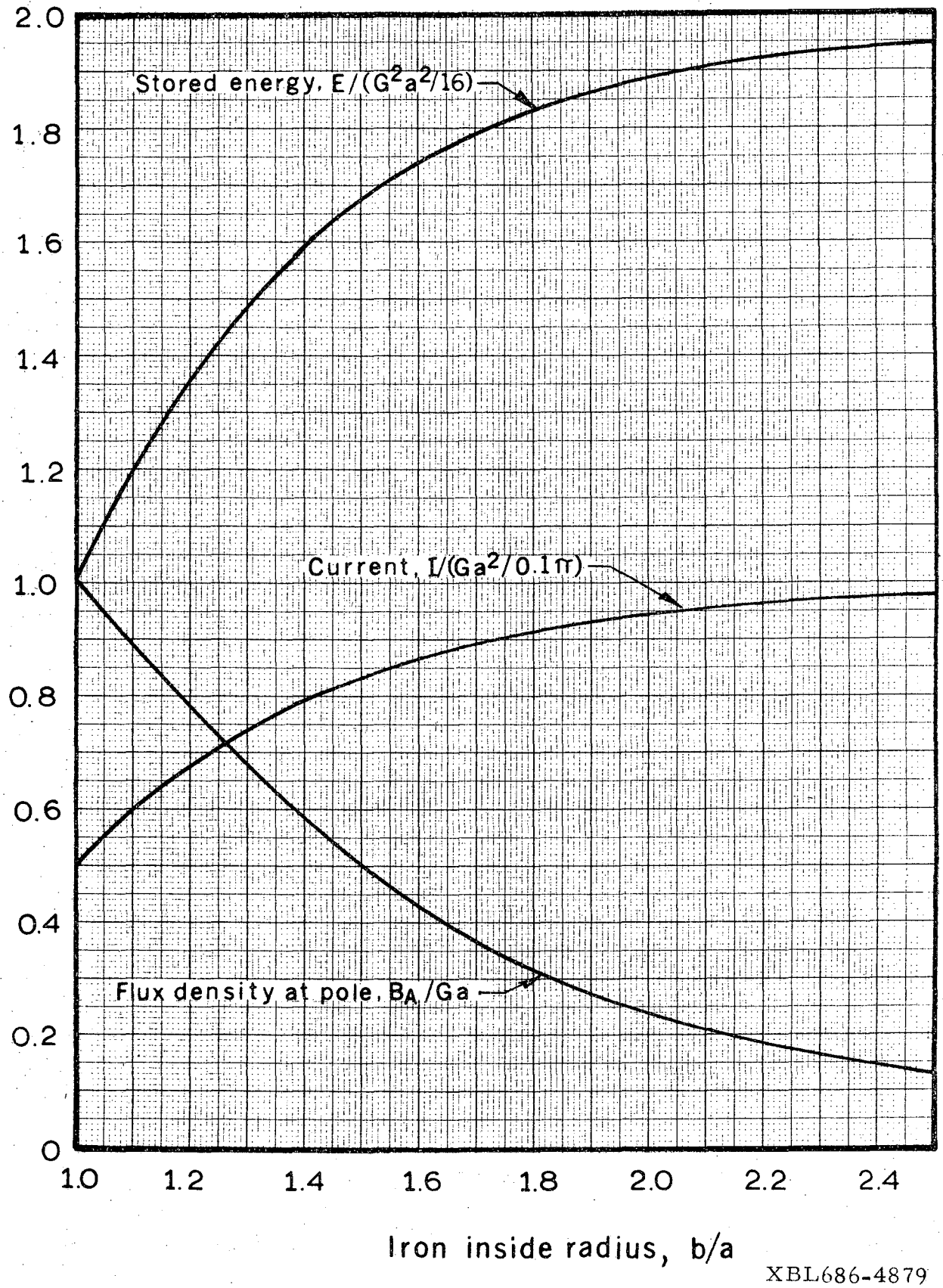

XBL686-4879

Fig. 9(b). Effect of a shield on magnet performance parameters; quadrupole magnets.

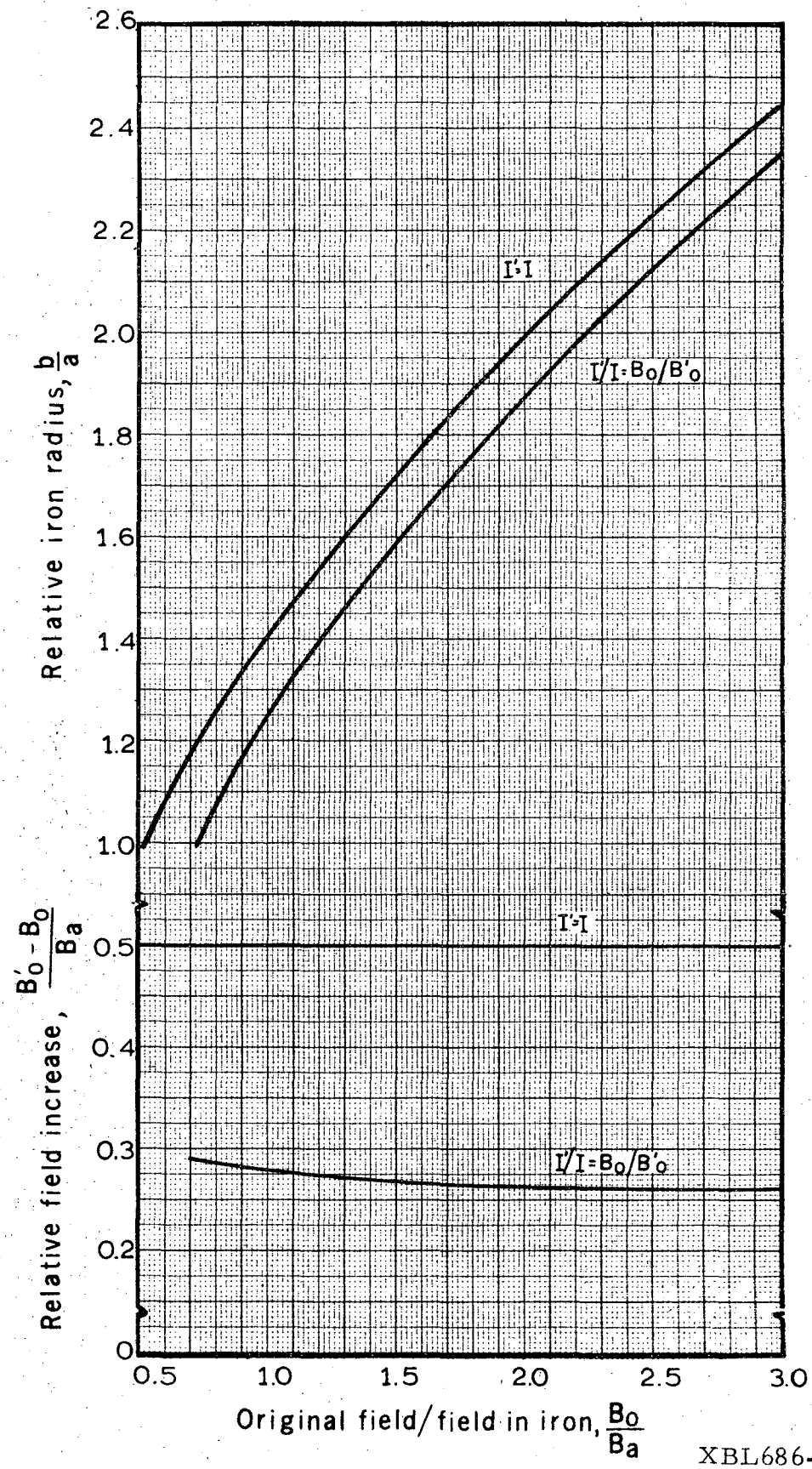

XBL686-4882

Fig. 10(a). Effect of adding a shield to a given winding; bending magnets.

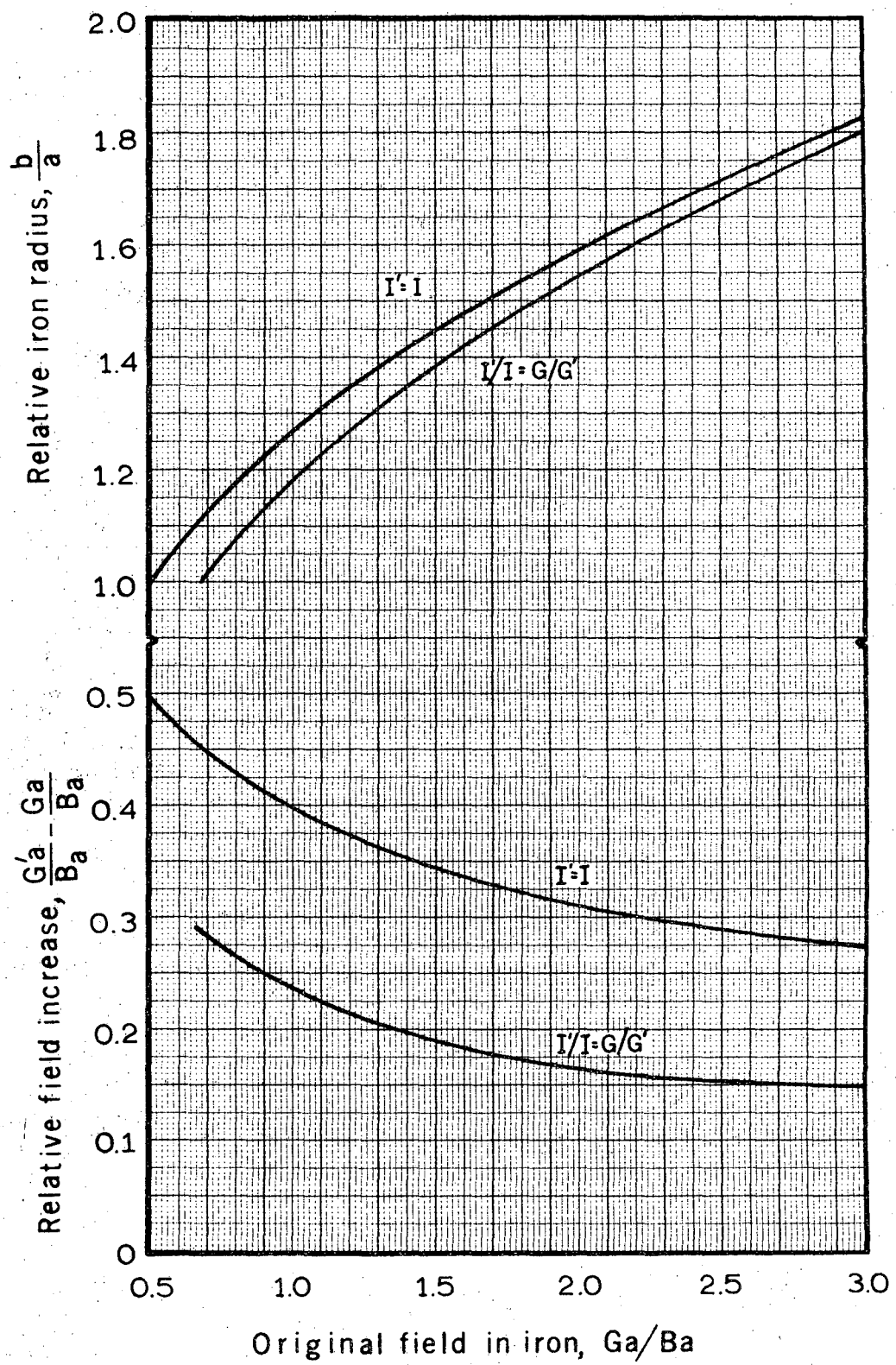

XBL 686-4881

Fig. 10(b). Effect of adding a shield to a given winding; quadrupole magnets.

Table II. Effect of magnetic shielding on stresses.

	Radius of inside of shield / Radius of winding	Relative maximum bending moment
Bending magnets	∞ [a]	1.000
	1.73 [b]	1.057
	1.00	0.909
Quadrupole magnets	∞	1.000
	1.49 [b]	1.125
	1.00	1.085

[a] Unshielded.

[b] Corresponds to B_a/B_0 or $B_a/Ga = 2.0$.

NOMENCLATURE

I	current or ampere-turns, A
I_ℓ	lineal current density, A/cm
E	total stored energy per unit length, J/cm
E_{in}	stored energy per unit length in aperture, J/cm
B	magnetic flux density, G
B_a	maximum B at inside surface of shield, G
B_b	B in shield midway between poles, G
a	radius of winding, cm
b	inside radius of shield, cm
c	outside radius of shield, cm
ϕ	total flux per unit length entering a half-pole, G cm
G	quadrupole gradient, G/cm
B_0	B in aperture of bending magnet, G

This report was prepared as an account of Government sponsored work. Neither the United States, nor the Commission, nor any person acting on behalf of the Commission:

A. Makes any warranty or representation, expressed or implied, with respect to the accuracy, completeness, or usefulness of the information contained in this report, or that the use of any information, apparatus, method, or process disclosed in this report may not infringe privately owned rights; or

B. Assumes any liabilities with respect to the use of, or for damages resulting from the use of any information, apparatus, method, or process disclosed in this report.

As used in the above, "person acting on behalf of the Commission" includes any employee or contractor of the Commission, or employee of such contractor, to the extent that such employee or contractor of the Commission, or employee of such contractor prepares, disseminates, or provides access to, any information pursuant to his employment or contract with the Commission, or his employment with such contractor.