UCRL-18410

cy. 2

RECEIVED
LAWRENCE
RADIATION LABORATORY

SEP 26 1968

LIBRARY AND
DOCUMENTS SECTION

University of California

Ernest O. Lawrence Radiation Laboratory

A LOW TEMPERATURE STAGE FOR THE PICKER THETA-THETA X-RAY DIFFRACTOMETER

Eckhard Nembach

August 1968

TWO-WEEK LOAN COPY

This is a Library Circulating Copy which may be borrowed for two weeks. For a personal retention copy, call Tech. Info. Division, Ext. 5545

UCRL-18410 cy. 2

DISCLAIMER

This document was prepared as an account of work sponsored by the United States Government. While this document is believed to contain correct information, neither the United States Government nor any agency thereof, nor the Regents of the University of California, nor any of their employees, makes any warranty, express or implied, or assumes any legal responsibility for the accuracy, completeness, or usefulness of any information, apparatus, product, or process disclosed, or represents that its use would not infringe privately owned rights. Reference herein to any specific commercial product, process, or service by its trade name, trademark, manufacturer, or otherwise, does not necessarily constitute or imply its endorsement, recommendation, or favoring by the United States Government or any agency thereof, or the Regents of the University of California. The views and opinions of authors expressed herein do not necessarily state or reflect those of the United States Government or any agency thereof or the Regents of the University of California.

UCRL-18410
UC-37 Instruments
TID-4500 (52nd Ed.)

UNIVERSITY OF CALIFORNIA

Lawrence Radiation Laboratory
Berkeley, California

AEC Contract No. W-7405-eng-48

A LOW TEMPERATURE STAGE FOR THE PICKER THETA-THETA X-RAY DIFFRACTOMETER

Eckhard Nembach

August 1968

A LOW TEMPERATURE STAGE FOR THE PICKER THETA - THETA X-RAY DIFFRACTOMETER

Eckhard Nembach

Inorganic Materials Research Division, Lawrence Radiation Laboratory,
University of California, Berkeley, California

ABSTRACT

A cold stage for the Picker Theta - Theta X-ray Diffractometer, Model 3488K, has been constructed to measure lattice constances of powder specimens at 91°K.

INTRODUCTION

During an investigation of the low temperature region of the Pb-In phase diagram[1] it became necessary to determine the crystal structures of the various phases by X-ray diffraction. The powdered specimens were quenched from the aging temperature in liquid nitrogen and their X-ray patterns taken at liquid nitrogen temperatures. The experimental arrangement for this is described in this report.

LOW TEMPERATURE STAGE FOR THE
PICKER THETA- THETA X-RAY DIFFRACTOMETER
Model 3488K, Series 199

An important feature of this diffractometer is that the X-ray tube and the counter rotate, whereas the specimen remains stationary, with its surface horizontal.

The cold stage is shown schematically in Fig. 1. The powder sample Sp is placed under a 6μ thick Mylar foil M1 in a disc-shaped cavity of the copper block B, which is attached to the copper rod R (diam. 32 mm). The lower end of this rod is placed in liquid nitrogen to cool the specimen by heat conduction. In order to prevent condensation of water and air on the specimen, it is enclosed in a vacuum chamber, consisting of the stainless steel tube T, the flange F, and the cover plate. The X-rays reach the specimen through a rectangular Mylar window M2(25μ thick, 16′X 25 mm^2). The chamber is evacuated to about 10^{-3} Torr by a mechanical pump. The temperature of the specimen is measured with a copper-constantan thermocouple which is clamped to the copper block B.

The cold stage is connected to the Picker diffractometer via brackets supporting the flange F. Because the copper rod R shrinks more than the steel tube T during the cooling process, the height of the specimen changes with temperature. Therefore the stage has to be aligned after it has cooled to liquid nitrogen temperature. The alignment is achieved by moving the whole stage vertically until an X-ray line of a standard specimen occurs at the correct Bragg angle. In order to get a good alignment it is advisable to use a line with a Bragg angle of not more than 15°. For precise work the liquid nitrogen level must be kept constant, otherwise the alignment might deteriorate. If the humidity of

the air is high it is necessary to blow dry air over the Mylar window M2 in the cover plate in order to prevent water from condensing on it.

EXPERIMENTAL PROCEDURE

During the investigation of the Pb-In phase diagram the powders were sealed in quartz tubes under 10 Torr helium, aged at temperatures between -30°C and +40°C, quenched in liquid nitrogen, and their X-ray patterns taken at 91°K. At this temperature diffusion is negligible and no phase changes occur. Therefore the structure of the alloy at the aging temperature is retained.

The experimental procedure was as follows. After being quenched in liquid nitrogen the quartz tubes with the specimens were enclosed in a heavy aluminium block, which was at liquid nigtrogen temperature , and then transferred into a helium filled dry box.

Inside this box the specimen holder B (Fig. 1) had been attached to a copper block, which was cooled from the outside by liquid nitrogen. (Fig. 2). The powdered specimen was placed in the disc-shaped cavity of the specimen holder, flattened with a knife, lightly sprayed with a colorless lacquer (Krylon Crystal Clear) and covered with a 6μ thick Mylar foil to hold it in place.

In the meantime the cold stage on the X-ray diffractometer had been evacuated and cooled with liquid nitrogen. Before breaking the vacuum for mounting the specimen, the liquid nitrogen was removed to prevent air from condensing in the space between the rod R and the steel tube T (Fig. 1). The small amount of water which condensed, during the handling of the specimen onto the Mylar foil M1 was wiped off with soft tissue, the cover plate replaced, the stage evacuated and recooled. Before evacuating it had been carefully checked that no liquid oxygen was in the vacuum chamber because otherwise the pump could have exploded. It has been proved that the specimens stayed cold enough during this pro-

cedure to prevent phase changes.

About 20 minutes after mounting a specimen on the cold stage the temperature stayed constant and the measurement could begin. The specimen temperature reached was $(91 \pm 4)^\circ K$; the deviations of $4^\circ K$ were probably caused by the varying tightness with which the copper block, containing the specimen, was screwed to the copper rod. In most cases it is not necessary to make corrections for this temperature deviation.

ACKNOWLEDGMENT

The author wishes to thank Mr. S. Evans for constructing the described cold stage.

This work was performed under the auspices of the United States Atomic Energy Commission.

REFERENCE

1. E. Nembach, The Low Temperature Region of the Lead-Indium Phase Diagram, UCRL-18284, June 1968, to be published in Trans. AIME.

FIGURE CAPTIONS

Figure 1: Cold Stage.

B copper block; R copper rod; T stainless steel tube; M1, M2 Mylar foils; P brass ring for clamping M1; F flange; Sp powder specimen; T.C. thermocouple

Figure 2: Preparing the Sample for X-ray Diffraction.

B copper block; C liquid nitrogen cooled copper block; P brass ring; M1 Mylar foil; Sp powder specimen

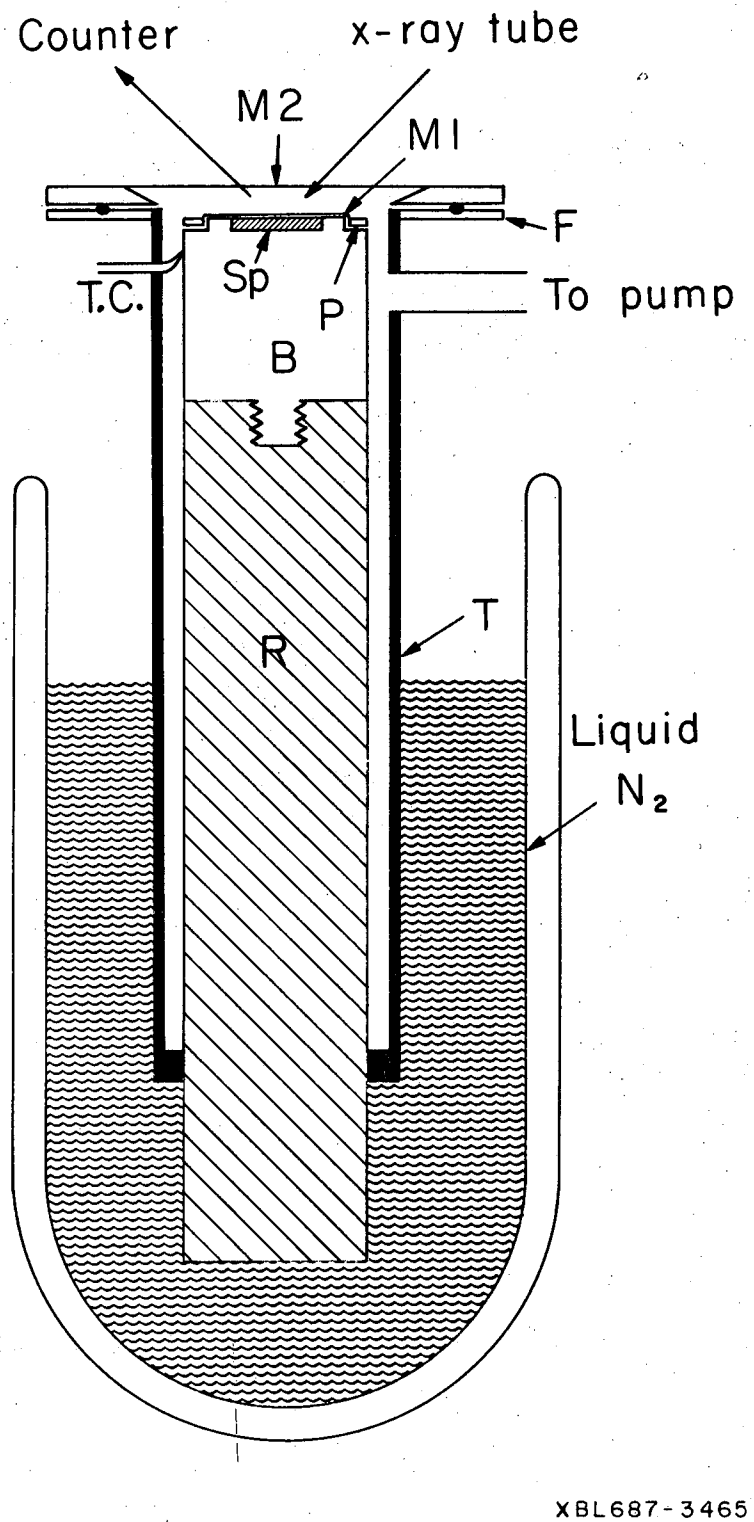
Counter
x-ray tube
M2
M1
F
T.C.
Sp
P
To pump
B
T
R
Liquid
N_2
XBL687-3465

Fig. 1

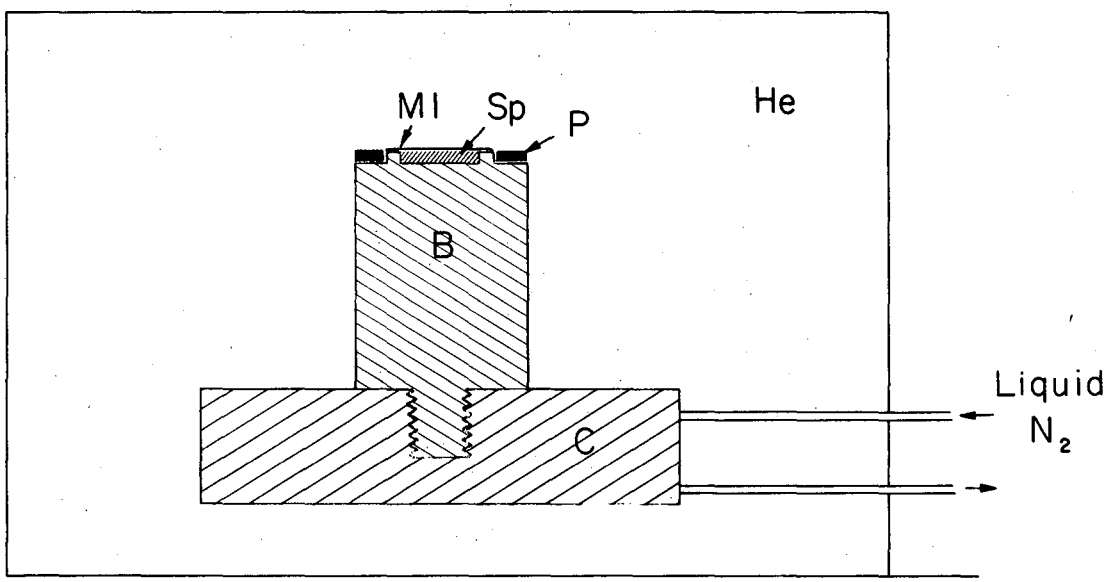

XBL687-3466

Fig. 2

This report was prepared as an account of Government sponsored work. Neither the United States, nor the Commission, nor any person acting on behalf of the Commission:

A. Makes any warranty or representation, expressed or implied, with respect to the accuracy, completeness, or usefulness of the information contained in this report, or that the use of any information, apparatus, method, or process disclosed in this report may not infringe privately owned rights; or

B. Assumes any liabilities with respect to the use of, or for damages resulting from the use of any information, apparatus, method, or process disclosed in this report.

As used in the above, "person acting on behalf of the Commission" includes any employee or contractor of the Commission, or employee of such contractor, to the extent that such employee or contractor of the Commission, or employee of such contractor prepares, disseminates, or provides access to, any information pursuant to his employment or contract with the Commission, or his employment with such contractor.