UCRL-18489
cy. 2

RECEIVED
LAWRENCE
RADIATION LABORATORY
APR 23 1969
LIBRARY AND
DOCUMENTS SECTION

APPLICATION OF THE TWO-POWER-SUPPLY METHOD TO THE FERRITE BIAS OF AN RF RESONATOR OF A RAPID-CYCLING SYNCHROTRON

Louis L. Reginato and Bob H. Smith

February 3, 1969

TWO-WEEK LOAN COPY

This is a Library Circulating Copy which may be borrowed for two weeks. For a personal retention copy, call Tech. Info. Division, Ext. 5545

LAWRENCE RADIATION LABORATORY
UNIVERSITY of CALIFORNIA BERKELEY

UCRL-18489
cy. 2

DISCLAIMER

This document was prepared as an account of work sponsored by the United States Government. While this document is believed to contain correct information, neither the United States Government nor any agency thereof, nor the Regents of the University of California, nor any of their employees, makes any warranty, express or implied, or assumes any legal responsibility for the accuracy, completeness, or usefulness of any information, apparatus, product, or process disclosed, or represents that its use would not infringe privately owned rights. Reference herein to any specific commercial product, process, or service by its trade name, trademark, manufacturer, or otherwise, does not necessarily constitute or imply its endorsement, recommendation, or favoring by the United States Government or any agency thereof, or the Regents of the University of California. The views and opinions of authors expressed herein do not necessarily state or reflect those of the United States Government or any agency thereof or the Regents of the University of California.

UCRL-18489
UC-28 Particle Accel.
High Volt. Mach.
TID-4500 (53rd Ed.)

UNIVERSITY OF CALIFORNIA

Lawrence Radiation Laboratory
Berkeley, California

AEC Contract No. W-7405-eng-48

APPLICATION OF THE TWO-POWER-SUPPLY METHOD TO THE FERRITE BIAS OF AN RF RESONATOR OF A RAPID-CYCLING SYNCHROTRON

Louis L. Reginato and Bob H. Smith

February 3, 1969

Printed in the United States of America
Available from
Clearinghouse for Federal Scientific and Technical Information
National Bureau of Standards, U. S. Department of Commerce
Springfield, Virginia 22151
Price: Printed Copy $3.00; Microfiche $0.65

APPLICATION OF THE TWO-POWER-SUPPLY METHOD TO THE FERRITE BIAS OF AN RF RESONATOR OF A RAPID-CYCLING SYNCHROTRON

Louis L. Reginato and Bob H. Smith

Lawrence Radiation Laboratory
University of California
Berkeley, California

February 3, 1969

Abstract

The ferrite bias equipment for the RF resonators of high-repetition-rate synchrotrons is expensive. This is a result of the high voltage necessary to overcome the back EMF of the unsaturated ferrite at the beginning of the sweep, and the high current necessary to saturate the ferrite at the end of the sweep. The high frequency resonators of the Omnitron, which sweep in 8 ms, require 70 V initially, but only 20 V after the first 2 ms, when the current reaches 5 kA. The voltage remains low for the remainder of the sweep, while the current increases to 20 kA. To meet these requirements as inexpensively as possible, a pulse-type power supply is used during the first 2 ms, and a high-current power supply through the remainder of the sweep. Smooth current transfer is an inherent property of the circuit. Inductance, which is surprisingly costly, is kept to a minimum by a "sandwich" bus bar technique. A silicon-controlled-rectifier (SCR) switch reverses the current every other sweep so that the full hystereses loop of the ferrite is used. A regulator circuit forces the bias current to follow a reference pulse.

Introduction

When both the particle energy gain and the repetition rate are high in a synchrotron, the problem of tuning the RF resonators becomes costly. The high energy gain implies a wide tuning range of the RF resonators, and this involves a wide range of permeability of the ferrite. The high repetition rate infers a high time rate of change of ferrite-bias current and a large amount of ferrite. The combination requires a high initial voltage and a high final current in the ferrite bias winding of the RF resonator. If a single power supply is used, such as those on the low rep-rate synchrotrons, the volt-ampere product becomes very high. For the Omnitron it would be 2 MVA per resonator.

By using a two-power-supply method, the size of this equipment can be reduced by more than a factor of 5. A high voltage low-current power supply is used during the "turn-on" period of the ferrite-bias current to efficiently match the initial high-voltage requirement, and then the resonator is transferred to a low-voltage, high current power supply to follow through the remainder of the sweep. The voltage and current requirements for the high-frequency resonator of the Omnitron are shown in Fig. 1, and the basic circuit is shown in Fig. 2. Figure 3 shows the physical arrangement of the equipment. This ferrite-bias system draws 75 kW of power at a power factor of 50% from the power line.

Power Supplies

The "turn-on" power supply is designed to provide 120 V at an average current of 400 A. It charges a 60 000-μF energy storage capacitor bank so that the load can draw a 2 000 A, 2-ms pulse of current. The "follow-through" power supply provides 30 V at 20 kA. The effective duty factor in normal synchrotron operation is about 20%, but the equipment was designed to operate CW for the RF test program so that studies could be made under static conditions. Final design would be restricted to pulsed conditions only, in order to reduce the size and cost of the equipment.

Initially, the Omnitron was designed to operate at a repetition rate of 60 pulses per second (pps). Because so many of the large loads of a synchrotron are inherently single phase, this choice of repetition-rate resulted in very poor utilization of the three-phase power equipment. Either a very large amount of energy storage must be provided or the three-phase line currents will be very poorly balanced. Our studies indicated that the unbalance would be about 50%. This can be avoided by reducing the repetition rate to 45 pps; at 60 pps the peak current loads the same phase of the three-phase power line for each pulse, whereas at 45 pps it drops back one phase for each pulse, so that it distributes the heating uniformly over all three phases. From a cost point of view, the unbalanced lines are not a trivial matter--the difference in equipment costs amounts to more than a half million dollars when all single-phase loads are considered.

All components in the power supplies are water-cooled in order to reduce their physical size.

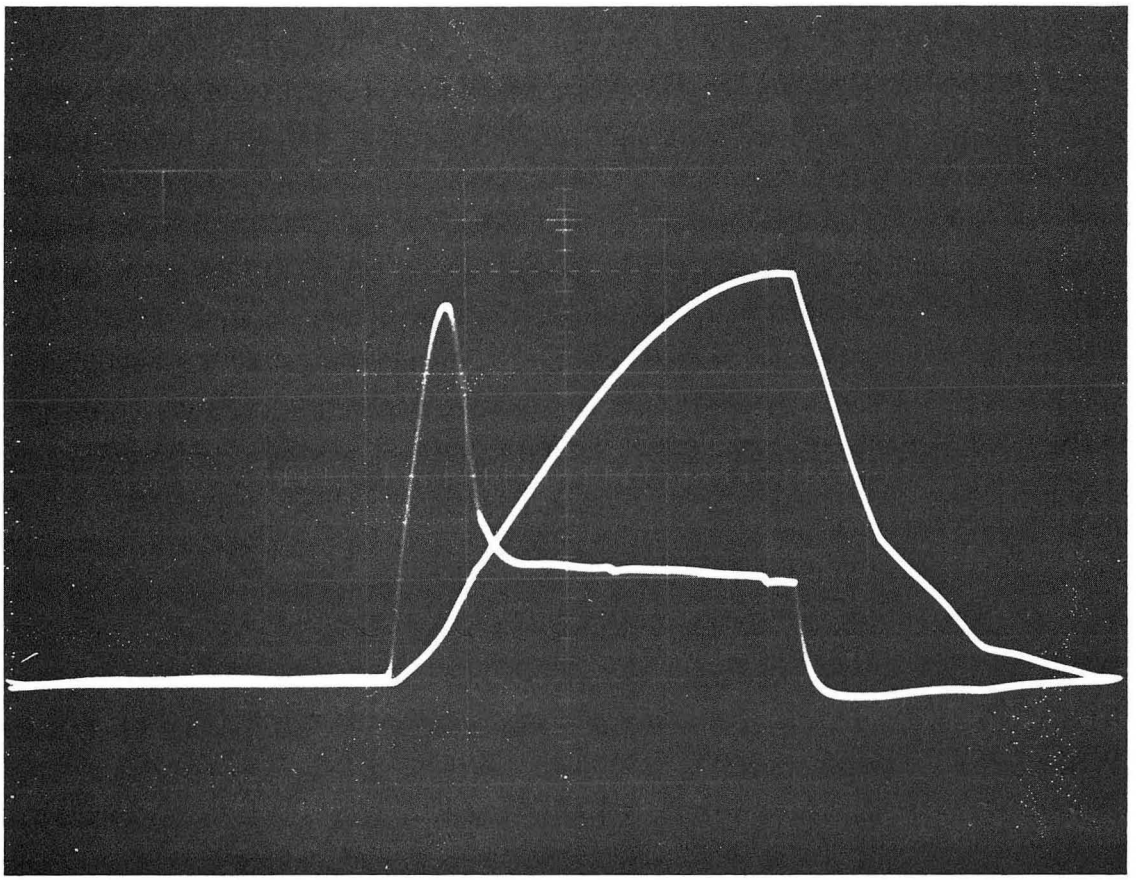

XBB 692-1253

Fig. 1. Voltage and current requirements of the ferrite-bias winding of a high-frequency resonator of the Omnitron. The scales are 20 V and 5 kA per division and 2 ms per division. At the beginning of the sweep, when the ferrite is unsaturated, the voltage is 75 V. This requirement is met by a pulse-type power supply. The remainder of the sweep is supplied by a low-voltage, high-current power supply. The transition occurs at about 2 ms. The final current is 20 kA.

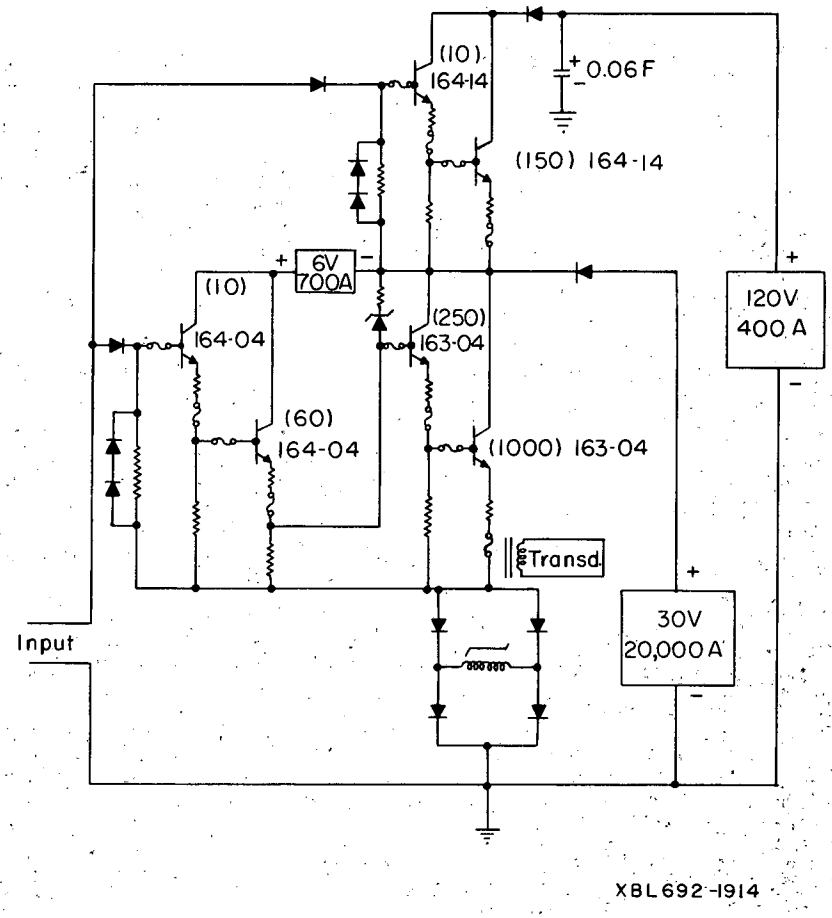

Fig. 2. Basic circuit of the ferrite-bias system. This circuit provided a smooth transition from the turn-on power supply to the high-current, follow-through power supply. The SCR switch reverses the direction of current flow through the ferrite bias winding each pulse, providing a complete transversal of the hysteresis loop of the ferrite and eliminating the need to reset the cores before each sweep.

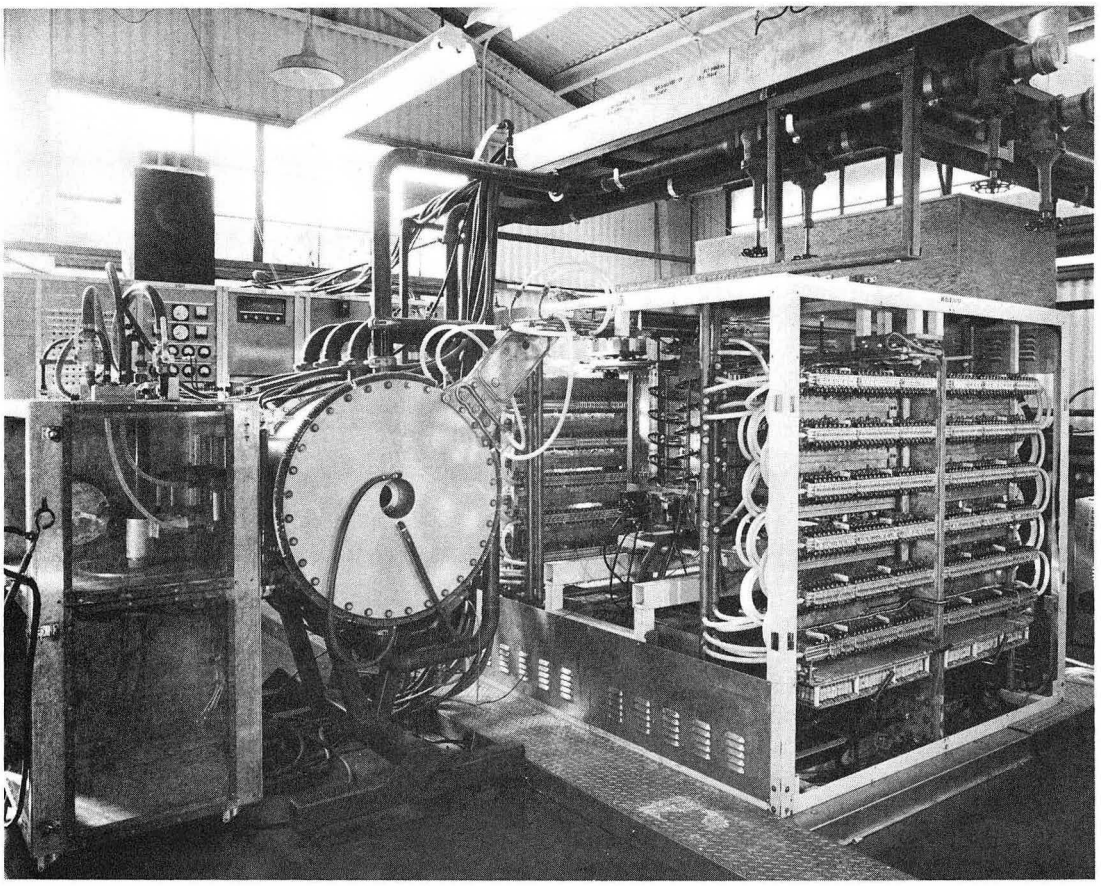

CBB 691-793

Fig. 3. Physical arrangement of the test RF station. The final amplifier uses an RCA type-6448 and is capable of delivering a peak power of 300 kW. The RF resonator contains forty-four 30-in.-diam ferrite disks and provides a peak RF gap voltage of 60 kV. It tunes from 7.3 to 34 MHz. The ferrite-bias supply provides up to 100 V and 20 kA of bias excitation. Both the final amplifier and the ferrite-bias supply require an average input power of 75 kW.

Transistor Banks

In order to provide the required tuning accuracy of the resonator, the bias current must be regulated to within a few tenths of a percent of a prescribed function. The required ferrite-bias winding voltage and current are shown in Fig. 1. The current from the two power supplies is controlled by two transistor-bank modulators as shown in Fig. 2. The transition between the two power supplies occurs at about 2 kA.

The transistor-bank modulators are the most costly component of the ferrite-bias system. A study of the available high-power transistors indicated that the Westinghouse 163-04 and 164-14 silicon transistors were the most economical units for this application. Mounted on a water-cooled heat sink, the transistors can dissipate more than 500 W at 20 A. One thousand 40-V (W163-04) transistors are used as the high-current modulators. The high-voltage, low-current modulator consists of 150 Westinghouse 164-14, which is a 140-V, high-gain version of the previous unit. The high-current bank is driven by a series of four emitter followers, which bring the drive requirement to 1.0 A. The low-voltage, high-current modulator is protected from overvoltage surges by a Zener clamp connected in the second emitter-follower stage. Base and emitter fuses are included with each transistor, so that a failing transistor automatically removes itself from the circuit. An emitter resistor ensures sharing of current between transistors. The major problem in a transistor regulator for 20 kA is the physical arrangement of the very large number of transistors so that stray inductance can be kept to a minimum.

With a maximum current-changing rate of 3 A/μs, there is a loss of power-supply voltage of 3 V per microhenry of inductance. Fortunately the high rate of change of current occurs at the beginning of the sweep, when the high-voltage power supply is operating, so that the loss of voltage is not as serious as it would be if it had occurred during the operation of the low-voltage power supply.

By using a sandwich construction in both the bus bars and the transistor heat sinks, the system leakage inductance was held to only 6.6 μH. Parasitic oscillations of the transistor banks were suppressed by means of capacitors connected between the base and collector busses.

The SCR Switch

In order to reverse the current through the resonator so that the full ferrite hysteresis loop would be traversed, silicon-controlled rectifier (SCR) switch was used. The current is reversed by firing alternate legs of the bridge every other cycle. Each leg of the bridge consists of 20 Westinghouse 229D SCR's. Our tests showed that these units can carry over 3 kA of peak current at 60 Hz. However, we use 1 000 A as the design value. The SCR's were matched to be within 50 mV voltage drop at rated current. Unfortunately, however, even though they were matched, current sharing was not achieved. A thermal runaway condition occurs in which the SCR with the lowest voltage drop captures more of the current and increases in temperature. This reduces its voltage drop further, and increases its share of the current, and failure soon occurs. Series water-cooled manganin 1/4-mΩ resistors were installed to improve current sharing between the SCR's.

Unfortunately, by itself this did not cure the problem. The SCR gating pulse length was 1.5 ms. By the end of this pulse, the current through the switch was still quite low so that the voltage drop across the SCR's was not sufficient to permit all of them to conduct. With only a fraction of the SCR's conducting the current per unit was excessive and failure occurred. We decided that a firing pulse for the duration of the cycle is necessary. An RF firing system operating at 25-kHz was installed. This solved the problem and we have had no more SCR failures.

Transductor

In order to obtain a reliable reading of output current, we designed a 20-kA, 4-core, transductor which gives a signal of 1V/kA. Since the current through the transductor must always flow in the same direction, it was located ahead of the SCR switch. The transductor response is uniform from dc to over greater than 100 kHz, which makes it ideal as a signal source for the regulator.

Regulator Amplifier

The resonator current must follow closely a reference voltage which keeps the resonator tuned to the RF. The ferrite-bias system is connected in a feedback regulator circuit. The regulator amplifier provides drive to the output transistor banks and also the frequency compensation for the feedback system. There are two time constants inherent in the equipment. One is associated with the transistor bank, and the other with the inductive load. It proved convenient to make the latter the dominant time constant of the system, while the former is compensated by providing a zero in the regulator amplifier. The loop gain is about 1 000 with the open loop pole at 25 Hz and unity gain at 25 kHz.

Conclusion

The two-power-supply method is an economical solution to the ferrite-bias problem of the large RF resonators used in rapid-cycling synchrotrons. The resonator which was used in this study was designed for the high-frequency RF system of the Omnitron. It uses forty-four 30-in.-diam by 1/2-in.-thick ferrite disks and is capable of providing an RF gap voltage of 60 kV. It tunes from 7.3 to 34 MHz. The cubicle style of construction which was used is convenient for the RF test station, but for the final design we would recommend matching the style of construction to the space available within the synchrotron tunnel.

For this study, four transformers and rectifiers were used. They were connected in a series-parallel arrangement for pulsed operation, and in parallel for dc operation. We do not feel that the dc capability is necessary in an operating machine, and it does increase the cost of the ferrite-bias system. A single transformer and rectifier would be satisfactory.

Acknowledgment

This work was done under the auspices of the U. S. Atomic Energy Commission.

LEGAL NOTICE

This report was prepared as an account of Government sponsored work. Neither the United States, nor the Commission, nor any person acting on behalf of the Commission:

A. Makes any warranty or representation, expressed or implied, with respect to the accuracy, completeness, or usefulness of the information contained in this report, or that the use of any information, apparatus, method, or process disclosed in this report may not infringe privately owned rights; or

B. Assumes any liabilities with respect to the use of, or for damages resulting from the use of any information, apparatus, method, or process disclosed in this report.

As used in the above, "person acting on behalf of the Commission" includes any employee or contractor of the Commission, or employee of such contractor, to the extent that such employee or contractor of the Commission, or employee of such contractor prepares, disseminates, or provides access to, any information pursuant to his employment or contract with the Commission, or his employment with such contractor.

TECHNICAL INFORMATION DIVISION
LAWRENCE RADIATION LABORATORY
UNIVERSITY OF CALIFORNIA
BERKELEY, CALIFORNIA 94720