UCRL-18528 Rev.

Cy. 2

MAR 27 1989

LIBRARY AND
DOCUMENTS SECTION

TWO-WEEK LOAN COPY

This is a Library Circulating Copy which may be borrowed for two weeks. For a personal retention copy, call Tech. Info. Division, Ext. 5545

THE COBWEB DATA REDUCTION SYSTEM

Herbert C. Albrecht, Eugene P. Binnall, Robert W. Birge,
Myron H. Myers, and P. Wes Weber

October 21, 1968

UCRL-18528 Rev.
Cy. 2

LAWRENCE RADIATION LABORATORY
UNIVERSITY of CALIFORNIA BERKELEY

DISCLAIMER

This document was prepared as an account of work sponsored by the United States Government. While this document is believed to contain correct information, neither the United States Government nor any agency thereof, nor the Regents of the University of California, nor any of their employees, makes any warranty, express or implied, or assumes any legal responsibility for the accuracy, completeness, or usefulness of any information, apparatus, product, or process disclosed, or represents that its use would not infringe privately owned rights. Reference herein to any specific commercial product, process, or service by its trade name, trademark, manufacturer, or otherwise, does not necessarily constitute or imply its endorsement, recommendation, or favoring by the United States Government or any agency thereof, or the Regents of the University of California. The views and opinions of authors expressed herein do not necessarily state or reflect those of the United States Government or any agency thereof or the Regents of the University of California.

UCRL-18528 Rev.
UC 34 Physics
TID-4500 (52nd Ed.)

UNIVERSITY OF CALIFORNIA

Lawrence Radiation Laboratory
Berkeley, California

AEC Contract No. W-7405-eng-48

THE COBWEB DATA REDUCTION SYSTEM

Herbert C. Albrecht, Eugene P. Binnall, Robert W. Birge,
Myron H. Myers, and P. Wes Weber

October 21, 1968

Printed in the United States of America
Available from
Clearinghouse for Federal Scientific and Technical Information
National Bureau of Standards, U. S. Department of Commerce
Springfield, Virginia 22151
Price: Printed Copy $3.00; Microfiche $0.65

Contents

Abstract vii

I. Introduction 1

II. General Description

A. System Organization 3

B. System Management

1. Objectives 3

2. Activities 5

C. System Operation

1. Scanning Operation

a. General Procedure 7

b. Detailed Procedures

(1) Sign-on procedure 9

(2) Scanning procedure 9

(3) Additional computer messages 11

(4) Sign-off procedure 12

2. Measuring

a. General Considerations 12

b. Detailed Procedures

(1) Sign-on procedure 13

(2) Fiducial measurement 16

(3) Track measurement 17

(4) Teletyped communications 19

(5) Control button 21

3. Computer Operations 22

III. System Configuration

A. Cobweb Hardware 23

B. Computer Hardware 23

IV. Cobweb Hardware Description

A. Interface 26

B. Data Transmission

1. To Measuring Machines from Computer 27

a. Servo register format 28

b. Teletype register format 29

c. Display register format 30
d. Miscellaneous register format 31
e. Film-move register format 32
2. From Measuring Machines to Computer 33
a. Stage-servo category 36
b. Push-button category 36
c. Feed-back category 38
d. Teletype category 39
e. Interlock category 39
3. Special Features
a. Alarm systems 39
b. Automatic recording 40
c. Pulse height 40
C. Scan-Table Teletype Interface 41
V. Software Description
A. Control-Point Concept. 43
B. Procedure Switching 43
C. Manual Intervention 44
D. Initialization 44
E. Termination 44
F. Cobweb Interface 44
G. Standard Computer Peripherals 45
H. Scan-Table System Logic
1. Input 45
2. Teletype Procedure
a. Sign-on 45
b. Scan report 46
c. Sign-off 46
3. Format Checking 46
4. Output and Scanner's Rejection 46
5. Storage Allocation 47
6. Reentrant Rules 47
I. Measuring System
1. Data Flow
a. Machine to computer 47

b. Computer to machine 48
2. Input
a. Scan cards 48
b. Adjustable constants 48
3. Output 48
J. Peripheral Programs
1. BANG 49
2. Adjustable Constants. 49
3. COBVAL 49
4. COBEDIT 50
VI. Physics Checks 51
A. Track 51
B. Vertex 51
VII. Future Plans
A. Program Development 52
1. Executive Control Points 52
2. Track Matching 52
3. Disk 52
B. Hardware: Disk Interface 52
VIII. Conclusion 53
Acknowledgments 54
References 55
Appendix A. Operating Procedure for the Cobweb Measuring Program 56
Appendix B. Cobweb Adjustable Constants 62
Appendix C. 7044 Data Output Tape 70
Appendix D. Cobweb Log Tape 74

THE COBWEB DATA REDUCTION SYSTEM*

Herbert C. Albrecht, Eugene P. Binnall, Robert W. Birge,
Myron H. Myers, and P. Wes Weber

Lawrence Radiation Laboratory
University of California
Berkeley, California

October 21, 1968

ABSTRACT

Cobweb is a computer-controlled data reduction system which consists of an IBM 7044 computer, a time-sharing program, two LRL-built electronic interfaces, improved automatic-tracking Franckenstein-type measuring machines, and scan tables with teletypes. The purpose of the system is to acquire data on-line in a rapid, reliable fashion from the scanning and measuring of bubble chamber film. The editing of data is done off-line on a CDC 6600 computer. The result is a large gain in measuring rate with few errors.

I. INTRODUCTION

Cobweb is an on-line computer-controlled data-analysis system designed to improve and increase[1] the measuring rate of conventional track-following Franckensteins[2] and also to include checks on the output from scan tables.[3] The performance of our measuring machines in the past usually averaged from three to eight events per hour depending on the event types to be measured, with errors ranging from 5 to 25%. The errors were caused by improper measuring procedure, faulty digitizers, card-punch malfunction, and various other sorts of problems. With these same machines on-line to an IBM 7044, the performance has increased to rates from 10 to 50 events per hour, again depending on the event type, with a long-term average of 20 events/hour for a random sample. Along with this improved rate the errors now vary from 1% (two-prong events) to 5%(four-prong events) due mainly to operators' interchanging the order of measurement of tracks in the various views. A track match program is planned to eliminate this remaining problem.

For the Powell-Birge research group the 50 000 events measured each year on two Franckensteins constituted about 20% of the total sample that was being studied by the group. The bulk of the measurements (200 000 events/year) are measured on the FSD, a machine shared with two other research groups. Thus the events under discussion constitute remeasurements of FSD failures, plus event-types handled poorly by the FSD, such as short proton tracks, sigmas, 0-prong + vee, etc. Indeed, the increased measurement capacity of the FSD plus the dwindling of manpower available for measurement purposes forced us to speed up the conventional machines just to keep up with the remeasurings. It appeared more economical to speed up the present machines rather than to build additional machines and hire more people.[4] The improved rate of measurement has justified this point of view.

Cost estimates for the project were made in March 1966 and the accounts were opened in April 1966. A first logic flow chart was ready in August, along with much of the electronic design. The racks to hold the electronic equipment arrived in January 1967, and the hardware was operating by May 1967. In June 1967, a digitized microscope was put into operation 8 hours per day on-line as a test of the system. Then four Franckensteins were gradually added, two for the Powell-Birge group and two for the Trilling-Goldhaber group, in August and October 1967 and in March and June 1968. One more machine for the Trilling-Goldhaber group is still to be added. The scan-table teletypes went into operation in October 1968.

On the measuring machines our philosophy has been to eliminate the hand setting of all fixed data, to have the computer drive the stage whenever possible, and to make the minimum number of checks necessary to insure that the data are as accurate as possible. Additionally the operator does not carry on a conversation with the computer, but needs only to type in his initials when starting a shift and again when

finishing. The computer types out the event identification from scan cards previously read into memory, and also lists errors and corrective procedures as the measurement progresses. The operator can push reset buttons, a track record button, and a track complete button.

The computer knows the approximate position of all fiducials to be measured and drives the stage to them consecutively, checking their exact spacing in each view. It then drives the stage to the vicinity of the first vertex as determined according to "grids" listed by the scanner on the scan cards. The operator measures each track in a single view, the computer driving the stage back to the vertex after each track is complete. A curve is fitted separately to each track in each view to check the accuracy of measurement.

The vertex point is taken only once in each view, but that point is used in the fit for all tracks from that vertex. If the track does not pass the curve-fitting check the operator must remeasure the vertex to test operation of the scalers that determine its position.

Additionally a check is made in each of the three views to see that the vertex point corresponds in all three views.

Constants related to individual experiments, and to bubble chambers and to measuring machines are put on an Adjustable Constants tape, which is read by the computer as needed.

II. GENERAL DESCRIPTION

A. System Organization

The purpose of the Cobweb system is to acquire data, and to both control and check by computer those portions of the scanning and measuring tasks which result in operator fatigue and sometimes in operator error, in order to free the operator to make judgments about those tasks that can be performed only by him. The system was also designed to ensure very rapid, real-time, accurate, and reliable data flow from bubble chamber film to reconstruction programs.

Figure 1 illustrates the flow of data through the Cobweb system. The activity on the IBM 7044 computer is in real time, whereas those functions carried out on the CDC 6600 are off-line operations.

The system is designed to handle single- or multiple-roll 46-mm, 35-mm, or 70-mm bubble chamber film. It is possible also to process spark chamber film.

The system is programmed to edit Cobweb measurement output into any format necessary for use in current three-view reconstruction programs (TVGP, FOG, etc.).

The weekly log tape contains information about such items as events, various reset buttons pushed, who measured what and when, and error and maintenance data. A program called SCORE abstracts information from the log tape, enabling one person to supervise the performance of operators around the clock. It audits machine utilization and rates of measurement by event type on each machine for each person as well as for the group as a whole. This facility also allows the operators to have more time to work as they need not fill out a log book or time sheet.

Punched scan-card input to the Cobweb system was chosen over magnetic tape input for two main reasons: event types and experiments can be physically separated from one another easily when changes are desired, and, most importantly, cards are permanent and readily correctable if in error.

B. System Management

1. Objectives

Systems of the size and nature of Cobweb, especially with more than one physics group being serviced, need a well-structured organization of the people involved in its design, maintenance, and operation. This structure is necessary in order to provide an efficient, coordinated operation for 24 hours a day, 7 days a week. The organization was designed to ensure communication and encourage constructive

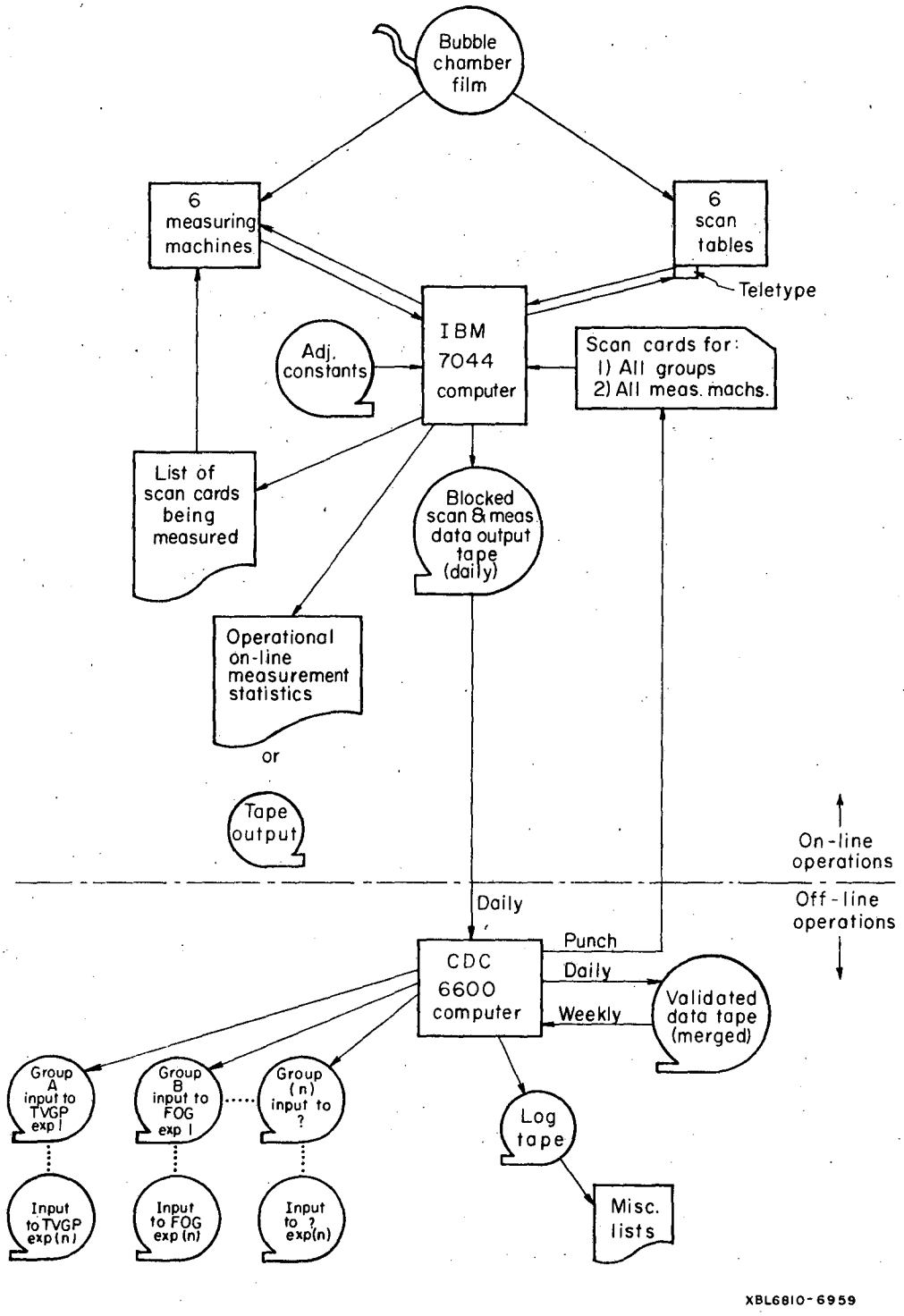

Fig. 1. Cobweb data flow.

feedback as well as to define areas of responsibility and decision making (see Fig. 2).

2. Activities

Director

Ultimate responsibility in all areas of development and production, especially future planning, liaison between physicists in users' groups, generating physics-type input to overall system (like how and what physics should be done within system program, etc.).

Participating Group Physicists

Generate needs that require service.

System Programmers

Develop and write all programs pertaining in any way to the total system. Has authority over the computer operations area of responsibility so as to ensure rapid and intelligible feedback of problems relating to system programming. Has a close working relationship with System Management and Engineering.

System Manager and Production Coordinator

Responsible for the coordination of all activities that relate to the system. Ensures that the system is organized and maintained in such a manner as to permit rapid and efficient flow of production data from the film to production computer output. Has a close working relationship with programming and engineering personnel and works to guarantee good communication between all parts of the system organization.

Hardware Engineer

Working in close contact with system programming and management, is responsible for the development of all peripheral on-line equipment.

Computer Operators

Are responsible for the continuing operation of the 7044 computer and its peripheral equipment. Ensure that the 7044 system scheduling and maintenance are up to date. Have a very close working relationship with system production operators so as to be informed of computer- and program-oriented difficulties. Ensure that computer center operations supervisors respond promptly and correctly to any system failures.

feedback as well as to define areas of responsibility and decision making (see Fig. 2).

2. Activities

Director

Ultimate responsibility in all areas of development and production, especially future planning, liaison between physicists in users' groups, generating physics-type input to overall system (like how and what physics should be done within system program, etc.).

Participating Group Physicists

Generate needs that require service.

System Programmers

Develop and write all programs pertaining in any way to the total system. Has authority over the computer operations area of responsibility so as to ensure rapid and intelligible feedback of problems relating to system programming. Has a close working relationship with System Management and Engineering.

System Manager and Production Coordinator

Responsible for the coordination of all activities that relate to the system. Ensures that the system is organized and maintained in such a manner as to permit rapid and efficient flow of production data from the film to production computer output. Has a close working relationship with programming and engineering personnel and works to guarantee good communication between all parts of the system organization.

Hardware Engineer

Working in close contact with system programming and management, is responsible for the development of all peripheral on-line equipment.

Computer Operators

Are responsible for the continuing operation of the 7044 computer and its peripheral equipment. Ensure that the 7044 system scheduling and maintenance are up to date. Have a very close working relationship with system production operators so as to be informed of computer- and program-oriented difficulties. Ensure that computer center operations supervisors respond promptly and correctly to any system failures.

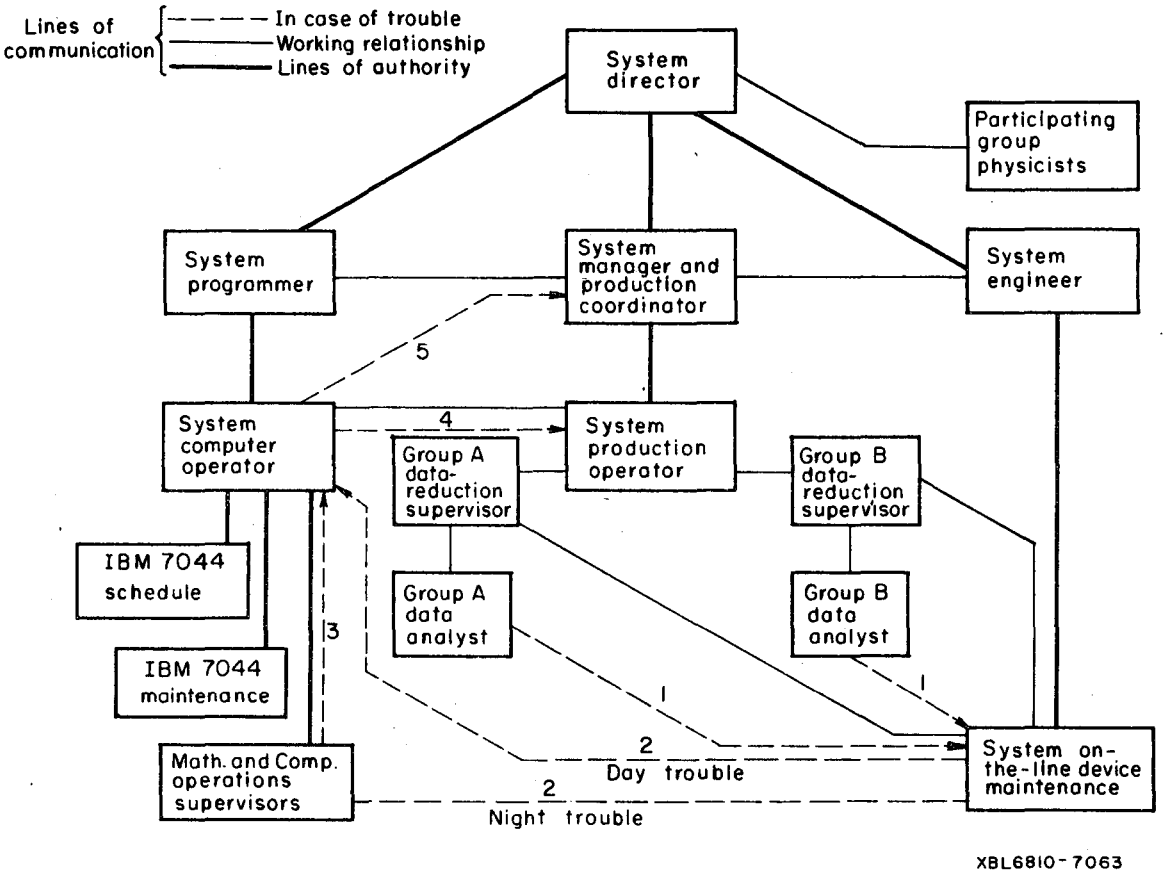

Fig. 2. Cobweb data reduction system organization scheme.

Production Operators

Working in close contact with the System Manager, are responsible for the day-to-day flow of data from the scan-card input to the tape input of reconstruction programs. Are in charge of production scheduling. Work closely with, and respond to the needs of, the participating group's data-reduction supervisors. Working in close communication with Computer Operations, have the responsibility of loading and unloading the 7044 as it pertains to system production.

Participating Physics Group Data-Reduction Supervisors

Responsible to their respective physics groups, with a close working relationship with system production operations that ensures that the input to the Cobweb system (scan cards) is accurate and expresses the priority needs of their groups. Their responsibility for their respective Data Analysts assures that the Data Analyst is informed of changes in the system scanning and measuring technique; also filters operators' suggestions to the director.

System (On-Line) Maintenance Personnel

In charge of trouble-shooting failures of the system. Working closely with Physics group Data-Reduction Supervisors, guarantees that the on-line equipment operates up to specifications, and calls on System Engineering for help with engineering problems.

C. System Operation

1. Scanning Operation

a. General procedure

The scan for event types is done in the conventional manner, i.e., film is driven and grids are overlaid off-line. However, the recording of the location of the event on the film, as well as the event type, and any special comments that aid the measurer and physicist in evaluating the event, occur on-line via a teletype at the scan table (see Fig. 3). The advantages of this approach are threefold:

(i) The scan table is free of papers, pencils, etc.

(ii) The costly and time-consuming task of keypunching and verifying punched cards is eliminated.

(iii) Supervision of scanning personnel as well as an auditing and evaluation of the scanning job can be taken care of by one person with the computer output tapes.

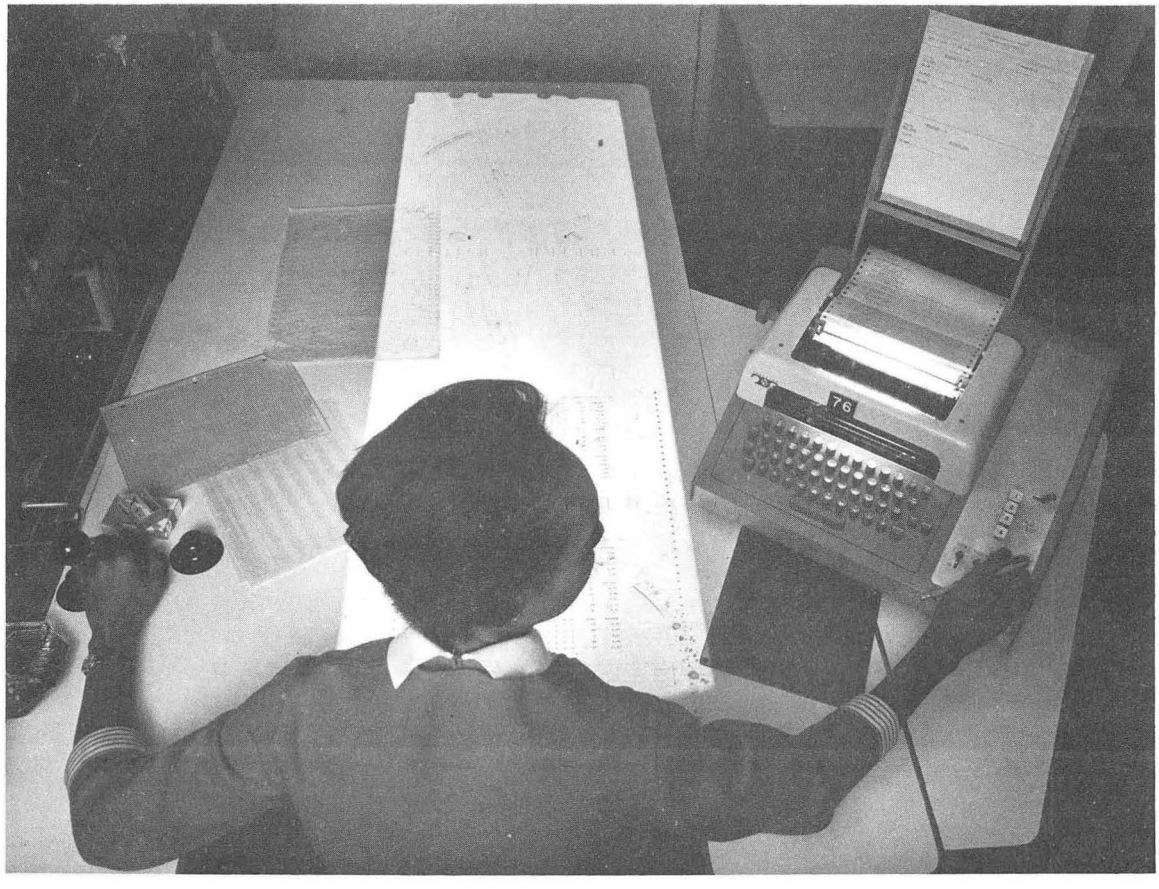

CBB 6810-6072

Fig. 3. SP5A scan-table with on-line Teletype.

b. Detailed procedures

(1) "Sign-on" procedure

When the scanner turns on his scan table he is connected via a teletype to the computer. In the following dialog between operator and computer, UNDERLINED items are typed by the operator; all other CAPITALIZED items are typed by the computer.

SIGNON, RG, PB (press "line feed," which transmits message to the computer)

scanner's initials — physics group designation (here Powell-Birge)

TIME= 15 11.71 — hr/min/min/10

42268 — date: April 22, 1968

SCTBØ1 — scan table no.

EXPERIMENT -- 47 (press line feed)

ROLL -- 6010 (press line feed)

STARTING FRAME -- 0404 (press line feed)

TYPE SCAN -- FIRST (or CHECK) (press line feed)

BEGIN SCANNING --

(2) Scanning procedure

The operator types in data for the first event:

0404, E244, P324/1, R102 (press line feed)

frame, fid. grid, vertex grid, sub-exp. evt-type code, stopping track

Note: a solidus (/) must follow grid no. and precede sub-exp. evt-type code

The computer immediately follows with the full scan image:

6010 0404 E244 P324 4702AA24 25134 80422 RG R102

roll, frame, fid. grid, vertex grid, exp no., event type, scan card, date, scanner's initials, comments*

*R = stopping track; 1 = vertex; 02 = track

Another example:

0405,E244,J218/2,K101
6010 0404 E244 J218 4702AA75 25150 80422 RG K101

If, while scanning, the operator wishes to change the sign-on experiment no.,

The operator types the scan-card data:

0404, H127, M132, N026/1, E46 (press line feed).

new exp no.

The computer follows with this amended scan image:

6010 0404 H127 M132 N026 4604AA05 57237 89422 RG

new exp no.

On the next entry, the experiment will return automatically to the sign-on procedure exp no., if the operator doesn't once again change it via the prefix "E."

Another example, two vertices:

0416,E245,P324,M336/2
6010 0416 E245 P324 M336 4702AA75 25196 80422 RG

Another example, three vertices:

0417,E245,P324,M336,H425/3,K101
6010 0417 E245 P324 M336 H425 4702AA46 25243 80422 RG K101

Each vertex must have a teletyped grid coordinate. Solidus and sub-exp. evt-type code must immediately follow grid coordinates. "RANGE" and "KINK" comments (R102, K101) must follow sub-exp. evt-type code and precede comments. They must be separated from each other and from other comments by commas.

There can be only 72 typed characters per line and only one line per event.

The operator presses "return" to delete the line he is typing.

To reject an event, the scanner types "reject" (line feed) immediately after the computer has typed a scan-card image.

(3) Additional computer messages

WRONG BUTTON TRY AGAIN: Computer misunderstood or no one has signed on.

WHAT/: Computer does not understand message.

ILLEGAL: Item being typed during sign-on is not of correct form:
Experiment Number: must be two numeric characters.
Roll and Frame: must be four numeric characters each.
First or Check: are the only permissible types of scan.

FRAME NO. BAD: Even though the operator has typed the right number, the computer received junk.

BAD GRID: Self-explanatory.

BAD SCAN REPORT: Typed line is not of the general form required for a scan report (i.e., four digits of frame no., four characters of fiducial grid, four characters for each vertex grid, followed by a solidus and sub-exp. evt-type code)

ILL SUB/AL CODE: The sub-exp or evt-type code is incorrect for the experiment you are scanning.

RANGE ERROR: Self-explanatory.

KINK ERROR: Self-explanatory.

ELECTRON ERROR: Self-explanatory.

ILLEGAL PREFIX: Comments, if any (other than KINK and RANGE), must be preceded by a "C."

TOO MANY CHAR IN A FIELD: More than 12 characters are included between commas in scanner's comments.

(4) "Sign-off" procedure

This procedure includes dialog as follows:

SIGNOFF, RG (press line feed)

TIME= 17 22.42 42268

LAST FRAME SCANNED 0493 (press line feed)
or (1723, END OF ROLL, if end of roll) (press line feed)

THANK YOU.

2. Measuring

a. General considerations

In the development of the Cobweb system there was one focus: to make the measurement of bubble chamber events a rapid, accurate, reliable, and flexible technique.

Since the measuring task requires a great deal of concentration and judgment on the part of an operator, operator fatigue and disposition were prime concerns in the design of the equipment and program.

By observation, study, experience, and feedback from measurers (encouraged in numerous meetings), specific areas of operator annoyance and fatigue were identified:

Environmental conditions:
Temperature, humidity, drafts.
Noise level.
Light level (ambient room light, control buttons, projection screen, teletype).
Equipment placement.

Controls:
Placement--to eliminate unnecessary or awkward hand movements.
Ease of operation.
Labeling.
Color-coding.
Computer-controlled where possible, or automatic in hardware.

Operational fatigue factors (discovered as system became operational):
Automatic track following too slow and not holding track well enough.
Film drive not computer-controlled.
Computer-controlled stage motion not fast enough.
Necessity for decisions on which track to measure, especially in what order.

Need for easily read scan-card teletype output that would readily identify the event type.
Too many and too long operator-initiated messages to the computer.
Too much, too long, and too unclear communication from the computer.
Need for minimizing scanner's comments and assurance that they aid the measurer in deciphering a confused event.
Measuring technique not learned easily enough.
Delays in the system that interrupt the operational rhythm that is comfortable and pleasing to the operator.

Certain other factors, much more subtle, have also had an effect on the measuring. The "Big Brother" syndrome cropped up soon after announcement of the intention to proceed with the project. This attitude was overcome by careful involvement of the measurers in decisions that affected them; constant openness about the specifics and goals of the system design; careful programming of the computer to act and respond like a machine, not a person; suggesting that what the system was designed to do was like improving the automobile with an automatic transmission, but not proposing (because it was considered foolhardy) development of automatic steering. This emphasis on ultimate control of the system by the operator, and the advantage over the computer that is offered by his capacity for judgment, was successful in curing the syndrome.

A two-channel music system was installed, and has had some beneficial effect on operator disposition.

Another gain has been realized by what can be termed the nonremeasurement phenomenon. It seems that operators prefer to measure any given event only once. For conventional systems that are not on-line to computers this procedure is impossible: no matter how carefully the operator does his job, he cannot know whether the measurement was done without error, or with the right format. On-line operation removes the doubt. The assurance that an operator feels, once he sees "event complete" typed and knows that the measurement cannot be done better, indeed improves his attitude.

Pictures of measuring machine MP1D are shown in Figs. 4 and 5.

b. Detailed procedures

(1) "Sign-on" procedure

When the operator sits down to measure he pushes the computer "on"-"off" button to the "on" position.

To begin measuring he logs in by typing:

(a) SIGNON, XX, PB

operator's number or initials — physics group designation

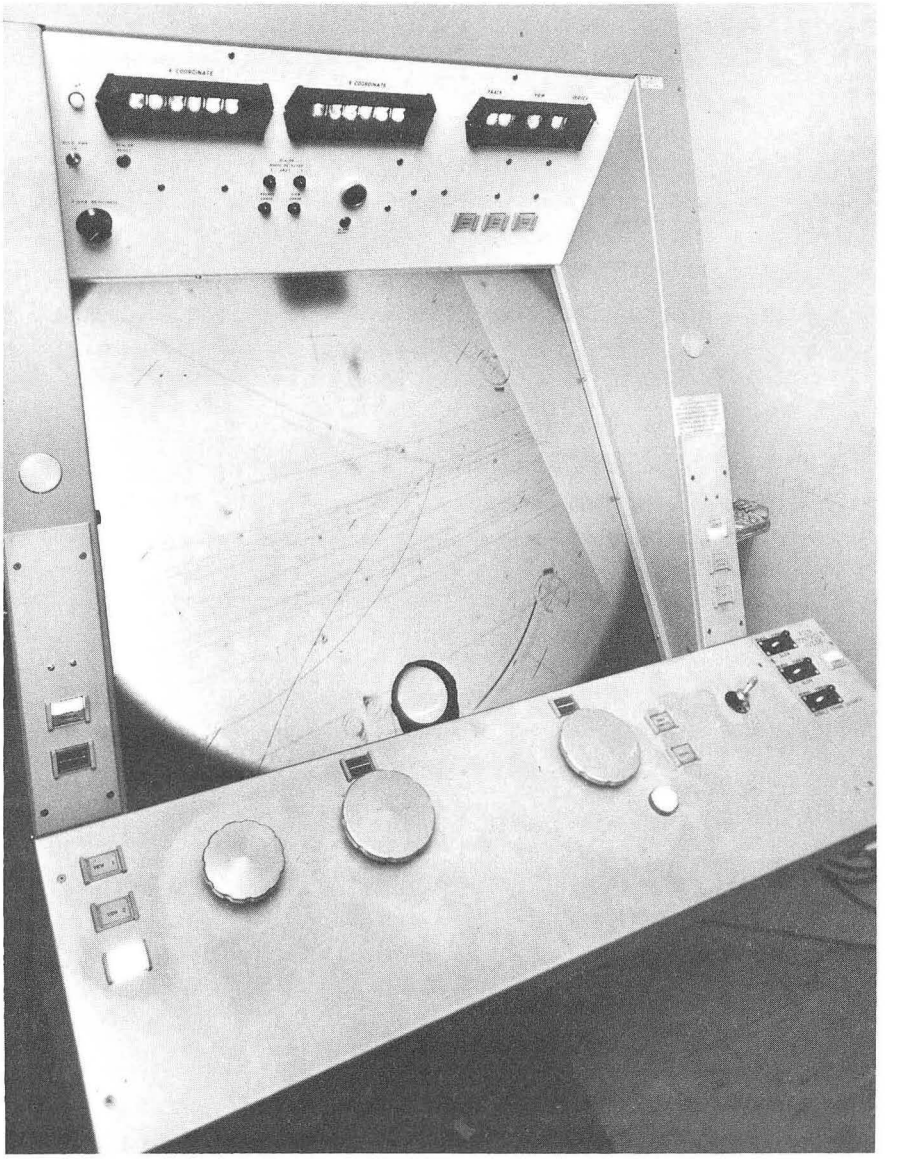

XBB 6810-6080

Fig. 4. Control console of MP1D Franckenstein.

CBB 6810-6082

Fig. 5. Rear view of MP1D measuring machine.

(b) The operator pushes "line feed" on the teletype ("line feed" transmits messages to the computer).

(c) The computer types to the operator the time of day, date, and machine designation.

Example: TIME 14 41.47 062967 MP1D,

i.e., 2:41 and 0.47 min (p.m.) June 29, 1967

(d) The computer then types the scan-card image of the first event to be measured, e.g.,

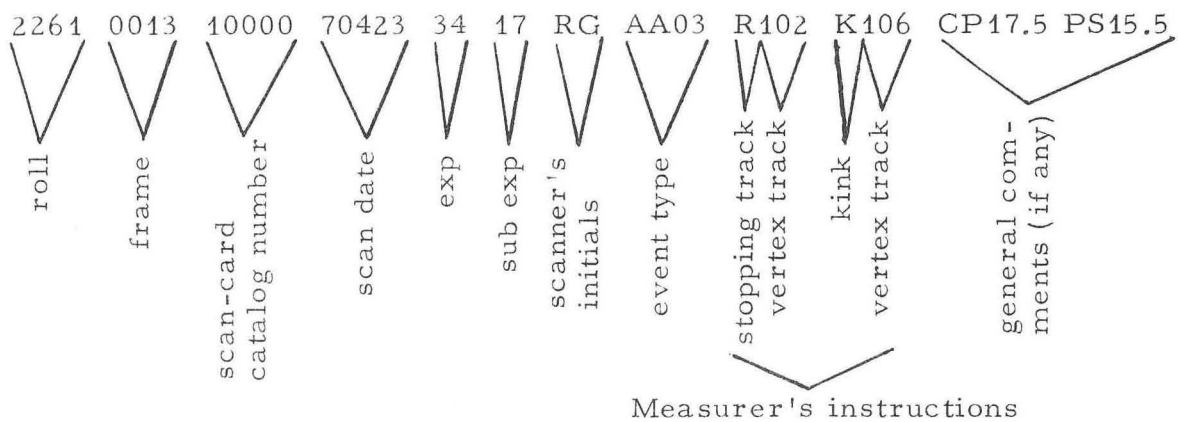

The operator locates the proper reel of film, loads it on the machine, and goes to view 3 of the event to be measured. On automatic-film-advance machines the operator types "FRAME, 0001" (pushes line feed), and the computer drives the film to the proper frame to be measured. Thereafter for that roll, the computer moves the film automatically.

The operator pushes the "go" button, and the stage automatically drives to the region of the first fiducial. If the computer does not drive the stage to the near vicinity of the first fiducial, the operator types FID (line feed), centers manually on the first fiducial in the first view measured, and presses "record." This new position is automatically entered into the program and adjusts all measured fiducials to it.

(2) Fiducial measurement

The status display panel indicates track Ø1, vertex Ø, view 3. Vertex Ø indicates the fiducial mode and track Ø1 indicates the first fiducial.

After the operator has recorded fiducial 1, the computer automatically drives to fiducial 2, and after recording there, to fiducial 3. When the record button is pushed, and the computer has received the XY coordinates, an audible beep sounds. (The beep is adjustable both in tone and in volume.)

(As seen on the platen)

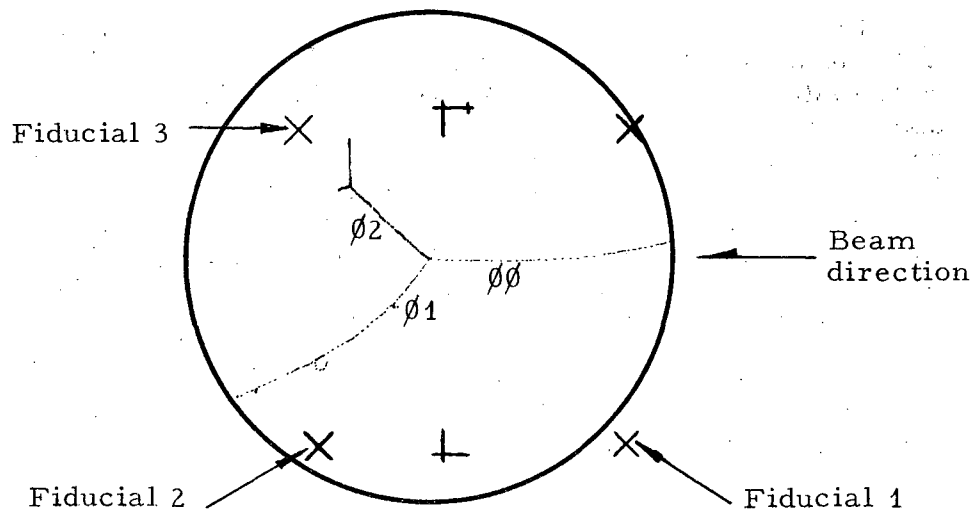

Sample event in Berkeley 25-inch hydrogen bubble chamber.

If the fiducials pass the validity (spacing) check in the program, the computer automatically drives the stage to the vicinity of the first vertex of the event to be measured. Otherwise the computer asks the operator to remeasure them.

There is a multiview option. If 3 views can be seen without moving the film, the program can be set to measure all fiducials in all views before starting track measurements.

(3) Track measurement

Note: All tracks are measured only once. A neutral track may or may not be measured as desired. The status display panel indicates track ØØ, vertex 1, view 3.

The operator positions the stage carefully and records the vertex. (Note: This is the only track in that vertex that needs a vertex measurement in each view.) The computer then turns on the automatic track following.

The measurer proceeds to measure the beam track away from the vertex, taking many points, measuring the total length of the track if possible. The exact end is not necessary unless it is a stopping (range) track. (Note: If the operator holds the record button down the points are automatically spaced at about every 1 mm on the film. The spacing is adjustable for different film formats.)

After the last point has been recorded on the track, the operator pushes the "track complete" button. A beep sounds here also.

The computer checks the track. If the computer finds the track O.K. it drives the stage back to the vertex. If bad, it tells the operator what to do. Example: "SIGMA TOO BIG, REM VTX" in which case the operator must manually move the stage to the vertex and remeasure the vertex point. This manual operation is performed to check the scalers. If the scalers check, the teletype types "OK, REM. TK, " in which case the operator remeasures the track that failed. If the vertex does not agree, the teletype message is "VERTEX BAD, REMEASURE VERTEX." If this happens the operator pushes the View Reset button and starts over with the measurement of the fiducials.

If a "track error" occurs on the first measured track on any vertex and the vertex check is all right, the track is remeasured, starting once again with the vertex point.

The status display panel indicates track Ø1, vertex 1, view 3, if the first measured track was O.K. The computer then automatically drives the stage to the exact position of the vertex and again turns on the automatic tracking.

The operator measures the outgoing prongs of the vertex in the following manner:
The first point does not have to be the vertex.
The operator measures the total length of each track away from the vertex, taking many points.
"RANGE" is typed by the teletype before each track (in each view) designated by scanners as a stopping track, in which case the last point must be measured in the center of the last bubble in each view. Likewise "KINK" is typed by the teletype before each track (in each view) designated by scanners as a track with a kink in it.

When all tracks have been measured and accepted in the first view, the computer changes the view number on the status display panel to the second view and the computer types V/C (= view complete). The film then drives to the next view to be measured and the stage moves to the vicinity of the first fiducial to be measured in the second view.

The operator measures the second view, following the same procedure for measuring view 3.

If the second view is O.K., the computer types V/C and drives the film to the last view.

The operator measures the last view.

If the last view is O.K., the computer types EVT. COMP = "event complete, " followed by another scan-card image. The stage drives to "stage center" (a mechanical limit position where the scalers are reset), and the film advances to the next event.

The operator then begins a new event by pushing the "go" button and repeating the above sequence.

(4) Teletyped communication between computer and operator

Computer-initiated messages are as follows.

Message	Meaning
EVT. COMP.	Event completed.
REMEASURE ALL FIDUCIALS IN THIS VIEW	Results from bad measurement, from wrong view being measured, or from pushing of view reset.
V/C	View completed.
WHAT/	Computer's response to any illegal message.
REMEASURE LAST FIDUCIAL	Self-explanatory.
SIGN ON (SIGN OFF) ERROR. PLEASE TRY AGAIN	Usually something left out of message or improper initials used.
WRONG BUTTON, TRY AGAIN	Self-explanatory.
REM. VTX	Remeasure vertex (stage must be manually driven to vertex). Comes after a statement of track error, such as:
(i) MONOTONY FAILURE	Points not consecutively placed one ahead of another along the track.
(ii) POINTS TOO CLOSE	Less than 35 μ between points.
(iii) SIGMA TOO BIG	The rms deviation of points to a fitted curve is too large; typically it should be 10 μ for beam track, 15 μ for outgoing prongs.
(iv) BAD POINTS	If a single point deviates from a track more than three times the average deviation of all points, or by more than 15 μ, the program rejects the track.

(v) VERTEX POINT BAD	If the vertex point (as measured in track ØØ) does not line up with the rest of the track, the program rejects the track. A monotony error involving the vertex point also gives this error message.
(vi) END POINT BAD	As above, for the last point on the track. Usually results when the automatic track-following mechanism leaves the end of a track.
(vii) SCAN CARD ERROR	The computer has discovered a scan-card error. This implies that the operator signed on for the wrong physics group, or the event type or experiment punched in the scan card is unknown to the computer.
(viii) MORE THAN 90° CURVE	When a track bends through an angle of more than 90 deg, the program rejects it.
(ix) LESS THAN 8 PTS. ON TRACK	If the track bends more than 60 deg, more than eight points must be taken or the program rejects the measurements.
(x) TRACK SHIFT/SPLIT	Major digitizer or measuring error. The track appears to have been measured in two discrete segments and therefore is bad.
OK, REM. TK	Vertex O.K., remeasure track.
NOT ENOUGH POINTS	The minimum points necessary are: two for the beam track, one for the outgoing prong.
VERTEX CONFLICT/VIEWS REDO EVENT	The vertex point in all views is being compared to make sure the operator has measured the same event in all views. If an error occurs it is not checked until the third measured view; the operator must then remeasure the entire event.
VERTEX BAD, REMEASURE VERTEX	Self-explanatory.
MORE SCAN CARDS NEEDED	Self-explanatory

SCAN CARD ERROR. CARD IGNORED	Self-explanatory.
REMEASURE ENTIRE EVENT	Results either from a bad measurement, from measuring the wrong view, or from pushing of view reset.
EVENT RESET	The measurer pushed the "event error" button.
TOO MANY POINTS, TRY AGAIN	More than 48 points taken on a track.
SIGNON ERROR. TRY AGAIN	Powell-Birge measurer should use two initials; Trilling-Goldhaber measurer should use a number between 1 and 99.
THE PERSON STILL SIGNED ON IS XX	You must sign off the previous measurer before signing on yourself.

Operator-initiated messages are as follows.

SIGNON, SIGNOFF: as described above.

ACCEPT: The operator wants the computer to save a track that has failed twice, e.g., a stopping track with a hook on its end.

IGNORE: The computer should not expect any measurement of the track.

REJECT, COMMENT: Rejects the event and explains why the measurer can't measure the event.

(5) Control buttons

Each of the following push-button switches generates a distinct function code that is transmitted to the computer.

"Computer on-off" button: Depression of this button alternately makes and breaks a connection between a measuring machine and the computer. This button is backlighted to indicate whether the measuring machine is "on" (i.e., on-line to the computer) or is "off." This is the only computer control button that is functional when off-line. It operates by transmitting a function code to the computer. The computer then replies to setting or resetting a flip-flop in the measuring machine's "miscellaneous register." The set will designate "on" and the reset "off"; "off" will also turn the teletype off and inhibit computer control of the stage servos.

"Go" button: This button is depressed just prior to measurement of the first fiducial of the view of an event. Upon depression of the button the stage is moved from stage center position to the approximate position of the first fiducial.

"Record" button: Depression of this button causes the transmission of X-Y coordinates to the computer for the purpose of measuring fiducials, vertices, and tracks. If this button is held depressed while the measuring machine stage is in motion, X-Y coordinates are transmitted to the computer each time the stage moves a distance determined by (Δx counts) + (Δy counts) = constant.

"Track Complete" button: This button is depressed upon completion of the measurement of each track. The computer then immediately moves the stage to a new location (i.e., to a new fiducial, vertex, or stage center).

"Track Error" button: Depression of this button deletes the last measured fiducial, track, or partial track. Successive button depressions successively delete tracks or fiducials in the reverse order of their measurements. Each time the button is depressed the stage moves back to the track vertex or fiducial that was just deleted.

"View Error" button: This button is used to delete an entire view measurement or the partial view upon which measurements are being made. The stage automatically moves back to the location of the first fiducial.

"Event Error" button: This button is used to delete the event currently being measured. The stage is automatically moved to stage center position, and "go" must be depressed prior to starting remeasurement.

"Track Inhibit" switch: This switch when "on" allows recording during automatic track following only when the track following is in balance and the automatic tracking has a track signal.

Note: Points can be taken manually at any time.

3. Computer Operations

Appendix A is a description of the cold-starting and terminating procedure for the Cobweb computer. Also described in the appendix are the makeup of the scan-card deck and a physical layout of the tapes, cards, and switches necessary to put the Cobweb computer into operation.

III. SYSTEM CONFIGURATION

A. Cobweb Hardware

The Cobweb hardware consists of an IBM 7044 computing system, a "multiplexer/interface" located at the computer installation and connected to the computer via the "direct data connection," one measuring microscope, four small Franckenstein measuring projectors (MPI's) with a fifth Franckenstein to be added prior to the end of 1968, and a scan-table—teletype interface located at the multiplexer-interface, with six teletypewriters currently installed (one at each of six remote scan tables). A teletype also is located at each measuring machine. However, these teletypes are tied into the computer through their respective measuring-machine electronics packages rather than through the scan-table—teletype interface.

The present device distribution is shown in Fig. 6. One measuring microscope (MM-E) and two Franckensteins (MP I-C and MP I-D) are attached to block one. Three Franckensteins (MP I-A, MP I-B, and MP I-E) are attached to block 2. The scan-table—teletype interface can accommodate 32 teletypes, and constitutes one device on block 3.

B. Computer Hardware

The digital computer used in the Cobweb project is an IBM 7044 (see Fig. 7). This medium-sized scientific computer has 32 768 words of memory (each word having 36 bits), a 2.5-μsec cycle time, three data channels, an 800-card-per-minute card reader, a card punch, a 600-line-per-minute printer, and ten magnetic tape drives (800 bits per inch, 90-kc character transfer rate). The Cobweb interface is connected to the computer via the direct data connection within a data channel, allowing a maximum data rate of one 36-bit word every 6 μsec. The software operating system used is a modification of the IBM IBSYS system, version 6.

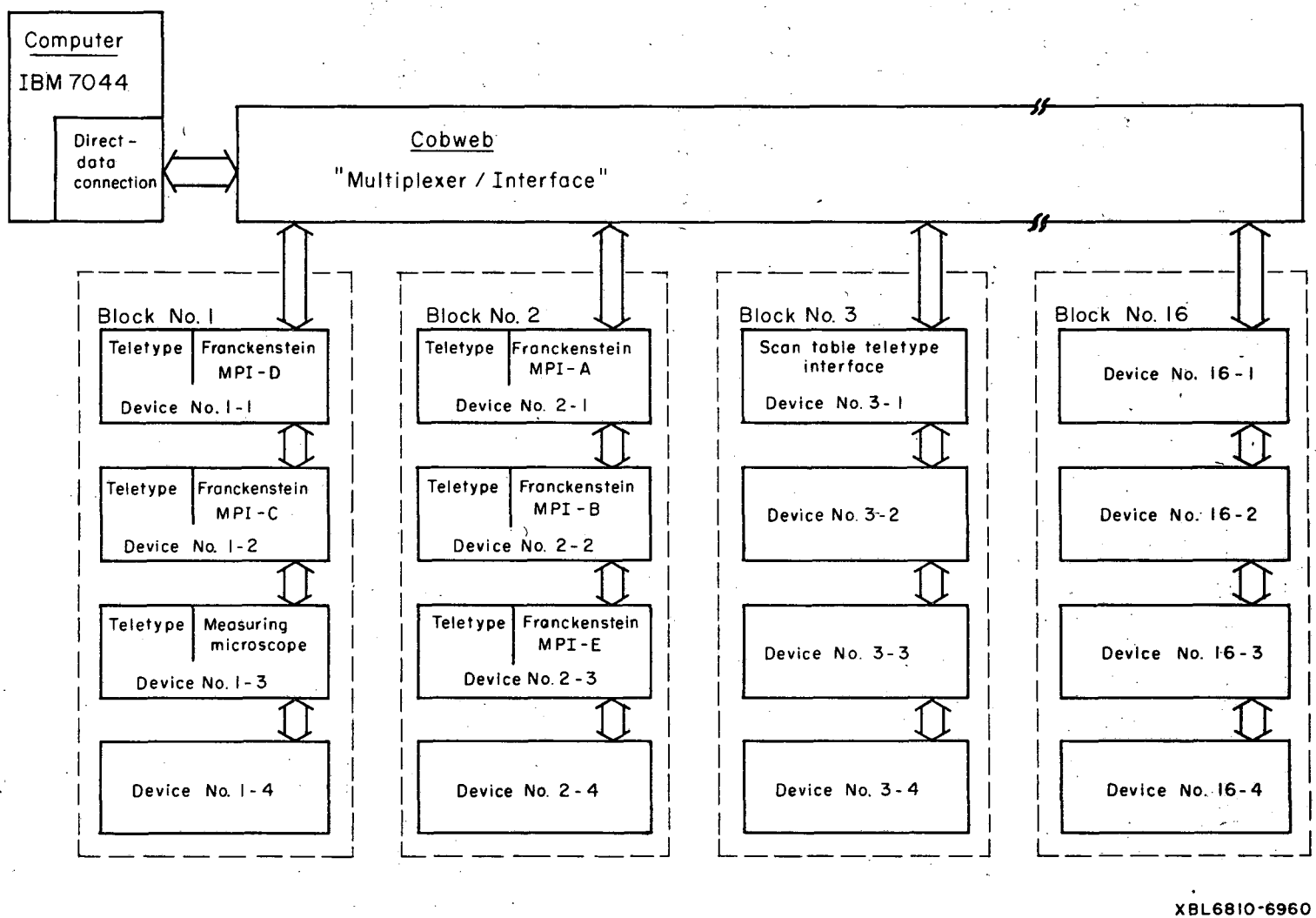

Fig. 6. Block diagram of Cobweb interface.

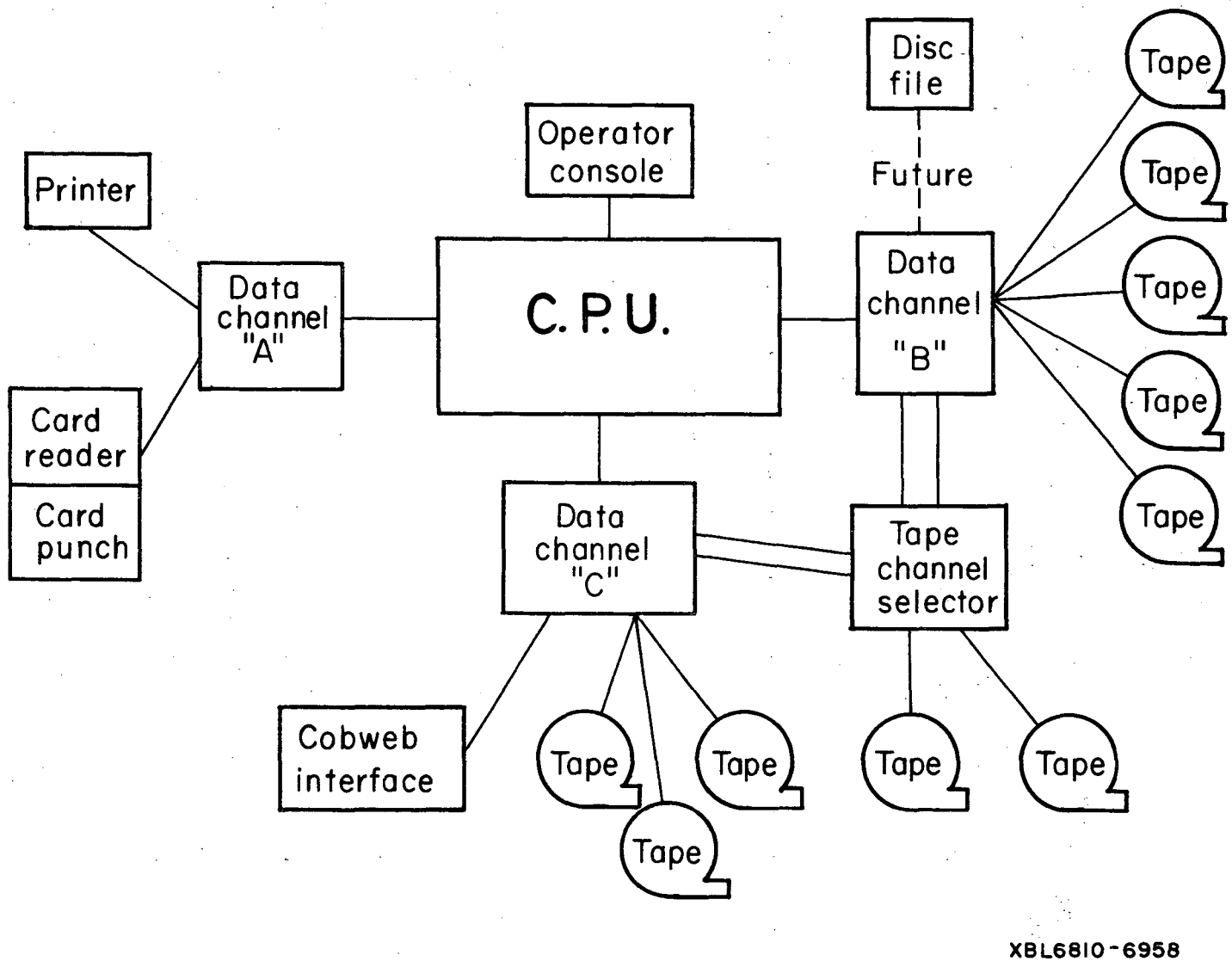

Fig. 7. IBM 7044-Computer configuration.

IV. COBWEB HARDWARE DESCRIPTION

A. Interface

All measuring machines and the teletype interface are tied to the 7044 direct-data connection through the multiplexer-interface as shown in Fig. 6. The multiplexer is organized to accept up to 16 blocks of four on-line devices each, that is, a total of 64 devices. We have chosen to facilitate this system by arranging the 36-bit IBM data words (both input and output) in the following format:

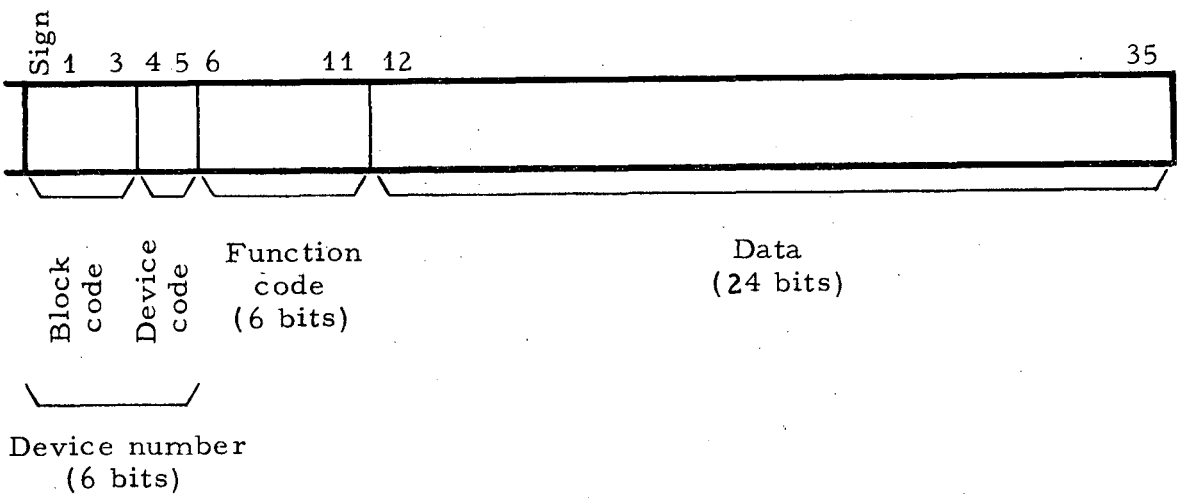

The six most significant bits (Sign through 5) are used to designate a particular on-line device, for example, a specific Franckenstein, the measuring microscope, or the teletype interface. The device number, or address, is broken into a four-bit block code and a two-bit device code, thus allowing Cobweb to have up to 16 blocks of up to four devices per block tied on-line to the 7044. This arrangement enables us to physically locate a block of four devices at a remote location, while requiring only one set of input-output transmission cables to that block.

The next six bits (6 through 11) designate a "function" at the addressed device. For example, in a Franckenstein, the function codes for a computer input word designate a push button, the teletype, or transmission of coordinates to the computer for computer-controlled stage movement. Other function codes are sent to the computer to indicate the abnormal status of various device interlocks, and as feedback signals to the computer to acknowledge the completion of computer-commanded device operations.

During computer output, function codes are used to address the various data registers at a selected device. For a Franckenstein these

registers receive data such as stage velocity vectors for computer-controlled stage movement, teletype characters, data for computer-controlled film movement, and various display and alarm information.

The remaining 24 bits of the IBM word (bits 12 through 35) are reserved for any data associated with a particular function code, such as Franckenstein stage coordinates, teletype characters, and other aforementioned data.

B. Data Transmission

1. To Measuring Machines from Computer

First consider a command or data transfer from the computer to a measuring machine register. A 36-bit data word along with a "channel ready-write" (CRW) is presented to the multiplexer-interface from the computer's direct-data connection on Channel C. The block code is decoded in the multiplexer, selecting one of the 16 device blocks. Device code, function code, and data are then gated to the selected block. The device code is checked at each device within the selected block and used to gate the function code and data bits into the addressed device. The function code is then decoded within the selected device and used to distribute the 24 bits of data to one of 64 possible addresses. For an on-line Franckenstein we use only five of the possible 64 function codes, and therefore gate the data to one of five registers. The device code, function code, and data are transmitted from the multiplexer to the selected block for a period of 4 μsec. At the end of that period the multiplexer sends a "direct-data-demand" (DDD) pulse back to the computer to acknowledge that the data have been received by the external device.

Data transmissions to the respective registers in each of the six measuring machines are similar in format. However, since there are some differences between the various measuring machines, the data formats may vary from machine to machine. The three Franckensteins--MP I-A, MP I-B, and MP I-D--are similar in hardware configuration and input-output format arrangement. For this reason the following format explanations refer to these three machines and are considered the normal formats. Deviations in the other measuring machines from these normal formats will be pointed out.

The normal formats for the five registers at each measuring machine are as follows:

a. Servo register format

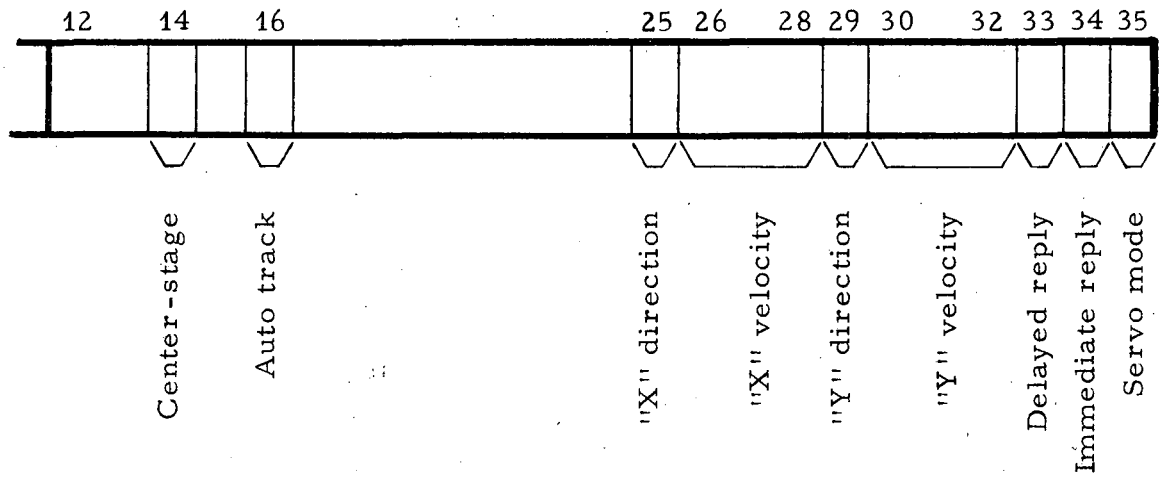

This register is used during computer control of a measuring machine stage movement. During a typical servo operation the computer first transmits a data word into the servo register with "one's" in the "servo mode" and "immediate reply" bit locations. The measuring maching replies by sending X and Y stage coordinates back to the computer. Once the stage destination and its current location are both known, the required X and Y distances and directions of motion are computed. The desired X and Y velocities are then determined from the respective computed distances. Three bits designating X velocity and three bits designating Y velocity, along with respective direction bits and "one's" in the delayed-reply and servo-mode bit locations, are then transmitted back to the measuring machine servo register. The velocity vectors in the servo register are used as inputs to the X and Y servo amplifiers, and the delayed-reply bit is used to trigger a one-shot circuit. When the one-shot times out (in 10 to 100 msec, depending on the measuring machine), new X-Y coordinates are sent to the computer. The velocity vectors are then updated and transmitted back to the servo register along with delayed reply and servo mode. This loop is repeated until the measuring-machine stage is positioned to within a specific tolerance of its destination. At that time the computer sets bits 25 through 35 of the servo register to zero, thus terminating the computer-controlled stage movement.

The three velocity bits per axis are sufficient to specify eight velocities (including zero). However, we have found that three velocities (fast, slow, and zero) per axis are adequate for the Franckensteins,

and we use only two velocities (on and off) per axis on the measuring microscope. The five Franckensteins have automatic track-following servo systems.[2] This automatic tracking can be activated or deactivated by alternately depressing an "auto-track" push button at the Franckenstein, or upon command from the computer. The latter is accomplished by sending a "one" to bit 16 of the servo register, and is generally used to activate automatic tracking directly after the computer has moved the stage to the starting point of a track that is to be measured. It should also be noted that the start of any computer-controlled stage movement automatically deactivates automatic track following.

The Franckenstein stages are also outfitted with cam-actuated switch arrangements used to define a stage reference position. The reference position is termed "stage center," even though it generally defines a point other than the actual stage center. These switches are usually positioned so that when the stage is at "stage center" the film data box appears at a specific location on the Franckenstein viewing screen. The command for the servos to drive the stage to "stage center" always comes from the computer through bit 14 of the servo register. It can be initiated by the computer program, or by depression of a "center-stage" button at the Franckenstein, which in turn sends a function code to the computer requesting a "center-stage" command. The "stage center" is also used as a reference point to reset the X-Y scalers and to perform rough checks on them. All Franckensteins on Cobweb use linear incremental encoders (Ferranti, or Heidenhain) fed into reversible scalers to digitize the stage coordinates. Resolution of these systems is 1 μ. Additionally the stage screws were replaced by ball screws for high-speed operation--5 in. per second.

b. Teletype register format

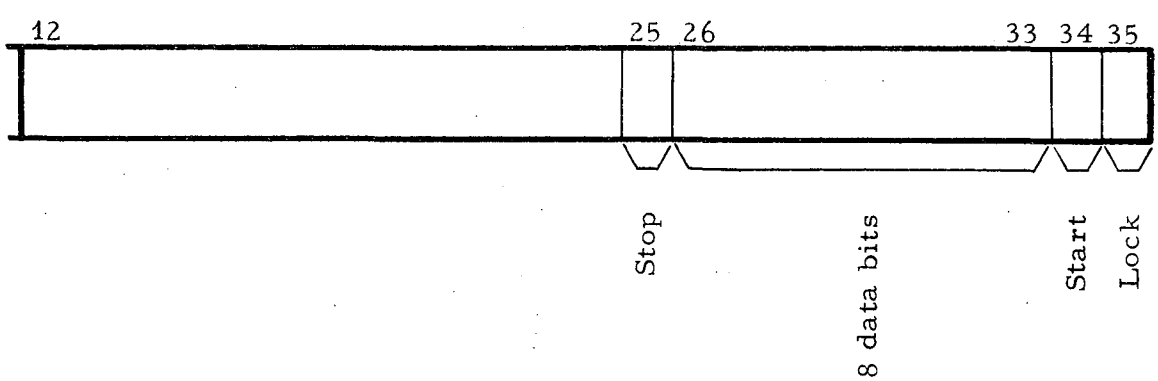

The teletype register is used to receive an eleven-bit teletype character from the computer and serially shift it into the teletypewriter. The eleven-bit character includes a "start" bit, eight "data" bits, and two "stop" bits (stop and lock). After the character has been shifted from the register to the teletype a function code, "teletype ready to receive," is fed back to the computer to signify that the teletype is indeed ready to receive another character.

c. Display register format

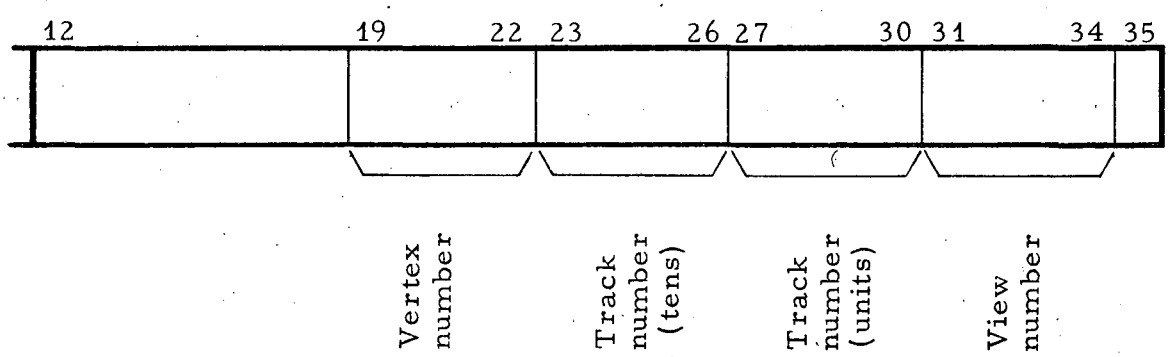

The display register is used to provide data for numerical displays at the measuring machine. These displays are used to identify the view, track, and vertex numbers associated with the next measurement.

d. Miscellaneous register format

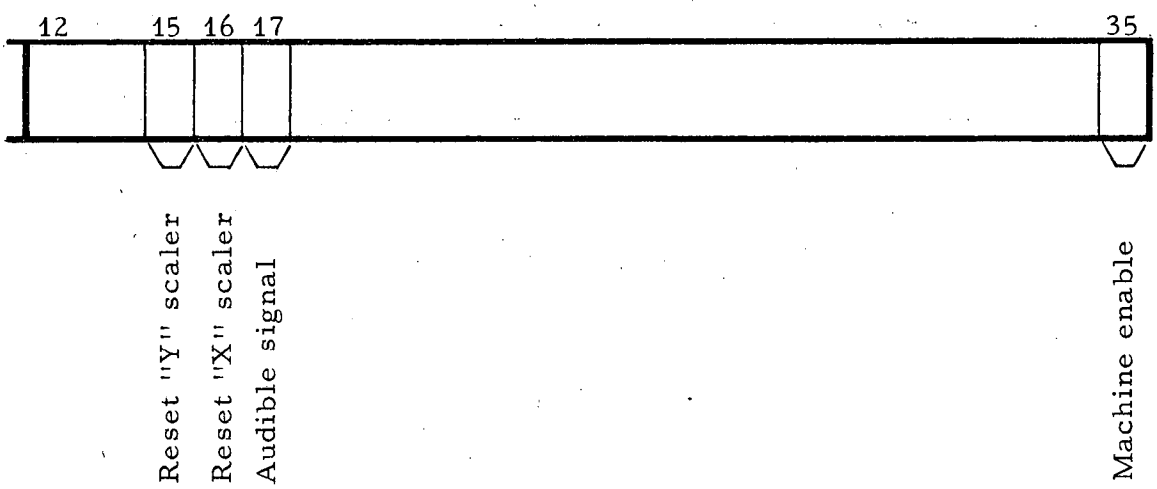

Individual bits of the miscellaneous register are reserved to enable or reset various machine functions, and to initiate any desired audible signal or to light indicator lamps. Only four bits of this register are currently being used.

"Machine enable" (bit 35) is used by the computer to essentially turn a measuring machine on or off. Unless there is a "one" in this bit position the measuring machine is literally disconnected from the computer with the exception that a "computer on-off" push button at each measuring machine can transmit a function code to the computer. If the computer is operational in Cobweb mode it responds by transmitting a "machine enable" bit to the respective machine, thus connecting it to the computer. Depression of "computer on-off" when the measuring machine is connected on-line to the computer works in a similar manner to disconnect the machine from the computer.

The "audible signal" (bit 17) is used as a response to the depression of a "record" button at a measuring machine. This bit is used to generate a short tone at the machine to acknowledge that the computer has received "record" function codes along with the respective X-Y stage coordinates.

The "reset X scaler" (bit 16) and "reset Y scaler" (bit 15) bits are used to reset the stage coordinate scalers. This is usually done directly after the computer has moved the stage to "stage center."

e. Film-move register format

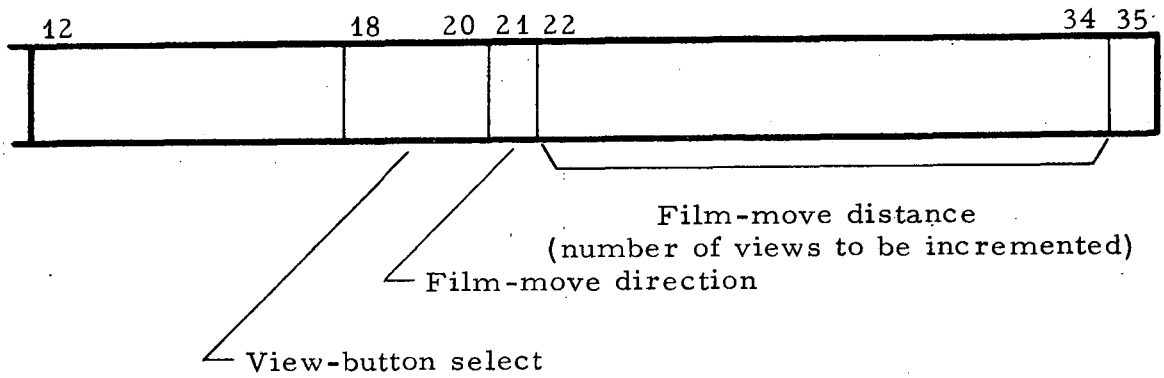

The film-move register is used by the computer to automatically move film, and to select and indicate to the Franckenstein measurer the view that is to be measured. Automatic film movement along with view selection is implemented on three Franckensteins, MP I-A, MP I-B, and MP I-D. MP I-C will be added to this list in the near future. These four machines are so designed that when they are measuring Berkeley-format film (i.e., film with all three views of a frame on the same roll) only one view of a triad can be projected on the Franckenstein without moving the film.

The "film-move distance" bits (20 through 34) are used to specify the number of view increments by which the film is to be moved, and bit 19 is used to specify the direction. To move film in the forward direction a "zero" is loaded into bit 21 for direction and the "true" binary value of incremental distance is loaded in bits 22 through 34. To move film in the reverse direction a "one" is loaded in bit 21 for direction and the "two's complement" of the binary value is loaded in bits 22 through 34. The computer can move film up to 2^{13} views (i.e., 8192 views) in either direction by sending one data word to the Franckenstein.

The "film-move distance" bits of this register are actually part of a reversible scaler. After the scaler is loaded the film clamps are opened and the film servos start to move the film in the direction specified by the "film-move direction" bit. Along the edge of each view of the film are two small black squares called "view-increment" marks. Two photo detectors are mounted in the film platen in such a position that as the view-increment marks pass over them, first only one detector is covered, then both, then only the second, and finally

neither detector is covered. By this means the direction of film movement can be detected in much the same way as direction is determined in a bidirectional incremental encoding system. The view increment marks can therefore be used to count the reversible scaler either up or down, depending upon the direction in which film is being moved. Except during film stop and start transients, the scaler always counts toward zero. The film is moved at maximum velocity (up to 15 ft/sec) until it is within 15 views of the desired view. The film velocity then decreases as determined by a digital-to-analog ladder connected to the least significant bits and the sign bit of the reversible scaler. Since we use a reversible scaler, when the desired view is reached we can servo the view increment marks onto the photodetectors in the platen to give us good film positioning before and during film clamping.

Once the film is positioned and clamped, a function code entitled "film-move finished" is fed back to the computer. If an error occurs in counting, the operator can drive the film manually view by view, or in fast or slow slewing motion. No attempt is made to have the computer involved in such corrective procedures.

Bits 18, 19, and 20 of the "film-move register" are used to automatically select and illuminate one of three view buttons at a Franckenstein. If the computer moves the film to a view 3 it also automatically illuminates the "view-3" push button. After that view is measured, the computer automatically moves the film to the next view and illuminates the associated view button, and so on. These view buttons can also be used by the operator to initiate view selections. This will be explained later.

Franckenstein, MP I-E, does not have computer-controlled film handling. However, it does have three lens systems, so that all three views of Berkeley-format film can be viewed without moving film. This is done by opening a shutter at the selected lens. In this machine, therefore, the three "view button select" bits are used not only to illuminate the proper view button, but also to select the proper view shutter.

2. <u>From On-Line Measuring Machines to Computer</u>

The format of the 36-bit input word to the direct-data connection is identical to the format of the output word.

A sequential priority system is used to collect data from the various devices connected to the multiplexer. It samples all machines each 10 msec. A "load pulse" must be transmitted from the multiplexer to the on-line devices before any data from the devices can be gated into the multiplexer. A single load pulse is transmitted to all on-line devices simultaneously. If one or more functions requiring computer interrupt (e.g., depression of a record push button, typing a teletype character, etc.) have occurred at any of the devices, the load pulse stores the fact of the occurrence in associated "function

flip-flops" at the device. If any of the function flip-flops are in the "set" state in any of the blocks of devices, an "interrupt request" is generated within the respective block and transmitted back to the multiplexer. The interrupt requests are fed into a gate chain at the multiplexer to establish a serial priority system. A signal is passed down the gate chain until the first interrupt request is encountered, thus selecting a block of devices for data input to the computer.

The function flip-flops within the selected block are serviced in serial order. That is, all function flip-flops in the first device are serviced, then those in the second device, etc. If more than one function flip-flop is set per device, they are serviced in the same serial manner.

By "servicing a function flip-flop" we mean that the output of the first function flip-flop encountered that is in the set state is used to generate a device code and function code, and to gate any associated data onto the 24 data lines. This information is sent to the multiplexer, where the block code is added to form the complete IBM data word. If the direct-data connection presents a channel-ready-read (CRR) to the multiplexer, the IBM data word is sent to the direct-data connection along with a direct-data-demand (DDD) pulse. After the data input to the computer is complete, removal of CRR signals the multiplexer to advance to the next function flip-flop that is in the set state. The multiplexer in turn transmits an "advance" pulse to the block of devices that originated the data that were just put into the computer. The advance pulse resets the function flip-flop that defined those data. This allows the next set function flip-flop in the priority chain within that block to generate a device code and function code, and to gate any associated data onto the 24 data lines. An "advance-return" pulse is also sent back from the block to the multiplexer to indicate that new data are being presented. This servicing procedure is repeated until all function flip-flops within the block are serviced. At that time the interrupt request for that particular block is removed from the priority gate chain in the multiplexer, allowing the next interrupt request in the chain to be serviced.

This servicing procedure is continued until all function flip-flops in all device blocks have been serviced. An "end of record" is then sent to the computer.

The following is a list of the function codes that can be sent to the computer from the various on-line measuring machines:

Function code	Category	Function title	Are additional data sent with the function code?	Measuring machines
1	(1)	"X" servo coordinate	Yes	All
2	(1)	"Y" servo coordinate	Yes	All
3	(2)	"X" record coordinate	Yes	All
4	(2)	"Y" record coordinate	Yes	All
5	(2)	Track complete	No	All
6	(2)	Track reset	No	All
7	(2)	View reset	No	All
8	(2)	Event reset	No	All
9	(4)	Teletype keyboard character	Yes	All
10	(3)	Teletype ready to receive	No	All
11	(2)	Go	No	All
12	(2)	Computer on-off	No	All
13	(3)	Stage centered	No	All Franckensteins
14	(2)	Center-stage request	No	All Franckensteins
15	--	--	--	--
16	(5)	Stage limit	No	All
17	(2)	View command	Yes	Four Franckensteins (MP I-A, MP I-B, MP I-C, MP I-D)
18-20	--	--	--	--
21	(3)	Film move finished	No	Four Franckensteins

For further consideration, these function codes can be broken into five categories as follows:

a. Stage-servo category

Function codes 1 and 2:

These function codes are used during computer control of a measuring-machine stage movement, as explained in the description of the servo register format, IV B 1a. They are used as a response to either the immediate-reply or delayed-reply bits transmitted from the computer to the servo register of the respective device. The device responds by sending, to the computer, function code 1 along with the stage X-axis coordinate (in the data portion of the word) followed, in succession, by function code 2 along with the Y-axis coordinate.

We can say, therefore, that function codes 1 and 2 are used to (i) identify the respective stage coordinate, and (ii) to tell the computer that the coordinates are being sent (always in consecutive pairs) in response to a computer request. To date we have used this facility only during computer-controlled stage movement.

b. Push-button category

Ten of the function codes fall in the category of having been originated at a measuring machine as a result of pressing a push button.

Function codes 3 and 4:

These functions are similar to 1 and 2 in that function code 3 is transmitted to the computer along with the X-axis coordinate, and function code 4 along with the Y-axis coordinate, and both are always transmitted in succession. They differ from function codes 1 and 2 only by the fact that their transmission is initiated at the measuring machine by depression of the "record" button.

Function code 5:

Function code 5 is generated by depression of the "track-complete" button, and is used strictly to indicate that the measurement of a bubble track has been completed. The computer usually responds by moving the stage or the film (or both) to the start of the next measurement.

Function codes 6, 7, 8:

These function codes are generated by the respective depressions of the "track-reset," "view-reset," and "event-reset" push buttons. These buttons are used by the measurer to indicate to the computer that the measurer would like to delete and remeasure the last track, the selected view, or the entire event.

Function code 11:

This function code is generated by depression of the "go" button, and is used to alert the computer that film has been moved to the proper frame and all conditions have been met for the operator to start measurement of an event.

Function code 12:

Depression of the "computer on-off" button transmits function code 12 to the computer, requesting a "one" in bit 35 (machine enable) of the miscellaneous register if the associated measuring machine is not on-line, or a "zero" in bit 35 if it is on-line. In essence, this connects the measuring machine to the computer if it is not so connected, and disconnects it if it is connected. This is the only function code that can be sent to the computer from a measuring machine if it is in the disconnected state (i.e., if bit 35 of the miscellaneous register at that machine is a zero).

Function code 14:

This function code is sent to the computer upon depression of the "center-stage" button, and is a request for the computer to send a "center-stage" command back to the measuring machine via bit 14 of the servo register. After the stage has been centered the measuring machine responds to the computer with function code 13 to indicate that the stage is centered. It is essential to loop through the computer in this fashion so that the computer can be aware that a stage-centering operation is taking place and therefore does not attempt a conflicting operation.

Function code 17:

Four Franckensteins (MP I-A, MP I-B, MP I-D, and soon MP I-C) are implemented to use the "view-command" function code. This function code works in conjunction with computer-controlled film movement as explained in the description of the film-move register format. Each of these Franckensteins has three backlighted view selection buttons grouped with a fourth alternate action button labeled "auto-manual." With the auto-manual button in the "automatic" state, the computer controls the selection of all views by automatically moving the film to the proper view and illuminating the proper view button. By putting the auto-manual button in the "manual" state, the measurer can enable the view buttons so that the view selections can be made. Each time a view button is depressed (in the manual mode) function code 17 along with a view-one, view-two, or view-three bit in the data word is sent to the computer. The data word format is as follows:

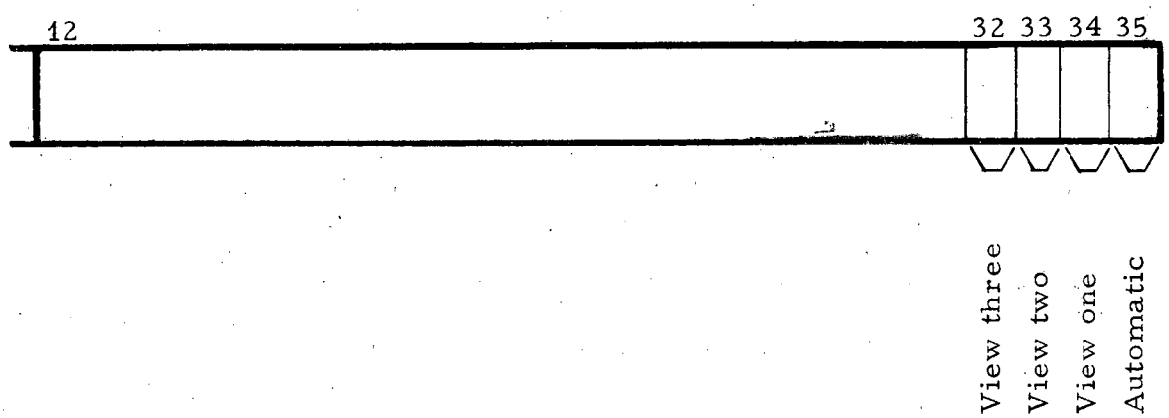

The computer responds by moving the film to the proper view and illuminating the light under the view button that was just pressed.

Any time the auto-manual button is used to return to automatic mode, function code 17 along with bit 35 (labeled "automatic") is sent to the computer, telling the computer to return to automatic control of view selection and film movement.

c. Feedback category

This category covers the three function codes that are automatically fed back to the computer to acknowledge that a computer-commanded operation has been completed.

Function code 10:

The "teletype ready-to-receive" function code is sent back to the computer to signify that the teletype has received a character and completed typing it, and the teletype register is ready to receive another character. (See explanation of the teletype register format.)

Function code 13:

The "stage centered" function code signals the computer that the stage has automatically moved to the null point of the centering microswitches in response to a center-stage command from the computer. (See the explanations of the servo register format, IV B 1a, and function code 14.)

Function code 21:

The "film move finished" function code is the feedback signal to the computer acknowledging that a computer-requested film-move operation has been completed and the film has been positioned and clamped. For a more complete explanation see the description of the film-move register format.

d. Teletype character category

Function code 9:

"Teletype keyboard character" is the only function code that falls in this category. When a teletype keyboard is used to send a character to the computer, the bits of that character are serially loaded into a register at the measuring machine involved. After the register has been loaded, function code 9 is generated and transmitted to the computer along with the eight data bits of the teletype character. These eight data bits are located in the eight least significant bits of the IBM word (i.e., bits 28 through 35).

e. Interlock category

Function code 16:

The "stage-limit" function code is sent to the computer any time a measuring machine's stage is driven into the limit switches. This is an essential alarm during computer-controlled movement of a stage, and is used to terminate that movement. The computer can then drive the stage off the limits, issue a stage-center command followed by resetting the stage scalers, or simply alert the measurer.

3. Special Features at On-Line Measuring Machines

a. Alarm systems

Several noteworthy features have been implemented at various Cobweb measuring machines.

The first of these features is an alarm system using a Sonalert solid-state acoustical device. This is used to alert a measurer under the following circumstances:

(i) The alarm is turned on if the measurer pushes the record button before the coordinates associated with the previous record request have gone into the computer. In this case the first set of coordinates goes into the computer and the second set is lost.

(ii) In the Franckensteins the alarm is sounded if the measurer selects a view that does not correspond to the view that the view-display lights indicate is to be measured and the measurer depresses the record button. No coordinates go to the computer.

(iii) The alarm is also sounded for various conditions in different machines, such as inadequate vacuum at the film clamps and drift problems in the stage encoder circuits.

In all cases the alarm sounds until it is turned off by a push button. The button and the lights that identify the type of problem are located near the alarm.

b. Automatic recording

A second noteworthy feature of the Franckensteins is the generation of automatic record requests if the record button is held down. A valuable feature of the Franckensteins, when they were connected to IBM card puncher, was that successive coordinates could be taken during servo track following by simply holding down the record button. The relatively slow punch provided a convenient length of time for the recording of coordinates. With the Franckensteins on-line to a computer this interval is no longer available, so a method employing distance of stage travel is now used. To implement this, the "or's" of both the up and down encoder pulses from both axes are counted in a unidirectional scaler when the record button is held down. Moreover, when the record button is initially depressed the scaler is reset to zero. It is also reset to zero when it reaches a count specified by a multiposition rotary switch. Each time the scaler passes through zero a record request is generated. The distance between records can vary by as much as $\sqrt{2}$, depending on whether the stage is moving in one axis only or in two axes (the shortest distance between records being when the stage moves at 45 deg to any axis).

c. Pulse height

A third feature, now being experimented with, has been added to Franckenstein MP I-D. We are attempting to use pulse-height information from the track-following detecting head to determine relative track ionization.

The pulse height is changed into a 16-step digital output in an A-to-D converter and sent to the computer whenever a coordinate point is recorded. It is planned to use this information routinely in a manner similar to that on the FSD. The track-sampling slit is 6 μ wide and 600 μ long on the film plane. A track from a minimum-ionizing particle that gives a pulse height about 1/3 as high as that from a completely black track corresponds to the FSD's seeing bubbles on a track about half the time when there are 18 bubbles per mm on film (12 per cm in the bubble chamber).

C. Scan Table Teletype Interface

The "teletype interface" is located in the computer area, next to the Cobweb multiplexer-interface, and constitutes one device on that multiplexer (Fig. 6). The teletype-interface box has been wired to accommodate up to 32 teletypewriters; however, we presently have only six teletypes installed, one at each of six remote scan tables. Additional teletypes can be installed by simply inserting the proper printed-circuit cards (four required per teletype, of which one is only half used), and making the two-wire (simplex) connection to the teletype.

Each teletype is defined by one of 64 available function codes. Communications occur between the teletype interface and the computer under three circumstances: (i) when a teletype transmits a character to the computer, (ii) when the computer transmits a character to a teletype, and (iii) when a teletype has completed the printing of a character received from the computer and a response is sent back to the computer indicating that the teletype is ready to receive a new character. The function code for a particular teletype is the same in all three of these communications.

The formats for the data portion of the computer input and output words are as follows:

(1) Computer output word to teletype interface

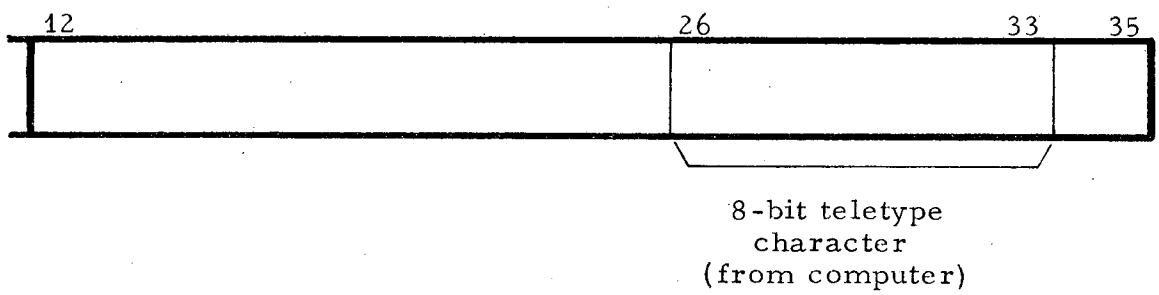

The required "start" and "stop" bits that make up the full 11-bit teletype character are generated in the teletype interface.

(2) Computer input word from teletype interface

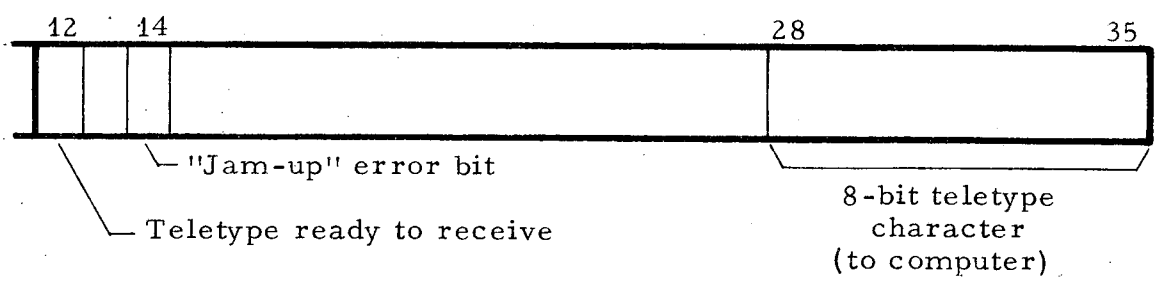

With these input-output formats in mind, one can trace a typical character transmission from the computer to a teletype. The device number, function code, and eight-bit character are sent to the multiplexer, where the block code is decoded and used to send the remainder of the IBM word to the teletype interface. The interface in turn recognizes its device code and accepts the function code and data portions of the word. The function code is then used to select a teletype shift register located in the teletype interface, and the teletype data bits are loaded into that register. A period of time is allowed to elapse equivalent to that required for two teletype stop pulses, then a start pulse is sent to the teletype, followed by serial transmission of the eight data bits. After this has been completed an input word is transmitted back to the computer. The word contains the function code of the teletype to which the character was sent and a "one" in bit 12 (teletype ready to receive) to signify to the computer that the teletype is ready to receive a new character.

To send a character from a teletype to the computer, the teletype character is loaded into the same serial shift register as is used for communication in the other direction. The eight-bit character along with its function code, and the teletype-interface device number, are then sent to the computer.

If for some reason the computer cannot take a character from a teletype register prior to typing of another character at the teletype, the first character remains in the register and a "jam-up" error flip-flop is set. When the computer becomes available, the first character and a "jam-up" indicator (bit 14) are sent.

It should be noted that the teletypes can be operated in full duplex by assigning two function codes, one for computer output and one for input. This of course requires twice the electronics hardware that is used for simplex operation.

V. SOFTWARE DESCRIPTION

A. Control-Point Concept

The Cobweb program is presently able to handle a maximum of 18 machines. From the systems perspective, there are 18 programs (control points) in memory, one per Cobweb machine. In reality, there are just three independent procedures. They are a scanning, a measuring, and an executive procedure. Reentrant coding techniques are extensively utilized to enable a procedure to handle several machines, a procedure working on one machine being considered a control point. Thus the basic systems concept is that there are 18 control points, or programs, to service. This control-point concept is commonly found in multiprogramming and time-sharing operating systems. It is used in the Cobweb system because it enables the software designer to (i) logically separate distinct procedures and machines, (ii) allow a number of operations to take place concurrently, and (iii) add procedures without destroying the open-endedness and structure of the system.

The 18 control points are ordered from 1 to 18, and the value of a common variable, ID, reflects which of the control points currently is using the central processing unit (CPU) of the computer. This variable, ID, is also used by the reentrant procedures to keep track of which machine they are working with at the moment. The CPU scheduling algorithm is a very simple-minded scheme. Each control point in turn, from 1 to 18, gets control of the CPU. When control point 18 releases the CPU to the CPU scheduler, DELAY, control point 1 again assumes control.

The amount of coding in the Cobweb program is nontrivial. Memory space for the program amounts to 28 K words, including storage space for the various data points. Most of the coding is written in the Fortran language.

Using Fortran has been advantageous. As there is no high-speed random-access storage device in the configuration, the multiplicity of machines is handled by increasing eightfold the amount of memory used by certain variables. The usual techniques have also applied to designing reentrant subroutines. There are very few rules that one must follow for successfully coding reentrantly, and programmers have easily adapted themselves to this language.

B. Procedure Switching

When a control point--that is, a scanning or measuring procedure working on a given machine--is using the computer's CPU, it does as much processing as it can. When this control point has no more work to do (is waiting either for an operator at that machine to do something or for a magnetic tape operation to be completed) it relinquishes control of the CPU by calling DELAY. This gives other Cobweb machines an opportunity to be serviced. When DELAY eventually gives control of the

CPU back to this control point, the control point simply proceeds from the point at which DELAY was called. The computer registers preserved for this control point during the waiting period are those normally preserved by any Fortran subroutine.

C. Manual Intervention

At any time during the operation of the Cobweb system, manual intervention may be necessary. The two current reasons are either terminating the entire system or changing the scan cards for events to be measured at some measuring machines. In either case, the mechanics are the same. An operator places a control card in the computer's card reader, and then pushes a sense switch on the IBM 7044 console. The sense switch is sampled by subroutine DELAY after a control point has called it. If the sense switch has been activated, DELAY simply sets a status variable for later examination by some idle control point. That control point then reads the control card and takes the specified action.

D. Initialization

There are several areas of initialization for the Cobweb program. The IBM interrupt system is used to service the usual computer peripheral devices. This interrupt system is modified during initialization so that it no longer handles the data channel to which the Cobweb interface is connected. Some program parameters are initialized by coding. All control points have their beginning locations defined. One then sets the control point ordinal, ID, to the value 1, and transfers to the subroutine that is considered the start of control point 1.

E. Termination

To terminate the Cobweb system, an operator enters a "FINI" control card, using the manual intervention scheme. All 18 control points are stopped. Output tape buffers are emptied, end-of-files are written on the data output tapes, critical tapes are updated and unloaded, and the next scan card to be measured for each measuring machine is listed on the computer printer.

F. Cobweb Interface

The Cobweb interface is treated like any other peripheral device connected to data channel C. Normally, this data channel is reading from the interface to the computer memory. After a burst of data has been input to the computer memory, the data channel logically disconnects from the interface. This data-channel-disconnect condition can be detected under program control. To write from the computer memory to the interface, the program logically connects data channel C to the

interface in a write condition, waits until the write operation is completed, then resets the data channel, and puts it back to reading the interface. Idling the computer while writing to the interface uses less than 50 μsec. This is far less time than processing an interrupt after the write operation is completed.

The handling of the input data from the interface was done for some time via the IBM interrupt system, but the overhead involved was disagreeably perceptible. Until the entire IBM interrupt system is redesigned for both speed and memory space, the input interface data are handled by using a software rather than a hardware interrupt. The overworked CPU scheduler, DELAY, detects that data channel C has disconnected after reading the interface. When this occurs, DELAY calls the master interface interrupt subroutine. This master interrupt routine sequentially examines each input word. Certain functions are handled immediately. These include servo coordinates, teleprinter responses, keyboard characters, and catastrophic-type button pushes. "Record" coordinates are put into the relevant control point's track-point buffer for later processing by that control point. All other input functions are distributed into their relevant control point's circular buffer. Thus high-priority functions are serviced immediately in the interrupt routine, while low-priority functions are separated by machine and then stacked by the interrupt routine for later processing by the proper control point.

G. Standard Computer Peripherals

All standard computer peripherals are serviced by initiating an input-output operation using a Cobweb subroutine, IOPKG, and handling the subsequent "operation complete" interrupt by means of the IBM interrupt system. Each control point has full control over its I-O operations using Fortran coding, and can initiate as many I-O operations as desired and still continue to retain the CPU for computing.

H. Scan-Table System Logic

1. Input

Input to the scanning procedure is via teletype characters and scanning data contained on the adjustable-constants (AJC) tape. The scanner communicates with the scanning procedure via teletype messages.

2. Teletype Procedure

a. Sign-on

To begin scanning, the scanner must "sign on." In the process of signing on, the procedure requests pertinent data concerned with the scanning to follow. For the most part, these data are common to all

scan reports to be done during the scanning session, i. e., experiment number, roll number, etc.

b. Scan report

Once the sign on procedure is complete, any teletype message originating at the scan table is taken as a scan report. A valid scan report--i. e., a teletype message--consists of two portions separated by the solidus character (/). The data contained in each portion of the message are further divided into fields, which are separated by commas. The first half of the message, up to the solidus, contains the frame number of the event and at least two grid positions.

The second half of the message contains event-identifying information, such as a code indicating the event type, to be taken from the scanning data on the AJC tape. In addition it may indicate a range, kink, or electron, or scanner comments. The scanner identifies each field by its first character. For example, "R" identifies range information, "K" indicates a kink, and "C" starts comments. As in the first portion of the message these fields are separated by commas.

c. Sign-off

At the end of his scanning session the scanner follows a sign-off procedure which in effect returns that control point to an idle state.

3. Format Checking

The scanning procedure checks the format of what the scanner has typed. It requires that the teletype message be of the proper form for a scan report. Once the general form is acceptable, specific items are examined, such as roll number and grid positions. These items are checked for content, not accuracy; i. e., roll number must be four numeric characters and grids must be one alphabetic character followed by three numeric characters, and so on.

If the scanning procedure detects an error, it informs the scanner by means of a message on the teletype. Whenever possible the message indicates the field that is in error, such as "FRAME NO. BAD." Any error detected by the scanning procedure negates the report.

4. Output and Scanner's Rejection

When the program has determined that there are no errors, the procedure accepts the scan report i. e., writes it on the data-output tape. At this time the scan report, as interpreted by the procedure, is typed back to the scanner. If the scanner approves the report he proceeds with his scanning. If the scanner does not like the report as typed back to him, he types "REJECT" and the scan report is ignored by CDC 6600 editing program COBEDIT.

The scan report data are written on the data-output tape as a logical record. These scan data are used to make a scan card by the CDC 6600 editing program COBEDIT.

5. Storage Allocation

The scanning procedure is programmed for a multiplicity of 10 teletype-scan tables. This requires a teletype message buffer for each teletype. In addition, a five-word buffer is required for each teletype to hold constants such as roll number and scanner initials. Four 13-word buffers containing the variable scan data are shared by all teletypes.

Up to 10 event types are kept in core at a time. This greatly reduces the number of times it is necessary for the program to read the adjustable-constants tape.

6. Reentrant Rules

The scanning, sign-on, and sign-off procedures are reentrant. As the CPU scheduler DELAY cycles from control point to control point, the CPU is periodically given to a control point consisting of the scanning procedure for a particular scan table. If there is a teletype message, control of the CPU is not relinquished until the control point processes the message and "accepts" the scan report or initiates the typing of an error message.

I. Measuring System

1. Data Flow

a. Machine to computer

As mentioned previously, input data from a measuring machine are first decoded by an interrupt routine. In the measuring procedure, each measuring machine has a track point buffer (holding "record" coordinates) and a circular buffer (holding normal button pushes). Both these buffers are filled by the interrupt routine with input data from that measuring machine. Both buffers are emptied, on a first-in-first-out basis, by a control point which is the measuring procedure for that measuring machine. There are also four status variables per machine, which are used by the measuring procedure. They pertain to whether or not the circular buffer has overflowed, the measurer has typed in a message, a message is currently being typed to the measurer, or the procedure is driving the measuring machine's stage. To determine if there is any work to do, the measuring procedure examines the status variables as well as the circular buffer pointers.

b. Computer to machine

When the measuring procedure is handling one particular machine, it is often necessary to send information (function codes) back to the measuring machine. These function codes include setting the display lights, centering the stage, turning on the track-following hardware, etc. Some functions of sending data to the measuring machines are handled through the interrupt routines. These include servoing and typing a message to the measurer, i.e., closed-loop functions. Although the interrupt routine excutes these functions, the measuring procedure initiates them. In either case, the method of constructing the data word to be sent to the machine is identical. Two table look-ups are used to obtain the proper function code (known by the nature of the operation) and the block-machine code (a function of the control-point variable ID). The constructed data word is then placed in an output buffer for transmission to the Cobweb interface.

2. Input

a. Scan-card input

Scan cards for events to be measured can be inserted into the Cobweb system at any time by using the manual intervention feature. These cards are identified as to format and measuring machine, and whether they are to be added to or to replace the current scan-card backlog. The scan-card images are read in through the computer's card reader, listed on the computer printer, and saved on magnetic tape.

When a measuring machine requires a scan card, the next card for that machine is retrieved from magnetic tape. Each scan card contains such items as numbers of the roll, the frame, the event type, and the experiment.

b. Adjustable-constants input

It has proved advantageous to parameterize both the logic of the program and the tolerances used in various calculations. These parameters, called adjustable constants (AJC), are stored on magnetic tape (see Appendix B) and retrieved, when necessary, by the Cobweb program. The four classes of adjustable constants are machine (defining physical characteristics of the measuring machines), experiment, event type, and scanning. When a scan card is used by the measuring procedure for a particular machine, the experiment and event-type data from the card are used to fetch the appropriate parameters from the AJC tape.

3. Output

Although the data for each measuring machine can be put on separate output tapes, it is more convenient to group all the data on one output tape. Each physical record is self-descriptive and is composed of a number of logical records. A physical record may contain information for

several machines. A logical record is generated when a procedure wants to output some data. This data output tape, called an M44 tape, is edited on the CDC 6600 for the purpose of generating data that are compatible for the various data-analysis systems in use.

J. Peripheral Programs

1. BANG

A diagnostic program (BANG) developed on the IBM 7044 has proved useful to both the engineers and the programmers involved. The subroutines used for the Cobweb interface communication in this diagnostic program are also used by the Cobweb production program.

The program responds to the commands of an operator at the computer console. When the computer is in the read mode, all data read from the interface are printed on the computer printer. The operator can key in any data word and have it continuously sent to the interface. This technique is useful in isolating problems or checking timings with a scope. The operator can select a "sequence" for the diagnostic program to execute. There are three types of sequences that are input to the program via data cards: a set of interface commands (data words), a teletype message, or a set of servo destination coordinates. Each sequence is identified by a unique ordinal (used by the operator for selection) and a Cobweb machine number. When a teletype message or a servo sequence is being executed, an improper response by the hardware causes diagnostic comments and the printing of the erroneous response.

2. Adjustable Constants Generator Program

The adjustable-constants magnetic tape (AJC) is generated by a separate IBM 7044 program using data card input. Thus a physicist can alter or add experiment or event-type parameters by simply changing a data card. This gives the physicist much quicker response than having a programmer modify a production system. Appendix B describes this system in greater detail.

3. Data-Tape Merge Program (COBVAL)

COBVAL is a program written for the CDC 6600 that reads Cobweb data-output tapes. The purpose of this program is to determine on a daily basis the readability of data-output tapes written by Cobweb. In addition to this function, the program transfers the daily data tapes to a "weekly" tape so that one week's data are contained on a single reel of magnetic tape.

The program also provides statistics as to the number of events measured by a device and by a measurer.

4. Data-Editing Program (COBEDIT)

COBEDIT is a program written for the CDC 6600 that "edits" the Cobweb data-output tapes. Since Cobweb outputs all data and indicates erroneous or bad data by means of reset records, COBEDIT'S job is to separate the good from the bad and produce event data suitable for further processing by the various data-analysis systems.

Through data cards the user specifies which experiments he wishes to "edit" and the desired output format. A resultant output tape (see Appendix C) for an experiment may be in one of three formats: PANAL tape format for processing in the SIOUX system, MCI format for processing in the FOG system, or STA tape for the FSD system. The user may also specify whether or not the program should punch scan cards from the scanner's reports given on the input tape.

COBEDIT also writes a log tape (see Appendix D), which is used to derive such statistics as table utilization and measurer speed; additionally it carries information about all measurements that can be used for checks on measurement accuracy etc.

VI. PHYSICS CHECKS

See adjustable-constants tape description in Appendix B for a listing of kinds of checks not described here.

A. Track

Each track in each view is fitted with a single parabola if the angle through which the track bends is less than 60 deg. Between 60 and 90 deg the track is split into two overlapping pieces (about 2/3 track length each) and each is separately checked. Tracks turning more than 90 deg are normally rejected, but the measurer may accept them if he is so instructed. The rms deviation of the measured points from the fitted curve must be not more than 10 μ on film for the beam track, 15 μ for outgoing prongs, or 40 μ for tracks stopping in the chamber for which range rather than curvature is to be used to determine momentum. Up to 48 points may be taken on each track.

As was mentioned in the introduction, some three-view reconstruction errors still occur after single-view track fitting, due to operator interchange of the order of measurement of tracks in different views. This is easily cured for outgoing tracks by a "track match" program. Mismeasures of the beam track are more difficult to detect and cannot be cured by the reconstruction or Track-match programs at a later date. In three-view reconstruction the points on the beam tracks have a distribution of standard deviations peaking at 5 to 6 μ, and tailing off at about 16 μ, with occasional very large values even though the cutoff is 10 μ in each view independently. We find that events with large errors on beam tracks do not make 4-C fits in the same proportion as good measures. In the large majority of these cases there is considerable confusion of beam tracks near the event in question. Thus some three-view reconstruction on-line may be necessary to pick up these possible errors.

B. Vertex

The vertex is taken to be a corresponding point in all three views. A basic reconstruction program without distortion corrections transforms the coordinates of the vertex with respect to the fiducials in each view into the camera coordinates system for checking, and back onto the film to aid the computer to drive the stage to the origin more accurately in the second and third measured views. The check requires that the perpendicular distances of the vertex to the line between cameras be equal within 150 μ, and that the separation of the vertices in different pairs of views be proportional to the camera spacing.

VII. FUTURE PLANS

A. Program Development

In the area of program development three significant efforts are in progress.

1. Executive Control Point

There are plans to extend the functions performed by the executive control point. These functions could include such utility operations as card to tape, tape to card, card to printer, etc. It is felt that such operations will not degrade the performance of Cobweb.

2. Track Matching

The problem of track matching is to be studied and included as a further physics check in the measuring procedure. At first only the sign of curvature will be checked, and detailed matching will be left to the FOG reconstruction program. Preliminary studies will be made on the CDC 6600, and the techniques developed will then be incorporated in Cobweb.

3. Disk

With the arrival and inclusion of a disk in the computer configuration, many possibilities come to mind--program segmentation, intermediate storage of data and elimination of tape manipulations. Whichever avenues are taken, computer memory will be better utilized. This flexibility will permit more physics to be added to the system; also, three-view reconstruction to detect errors in beam tracks can be implemented. Additionally, some physics checks are anticipated, such as the line of flight of vee decays.

B. Hardware: Disk Interface

A 6.4-millions-bit disk has been purchased and will be connected to another direct data channel of the IBM 7044.

VIII. CONCLUSION

The advantages of an on-line system have exceeded our most optimistic estimates. We had predicted a factor-of-2 or factor-of-3 increase in measuring rates, but have actually attained a factor-of-4 improvement. Probably the three most important agents contributing to the increased measuring rates are computer-controlled stage motion, automatic film motion, and psychological effect on the operators, who, knowing that the measurements will be checked in real time, can go just as fast as they please. Any perceptible delays completely negate this smooth operation. An interesting corollary, noticed also by other groups, is that the operators push the measurements to the limit of the tolerances set up.

ACKNOWLEDGMENTS

In Memoriam

Arthur W. Barnes did not live to see the completion of this project. However, his capable engineering, enthusiasm, and experience in the design and development of data-reduction equipment is reflected in the successful completion of the Cobweb system. We have indeed missed him.

We are indebted to the many physics and engineering groups with whom we conferred prior to initiating this system for giving us the benefit of their prior experience.[5]

Our special thanks go to all of the talented people in Jack Franck's Special Projects group, for their work on implementing the hardware. We also express our appreciation to Ed McGhee, IBM customer engineer, for capable assistance in connecting our equipment to the IBM 7044.

We are especially indebted to Charlotte Scales and John Visser, who have made the system operate smoothly on a day-to-day basis. Last, but by no means least, our thanks go to the scanners and measurers, who submitted gracefully to and cooperated completely with this form of automation, and contributed invaluable ideas and comments.

FOOTNOTE AND REFERENCES

*This work was done under auspices of the U. S. Atomic Energy Commission.

1. Eugene P. Binnall and Myron H. Myers, Cobweb: IBM 7044 On-Line Bubble Chamber Film Measuring Machines, UCRL-17136, Sept. 19, 1966.

2. Margaret Alston, Jack V. Franck, and Leroy T. Kerth, Conventional and Semiautomatic Data Processing and Interpretation, in Bubble and Spark Chambers, Vol. 2 (Academic Press, Inc., New York, 1967.

3. P. Wes Weber, A Proposal for the Addition of Scan Tables to the Cobweb System (unpublished Powell-Birge Physics Memo PB-120, 1968).

4. P. Wes Weber, A Proposal for a Computer-Controlled Data Reduction System (unpublished report, LRL Berkeley, Powell-Birge Physics, 1965).

5. Purdue Conference on Instrumentation for High Energy Physics, Purdue University, Lafayette, Indiana, May 12-14, 1965, IEEE Trans. Nucl. Sci. NS-12 [4], Aug. 1965.

COBWEB NOTES

APPENDIX A

Memo No:	Date:	Revised:
COBWEB 2	10/12/67	12/11/67
		2/26/68

OPERATING PROCEDURE FOR THE C O B W E B MEASURING PROGRAM

I. NORMAL START

1. The IBM 7044 must always be cold started by Math and Computing, regardless of the present computer condition.

   Please follow these steps:

   a. Press CLEAR and RESET buttons on the 7044 console.
   b. Clean all tape unit heads -- particularly channel "B".
   c. The following tapes should be mounted:

      B1 = TVGP 6.1 system tape.
      B2 = SCRATCH (but use a good blank).
      B3 = COBWEB restart scan tape.
      B5 = COBWEB (pre-labeled) blank M44 output tape.
      B6 = COBWEB AJC Constants tape.
      C1 = SCRATCH.
      C2 = SCRATCH.
      C3 = COBWEB System reload tape.

   d. Place the COBWEB reload cards (4), not followed by scan cards, into the IBM card reader -- 9-edge in, face down.
   e. Ready the card reader by pressing two buttons on the face of the card reader: END OF FILE (yellow) and START (green).
   f. Ready the card punch by pressing it's START button.
   g. Put in sense switches 2 and 6.
   h. Enter in the keys: +076200002221 -- and press the LOAD button.
   i. Release sense switch 6 when the typewriter, at the console, replies with "7044 AT YOUR SERVICE, MASTER".
   j. Now set the keys to the on-line mode: 111000000003 -- press START.
   k. Enter the date in octal (MMDDYY): 10/09/68 = 010000110610.
   l. Enter time the same way: 1332:00 = 010303020000.
   m. The typewriter should reply: "TIME WAS SET TO 133200". If this time agrees with the wall clock, enter: -30000000000 -- press START. (If not, correct your time -- press START -- get a reply, etc.)
   n. Log in (punch in) a COBWEB time card.

2. Ready the card reader and the card punch. The 7044 will automatically read the cards and pause. The typewriter will have the message: "MOUNT RELOAD ON C3, AJC CONSTANTS ON B6. (TURN RUNNING LITES ON)".

3. If C3 and B6 are ready, press START. The COBWEB System will now be loaded. (Note that the channel "C" select light will stay on.)

4. Put the scan card deck into the card reader and ready. Depress and release, sense switch 1 and hit carriage space. The scan cards will now be read in (see scan card decks).

5. Turn on the (green 2nd floor lights) COBWEB Porduction lights.

6. That's about it! ... Thank you for your help!

II. NORMAL END OF RUN

1. Contact the Math and Computing Shift Supervisor. Ask him to end the COBWEB run.

2. The following steps will end COBWEB successfully:

   a. Place one card (the FINI card) into the card reader.
   b. Depress and release sense switch 1.
   c. Hit CARRIAGE SPACE on the printer.
   d. Watch for the following to happen:

      (1) The 1403 printer will produce a table of the NEXT SCAN CARDS to measure for each of eight measuring machines. (Please see example below.) This printout is needed for successful restart. Please save it in the slot shown on the COBWEB SETUP diagram.

```
MACHINE    NEXT SCAN CARD.

MICROE     40630302E221K215K215     430222410705705011TCC SHORT SIGMA
MP1C         2009058002                 22N265N266107048        91RN
MP1E         0803075202                  1J173J105              75TC
000000     MORE SCAN CARDS NEEDED.
000000     MORE SCAN CARDS NEEDED.
000000     MORE SCAN CARDS NEEDED.
000000     MORE SCAN CARDS NEEDED.
```

      (2) These tapes will unload: B3, B5, and B6.
      (3) The program stop light will come on.

   e. The tapes should now be placed on the bottom shelf of the tape rack shown in the setup diagram. File protect the B5 and B6. Leave the ring in on the B3 (the Restart Scan Tape).

   f. If there are still scan cards in the card reader stacker, put them in the drawer marked "Scan Cards In-Use".

   g. Please note that since COBWEB is no longer in production, the COBWEB Production lights should be turned off. (The switch is on the face of the LRL INTERFACE -- see the diagram).

   h. Log out the COBWEB time card -- and COBWEB is ended!!

   i. Thank you.

III. RECOVERY (AFTER AN ABNORMAL STOP)

1. A Math and Computing Operator needs to do the following:

   a. Put several end-of file marks on the B5 (M44 tape), and rewind and unload.

   b. The ring should be pulled and the M44 tape placed in the over-night slot on the bottom shelf of the tape rack.

   c. Manually rewind: B1, B2, B3, B6, C1, C2, and C3.

   d. Clean the B5 tape head.

   e. Get one of the pre-labed COBWEB blanks from the tape rack and mount it on B5. Also, please write the time and date on the label of the B5.

   f. Cold start as per write up (NORMAL START).

2. A Data Reductions Analyst needs to set up the scan card deck. (Since the Abnormal Stop prevented the proper termination of the Restart scan tape it is now useless as a restart tape).

   During normal working hours, one should call extension 5367.

   During the Swing and Mid shifts, an Electronic Maintenance man should call one of the following Data Reductions people:

   Charlotte Scales - 848-8843

   Carol Tuttle - 843-1220

3. If recovery cannot be made after the above, have the Electronic Maintenance man call John Visser, 526-3615 or Wes Weber, 799-2922.

IV. SCAN CARD DECK

1. The scan card deck must be assembled only by a COBWEB Operations Data Reduction person. (Refer to the examples of scan card deck setup illustrated on the next page). Once the decision of what deck setup to use is made, the deck can be readied in the IBM card reader.

2. Check the order of the headers: MICROE, MP1C, MP1E, MP1D, (This is the header order if each is used).

3. Check to see that the last card is END.

4. Note that if there are no scan cards for a particular machine, there is no need to include a header card for that machine -- however, the headers must still be in the above order.

5. When the cards are readied in the card reader, depress and release sense switch 1. At the 1403 printer, hit the CARRIAGE SPACE button. The cards should now begin to be read and printed on the printer.

6. Watch the printer as the cards are being read for error comments. The cards in error can be corrected and the entire batch put in again, but this should be done only by a trained Data Reduction person.

7. When the END card has been read and printed, go to the console typewriter. There should be one of two messages:

   a. "SCAN CARDS FINE.THANK YOU." -- means that you are finished on the 1st floor. One should, however, separate and deliver the appropriate scan card lists (just printed successfully) to the right measuring machine on the 2nd floor.

   b. "FIX SCAN CARD ERRORS -- RERUN THIS ENTIRE BATCH OF CARDS" -- means that there is scan card trouble. None of the cards were accepted by COBWEB! Examine the printout carefully.

      (1) "SCAN CARD ERROR" means that some critical field on that particular scan card is either missing or is obviously incorrect.

      (2) "CARD READER ERROR" means that the IBM card reader could not read the scan card. Probably illegal punches, offset punching, or a defective card reader condition.

V.

EXAMPLES:

SCAN CARD DECK SET UPS

A. TAPE (Requires a B3 restart scan tape -- saved over from
END the last normal stop of COBWEB)

B. TAPE (Also requires a B3 restart scan tape.)
MICROE,PB,ADD (Adds to the end of MICROE's existing scan cards on B3)

•
•
•

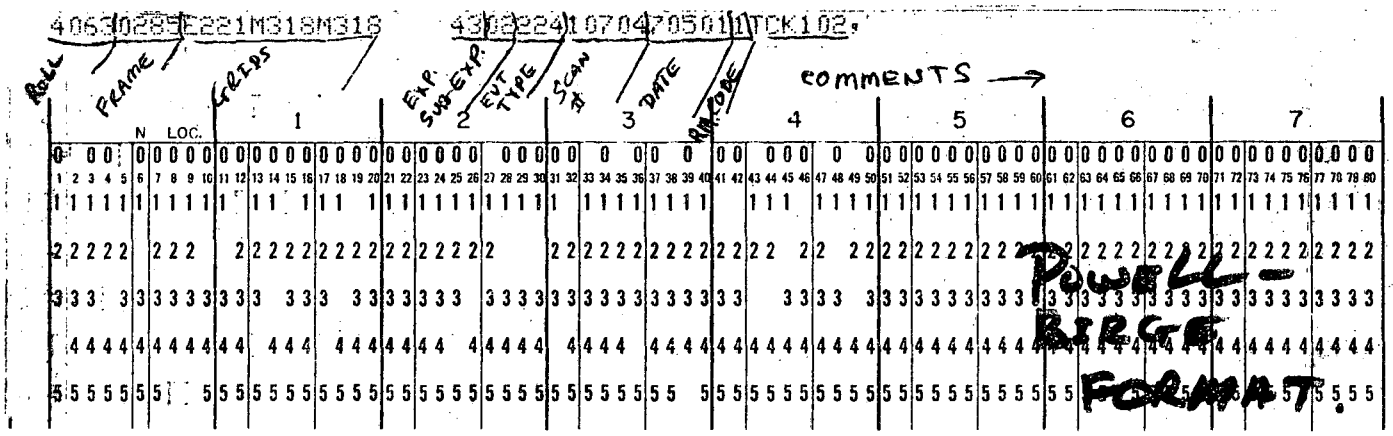

MP1C,PB,REPLACE (Replaces the entire scan card file for MP1C on the B3)

•
•
•

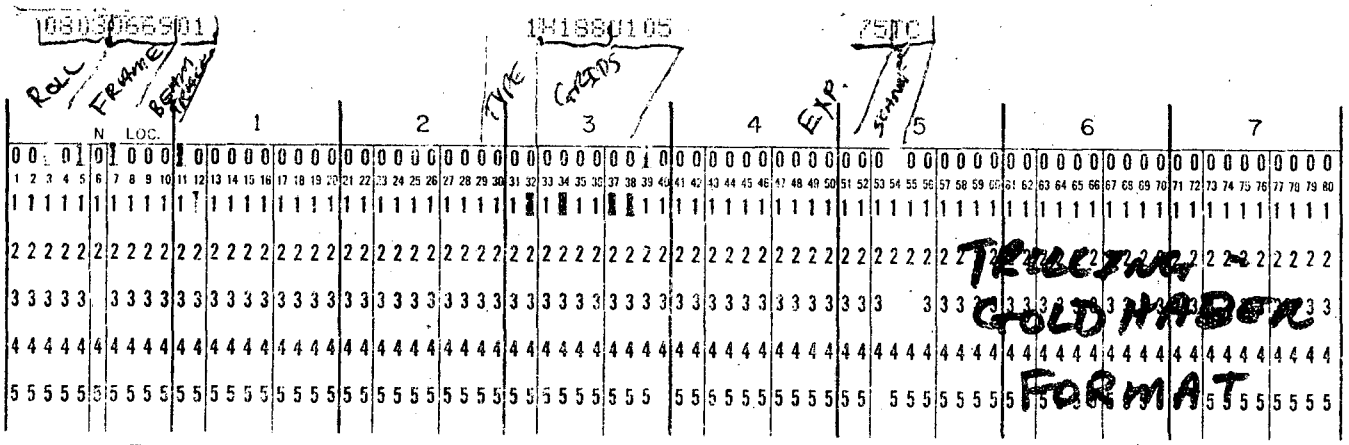

END

C. MICROE,PB,REPLACE (B3 may be any good blank tape)
•
•
•
** MP1C,PB,REPLACE ** Note that the order of headers must be like this!
MP1E,TG,REPLACE
MP1D,PB,REPLACE
END

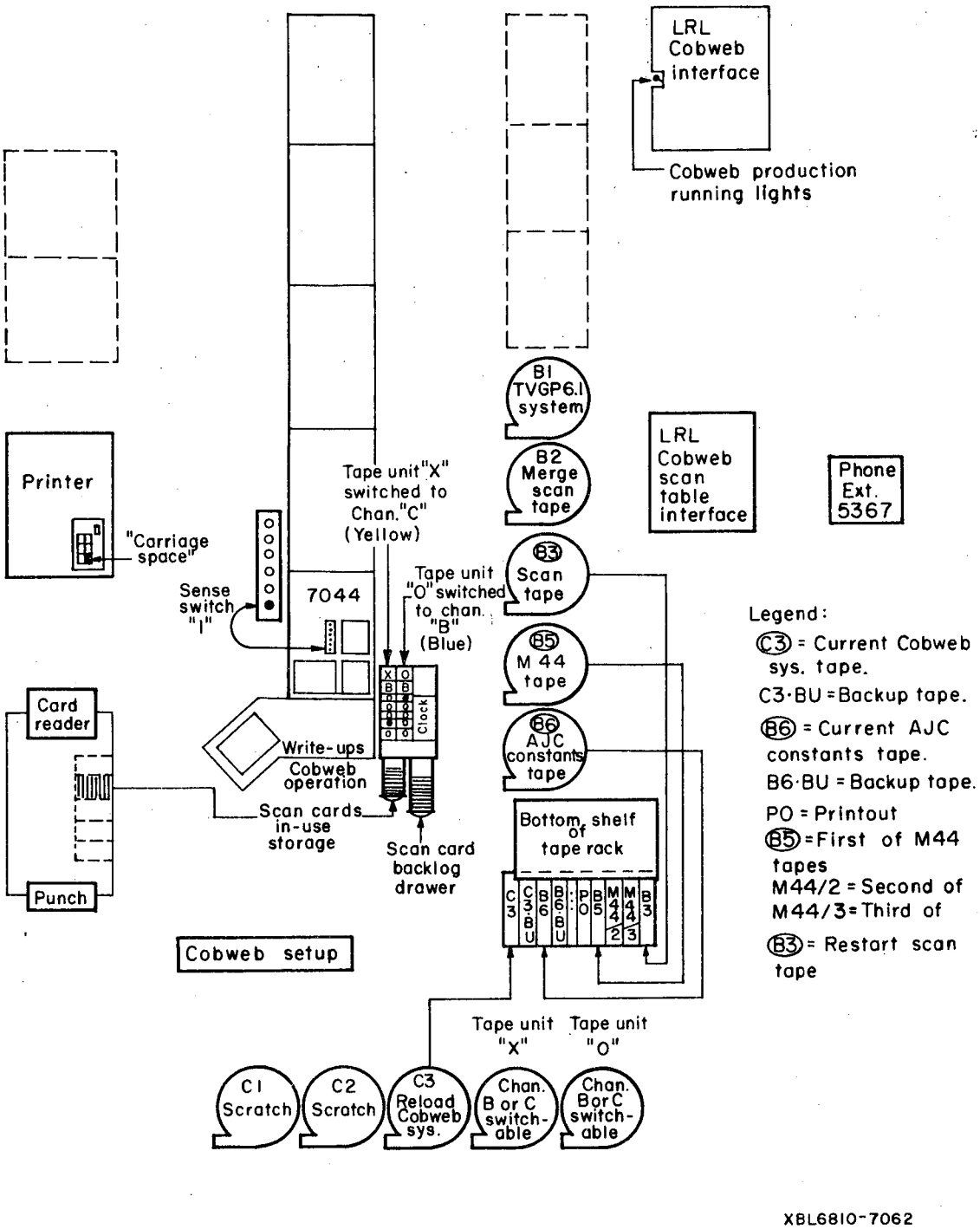

Fig. 8. Cobweb setup.

APPENDIX B

SUBJECT: Cobweb Adjustable Constants

Memo No.: COBWEB 6 | Date: 7/2/68 | Revised: 9/23/68

Name: Myron Myers

Adjustable constants define parameters which may vary because of different measuring machines, bubble chambers, experiments, and/or event types. The adjustable constants are prepared on IBM cards, they are processed thru an AJC 7044 program to generate an "AJC Constants" magnetic tape. This tape is used as input by the COBWEB program.

Appendix I is a glossary of AJC control card field phrases. (Page 4)

Appendix II describes the mechanics of writing control cards. (Page 8)

There are four distinct areas to which adjustable constants apply:

A. Measuring machine
B. Experiment
C. Event type
D. Scanning

A. Measuring machine (6 fields) card

Field

1. DEVICE
2. Measuring machine name
3. Rough servo tolerance
4. Fine servo tolerance
5. Fiducial measuring mode
6. Computer controlled film handling

B. Experiment

There are eight different AJC card types to be prepared for any given experiment. All cards for one experiment must be grouped together. The EXP1 card must be first. The other cards for a given experiment can be in any order. The AJC experiment cards are:

1. EXP1 - Miscellaneous parameters - must be the first card
2. EXP2 - Servo corrections
3. FIDVW3 - Film plane fiducial locations in view 3
4. FIDVW2 - Film plane fiducial locations in view 2
5. FIDVW1 - Film plane fiducial locations in view 1
6. CAMSPA - Space coordinates of cameras and fiducials
7. TRACK - Track fitting parameters
8. FILM - Film format definitions

EXP1 card (10 fields)

Field

1. EXP1
2. Experiment number
3. Bubble chamber
4. Fiducial set
5. Number of fiducials to measure in each view
6. Fiducial referenced by the scan card grids
7. Grid position of this reference fiducial
8. Grid box size
9. Fiducial distance tolerance
10. Vertex remeasurement tolerance

EXP2 card (8 fields)

Field

1. EXP2
2. Experiment number
3. X } View 3 servo correction for the production vertex
4. Y
5. X } View 2 servo correction for the production vertex
6. Y
7. X } View 1 servo correction for the production vertex
8. Y

FIDVW3, FIDVW2, FIDVW1 cards (6-8 fields)

Field

1. FIDVW (i)
2. Experiment number
3. X } First fiducial to measure
4. Y
5. X } Second fiducial to measure
6. Y
7. X } Third fiducial to measure (if any)
8. Y

CAMSPA card (15 fields)

Field

1. CAMSPA
2. Experiment number
3. Corresponding point tolerance
4. Depth tolerance
5. Analysis system of space coordinates
6. X } Space coordinates of view 3 camera
7. Y
8. X } Space coordinates of view 2 camera
9. Y
10. X } Space coordinates of view 1 camera
11. Y
12. X } Space coordinates of first measured fiducial
13. Y
14. X } Space coordinates of second measured fiducial
15. Y

TRACK card (9 fields)

1. TRACK
2. Experiment number
3. Number of allowable rejected points
4. Points too close tolerance
5. Normal track } σ tolerance
6. Beam track
7. Range track
8. Standard deviations point check
9. Minimum point check tolerance

FILM card (5 fields)

Field

1. FILM
2. Experiment number
3. No. of views between frames
4. No. of views from view 3 to view 2 of one frame
5. No. of views from view 2 to view 1 of one frame

End of experiment cards.

C. Event type card (5-18 fields)

1. EVENT
2. Event type name
3. Number of vertices (N)
4. Number of tracks } vertex 1
5. First measured track number }

.
.
.

2*J+ 2. Number of tracks } vertex J
2*J+ 3. First measured track number }

.
.
.

2*N+ 4. Connecting track

D. Scanning card (3-18 fields)

1. SCAN
2. Experiment number
3. $SSAAAA_1$
4. $SSAAAA_2$

.
.
.
.
.
.
.

18. $SSAAAA_{16}$

Appendix I
Glossary

A. Measuring machine

Card type-field number

DEVICE-2
MEASURING MACHINE NAME - A symbolic name such as "MP1C" or "MP1E". (A format).

DEVICE-3
ROUGH SERVO TOLERANCE - When the computer is driving the measuring machine's stage, the minimum distance from the final destination at which the "fast speed" of the stage servo is to be used. (Integer format).

DEVICE-4
FINE SERVO TOLERANCE - When the computer is driving the measuring machine's stage, the maximum distance from the final destination at which the stage is to be stopped. (When the distance from the final destination is between the "rough and fine servo tolerances", the stage servo is driven at "slow speed"). (Integer format).

DEVICE-5
FIDUCIAL MEASURING MODE - If all fiducials are to be measured in a single view before proceeding to the next view, use the word SINGLE in this card field. If a fiducial is to be measured in all views before proceeding to the next fiducial, use the word MULTI in this card field. (A format)

DEVICE-6
COMPUTER CONTROLLED FILM HANDLING - A measuring machine may have the capability of having the computer move film from view to view and from frame to frame. If this ability exists for this measuring machine, use the work FILM in this field of the DEVICE card. If the film handling is not computer controlled, use the word NOFILM in this field. (A format)

B. Experiment

EXP1-2
EXPERIMENT NUMBER - A two digit experiment number (Integer format)

EXP1-3
BUBBLE CHAMBER - A two digit bubble chamber number such as 72 or 25. (Integer format)

EXP1-4
FIDUCIAL SET - A one digit number used in the FOG system. Experiments which don't use FOG can put a "9" in this card field. (Integer format)

EXP1-5
NUMBER OF FIDUCIALS TO MEASURE IN EACH VIEW - self-explanatory. (Integer field)

EXP1-6
FIDUCIAL REFERENCED BY THE SCAN CARD GRIDS - One of the fiducials to measure will normally be used, together with the grids of this fiducial and the production vertex, to aid the measurer in finding the event. This card field should be a "1", "2", or "3" as this grid reference fiducial is the first, second, or third fiducial to measure in any view. (Integer format)

EXP1-7

GRID POSITION OF THIS REFERENCE FIDUCIAL - The Powell-Birge Group specifies the grid of the reference fiducial on the scan card. Thus this field is not used by that group, but still must have some dummy grid, such as A222. The Trilling-Goldhaber Group uses this card field. The word to use is the grid, e.g. A22, and the subgrid, e.g. 2, to make up e.g. A222. (A format)

EXP1-8

GRID BOX SIZE - The length of a side of a grid box, such as A22, expressed in units of microns. (Integer format)

EXP1-9

FIDUCIAL DISTANCE TOLERANCE - The distance between measured fiducials in any view is checked. The card field defines the maximum allowable difference from the norm expressed in microns. (Integer format)

EXP1-10

VERTEX REMEASUREMENT TOLERANCE - When COBWEB fails a track, the vertex must be remeasured to insure that the scalars haven't slipped. This card field defines the maximum allowable difference (microns) in either "X" or in "Y" between the original vertex measurement and this remeasurement. (Integer format)

EXP2-3

VIEW X SERVO CORRECTION FOR THE PRODUCTION VERTEX - This field is used only to aid the computer in driving the stage to a vertex in any view before the vertex has been measured in that view. (Integer format)

FIDVW(i)-3

X, Y I TH FIDUCIAL TO MEASURE - Approximate location of the stage where this fiducial is located when the film is changed normally. These values are in the film plane in units of microns and are used as the constants in the "fiducial distance" check. (OCTAL format)

CAMSPA - A check is made on each vertex to be sure the same vertex was measured in all three views. The "corresponding point" is the coordinate of a vertex along a camera axis system, where the coordinate should be identical when measured by both cameras defining the camera axis. The "depth" is effectively the other orthogonal coordinate of the vertex in such a camera axis system.

CAMSPA-3

CORRESPONDING POINT TOLERANCE - When comparing the "corresponding point" coordinates, in a camera system of a vertex measured in two views, the maximum deviation allowed. (cms.) (Floating format).

CAMSPA-4

DEPTH TOLERANCE - When comparing the "depth" coordinate of a vertex in view i against the "depth" coordinate of a vertex in view j, the coordinate system being that of the camera i and j axis, the "depth tolerance" is the maximum allowable difference between these two "depth" coordinates (cms.) (Floating format)

CAMSPA-5

ANALYSIS SYSTEM OF SPACE COORDINATES - The name of the analysis system from which the space coordinates derive, FOG or TVGP. (A format).

CAMSPA-6

SPACE COORDINATES OF VIEW I CAMERA - The X, Y coordinates of each camera in space are needed, specified in units of cms. (Floating format). (Note-the space coordinate system must be the same as that of measured fiducials also specified on this control card).

CAMSPA-12

SPACE COORDINATES OF J th MEASURED FIDUCIAL - The X, Y coordinates of each of the first two measured fiducials in space are to be defined in units of cms. (Note-the space coordinate system must be the same as that of the cameras defined on this control card). (Floating format)

TRACK-3

NUMBER OF ALLOWABLE REJECTED POINTS - In checking the points of a measured track, a point may be rejected for one of several reasons. This parameter defines the maximum number of points to be rejected without having the whole track rejected. (Integer format)

TRACK-4

POINTS TOO CLOSE TOLERANCE - Defines the minimum allowable distance between adjacent track points in units of microns. (integer format).

TRACK-5

NORMAL, BEAM, RANGE TRACK σ TOLERANCE - Define the maximum allowable R.M.S. deviation in the parabolic fit to a measured track. (Integer format)

TRACK-8

STANDARD DEVIATIONS POINT CHECK - N, where a track point is rejected unless it is less than $N*\sigma$ units from the fitted parabola. (Integer format)

TRACK-9

MINIMUM POINT CHECK TOLERANCE - T, where the deviation of each track point from the fitted curve is compared against the greater of T and $N*\sigma$. Microns (Integer format).

FILM-3

NO. OF VIEWS BETWEEN FRAMES - The number of adjacent views from view 3 of frame "i" to view 3 of the next frame, "i + 1". (Integer format)

FILM-4

NO. OF VIEWS FROM VIEW 3 TO VIEW 2 OF ONE FRAME - The number of adjacent views from "view 3, frame i" to "view 2, frame i". (Integer format)

FILM-5

NO. OF VIEWS FROM VIEW 2 TO VIEW 1 OF ONE FRAME - The number of adjacent views from "view 2, frame i" to "view 1, frame i". (Integer format).

C. Event Type

EVENT-2

EVENT TYPE NAME - Used to identify the configuration of the event to measure. The Powell-Birge Group uses the experiment and subexperiment numbers, e.g. 3417. The Trilling-Goldhaber Group uses their actual event type name, e.g. 0027. (A format)

EVENT-3

NUMBER OF VERTICES - The number of vertices to measure for this event type. (Integer format)

EVENT-4

NUMBER OF TRACKS FOR VERTEX J - Total number of tracks to measure at this vertex. (Integer format)

EVENT-5

FIRST MEASURED TRACK NUMBER - The track number of the first track to measure at this vertex. The track numbers associated with a vertex increase monotonically by one. (Integer format)

EVENT-2*N + 4

CONNECTING TRACK - The Alvarez Group nomenclature is used in specifying connecting track information. A beam track numbered 7 would be labeled 0107 whereas a track numbered 7 which goes from vertex 1 to vertex 2 would be labeled 1207. There are two different modes of using connecting track data. The first mode simply uses the end point of the track as vertex point for another vertex. To measure track 7 connecting vertices 1 and 2 just once, put a V1207 in this field. Define tracks 7 in the event type for vertex 1 <u>only</u>. The end point of track 7 will be used as the measured vertex 2 position. The second mode, which includes the first mode, also is used to output the measured points of a track as two tracks, each associated with a different vertex. To measure a track as track 7 from vertex 1 to vertex 2 and as track 0 from vertex 2 to vertex 1, put a D1207 in this field. Define track 7 in the event type for vertex 1, but <u>do not</u> define track 0 in vertex 2.

D. Scanning card (used by teletype scan tables).

SCAN-3 thru 18

$SSAAAA_N$ - for a given experiment number the sub experiment number and assignment list which will be used when the scanner types "N" (integer) following the / (delimiter) of a scan report.

Appendix II: AJC Control Card Mechanics

A. The data is punched in a physical card starting in Column 1 and not exceeding column 72.

B. Any two adjacent fields are separated by a single comma.

C. No imbedded blanks should be within any field.

D. The last field on a card should not have a comma following it.

E. If the data for some AJC card type will not fit on one card, punch the data from Column 1 thru Column 72 on the first card together with any nonblank character in Column 80. Then continue the data on the second card starting in Column 1.

The following example illustrates the mechanics:

Card 1

```
CAMSPA,75,.2250,.2250,TVGP,24.5190,25.0944,25.1040,-24.7502,-24.7545,-25      A
.2965,.023,-17.587,-.022,17.780
```

Card 2

APPENDIX C

44 Data Output Tape

Logical Record Identification	Contents - words		Format
Measurer Identification ("sign-on")	1	- "1", number of words	2I3
	2	- Measuring Machine #	I
	3	- Date (MMDDYY)	A6
	4,5	- Time (bHH6MM.MMbbb)	A12
	6	- Measurer initials, Physics group #	A3,2X,A1
Event Identification (automatic)	1	- "2", Number of words	2I3
	2	- Measuring Machine #	I
	3	Date	A6
	4,5	Time	A12
	6-19	Scan card	14A6
	20-22	Event type (internal representation)	3A6
Fiducial Data	1	- "3", Number of words	2I3
	2	- Measuring Machine #	I
	3	- Fid. set #, view #, number of fid. in view	3X,3I
	4	- X coord. Fid 1	I
	5	- Y coord. Fid 1	I
	6	Ioniz. Fid X	I
	7	X Coord. Fid 2	I
	8	Y Coord. Fid 2	I
	9	Ioniz. Fid 2	I
	10	X Coord. Fid. 3	I
	11	Y Coord Fid 3	I
	12	Ioniz. Fid 3	I
	13	- $d(F_1-F_2)$	I
	14	- $d(F_1-F_3)$	I
	15	- $d(F_2-F_3)$	I
Measurer's Comments	1	- "4", Number of words	2I3
	2	- Measuring Machine #	I
	3	- Number of characters of comments	I
	4-15	- 72 characters of comments (blank fill)	12A6

44 Data Output Tape

Logical Record Identification	Contents - words		Format
Track Data (automatic)	1	- "5", Number of words	2I3
	2	- Measuring Machine #	I
	3	- # of coord pairs track #, view #, vertex #	2I2, 2A1
	4	- range, accept, ignore, track check code :If "off" = 0 otherwise "on"	4A1, 2X
	5	- Sigma X 100	I
	6-155	- by triplets, Y & X(P.B)coord, then IONIZ. Up to 50 triplets	I
Track Reset	1	- "6", Number of words	2I3
	2	- Measuring Machine #	I
	3	- Track indication (=1), Track #, View #, Vertex #	1X,I1,I2,2I1
View Reset	1	- "7", Number of words	2I3
	2	- Measuring Machine #	I
	3	- view #, key key=1, reset measurement data & fiducial data. =2, reset only measurement data	4X, 2I1
Event Reset	1	- "8", Number of words	2I3
	2	- Measuring Machine #	I
	3	- Date	A6
	4,5	- Time	A12
	6	- Reset code: 0 - operator initiated 1 - computer initiated	5X, I1

44 Data Output Tape

Logical Record Identification	Contents - words		Format
Miscellaneous Log	1	- "9", Number of words	2I3
	2	- Measuring Machine #	I
	3	- Track #, view #, vertex#	2X,I2,2I1
	4	- error code, type log Type log =1, computer initiated fiducial reset =2, computer initiated track reset =3, fiducials were incorrect at end of view error code = view no. if fids. fail	4X,2I1
Event Complete log	1	- "10", Number of words	2I3
	2	- Measuring machine #	I
	3	- Date	A6
	4,5	- Time	A12
Operator "sign-off" log	1	- "11", Number of words	2I3
	2	- Measuring machine #	I
	3	- Date	A6
	4	- Time	A12
Maintenance "sign-on" log	1	- "12", Number of words	(2I3)
	2	- Measuring Machine #	I
	3	- Date	A6
	4,5	- Time	A12
	6-17	- Comments (code in comment char. 1 & 2)	12A6
Maintenance "sign-off" log	1	- "13", number of words	2I3
	2	- Measuring machine #	I
	3	- Date	A6
	4-5	- Time	A12
	6-17	- Comments	12A6
Event Reject	1	- "14", Number of words	2I3
	2	- Measuring Machine #	I
	3	- Date	A6
	4,5	- Time	A12
	6	- Number of character of comments	I
	7-18	- Comments	12A6

44 Data Output Tape

Logical Record Identification	Contents - words		Format
Scan Report	1	- "15", number of words	2I3
	2	- Measuring Mach. #	I
	3	- Scanner's initials	A2
	4	- Experiment number	A2
	5	- Roll number	A4
	6	- Frame number	A4
	7	- Sub-exp. number & assignment list	A6
	8-11	- 4 grid positions	4A4
	12-16	- 5 words of comment portion of scan card	5A6
	17	- scan card number	A5
	18	- scan date	A5
	19	- type of scan 0 - First scan 1 - check scan	I1

Cobweb Log Tape: Format Description

A. Event Data
1. Group number
2. Machine number
3. Experiment, subexperiment
4. Roll number
5. Frame number
6. Scan-card number
7. Measurer's initials
8. Scanner's initials
9. Scan date
10. Measure date
11. Time on
12. Time off
13. Delta time
14. Event-reject code
15. Distance between fiducials
16. Number of vertices
17. Number of tracks
18. Track type (characteristic)
19. Track-check code
20. Sigma × 100 (track fit)
21. Number of points
22. Comments

B. Measure Data
1. Number of events completed
2. X Coordinate
3. Y Coordinate

C. Maintenance Data
1. Maintenance code
2. Maintenance comments
3. Maintenance man's initials
4. Time between operator's sign-off and maintenance man's sign-on
5. Time between maintenance man's sign-off and operator's sign-on
6. Delta time maintenance

D. Reset Data
1. Reset code

E. Error Data
1. Monotony failure
2. Points too close
3. Too few points
4. Vertex failure
5. Wrong vertex
6. Greater than 60 deg curvature
7. Sigma too big

LEGAL NOTICE

This report was prepared as an account of Government sponsored work. Neither the United States, nor the Commission, nor any person acting on behalf of the Commission:

A. Makes any warranty or representation, expressed or implied, with respect to the accuracy, completeness, or usefulness of the information contained in this report, or that the use of any information, apparatus, method, or process disclosed in this report may not infringe privately owned rights; or

B. Assumes any liabilities with respect to the use of, or for damages resulting from the use of any information, apparatus, method, or process disclosed in this report.

As used in the above, "person acting on behalf of the Commission" includes any employee or contractor of the Commission, or employee of such contractor, to the extent that such employee or contractor of the Commission, or employee of such contractor prepares, disseminates, or provides access to, any information pursuant to his employment or contract with the Commission, or his employment with such contractor.

TECHNICAL INFORMATION DIVISION
LAWRENCE RADIATION LABORATORY
UNIVERSITY OF CALIFORNIA
BERKELEY, CALIFORNIA 94720