UCRL-18619
cy. 2

RECEIVED
LAWRENCE
RADIATION LABORATORY
MAR 14 1969
LIBRARY AND
DOCUMENTS SECTION

PHYSICS
Semiannual Report
May through October 1968

TWO-WEEK LOAN COPY

This is a Library Circulating Copy which may be borrowed for two weeks. For a personal retention copy, call Tech. Info. Division, Ext. 5545

Lawrence Radiation Laboratory
University of California - Berkeley

UCRL-18619 cy. 2

DISCLAIMER

This document was prepared as an account of work sponsored by the United States Government. While this document is believed to contain correct information, neither the United States Government nor any agency thereof, nor the Regents of the University of California, nor any of their employees, makes any warranty, express or implied, or assumes any legal responsibility for the accuracy, completeness, or usefulness of any information, apparatus, product, or process disclosed, or represents that its use would not infringe privately owned rights. Reference herein to any specific commercial product, process, or service by its trade name, trademark, manufacturer, or otherwise, does not necessarily constitute or imply its endorsement, recommendation, or favoring by the United States Government or any agency thereof, or the Regents of the University of California. The views and opinions of authors expressed herein do not necessarily state or reflect those of the United States Government or any agency thereof or the Regents of the University of California.

UCRL-18619
UC-34 Physics
TID-4500 (52nd Ed.)

PHYSICS
Semiannual Report

May through October 1968

November 1968

David L. Judd
Associate Director for Physics

LAWRENCE RADIATION LABORATORY
University of California
Berkeley, California

This work was done under U. S. Atomic Energy Commission contract W-7405-eng-48. Some results reported in this document may be preliminary or incomplete. The Lawrence Radiation Laboratory requests that this document not be quoted without consultation with the author or the Technical Information Division.

Printed in the United States of America
Available from
Clearinghouse for Federal Scientific and Technical Information
National Bureau of Standards, U. S. Department of Commerce
Springfield, Virginia 22151
Price: Printed Copy $3.00; Microfiche $0.65

PHYSICS SEMIANNUAL REPORT

May through October 1968

Contents

PHYSICS RESEARCH

Theoretical Physics: Chew

High-Energy Physics

Multiperipheral Dynamics 1

Multiperipheral Unitarity away from the Forward Direction 1

The New Multiperipheral Model in s, t Variable 1

Do Finite Energy Sum Rules in Pion Photoproduction Prove the Existence of a Pion Conspiracy? 2

Sums of Direct-Channel Regge Pole Constributions and Crossing Symmetry 2

Double Peripheral Model for Three-Body Final-State Reactions 3

Veneziano-Suzuki Model with Spin 3

A Model for $\pi\pi$ Scattering 3

Regge Trajectories 3

A Model of Indefinitely Rising Trajectories 4

Exchange Degenerate Conspirators in Nucleon-Nucleon and Nucleon-Antineucleon Charge-Exchange Reactions 4

Absorption and Regge Exchange 4

Mechanism for Crossover 5

A Regge Classification of the Baryon Resonances 5

General Parameterization of Regge Residues and Trajectories 5

Evidence for Exchange of ρ and A_2 Regge Poles in the Reactions $\pi^+p \rightarrow \pi^0\Delta^{++}$, $\pi^+p \rightarrow \eta^0\Delta^{++}$, and $K^+p \rightarrow K^0\Delta^{++}$ 5

Double Regge Analysis of the Reaction $K^+p \rightarrow K^+\omega p$ at High Energy 6

Regge Poles and the p-p Differential Cross Sections from Serpukhov 6

Regge Pole Expansion at $t = 0$ 6

Why $\sigma^{tot}_{N\bar{N}}$ Is Larger than σ^{tot}_{NN} at Nonasymptotic Incident Energy 7

Reggeization of External Particles 7

The Pomeranchon as a Mirage Trajectory 8

Exploration for S-Matrix Dynamics 8

Reggeized External Lines 8

Relativistic Wave Equations for Strong Interactions 8

Exchange Potentials in the Bethe-Salpeter Equation 8

Calculation of Scattering with a Spinor Bethe-Salpeter Equation. 9

*Preceding Semiannual Reports: UCRL-18235, UCRL-17876

Crossing-Symmetric Bootstrap Solution and Large-Angle p-p Scattering 9
Nonrelativistic Quantum Mechanics in Terms of Currents 9
Theory of Currents and the Nonstrong Interactions 10
Theories at Infinite Momentum 10
Infinite Momentum Limit 10
Sugawara's Theory of Currents 10
Current Algebra 11
Fourth-Order Electromagnetic π^+-π^0 Mass Difference 11
An I = 1 $\pi\pi$ Sum Rule and the Derivative of the S-Wave Amplitudes 12
Compton-Scattering Sum Rules 12
Finite-Energy Sum Rules and the Process $0^- + 0^- \rightarrow 0^- + 0^-$ 12
Pion Conspiracy and Continuous-Moment Sum Rules 12
Connection Between Octet Dominance and Exchange Degeneracy 12
Phenomenological Lagrangian for Hadrons 13
Calculation of Strong-Coupling-Constant Shifts 13
Calculation of the Coupling Constants $g^2_{\Lambda KN}$ and $g^2_{\Sigma KN}$ Using Kaon-Nucleon Dispersion Relations 13
Decays of Neutral Pseudoscalar Mesons into Lepton Pairs 14
Zero-Mass Bosons in S-Matrix Theory 14
Low-Energy Theorems and the Pomeranchuk Trajectory for Compton Scattering 14
Strong π-α Scattering with Electromagnetic Corrections 14
Analysis of π-He Scattering for the Pion Electromagnetic Form Factor 15
T-Products and Spectral Function Sum Rules in a Theory of Currents 15
On Interacting Local Quantum Fields Describing Masses and Spins 15
Crossing Matrix for the Helicity Amplitudes of $a + b \rightarrow 1 + 2 + 3$ 16
$^1G_4$ Nucleon-Nucleon Phase Shift and the Σ Meson 16
Analyticity in General Field Theory 16
Derivation of the Cutkosky Formula 16
Macroscopic Causality and Analyticity Properties of the S Matrix 17
Weak Asymptotic Causality of the Haag-Ruelle S Matrix 17
Nuclear Physics
Separable-Potential Models of the Nucleon-Nucleon Interaction 18
Average Nuclear Properties 18
Average Nuclear Properties 18
Stability of Superheavy Nuclei and Their Possible Occurrence in Nature . . . 18
Accelerator Theory
Analysis of the Electron-Ring Accelerator 19
Transverse Space-Charge Effects in Circular Accelerators 19
Atomic Physics
Rearrangement Collisions Between Slow Atoms and Ions 20
Ionization of a Heavily Ionized Atom by Electron Impact 20
Plasma Physics
Quasilinear Evolution of the Weibel-Kahn Instability 20

Influence of Fluctuating Forces at Arbit Extrema 20
Interaction of Intense Relativistic Electron Beams with Self-Generated Plasmas. 20
Miscellaneous Theoretical Physics
Variational Principles for Integrals 21
The Equivalence Principle and Dynamics 21
Some Implications of a New Source of Cosmic Ray Muons 21
Perturbation Theory for Magnetic Monopoles 21
Publications and Papers 22

Experimental Physics: Solmitz
Bubble Chamber Experiments
Associated Production Experiment 25
Hyperon Production and Decay 25
K63 Experiment
Production and Decay of Cascade Hyperons 25
The Reactions $K^-p \rightarrow \bar{K}^0 n$ and $K^-p \rightarrow \Lambda \pi^0$ 26
The Decay $\omega \rightarrow \pi^+\pi^-$ 26
Resonance Production in $K^-p \rightarrow \Sigma\pi\pi$, $\Sigma\pi\pi\pi$ 26
Study of $K^-p \rightarrow \Sigma^{\pm}\pi^{\mp}$ 27
The Reaction $K^-p \rightarrow K^*_{1/2}(892)\, N^*_{3/2}(1238)$ 27
Study of K^-p Four-Pronged Reactions 27
K^- Interactions in Deuterium 27
K65 Experiment
Direct Evidence for the Multiplet Assignments of $\Lambda(1520)$ and $\Lambda(1405)$ . . 28
Study of Σ Decay Parameters 28
Σ Interactions and Decays 28
Σ^+ Magnetic Moment 29
$K^-p \rightarrow \Lambda \pi^+\pi^-$ and $K^-p \rightarrow \Lambda$ + Missing Mass. 29
Charge-Exchange ($K^-p \rightarrow \bar{K}^0 n$) and Elastic ($K^-p \rightarrow K^-p$) Reactions . . . 29
Study of the Neutral K Meson. 30
π66 Experiment
π^+d Interactions from 1.1 to 2.3 GeV/c 30
π^+d Interactions from 2.8 to 4.2 GeV/c 30
Search for a $2\pi^0$ Resonance Near 730 MeV in π^+d Interactions 31
BP66 Experiment 31
P67 Experiment 31
Antiproton Interactions in Hydrogen and Deuterium 31
D66 Experiment 32
P65 Experiment 32
Nonstrange Interactions in pp Collisions at 6.6 GeV/c 32
Strange-Particle Interactions in pp Collisions at 5.5 and 6.6 GeV/c . . . 33
LRL-SLAC Experiment on π^-p Inelastic Reactions. 33
K82 Experiment 33

π82 Experiment. 34
Backscattered Laser Beam at SLAC. 34
Study of Vector Meson Photoproduction 34
Accelerator Experiments Using Spark Chambers
Program in Collaboration with the Moyer-Helmholz Group 34
Neutral Decay Modes of the η Meson 34
Search for the Decay $N^*(1688) \rightarrow n\eta$ 35
Neutral Diboson Experiment 35
Deuteron Missing-Mass Experiment. 35
Experimentation Using Cosmic Rays
High-Altitude Particle Physics and Cosmic-Ray Experimental Facility 36
Emulsion Spectrograph Program 38
LRL-SLAC Cosmic-Ray Experiment 38
Flux Amplifier 38
Data-Reduction Operations 38
Effort 38
Scanning 39
Measuring 41
Programming Effort
Personnel 41
Introduction 41
Programs
Data-Editing Programs 42
Data-Analysis Programs 42
Library-Function Programs 42
Spiral-Reader Programs 42
Spark-Chamber Programs 43
Support Programs 43
Programming Notes Written During this Period 43
Particle-Data Group 44
Publications and Papers. 44

Experimental Physics: Crowe, Miller
Radiative Capture of Stopped π^- Mesons on Nuclei 47
Measurement of the Differential Cross Section for $\pi^- p \rightarrow n\gamma$ at 200, 320, and 370 MeV 47
K_2^0 Charge Asymmetry 48
$\pi\pi$ S-Wave Interaction 49
$K_{\mu 3}^0$ Charge Asymmetry. 49
Measurement of the Differential Cross Section for $\pi^- p \rightarrow n\gamma$ between 500- and 1200-MeV Pion Energies 50
Pion Form Factor. 50
Status of the 184-Inch Cyclotron Extraction Studies. 50
Publications and Papers. 51

Nuclear Emulsion Group: Heckman

Low-Altitude Geomagnetically Trapped Protons 53
Particle Identifier 53
Stopping-Power Differences of $\pi^{\pm}$ Mesons in Emulsion. 54
High-Energy Neutron Spectrum Measurements 54
Fundamental Studies of Track Formation in Solids 54
Publications and Papers 55

Experimental Physics: Lofgren

Diboson Production by 2- to 5-GeV/c Pions 57
Measurement of the $(K^+ \rightarrow e^+\nu)/(K^+ \rightarrow \mu^+\nu)$ Branching Ratio 57
Neutral Leptonic Currents 57
Nucleon-Nucleon Triple Scattering 58
Total Cross Sections at Cosmic Ray Energies 58
Publications and Papers 58

Experimental Physics: Moyer-Helmholz

η^0 Decay and $\pi^0\pi^0$n Experiments 59
Partial Capture Rates of Muons by ^{16}O Leading to Excited Nuclear States of ^{15}N 59
K_{e4} Experiment 60
Comparison of the Lifetimes of Positive and Negative Pions 60
$K^0_L \rightarrow 2\pi^0$ 61
Photoproduction of Vector Mesons (SLAC) 62
p-He Scattering Experiment 62
Measurement of $np \rightarrow \gamma d$ Angular Distribution as a Direct Test of Time Reversal in the Electromagnetic Interaction. 63
π^- - ^{3}He Interactions 63
Wire Spark Chambers and Electronic Readouts 63
Spark Chambers for Medical Program 64
Publications and Paper 64

Experimental Physics: Powell-Birge

$K^-p \rightarrow \Lambda\pi^0$ 67
K^-d and K^-n Elastic Scattering 67
K^-p Interactions around 1 GeV/c and the $Y^*_0(1815)$ 67
π^+p Interactions between 2.9 and 4.1 GeV/c 68
Study of the Strange Particle Channels in π^+p between 1.3 and 1.85 GeV/c . . . 68
Two-Prong Events in π^+p Film between 1.3 and 1.85 GeV/c 69
On-Line System. 69
Data Reduction 69
Publications and Papers 70

Experimental Physics: Segrè-Chamberlain
Observation of Σ^--Hyperonic Atoms 73
K^--Mesic Atoms 73
Rare Decays of Charged K Mesons 73
Pionic Atoms 74
Nucleon-Nucleon Interactions 75
Antiproton-Proton Interactions 75
Low-Energy π^-p Interactions 75
Polarization in π^+p and π^-p Elastic Scattering from 250 to 410 MeV 76
Search for T Violation in Inelastic ep Scattering 76
Polarized-Proton Target Improvements 77
Polarization in Backward np Scattering at 3 to 6 BeV 77
Publications and Papers 77

Atomic Beam Group: Shugart
Atomic Beam Studies 79
Publications and Papers 79

Experimental Physics: Trilling-Goldhaber
π^+p Interactions at 3.7 GeV/c 81
K^+d Interactions from 860 to 1850 MeV/c 81
Λ^0p Interactions 82
$Kp \rightarrow \Lambda\pi$ Interactions at Low Energy 82
K^+p Interactions at 9 GeV/c 82
Publications and Papers 83

Experimental Physics: Van Atta
Plasma Studies 85
Publications and Papers 85

25-Inch Hydrogen Bubble Chamber: Powell, Kadyk, and Eckman
Gas Purity 87
Magnet Shorts 87
Refrigeration Compressor 87

Health Physics: Patterson
Low-Background Counting Facility 89
Radiogeology 89
Medical Spark Chamber Project 89
Evaluation of Fluxes and Dose-Equivalent Rates in Neutron Fields
Around High-Energy Proton Accelerators 90
Numerical Solution Methods for First-Order Fredholm Integral Equations . . 90
Continuing Project: 88-Inch Cyclotron Cave-4 Shielding Studies 90
Ranges and Stopping Power of Heavy Ions in Nongaseous Media 91
Publications and Papers 91

Mathematics and Computing: Baker
Applications Programming
Physics
For Powell-Birge Group 93
For Trilling-Goldhaber Group 94
For Lofgren Physics Group 96
For Moyer-Helmholz Group 96
For Segrè-Chamberlain Group 96
Nuclear Chemistry
Multidimensional Experiments 97
Small Computer Systems 97
Spectral Analysis 98
Cross Sections 99
Miscellaneous 99
Accelerator and Magnet Design
Magnet Design 99
Orbit Studies 100
Electron-Ring Accelerator 100
Special Projects 100
Biomedical Applications
Instrumentation 100
Quantitative Models 101
Radiation Dosimetry 102
Data Processing 102
Miscellaneous Biomedical Computations 102
Miscellaneous
Bevatron Control 103
Job Scheduling 103
Printed Circuit Artwork 103
Magnet Test Data 103
Systems Programming
6411 103
Accelerator Link 104
Mass Storage System 104
Program Storage System 104
6600 104

Research in Mathematics and Computer Science
Computer Typography 105
Interactive Time-Sharing System 105
General-Purpose Macro Processor 105
Nonlinear Block Successive Overrelaxation 106
Capillary Fluid Mechanics . . . . . .
Etiology of Leukemia . . . . . .

Computer Operations 106
Publications and Papers 107

Data Handling: White 109
Computer Program Development 109
HAZE: Semiautomatic Event Measurement 109
FCF: Geometry, Kinematical Analysis, and Data Display. 110
TRIST: System Monitor 110
EVENT ACCOUNTING 110
DAPR: Fully Automatic Event Scanning and Measurement 110
Data-Processing Operations 112
Publications and Papers 113

ACCELERATOR OPERATION AND DEVELOPMENT

Accelerator Study Group: Lofgren
Study Group Activities 115
Booster Synchrotron 115
Radiofrequency Systems 115
Magnet Design 115
Superconductivity 115
Electron-Ring Accelerator Group 116
Publications and Papers 125

Bevatron: Lofgren
Operations 127
Publications and Papers 128

184-Inch Cyclotron: Vale 129

PHYSICS RESEARCH STAFF 135

PERMUTED KEYWORD INDEX 137

Physics Research

THEORETICAL PHYSICS

Geoffrey F. Chew in charge

I. HIGH-ENERGY PHYSICS

MULTIPERIPHERAL DYNAMICS

Geoffrey F. Chew, Carleton DeTar,* and Alberto Pignotti†

Following a suggestion by F. Low and M. L. Goldberger,[1] the Chew-Pignotti multiperipheral bootstrap mechanism has been cast into the form of an integral equation. The equation is based on unitarity and remains entirely within the physical region. At zero momentum transfer, the kernel of the equation possesses Lorentz symmetry and correspondingly can be diagonalized; families of Regge poles (Lorentz poles) emerge as eigenvalues of the kernel. Cuts in angular momentum also appear, but in a manner unambiguously related to the poles. Being an expression of unitarity, the equation encompasses the effects often described as "absorptive."

MULTIPERIPHERAL UNITARITY AWAY FROM THE FORWARD DIRECTION

Michael N. Misheloff

The extension of the multiperipheral unitarity equation to arbitrary momentum transfer is being considered. The aim is to relate the momentum-transfer dependence of the parameters of Regge trajectories in the elastic channel to the form of the amplitudes for inelastic processes.

THE NEW MULTIPERIPHERAL MODEL IN s, t VARIABLE

Peter D. Ting

The generalized AFS multiperipheral model is written down in terms of the usual invariant variables s_i and t_i; then a unitarity integral equation is derived for the forward direction. If we assume the internal vertex coupling constant is independent of Toller angle ω_i, we can show that at asymptotic incident energy the absorptive part of the 2-to-2 amplitude behaves as a power of the energy. From that we can reproduce the old AFS results for the production processes, i.e.,

(a) multiplicities grow logarithmically with the energy,

(b) constant inelasticity,

(c) the averaged transverse momentum of the secondary is independent on the incident energy.

---

*NDEA Title IV fellow.

†University of California, Santa Barbara.

1. M. L. Goldberger, Princeton University, and F. Low, Massachusetts Institute of Technology, private communication.

DO FINITE-ENERGY SUM RULES IN PION PHOTOPRODUCTION PROVE THE EXISTENCE OF A PION CONSPIRACY?

J. D. Jackson and C. Quigg

The original empirical evidence for the M = 1 pion came from Regge-pole models applied to forward np charge-exchange scattering and charged-pion photoproduction at high energies. These models, involving only a few Regge poles, could explain the sharp forward peaking of the cross sections by invoking a conspiracy between two Regge poles, the pion and its conspirator, whose trajectories and residues are related at t = 0. Alternative models, some employing Regge cuts, can also fit the high-energy cross sections without invoking a conspiracy. But DiVecchia and collaborators[1] have claimed that finite-energy sum rules in pion photoproduction give conclusive evidence of the pion conspiracy (and other conspiracies, such as B - ρ').

To investigate the reliability of the FESR conclusion on the pion conspiracy, a simple model of forward charged-pion photoproduction was developed, involving an evasive Regge-pion amplitude, plus a Regge-cut amplitude generated in the manner of the absorptive corrections to elementary-particle exchanges. With reasonable parameters this model can give a good fit to the forward $[-t < 0.1\,(\mathrm{GeV}/c)^2]$ photoproduction data at high energies. It is presently being applied to the FESR. While some further work is necessary, it is already clear that an adequate fit can be obtained to the FESR, computed from low-energy data. This means that a model with an evasive pion, plus a cut contribution, gives an equivalently good description of the data at small angles as the conspirator model. There is thus no justification for the claim that the M = 1 assignment for the pion is established by finite-energy sum rules.

SUMS OF DIRECT-CHANNEL REGGE-POLE CONTRIBUTIONS AND CROSSING SYMMETRY

N. N. Khuri

The problem of constructing mathematical models that have Regge behavior, crossing symmetry, and low-energy resonances, and that satisfy finite-energy sum rules, was studied in detail.

Starting with a sequence of parallel rising trajectories in the s-channel, we constructed examples of residue functions for which the Regge-Mandelstam pole contributions can be explicitly summed. The sum has Regge behavior in the s-channel as well as the t-channel, and satisfies fixed t dispersion relations and finite-energy sum rules. The residue functions we start with do satisfy the usual analyticity properties and threshold properties, and have the Mandelstam symmetry factor and the expected exponential behavior for large $|s|$. These results were achieved without fixing either the slope or the intercept of the leading trajectory and without specifying Im α in detail in the low- and intermediate-energy region. These examples were used to clarify some of the problems related to the use of finite-energy sum rules both as phenomenological relations and as dynamical equations. The way a finite but large number of s-channel resonances can be summed up to give Regge behavior in s was explicitly demonstrated. We also indicate how the observation of Schmid on the relation of the

1. P. DiVecchia et al., Phys. Letters 27B, 296, 521 (1968).

γ-exchange scattering to direct-channel resonances can be understood in terms of a direct-channel Regge-Mandelstam analysis.

DOUBLE PERIPHERAL MODEL FOR THREE-BODY FINAL-STATE REACTIONS

Edmond L. Berger*

Continuing are studies in which predictions of a Reggeized double-peripheral model are confronted with experimental data from several three-body final-state reactions. The functional dependence of the two-Reggeon–one-particle vertex on the Toller variable ω is being sought phenomenologically. Fits to data on several three-body final-state reactions are being investigated from the point of view of understanding the nature of the pion Regge trajectory. Partial-wave analyses of the double-Regge-pole model amplitude are in progress.

It has been demonstrated that the model is in quantitative agreement with the experimental distributions in all momentum transfers, invariant masses of final-state pairs of particles, and various angles for the reactions $pp \to pn\pi^+$, $pp \to \Delta^{++}\pi^- p$, and $\pi p \to \pi\rho p$ at several energies. In particular, the model works well even at near threshold values of the mass of a final state pair of particles, in accord with the duality concept. The data are consistent with a linear pion trajectory and require its slope to be unity or greater. No explicit dependence on the Toller variable ω appears demanded.

The processes $Kp \to K\pi\Delta$, $Kp \to K\rho p$, and $Kp \to \pi p K^*(890)$ are now being considered.

VENEZIANO-SUZUKI MODEL WITH SPIN

S. Mandelstam

An attempt is being made to include spin and I-spin in the Veneziano-Suzuki[1] formula. The self-consistency conditions resulting from the requirement that the intermediate particles be the same as the initial and final particles can be fairly restrictive. It appears that these conditions can be satisfied in a mathematical quark model which does not contain quarks as physical particles.

A MODEL FOR $\pi\pi$ SCATTERING

Joel Shapiro† and Joel Yellin

We discuss $\pi\pi$ elastic scattering using functions of the type recently proposed by Veneziano.[2] We elaborate on the problems of uniqueness, and neglect the Pomeranchon. We numerically compute the resonance widths, low-energy phase shifts, and the size of the high-energy diffractive peak.

REGGE TRAJECTORIES

Kuo-hsiang Wang

It has been shown that the Regge trajectories transform under the complex Lorentz group with the D^{α} representation functions induced by the subgroup 0(2, 1). The Mandelstam

---

*On leave from Dartmouth College, Hanover, N. H.

1. G. Veneziano, Nuovo Cimento 57A, 190 (1968); M. Suzuki, private communication.

†University of California, Berkeley.

2. Joel Shapiro and Joel Yellin, A Model for $\pi\pi$ Scattering, Lawrence Radiation Laboratory report UCRL-18500, September 1968.

plot has been decomposed into various parts according to the symmetries of the scattering amplitude. The generalization to the Regge trajectories with definite parities has been carried out. The signature was introduced in an unconventional way but was proved to be equivalent to the usual one. This led to a different form for the parity-conserving amplitude. As an application, we have set up the "rules" for writing down amplitudes for any multi-Regge diagrams. Further investigations of the kinematical singularities of the new parity-conserving amplitudes are in progress.

A MODEL OF INDEFINITELY RISING TRAJECTORIES

Shu-yuan Chu,* Chung-I Tan, and Peter D. Ting

Motivated by both the experimental and the theoretical developments, we conjecture that there exists a universal parameter R such that a resonance can be coupled to a channel strongly only if the square of the mass of the resonance lies within a distance R from the threshold of a particular channel. The consequences of the dynamical model based on this conjecture include:

(1) Leading Regge trajectories can only rise with rates between C = 5-1/2 and C = 5-3/2.
(2) The slope "C" is the same within a group of trajectories that bootstrap themselves.
(3) The finite-energy sum rule is reinterpreted.

EXCHANGE DEGENERATE CONSPIRATORS IN NUCLEON-NUCLEON AND NUCLEON-ANTINUCLEON CHARGE-EXCHANGE REACTIONS†

Akbar Ahmadzadeh‡

A phenomenological study is being made of neutron-proton and proton-antiproton charge-exchange differential cross sections. In this calculation, in addition to ρ and A_2 trajectories, two other pairs of exchange degenerate trajectories together with their coconspirators have been taken into account. One pair is the pion and its exchange degenerate partner, the B meson. Each forms a type-III conspiracy. The second pair is the A_1 trajectory and its exchange degenerate partner. Each forms a type-II conspiracy. All trajectories are assumed to be linear and to satisfy exchange degeneracy exactly. Based on the pn charge-exchange data, this model predicts a somewhat smaller (by about 10) $\bar{p}p$ charge-exchange differential cross section than is actually observed. Further numerical work is still in progress.

ABSORPTION AND REGGE EXCHANGE

Geoffrey Fox and Gordon A. Ringland**

We have considered the absorption model with Regge exchange as a simulator for pole and cut contributions in the J plane. The effective trajectory has been analyzed in terms of the t dependence of the input Regge pole and the elastic scattering of the initial and final states.

---

*University of California, Riverside.
†Supported in part by the Air Force Office of Scientific Research under grant number AFOSR-1294-67.
‡Department of Physics, Arizona State University, Tempe, Arizona 85281.
**Miller Postdoctoral Fellow.

MECHANISM FOR CROSS-OVER

Geoffrey Fox, Robert Logan,* and Gordon A. Ringland†

A study of the problems of cross-overs in $K^{\pm}p$, pp, and $\bar{p}p$ elastic scattering has been carried out in terms of two C = -1 exchanges. Constraints and consistency with regard to SU(3) and inelastic reactions such as $\gamma p \to \pi^0 p$ have been imposed.

A REGGE CLASSIFICATION OF THE BARYON RESONANCES

Stanley Klein

A parameterization for a family of Regge trajectories has been given which has the following properties: (1) The trajectories $\alpha_K(t)$ satisfy the conspiracy constraints at $t = 0$. (2) The trajectories do not intersect for $t > 0$. (3) The observed baryon resonances so far are consistent with this scheme. The I = 1/2 and I = 3/2 resonances have each been fitted with a single family of trajectories; the I = 0 resonances (the octet and singlet Λ resonances) have been fitted by a pair of exchange-degenerate families.

A few of the predicted resonances have not been found experimentally, but the present state of the phase-shift analyses is too rough to rule out these resonances. One of the main purposes of this work is to stimulate the search for resonances in the mass region 2000 through 2200 MeV.

GENERAL PARAMETERIZATION OF REGGE RESIDUES AND TRAJECTORIES

Stanley Klein

We are attempting to find the most general parameterization of Regge vertices and trajectories which satisfies the constraints of factorization and analyticity. By using a general parameterization which satisfies both the threshold and pseudothreshold conditions, we have been able to investigate the limit in which the mass of an external particle with spin goes to zero.

EVIDENCE FOR EXCHANGE OF THE ρ AND A_2 REGGE POLES IN THE REACTIONS $\pi^+p \to \pi^0\Delta^{++}$, $\pi^+p \to \eta^0\Delta^{++}$, AND $K^+p \to K^0\Delta^{++}$

Robert Mathews

We have studied a set of three reactions involving Δ^{++} production—$\pi^+p \to \pi^0\Delta^{++}$, $\pi^+p \to \eta^0\Delta^{++}$, and $K^+p \to K^0\Delta^{++}$. Because of t-channel quantum-number restrictions, exchange of only a few high-lying Regge trajectories is allowed. These trajectories are ρ, A_2, and $\rho + A_2$, respectively. In this respect these Δ production reactions are similar to the reactions $\pi^-p \to \pi^0n$, $\pi^-p \to \eta^0n$, and $K^-p \to K^0n$, whose high-lying Regge exchanges are also restricted to ρ, A_2, and $\rho + A_2$. Effective α plots of the ρ and A_2 trajectories have been obtained from the Δ reaction data which are consistent with those obtained from the above reactions with a neutron in the final state. We have compared differential cross sections for corresponding reactions and have observed that similar exchanged particles yield similarly shaped differential cross sections. That is, the ρ exchanges produced narrow forward peaks, dips at $t \approx -0.6$, and secondary maxima; the A_2 exchanges produced broad forward peaks; and

---

*Department of Physics, University of Toronto, Toronto, Canada.
†Miller Postdoctoral Fellow.

the $\rho + A_2$ exchanges produced intermediate-width forward peaks. It is noted that the intermediate-width forward peak for the K reactions is consistent with SU3, which would predict roughly equal proportions of ρ and A_2 exchange. The idea of exchange degeneracy is also discussed, especially with regard to the remarkable experimental evidence that the Δ^{++} density matrices for the three Δ production reactions are consistent with being equal.

DOUBLE REGGE ANALYSIS OF THE REACTION $K^+p \to K^+\omega p$ AT HIGH ENERGY

A. Pignotti (with G. Alexander, A. Firestone, C. Fu, and G. Goldhaber)*

We have obtained results for the ω and ϕ production in $K^+p \to K^+\omega p$ and $K^+p \to K^+\phi p$ interactions at incident momenta of 4.6 and 9.0 GeV/c. There is no statistically significant evidence for $K\omega$ or $K\phi$ resonance production. The 437 $K^+\omega p$ events at 9 GeV/c have been analyzed in terms of a multiperipheral Regge model on the entire Dalitz plot. The events have been assigned to the various peripheral diagrams on the basis of criteria in the four-momentum transfers. A satisfactory description of the data has been obtained on the basis of diagrams involving Pomeranchuk and meson exchanges.

REGGE POLES AND THE pp DIFFERENTIAL CROSS SECTIONS FROM SERPUKHOV

William Rarita

Preliminary results on the pp differential cross sections from 25 to 75 GeV/c give the slope of the effective one-pole trajectory to be equal to 0.7 $(\text{GeV/c})^{-2}$. The predicted value for this quantity from a recent paper[1] is 0.5 $(\text{GeV/c})^{-2}$. When the more complete data become available from Serpukhov, we plan to reevaluate the parameters of the Regge poles according to the model of Ref. 1. We anticipate there will be not much change.

REGGE-POLE EXPANSION AT $t = 0$

J. H. Weis†

The Regge-pole expansion of the S matrix at vanishing momentum transfer (t) has been investigated for general masses [equal (E), unequal (U), and zero (0)]. The Regge-pole spectrum and residues necessary to give a S matrix with the correct kinematic and analytic properties are found to be unique under the following assumptions: (1) There is at most one Regge trajectory (with factorizable residue) of any given quantum numbers and intercept at $t = 0$. (2) At $t = 0$ the leading trajectory of the family does not decouple from the channels under consideration (at least one U channel must be included). The unique E-channel residues are found to be those of a single Lorentz pole. If there is no coupling to U channels but coupling to E channels of arbitrarily high spin, then there is only one possible solution in addition to a single Lorentz pole. Therefore a single Lorentz pole must be regarded as the physically most natural solution to the equal-mass conspiracy problem. In addition we have given a simple derivation of the minimal small t dependence of the amplitudes, residues, and trajectories for

---

*Trilling-Goldhaber Group, LRL.

1. W. Rarita, R. J. Riddell, Jr., C. B. Chiu, and R. J. N. Phillips, Phys. Rev. 165, 1615 (1968).

†NSF Predoctoral Fellow.

leading trajectories which treats the UU, UE, EE, 0U, 0E, and 00 reactions together, and a simple derivation of the leading t behavior of all the U and 0 residues.

WHY $\sigma_{N\bar{N}}^{tot}$ IS LARGER THAN σ_{NN}^{tot} AT NONASYMPTOTIC INCIDENT ENERGY

Peter D. Ting

By including the nucleon, kaon, and hyperon trajectories in the newly developed multiperipheral model, and by excluding the B = 2, S = 0 baryon, the B = 1, S = 1 strangeness baryon, and the |S| = 2 strangeness meson which couple strongly to NN, KN, and KK channel respectively, we can conclude automatically that $\sigma_{N\bar{N}}^{tot} > \sigma_{NN}^{tot}$ and $\sigma_{K\bar{N}}^{tot} > \sigma_{KN}^{tot}$ at the nonasymptotic incident energy.

If we assume all the coupling constants are charge-independent, and an isospin-2 meson or hyperon and isospin-3/2 nucleon or kaon do not exist, we can also get $\sigma_{\pi^-p}^{tot} > \sigma_{\pi^+p}^{tot}$, $\sigma_{K^-p}^{tot} > \sigma_{K^-n}^{tot}$, etc. at finite incident energy.

REGGEIZATION OF EXTERNAL PARTICLES

M. L. Thiebaux*

A ρ bootstrap model in $\pi\pi$ scattering has been proposed[1] in which the bootstrap conditions determine a relation between the analytically continued spin J and mass M of an external pion. This model was used in the study of the following problems:

(1) The statement of unitarity was reexamined in light of the desirability of a more complete treatment of unitarity which would require introduction of intermediate channels containing the a priori unknown recurrences of the external pion. However, to avoid the complexity of multichannel techniques, we retain only the lowest ($\pi\pi$) intermediate channel and handle the external channels in a continuously variable way.

(2) The method of writing down bootstrap conditions in this system was generalized. An arbitrary number N of pole terms with J, M-dependent residues may be added to the partial-wave Born amplitudes to help satisfy crossing in the neighborhood of the ρ resonance and to guarantee that the mass-spin relation yields J = 0 at $M = m_\pi$. Crossing is approximated by minimizing the difference between the direct and crossed p-wave amplitude at 2N points in the energy plane. Only when N = 1, as in the original proposal, does the difference actually vanish.

(3) Progress was made in the problem of interpolating the amplitudes between integral values of J. If we suppose that the external particle in question has spacelike momentum, then the particle may have a J which is any complex number.[2] The Born amplitudes were recalculated this way, and M^2 was analytically continued from negative to positive values for any fixed J. The amplitudes so obtained were found to be identical to those computed in the conventional way with J a nonnegative even integer. The unique continuation in J thereby established incidentally guarantees that the amplitudes have kinematic singularities that are uniformly factorizable for all values of J in the special case M = 1.

---

*University of Massachusetts, Amherst, Massachusetts.

1. M. L. Thiebaux, Phys. Rev. 170, 1244 (1968).
2. M. Toller, Il Nuovo Cimento 37, 631 (1965).

THE POMERANCHON AS A MIRAGE TRAJECTORY

Shu-yuan Chu,* Chung-I Tan, and Peter D. Ting

We conjecture that the Pomeranchon is a mirage trajectory. A mirage trajectory is a moving Regge trajectory which does not have any particle lying on it. We have constructed a possible model of mirage trajectories where "nonsense" is chosen at every physical J value.

Consequences of this conjecture include:

(1) nonexistence of Mandelstam cuts involving the Pomeranchon,

(2) a justification of Harari's conjecture,

(3) a possible explanation of the smallness of the Pomeranchon slope.

EXPLORATION FOR S-MATRIX DYNAMICS

Rudolph C. Hwa

Analytic properties of the regularized M functions in the invariant space have been studied; they have been found to have kinematical constraints at $S_{12} = 0$, $s = 0$ and $\Phi = 0$. The merits and drawbacks of the helicity amplitudes, invariant amplitudes, and M functions have been compared. No one set of amplitudes has all the desirable features in every aspect.

Attempts to Reggeize external particles have been made, and the properties of the scattering amplitudes for Reggeons have been investigated. A connection with the necessity of parallel trajectories has been found. Detailed aspects of the theory are still under investigation.

REGGEIZED EXTERNAL LINES

I. T. Grodsky

Using a modified Blankenbecler-Sugar equation, we generate a prescription for coupling linearly rising trajectories of all spins. The resulting amplitudes satisfy usual crossing symmetry and analyticity, and contain only dynamical poles. The structure and asymptotic behavior of these functions are under investigation.

RELATIVISTIC WAVE EQUATIONS FOR STRONG INTERACTIONS

Charles Zemach

A general study of the properties and methods of solution for the Bethe-Salpeter equation has been pursued. The most promising line of attack for solving the equation, at least for the simpler cases, appears to be the use of the differential form of the equation to generate the wave function as a power series in the radial variable and eschew the usual integration techniques. So far, this approach has worked well with preliminary models.

EXCHANGE POTENTIALS IN THE BETHE-SALPETER EQUATION

B. C. McInnis†

Calculation of scattering in the two-scalar system for the exchange ladder approximation in the Bethe-Salpeter equation has been attempted. Compared to previous calculations[1]

*University of California, Riverside.
†University of California, Berkeley.

1. C. Schwartz and C. Zemach, Theory and Calculation of Scattering with the Bethe-Salpeter Equation, Phys. Rev. 141, 1454 (1966); W. B. Kaufmann, Numerical Solutions of the Bethe-Salpeter Equation, Lawrence Radiation Laboratory report UCRL-18220, May 1968.

for direct potentials, the present calculation does not exhibit rapid convergence. Phase shifts may be obtained to an estimated accuracy of 5%; however, the calculation requires a significant amount of computer time. The reason for the slow convergence is the asymmetric asymptotic behavior of the wave function in the relative time variable ($T \to \pm\infty$). Attempts are now under way to rectify this situation. If these are successful, dynamics in the πN system may be effectively studied via the Bethe-Salpeter equation "with a modest use of computing machinery."[1]

CALCULATION OF SCATTERING WITH A SPINOR BETHE-SALPETER EQUATION

B. C. McInnis

The elastic-scattering amplitude for a spin-1/2, spin-0 system has been calculated using the Bethe-Salpeter equation. The interaction kernel was taken as one-particle (scalar) exchange. No comparison with the πN phase shifts was attempted; however comparison with the equivalent calculation[2] for the two-scalar system indicates that this system contains much more structure. For example the $\ell = 1$, $j = 1/2$ phase shift, attractive at the elastic threshold, changes sign in the elastic region. The structure obtained in this calculation would imply that significant structure in the NN system could be obtained with just one-pion exchange, even though the pion is such a light particle.

CROSSING-SYMMETRIC BOOTSTRAP SOLUTION AND LARGE-ANGLE pp SCATTERING

K. M. Ong and John Harte*

Data for large angle pp scattering cross sections and proton form factors have been analyzed in terms of a crossing-symmetric bootstrap solution. This solution, derived from the asymptotic solution to the Bethe-Salpeter equation, predicts a possible exponential fourth-root dependence on s, t, and u. We have obtained good fits to existing scattering data. In addition the coefficient of the exponent has been found to be consistent with that obtained by analyzing the form-factor data alone.

NONRELATIVISTIC QUANTUM MECHANICS IN TERMS OF CURRENTS

David J. Gross

The second-quantized theory of nonrelativistic interacting spinless bosons or fermions has been formulated in terms of particle densities and currents. We have found that natural physical requirements allow one to reconstruct the Fock space, to solve the theory formally, and to construct creation and annihilation operators for the interacting bosons or fermions.

---

1. Abstract of Ref. 1, preceding page.
2. As this work was being carried out it was noted in collaboration with C. Schwartz that in the original Bethe-Salpeter equation scattering calculation "Theory and Calculation of Scattering With the Bethe-Salpeter Equation," Phys. Rev. 141, 1454 (1966), and in the subsequent work of W. B. Kaufmann, UCRL-18220, the evaluation of the Green's function matrix elements was in error. This correction was submitted to Phys. Rev.

*AEC Postdoctoral Fellow.

THEORY OF CURRENTS AND THE NONSTRONG INTERACTIONS

D. J. Gross and M. B. Halpern

General perturbations away from Sugawara's theory of currents are considered. The usual forms for the semistrong, electromagnetic, and weak interactions are easily incorporated, and using a modified interaction picture, we have found a covariant Feynman-graphical approach to the perturbation theory. There is some degree of uniqueness in the allowed perturbation, for we find that if infinite polynomials are to be avoided in the theory, the perturbations must be of the form $V_\mu V^\mu$, $V_\mu C^\mu$ (C^μ a canonical vector field) or σ (the scalar density of Bardakci, Frishman, and Halpern).[1] Thus, for example, nonminimal electromagnetic coupling is ruled out.

THEORIES AT INFINITE MOMENTUM

K. Bardakci* and M. B. Halpern

We have constructed Galilean invariant theories (with Schrodinger equations) which describe interacting relativistic systems at infinite momentum. Classes of both first and second quantized theories have been found. The formalism provides a general approach to the saturation of current algebra; positivity of mass spectrum is guaranteed and as much inelasticity as necessary may be introduced. More generally, however, such theories offer the hope of potential-theoretic intuition for relativistic physics.

INFINITE-MOMENTUM LIMIT

G. C. Fox

The infinite-momentum frame has certain advantages over the customary center-of-mass system. In this frame $s \to t$ crossing and the little group expansion function are both z rotations. In addition the analyticity is much superior.

Applications to finite-energy sum rules, analyticity and Regge exchange, and dynamics of Regge cuts have been made. The first two exploit the above-mentioned simplifications. The last may be made because Gribov[2] uses the infinite-momentum frame in an asymptotic disguise called "the Sudakov method."

SUGAWARA'S THEORY OF CURRENTS

Arnulf Rabl

Several aspects of Sugawara's theory of currents are under investigation. An interesting problem is the calculation of form factors. By sandwiching the equations of motion for the currents between single particle states, one can obtain coupled nonlinear equations for various form factors. It is hoped that a suitable approximation may be found which will yield reasonable expressions for the pion and nucleon form factors.

---

1. K. Bardakci, Y. Frishman, and M. B. Halpern, Phys. Rev. 170, 1353 (1968).
*University of California, Berkeley.
2. V. N. Gribov, Reggeized Graph Techniques, Cambridge University preprint, 1968 (unpublished).

CURRENT ALGEBRA

Perry Shers

Pole dominance of the axial-vector current matrix elements, the usual chiral SU(3) ⊗ SU(3) algebra generated by the time components of the vector and axial-vector currents, and crossing symmetry have been used to derive on-mass-shell analogues of the Adler-Weisberger, self-consistency, and other similar relations. These determinations of the scattering amplitude at a particular point are used to make subtractions in a new type of dispersion relation. Owing to the special choice of variables, the contributions of the Born terms to the s-wave scattering lengths are suppressed, and the resulting formulae consist of sums of the usual current algebra results, simple correction terms, and dispersion integrals. Rough evaluations of the integrals in the case of pion-nucleon scattering yield reasonable results. A detailed evaluation of all the sum rules is in progress. Our methods also enable us to estimate, within the context of simple models, the errors in meson pole dominance of the axial-vector current matrix elements.

FOURTH-ORDER ELECTROMAGNETIC $\pi^+\pi^0$ MASS DIFFERENCE

I. S. Gerstein* and H. J. Schnitzer

The fourth-order electromagnetic mass difference of pions has been investigated using chiral SU(2) × SU(2) current algebra for zero-mass pions. It has been assumed, for simplicity, that the Schwinger terms occurring in this current algebra are c numbers. An exact representation of the fourth-order mass difference in terms of the proper four-point functions for A_1-A_1-ρ-ρ scattering has been obtained. Using the Ward identities for four- and three-point functions one may show that three kinds of terms occur:

(a) an overlapping double integral which is superficially divergent

(b) a nested double integral which is divergent

(c) a double integral which is expressed in terms of the proper three- and four-point functions.

Since (a) and (b) above depend only on two-point functions, they give results independent of the models of the proper functions. We have found:

(1) The overlapping integral is <u>convergent</u> if the two Weinberg sum rules are true.

(2) The nested divergence <u>cannot</u> be made finite. The integral diverges because the A_1^+-A_1^0 mass difference is divergent to order e^2 in this theory.

(3) The model-dependent integral converges in the algebra of fields, i.e., where the proper functions have the minimum momentum dependence consistent with the Ward identities. Thus this is the best possible result barring unforeseen cancellations in models which are superficially more divergent than the algebra of fields. We have thus been able to conclude that the fourth-order pion electromagnetic mass difference for zero-mass pions is logarithmically divergent in the algebra of fields.

---

*Massachusetts Institute of Technology, Cambridge, Mass.

AN I = 1 $\pi\pi$ SUM RULE AND THE DERIVATIVE OF THE S-WAVE AMPLITUDES

S. Y. Chu* and B. R. Desai*

A sum rule for the I = 1 $\pi\pi$ amplitude is written at the symmetry point $s = t = u = \frac{4}{3} m_\pi^2$, under the assumption that $\partial A^2(t, V)/\partial V$ satisfies an unsubtracted fixed-t dispersion relation, where t and V are the energy- and momentum-transfer variables. The I = 0 and I = 2 derivatives $\partial A^0/\partial t$ and $\partial A^2/\partial t$ are then obtained from crossing conditions at the symmetry point. The sum is very rapidly convergent. The Weinberg-Tryon estimates at S-wave amplitudes obtained from current algebra, and small negative I = 0 scattering lengths are both consistent with the sum rule.

COMPTON-SCATTERING SUM RULES

G. C. Fox and D. Z. Freedman†

We have tested all finite-energy sum rules for Compton scattering. We have also tested conspiracy, current algebra, and factorization of the ρ, A_2, P, and P' residues.

FINITE-ENERGY SUM RULES AND THE PROCESS $0^- + 0^- \rightarrow 0^- + 0^-$

Christoph Schmid and Joel Yellin

We consider elastic scattering of pseudoscalar mesons from the point of view of finite-energy sum rules (FESR). We examine the consistency requirements of the system and the implied algebraic structure. The connection with models for meson-meson scattering recently proposed is made explicit.

PION CONSPIRACY AND CONTINUOUS-MOMENT SUM RULES

Robert L. Thews

Continuous-moment finite-energy sum rules have been evaluated for charged-pion photoproduction. The low-energy fit of Born terms + background + resonances by Walker was used, along with the high-energy pion conspiracy model. Consistent results were obtained for positive moments $0 \leq \delta \leq 5$, where the Born terms alone contribute ~90% of the integral. In the negative moment region $-1 < \delta \leq 0$, the sum rules are not satisfied, due mainly to a large contribution from the resonances. The discrepancy is large enough so that changes in the resonance parameters are not likely to satisfy the sum rules and still fit the low-energy data.

CONNECTION BETWEEN OCTET DOMINANCE AND EXCHANGE DEGENERACY

Huan Lee

It is well-known that in a reaction with prominent resonances in the u channel but not in the s channel, finite-energy sum rules (FESR) would imply exchange degeneracy for the leading t channel Regge trajectories. We have investigated the SU(3) generalization of this idea. Upon assuming octet dominance in the pseudoscalar-meson–pseudoscalar-meson scattering, we found that consistency conditions from FESR required that the trajectories of vector nonets be exchange-degenerate with those of tensor nonets.

---

*University of California, Riverside.
†State University of N. Y., Stony Brook, N. Y.

The absence of the resonances of 27 and 10 representation in the 0^--0^- scattering need not be assumed. This conclusion follows from the assumption that the trajectories of 27 and 10 mesons lie much lower than the 8 mesons. In the case of pseudoscalar meson-baryon scattering and baryon-baryon scattering, the above result leads to the prediction of the absence of 27 resonances. (At least they must couple weakly to the lowest open channels, if they exist at all.)

While all these results can be obtained from a quark model, we feel it is more satisfactory not to commit ourselves to it. Further work is in progress.

PHENOMENOLOGICAL LAGRANGIAN FOR HADRONS

S. Gasiorowicz

A phenomenological Lagrangian involving spin-0 and spin-1 particles has been constructed. The Lagrangian consists of a term invariant under $SU(3) \times SU(3)$ and symmetry-breaking terms. The symmetry-breaking terms are required to preserve vector field-current proportionality and to lead to PCAC as far as possible. Preliminary results indicate that PCAC must be broken for the 9th meson in order to split the π and η' masses. The vector and axial-vector mesons can have their masses split by an interaction term whose magnitude could in principle be determined from the A_1 decay characteristics.

Work is also being done on an attempt to obtain a nonlinear realization with $\langle \sigma_8 \rangle_0 \neq 0$, a condition necessary to split f_K and f_π.

CALCULATION OF STRONG-COUPLING-CONSTANT SHIFTS

M. K. Au-Yang

An attempt is made to calculate the strong-coupling-constant shifts due to mass splittings in the baryon octet and in the meson octet. The shifts from the exact SU(3) values are again expressed in terms of sidewise dispersion integrals. Evaluations of these integrals form the central part of the problem and are now underway.

CALCULATION OF THE COUPLING CONSTANTS $g^2_{\Lambda KN}$ AND $g^2_{\Sigma KN}$ USING KAON-NUCLEON DISPERSION RELATIONS

Terence W. Rogers*

We apply forward kaon-nucleon dispersion relations to determine whether the known energy dependence of the low-energy Kp elastic-scattering amplitude uniquely and consistently prescribes the coupling constants $g^2_{\Lambda K^- p}$ and $g^2_{\Sigma^0 K^- p}$.

In one application we check the consistency of the multichannel effective-range continuation below the physical threshold. We evaluate the dispersion relation for several different values of the energy near threshold, and thus obtain several different estimates of the coupling constants. For a consistent extrapolation below threshold, we ask that these estimates are the same to within experimental error. We find that this is not true using the present multichannel effective-range extrapolation.

In the second application of the dispersion integrals, we find bounds on the coupling constants without using a model for the unphysical absorptive part. The only assumption is

*Harkness Fellow of the Commonwealth Fund.

that the unphysical absorptive part is nonnegative. This enables us to put bounds on the energy dependence of the unknown unphysical integral, and hence to put bounds on the coupling constants.

DECAYS OF NEUTRAL PSEUDOSCALAR MESONS INTO LEPTON PAIRS

C. Quigg and J. D. Jackson

We have calculated the branching ratio $\Gamma(P \to \ell^+\ell^-)/\Gamma(P \to \gamma\gamma)$ to lowest contributing order in quantum electrodynamics, using a vector-meson model for the pseudoscalar-meson form factor. The processes $\eta \to \mu^+\mu^-$, $\eta \to e^+e^-$, $K_2^0 \to \mu^+\mu^-$, $K_2^0 \to e^+e^-$, and $\pi^0 \to e^+e^-$ have been treated, and our results have been compared with those of previous calculations.

ZERO-MASS BOSONS IN S-MATRIX THEORY

Farzam Arbab and Richard C. Brower

We describe the soft coupling of zero-mass bosons to other particles, by considering the limit of a theory with a massive boson. With the standard S-matrix assumptions of analyticity and crossing for four-body helicity amplitudes, we demonstrate generally that in the limit of zero mass, a vector boson (1^-) couples to a conserved charge and a 2^+ boson couples to the inertial mass. Bosons of other spin-parity combinations (with the exception of zero spin) have no zero mass, soft coupling. With this technique, we not only give a pedagogically interesting solution to gauge invariance and kinematics of zero-mass particles, but also suggest new applications to small-mass integral spin systems. We speculate on the application of this technique to such problems as ρ universality, the Adler-Weisberger relation, and the universality of leptonic couplings in a vector or axial-vector state.

LOW-ENERGY THEOREMS AND THE POMERANCHUK TRAJECTORY FOR COMPTON SCATTERING

Farzam Arbab* and Richard C. Brower

We have extended to Compton scattering our earlier study of the photon as the zero-mass limit of a massive photon.[1] As in our earlier application to photoproduction amplitudes, the result is a gauge-invariant theory with the correct kinematical singularities. In this application to Compton scattering off pions, we derive the low-energy theorems. We also study this limit for Reggeized amplitudes, and discover a smooth continuation in the mass of the photon for the Pomeranchuk exchange amplitude. That is, the normal Pomeranchuk without fixed poles or singular residues for a massive photon is smoothly continued into a Pomeranchuk that contributes to forward elastic Compton scattering. The significance of this observation for the vector dominance model is considered.

STRONG π-α SCATTERING WITH ELECTROMAGNETIC CORRECTIONS

R. Christensen

The field theoretic equivalent potential model of Charap and Fubini, as extended by Balazs and Finkelstein, has been applied to the problem of pion-alpha scattering. The result-

*Brookhaven National Laboratory.

1. Farzam Arbab and Richard C. Brower, Zero Mass Bosons in S-Matrix Theory, Lawrence Radiation Laboratory report UCRL-18436, and Phys. Rev. (to be published).

ing potential is compared to the Kisslinger potential. The lowest-order electromagnetic corrections to the equivalent potential model are estimated. The sensitivity of the corrected potential, and hence of the pion charge radius, is then studied as a function of changes in the dynamical input.

ANALYSIS OF π-He SCATTERING FOR THE PION ELECTROMAGNETIC FORM FACTOR

C. T. Mottershead

Analysis of the $\pi^{\pm}$-He^4 scattering data for the pion charge radius has been completed. The method of analysis based on boundary conditions near the nuclear surface has been effective in reducing the model dependence of the result. In the course of the analysis, it has been found that the Kisslinger model of pion-nucleus interactions may not be directly applied to helium. A detailed report on this work is near completion.

T PRODUCTS AND SPECTRAL-FUNCTION SUM RULES IN A THEORY OF CURRENTS

Willy Bierter* and Khalil M. Bitar†

We present a new method for deriving spectral-function sum rules in a theory of currents. The Fourier transform $M_{\mu\nu}^{ab}(q)$ of the time-ordered product of two currents $J_{\mu}^{a}(x)$ and $J_{\nu}^{b}(0)$ between two arbitrary states is studied. In a theory of currents, where the Hamiltonian H is known, $M_{\mu\nu}^{ab}(q)$ can be expressed as a sum of terms, each of which is given by well-specified equal-time commutators. We have applied this method to Sugawara's theory[1] and have obtained the Weinberg sum rules along with higher-moment sum rules. These techniques are especially useful for studying theories with symmetry breaking.

ON INTERACTING LOCAL QUANTUM FIELDS DESCRIBING MANY MASSES AND SPINS

Willy Bierter* and Khalil M. Bitar†

We have investigated the possible restrictions of locality on interacting quantum fields which create or destroy many-particle states with different masses and spins. First we studied the vacuum expectation value of the commutator (or anticommutator) of two Heisenberg fields. By demanding that these fields transform as representations of the homogeneous Lorentz group and by using the CPT theorem, we have proved that locality gives no relations between the different spectral functions, and that the relations between the masses as functions of the spin are the same as those found by Abarbanel and Frishman[2] for free fields. With the help of the Yang-Feldman equations, we then studied the problem by using perturbation theory. We found that the demand of locality at each order in perturbation theory, in a manner consistent with the general results found above, imposes restrictions on the possible forms of these interactions.

---

*Swiss National Fellow.
†University of California, Berkeley.

1. H. Sugawara, Phys. Rev. 170, 1659 (1968).
2. H. D. I. Abarbanel and Y. Frishman, Phys. Rev. 171, 1442 (1968).

CROSSING MATRIX FOR THE HELICITY AMPLITUDES OF a + b → 1 + 2 + 3

Chih Kwan Chen and Kuo-hsiang Wang

With the conventional definition of the helicity states, we worked out the crossing matrix for the process a + b → 1 + 2 + 3. Comparing with Capella's works,[1] we found that our crossing matrices have phase factors that are not present in his. Upon examining the differences between the definitions of the conventional helicity states and the CMN helicity states adopted by Capella, we found:

(1) CMN helicity states depend on the reference frame and the channel chosen, but the conventional helicity states do not.

(2) In the center-of-momentum frame of the direct channel, these two definitions are the same in the two-body to two-body scattering process but they differ by a z-direction rotation in the two-body to three-body scattering process.

(3) In the center-of-momentum frame of the cross channel, these two definitions differ by a complex Lorentz transformation.

$^1G_4$ NUCLEON-NUCLEON PHASE SHIFT AND THE SIGMA MESON

Judith Binstock

The contribution to spin-singlet nucleon-nucleon scattering from the crossed two-pion-exchange diagram was calculated by means of a zero-parameter equivalent-potential model. It was shown that the potential resembles the Yukawa potential for an I-spin-zero scalar "sigma" of mass between two and three pion masses, and of nucleon-sigma coupling constant with a value required by the data. There is therefore no need for a "sigma" meson in nucleon-nucleon spin-singlet scattering.

Adding the one-pion-exchange Yukawa potential to the crossed two-pion-exchange potential yields a $^1G_4$ phase shift which agrees with the data within experimental errors, up to 300-MeV laboratory kinetic energy.

ANALYTICITY IN GENERAL FIELD THEORY

Jacques Bros

A study of the analyticity properties implied by the general Bethe-Salpeter equation has been completed. In this work it has been shown that an analytic solution of the Bethe-Salpeter equation can always be defined, after a suitable regularization, under the general assumptions of quantum field theory (locality and spectrum). This solution is analytic in the primitive domain of the four-point function and under additional assumptions, one can prove that it is two-particle irreducible. As a consequence, one proves the meromorphic continuation of the amplitude in a two-sheeted Riemann surface over a domain which contains the "elastic part" of the physical region.

DERIVATION OF THE CUTKOSKY FORMULA

Joseph Coster* and Henry P. Stapp

A general formula for the discontinuity of the S matrix around a physical-region singularity has been derived. The discontinuity is given by a Cutkosky-type formula obtained by

1. A. Capella, Nuovo Cimento 56A, 701 (1968).

*Western Illinois University, Macomb, Illinois.

replacing each vertex of the Landau diagram corresponding to the singularity by the corresponding S matrix (evaluated in the physical region), and replacing the set of lines α joining each pair of vertices by S_α^{-1}, where S_α is the restriction of S to the space corresponding to the set of lines α. The derivation is from S-matrix principles. A similar formula originally obtained by Cutkosky in perturbation theory was ambiguous because the sheet upon which the occurring functions were to be evaluated was not specified.

MACROSCOPIC CAUSALITY AND ANALYTICITY PROPERTIES OF THE S MATRIX

D. Iagolnitzer* and H. P. Stapp

The normal analytic structure of the physical-region S matrix is this: The singularities are confined to positive-α Landau surfaces, and near these surfaces the scattering function is the limit of an analytic function from a certain well-defined direction. This normal analytic structure, which was first suggested by perturbation theory, has been shown to be equivalent to a condition of macroscopic causality, which states that in an appropriate classical macroscopic limit all transition amplitudes fall off in the way indicated by classical arguments. This macroscopic causality condition is formulated using only mass-shell concepts. It thus provides a physical basis for analyticity properties of the S matrix that does not depend on the unphysical abstraction of space-time points.

WEAK ASYMPTOTIC CAUSALITY OF THE HAAG-RUELLE S MATRIX

David N. Williams

C. Chandler and H. P. Stapp, and D. Iagolnitzer and H. P. Stapp, have formulated and exploited some concepts of asymptotic causality for the S matrix. These concepts consist of the vanishing in the limit of the transition matrix element for a class of space-time configurations of "in" and "out" particles, either faster than any inverse power, or exponentially, respectively, in the parameter corresponding to a dilation of the geometry as the dilation goes to infinity.

The simplest class of these laws asserts the asymptotic vanishing of transition amplitudes for processes that violate elementary notions of causality, where outgoing particles would have to emerge from regions far in the past of regions where incoming particles could have interacted. These are the laws of "weak asymptotic causality" (WAC). Earlier, I had proved that the Haag-Ruelle S matrix in Wightman field theory obeys those WAC laws where the decrease is faster than any inverse power of the dilation parameter. I have now proved that it also obeys the exponential WAC laws, and that moreover, earlier results of K. Hepp on the cluster-decomposition properties of the S matrix also extend to the exponential regime.

---

*Miller Postdoctoral Fellow, University of California, Berkeley.

II. NUCLEAR PHYSICS

SEPARABLE POTENTIAL MODELS OF THE NUCLEON-NUCLEON INTERACTION

T. R. Mongan

Four different separable potential models of the nucleon-nucleon interaction have been fitted to low-energy parameters and phase-shift data.

AVERAGE NUCLEAR PROPERTIES

William D. Myers

Work has continued on the investigation of properties of finite nuclei on the basis of the droplet model. Excellent agreement has been obtained between our work and Hartree-Fock calculations performed at Rice University by Prof. Sigurd Köhler. In addition, our prediction that the symmetry energy coefficient of nuclear matter is larger than previously suspected has received support from C. W. Nestor.[1]

AVERAGE NUCLEAR PROPERTIES

William D. Myers and W. J. Swiatecki

Earlier work[2] has been applied to a discussion of the charge distribution sizes of seven nuclei between Ca and Bi for which electron-scattering experiments are available. The anomalous isotopic variation of size for the triplet $^{40, 44, 48}$Ca has also been investigated in detail. A partial explanation of the anomaly appears to be provided by the "droplet model" formulated in the above reference.

STABILITY OF SUPERHEAVY NUCLEI AND THEIR POSSIBLE OCCURRENCE IN NATURE

Chin-Fu Tsang and S. G. Nilsson*

We have calculated the ground-state masses of all even-even nuclei from the rare earth elements to the actinides, as well as those in the unknown superheavy region of elements, i.e., elements with proton number around 114.

In addition we have studied the alpha and spontaneous-fission lifetimes of these superheavy nuclei and tested for their beta stability. It turns out that several of these nuclei might have lifetimes comparable to the age of the universe. This raises the exciting possibility of finding them in earthly matter and in the primary cosmic radiation. Preliminary searches in earthly matter by S. G. Thompson and his group at the Nuclear Chemistry Division gave negative results. A search in the cosmic rays is being made by P. H. Fowler and P. B. Price, who are still analyzing the data from their recent balloon experiments.

---

1. C. W. Nestor, private communication.
2. William D. Myers, Average Nuclear Properties (Ph. D. thesis), UCRL-18214, May 1968.

*Lund, Sweden.

III. ACCELERATOR THEORY

ANALYSIS OF THE ELECTRON-RING ACCELERATOR

L. Jackson Laslett and Andrew M. Sessler

Members of the Theoretical Physics Section have supported the Electron-Ring Accelerator project by theoretical and computational studies. A portion of this work has been concerned with the operation of the Compressor II unit that has been set up at the Livermore site, and the remainder of the effort has been directed to consideration of problems relevant to the further development of the program.

An important part of the work relating to Compressor II concerned the search for a time-dependent program of correction currents in the coils of this unit that would serve to avoid values of the field index where resonant loss of the ring beam could occur. More broadly, this aspect of the computational work provided guidance to the experimentalists in interpreting the phenomena observed at various current values in the coils of the compressor.

The longer-range support activities of the theoretical group have been concerned with the study of static-field compression, the design of possible extraction and acceleration systems for a projected "Compressor III" device, investigation of various "image field" effects that arise when an intense beam is close to one or more boundary surfaces, and estimation of the radiation losses that an electron ring would experience in traversing a periodic cavity structure that forms part of an acceleration column.

TRANSVERSE SPACE-CHARGE EFFECTS IN CIRCULAR ACCELERATORS

Frank Sacherer

The particles in an accelerator interact with one another by electromagnetic forces and are held together by external focusing forces. Such a many-body system has a large number of transverse modes of oscillation (plasma oscillations) which can be excited at characteristic frequencies by errors in the external guide field. For simplicity we have considered only one-dimensional beams that are confined by harmonic potentials, and only small-amplitude oscillations. The linearized Vlasov and Poisson equations have been used to find the twofold infinity of normal modes and eigenfrequencies for the stationary distribution that has a uniform charge density in real space. In practice, only the low-order modes (the dipole, quadrupole, sextupole, and one or two additional modes) will be serious, and the resonant conditions for these modes have been located on a tune diagram. These results, which are valid for all beam intensities, have been compared with the known eigenfrequencies for the stationary distribution that has uniform particle density in phase space, and have been extrapolated to the Gaussian distribution observed in the Brookhaven AGS.

IV. ATOMIC PHYSICS

REARRANGEMENT COLLISIONS BETWEEN SLOW ATOMS AND IONS

J. C. Chen* and K. M. Watson

The eikonal approximation is used to describe mass-center motion in atomic collisions. With the use of eikonal wave functions the three-dimensional integrals of perturbation theory are reduced to one-dimensional path integrals. The Principle of Least Action provides a convenient variational technique for evaluating the eikonal, radii of curvature of surface of constant eikonal, etc.

This continues previous work on the theory of rearrangement collisions.

IONIZATION OF A HEAVILY IONIZED ATOM BY ELECTRON IMPACT

Mehdi Golshani

A simple model is used to calculate the cross section for further ionization of a heavily ionized atom by electron impact. In the distorted wave approximation the scattering amplitude is reduced to a six-dimensional integral. Using the eikonal approximation, we can reduce this to a two-dimensional integral. An attempt is being made to see if the stationary-phase method is justified for the remaining two-dimensional integral.

V. PLASMA PHYSICS

QUASILINEAR EVOLUTION OF THE WEIBEL-KAHN INSTABILITY

Norman Albright

The investigation of the Weibel-Kahn plasma instability mentioned in the preceding semiannual report has continued. We have found that the wave spectrum decays within the quasilinear approximation. Computer studies have been made using a two-temperature model for the particle distribution function. The simultaneous evolution of the wave spectrum and the temperature anisotropy has been calculated. These calculations yielded asymptotic expressions for the behavior of the plasma as it approaches equilibrium.

INFLUENCE OF FLUCTUATING FORCES AT ORBIT EXTREMA

Blake R. Patterson

The effect of random forces which act on a classical particle oscillating in a potential well at its extremal positions is being studied using the action-angle formalism. It is expected that such forces will strongly influence the particle's diffusion since the particle spends most of each period at the limits of its orbit. It is hoped that this analysis will prove useful in describing bounce resonance phenomena in the ionosphere.

INTERACTION OF INTENSE, RELATIVISTIC ELECTRON BEAMS WITH SELF-GENERATED PLASMAS

Sidney D. Putnam

An investigation is under way to analyze the interaction of intense, pulsed, relativistic electron beams with self-generated plasmas in a closed cylindrical drift chamber. Beam-

*University of California, San Diego.

current values and pulse widths of interest are such that beam self-fields and plasma magnetic neutralization are important. The electromagnetic fields have been obtained in terms of the beam-current profiles for cases where the plasma conductivity σ is constant and when $\sigma = C_1(1 - e^{-\alpha u}) + C_2$, with α, C_1, and C_2 constants, and u the distance behind the beam head. The aim is to couple beam-orbit equations to the electromagnetic field equations to obtain criteria for beam pinching and drifting in terms of the induced plasma conductivity parameters. Ultimately the effects of plasma damping on transverse beam stability will be investigated.

VI. MISCELLANEOUS THEORETICAL PHYSICS

VARIATIONAL PRINCIPLES FOR INTEGRALS

Charles Schwartz

An exploration has been made of new analytical-numerical techniques which might be useful in the evaluation of integrals encountered in high-order Feynmann diagrams. Some early results are contained in the paper "Variational Principles for Integrals." Further work will be forthcoming.

THE EQUIVALENCE PRINCIPLE AND DYNAMICS

Daniel Greenberger*

The equivalence principle is all that is needed to explain the gravitational red shift. However the red shift implies that two distant observers who see the same local laws of physics can have clocks that run at different rates. This fact allows us to construct a canonical formalism with proper time as an independent dynamical variable. Conjugate to this is the rest mass of the system. This in turn implies an uncertainty principle between rest mass and proper time, which is different from the uncertainty between energy and coordinate time, as it refers to clock readings of one event in two coordinate systems.

The possibility also exists that the entire usual scheme for quantizing dynamical systems must be revamped to discuss gravitational systems.

SOME IMPLICATIONS OF A NEW SOURCE OF COSMIC-RAY MUONS

S. Pakvasa†

Recently the Utah cosmic-ray group presented evidence for a new source of cosmic-ray muons at muon energies $> 10^3$ BeV. The theoretical implications of this work and further experimental possibilities have been studied.

PERTURBATION THEORY FOR MAGNETIC MONOPOLES

Arnulf Rabl

The Feynman-Dyson perturbation theory has been applied to Schwinger's model of the monopole. The propagator for photons between electric and magnetic charges is found to be $D^{AB}_{\mu\nu}(k) = (k^2 + i\epsilon)^{-1}(\epsilon_{\mu\nu\lambda\kappa} n^\lambda k^\kappa)/(n\cdot k)$, n being the unit vector in the direction of the singularity

*City College of New York, New York.
†University of Hawaii, Honolulu. This work has been carried out in collaboration with J. D. Bjorken, W. Simmons, and S. F. Tuan of the University of Hawaii.

line. Since the exact theory is independent of n, one might try to obtain a manifestly covariant perturbation expansion by averaging over all directions of n. However, with such a procedure we have found that the Born term fails to reduce to the known nonrelativistic limit.

PUBLICATIONS AND PAPERS

1. Stuart D. Anderson, An Effect of the Existence of an Elementary Quark on High Energy Scattering, Ph. D. thesis, UCRL-18251, May 1968; Phys. Rev., to be published.
2. F. Arbab and R. C. Brower, Zero Mass Bosons in S-Matrix Theory, UCRL-18436, August 29, 1968; submitted to Phys. Rev..
3. K. Bardakci and M. B. Halpern, Canonical Representations of Sugawara's Theory, Phys. Rev. 172, 1542 (1968).
4. K. Bardakci and M. B. Halpern, Theories at Infinite Momentum, UCRL-18360, July 1968; Phys. Rev., to be published.
5. E. L. Berger, Reggeized Double Peripheral Model Analysis of Three-Body Final-State Processes; Application to $pp \rightarrow p\pi^-\Delta^{++}$ at 28.5 GeV/c and Other Reactions, UCRL-18472, October 1968; submitted to Phys. Rev.
6. Willy Bierter, S-Operator Theory of Weak Interactions, UCRL-18147, March 1968; Nuovo Cimento 56A, 253 (1968).
7. W. Bierter and K. M. Bitar, T-Products and Spectra Function Sum Rules in a Theory of Currents, UCRL-18446, September 1968.
8. W. Bierter and K. M. Bitar, On Interacting Local Quantum Fields Describing Many Masses and Spins, UCRL-18361, July 1968; Nuovo Cimento, to be published.
9. R. Brower and J. W. Dash, Pion Photoproduction, NN Scattering, and Photoproduction Sum Rules, UCRL-18199, April 18, 1968.
10. Geoffrey F. Chew, Bootstrap: A Scientific Idea?, Science 161, 762 (1968).
11. G. F. Chew and A. Pignotti, A Multiperipheral Bootstrap Model, UCRL-18275, June 1968; Phys. Rev., to be published.
12. J. Coster and H. P. Stapp, Derivation of the Cutkosky Formula, UCRL-18512, October 10, 1968; to be submitted to Phys. Rev.
13. Jan W. Dash, Applications of the Lorentz Group to Regge Pole Analysis of Pion Photoproduction, Ph. D. thesis, UCRL-18377, August 1968.
14. John Harte, Asymptotic Vertex Function in a Crossing Symmetric Bootstrap Model of the Hadrons, UCRL-18122, February 1968; Phys. Rev., to be published.
15. John Harte, Possible Enhancement of Two-Photon Exchange Effects in Large-Momentum-Transfer Electron-Proton Scattering, UCRL-18083, February 1968; Phys. Rev., to be published.
16. William B. Kaufmann, Numerical Solutions of the Bethe-Salpeter Equation, UCRL-18220, May 1, 1968; submitted to Phys. Rev.
17. N. N. Khuri, Sums of Direct Channel Regge Pole Contributions and Crossing Symmetry, UCRL-18426, August 1968; Phys. Rev., to be published.
18. T. R. Mongan, Separable Potential Models of the Nucleon-Nucleon Interaction, UCRL-18501, October 1968.
19. W. D. Myers and W. J. Swiatecki, Average Nuclear Properties, UCRL-18214, May 1968, submitted to Nucl. Phys.

20. C. Quigg and J. D. Jackson, Decays of Neutral Pseudoscalar Mesons into Lepton Pairs, UCRL-18487, September 1968.
21. Arnulf Rabl, Cancellation of Divergences in Reggeized Electromagnetic Mass Differences, UCRL-18343, July 8, 1968; Phys. Rev., to be published.
22. Arnulf Rabl, Perturbation Theory for Magnetic Monopoles, UCRL-18485, September 23, 1968; submitted to Phys. Rev.
23. Terence W. Rogers, Calculation of the Coupling Constants $g^2_{\Lambda KN}$ and $g^2_{\Sigma KN}$ Using Kaon-Nucleon Dispersion Relations, UCRL-18481, September 23, 1968; submitted to Phys. Rev.
24. Frank Sacherer, Transverse Space Charge Effects in Circular Accelerators, Ph. D. thesis, UCRL-18454, October 1968.
25. Charles Schwartz, Variational Principles for Integrals, UCRL-18469, September 1968; submitted to J. Comput. Phys.
26. J. Shapiro and J. Yellin, A Model for $\pi\pi$ Scattering, UCRL-18500, September 1968; submitted to Phys. Rev. Letters.
27. J. C. Chen and K. M. Watson, Phys. Rev. 174, 152 (1968).
28. J. H. Weis, Conspiracy and Counterconspiracy in Equal-Mass Scattering, UCRL-18397, August 1968; Phys. Rev., to be published.
29. Warren Wollman, Quantum Mechanical Boltzmann Equation for a Gas with Rotational States, Ph. D. thesis, UCRL-18285, May 1968.

EXPERIMENTAL PHYSICS, GROUP A

Frank T. Solmitz in charge

On October 30, 1968, Luis W. Alvarez, who headed this group from its inception until earlier this year, and who has always served as a great inspiration, innovator, and guide in both the spirit and techniques of experimental physics, received the following telegram:

"The Royal Academy of Sciences today awarded you the 1968 Nobel Prize for physics for your decisive contributions to elementary particle physics; in particular the discovery of a large number of resonance states made possible through your development of the technique of using hydrogen bubble chamber and data analysis. Our very warm congratulations. . . . "

I. BUBBLE-CHAMBER EXPERIMENTS

A. ASSOCIATED PRODUCTION EXPERIMENT

Between mid-1960 and mid-1961, the 72-inch hydrogen bubble chamber was exposed to π^+ and π^- beams at six laboratory-system momenta from 1.030 to 1.325 GeV/c. About 1000 000 pictures were taken, of which 3/4 have been analyzed at Berkeley and the remainder at the University of Wisconsin and Purdue, Johns Hopkins, and Duke Universities. Numerous results from this experiment have been published. In late 1964 an additional 110 000 pictures of π^- incident at five different momenta from 0.910 to 1.030 GeV/c were taken for analysis at Berkeley.

Hyperon Production and Decay

Frank S. Crawford, Jr., and Joseph C. Doyle

We are continuing our detailed study of $\pi^- p \rightarrow \Lambda K^0$ at seven beam momenta between 940 and 1170 MeV/c. We are performing a phase-shift analysis of this process.

B. K63 EXPERIMENT

The 72-inch hydrogen bubble chamber was exposed to a K^- beam having laboratory momenta of 1.7, 2.1, 2.47, 2.59, 2.64, and 2.73 GeV/c, totaling 30 events/μb. Exposures with deuterium were taken at 2.1 and 2.7 GeV/c, and a run was made at 2.1 GeV/c with a lead plate in the chamber to convert γ rays and thus detect neutrals. The film was taken between mid-1963 and early 1965, and as of May 1968, more than 300 000 events were measured. Measurement is now nearly completed.

Production and Decay of Cascade Hyperons

Philip M. Dauber and Richard Muller

A systematic study of production and decay of Ξ^- and Ξ^0 has been undertaken. The sample consists of about 3200 Ξ^- and 1000 Ξ^0. Differential cross sections and polarizations have been measured for $\Xi^- K^+$ and $\Xi^0 K^0$ production, and a partial-wave analysis of $\Xi^- K^+$ from 1.2 to 2.7 GeV/c is being performed, including data on $K^- n \rightarrow \Xi^- K^0$ from the deuterium run. The data are also being interpreted in terms of a baryon-exchange mechanism. Evidence has been obtained for Y^* formation with subsequent decay into ΞK. A study of resonance production

is in progress. Study of the production and decay distributions of Ξ^*, including a complete density-matrix determination, should provide new checks of the baryon-exchange hypothesis.

An analysis of the normal $\Lambda\pi^0$ decay of Ξ^0 has been completed, including determination of lifetime and decay-asymmetry parameters. Values of $\tau_{\Xi^-} = (1.61 \pm 0.04) \times 10^{-10}$ sec and $\tau_{\Xi^0} = (3.07\,^{+0.22}_{-0.20}) \times 10^{-10}$ sec have been obtained. These values agree within one standard deviation with the $\Delta I = 1/2$ prediction $\tau_{\Xi^0} = 2\,\tau_{\Xi^-}$. The asymmetry-parameter determination has yielded $\alpha_{\Xi^-} = -0.391 \pm 0.045$, $\alpha_{\Xi^0} = -0.43 \pm 0.09$, $\Phi_{\Xi^-} = -14 \pm 11$ deg, and $\Phi_{\Xi^0} = 38 \pm 19$ deg, in agreement with the $\Delta I = 1/2$ rule and with time-reversal invariance.

A search for leptonic and $\Delta S = 2$ decay modes has been carried out. This search has yielded two unambiguous examples of $\Xi^- \to \Lambda^0 e^- \bar{\nu}$. These events enable us to quote a value for the branching fraction for this mode of $(1.0\,^{+1.3}_{-0.65}) \times 10^{-3}$.[1] No clear-cut examples of other unusual Ξ decays have been found, but the upper limits for the $\Delta S = 1$ and $\Delta S = 2$ leptonic and nonleptonic modes of both Ξ^- and Ξ^0 have been reduced to the 10^{-3} level.

Results of the general cascade analysis will be presented in a paper submitted to Physical Review. Results of the partial-wave analysis of ΞK and of a study of the Ξ^* production mechanism will be published separately. A paper dealing with interpretation of forward peaks in $\Xi^* K$ production and in other reactions with t-channel quantum numbers $S \geqslant 2$ or $I \geqslant 3/2$ is being prepared for submission to Physical Review Letters.

The Reaction $K^-p \to \bar{K}^0 n$ and $K^-p \to \Lambda\pi^0$

Stanley M. Flatté, Angela Barbaro-Galtieri, Robert D. Tripp, and Charles G. Wohl

Data analysis, including production-angle distributions, polarization, and total cross sections, has been completed at six incident K^- momenta: 1.7, 2.1, 2.47, 2.59, 2.64, and 2.73 GeV/c. Theoretical analysis is now under way.

The Decay $\omega \to \pi^+\pi^-$

Stanley M. Flatté

A phenomenological analysis technique is being developed for the study of two-pion mass spectra. The technique is applied to some published data on $K^-p \to \Lambda\pi^+\pi^-$ at 1.5 GeV/c which showed evidence for $\omega \to \pi^+\pi^-$, and to new data at 1.7, 2.1, and 2.6 GeV/c. The data contained twice as many $\omega \to \pi^+\pi^-\pi^0$ events as the old data.

Resonance Production in $K^-p \to \Sigma\pi\pi, \Sigma\pi\pi\pi$

Philippe Eberhard, Jerome H. Friedman, Morris Pripstein, and Ronald R. Ross

As part of an extensive analysis of resonance production in reactions of the type $K^-p \to \Sigma\pi\pi$ and $K^-p \to \Sigma\pi\pi\pi$ around 2.6 GeV/c, we have made a detailed study of $Y^*(1660)$ production characteristics in these various reactions. In analyzing the quasi-two-body reaction, $K^-p \to Y^*(1660)^+ + \pi^-$, we have found the surprising result that the $Y^*(1660)$ production distributions in the $\Sigma\pi\pi$ and $\Sigma\pi\pi\pi$ final states are significantly different from one another. This means that the relative decay branching ratio $Y^*(1660) \to \Sigma\pi\pi / Y^*(1660) \to \Sigma\pi$ apparently varies with the $Y^*(1660)$ production angle.

---

1. J. R. Hubbard, J. P. Berge, and P. M. Dauber, Phys. Rev. Letters 20, 465 (1968).

This phenomenon can be explained by the presence of two resonances—one which is produced at very low momentum transfers decaying in this case primarily to $\Sigma\pi\pi$, and a second resonance decaying primarily to $\Sigma\pi$ which is also produced peripherally but at higher momentum transfers. Another explanation of this phenomenon is that the $Y^*(1660)$ production in one of the modes is greatly distorted as a result of a very peculiar interference with the background. We have made a detailed study of background effects, and we conclude that it is very unlikely that such effects can be responsible for the phenomenon we have observed.

Thus, the most probable explanation of the $Y^*(1660)$ production characteristics in our data is that there are two $Y^*(1660)$ resonances with approximately the same mass and width. This would then also explain the variation in the $\Sigma\pi\pi/\Sigma\pi$ relative branching ratio of the $Y^*(1660)$ seen in other production experiments at different beam energies.

We have reported preliminary results of this investigation at the International High-Energy Physics Conference at Vienna, and we are now preparing a paper for publication.

Study of the Reaction $K^-p \to \Sigma^\pm \pi^\mp$

Philip M. Dauber and Angela Barbaro-Galtieri

An analysis of charged $\Sigma\pi$ production by K^- on protons from 2.1 to 2.7 GeV/c is in progress. Total and differential cross sections as well as Σ^+ polarizations are being measured. The data will be fitted to a model including s-channel production of resonances and Regge poles in the t and u channels. The model will be extended below 2.1 GeV/c by using data obtained at Lawrence Radiation Laboratory and University of California, Los Angeles.

The Reaction $K^-p \to K^*_{1/2}(892)\, N^*_{3/2}(1238)$

Jerome H. Friedman and Ronald R. Ross

The reaction $K^-p \to K^*_{1/2}(892)\, N^*_{3/2}(1238)$ has been studied at 2.1 and 2.6 GeV/c. The total cross section, differential cross section, and decay correlation parameters have been measured as a function of production angle, and the results have been compared with the absorptive peripheral model, the Regge pole model, and the quark model.

Study of K^-p Four-Pronged Reactions

Jerome H. Friedman and Ronald R. Ross

Approximately 48 000 K^-p interactions producing four charged particles have been measured on the spiral reader. These events have been analyzed with the aid of the Alvarez group data-reduction computer codes. Analysis of final-state interactions is in progress.

K^- Interactions in Deuterium

Angela Barbaro-Galtieri, Maxine Matison, and Alan Rittenberg

The deuterium film of path length 5 events/μb, equally divided between 2.1 and 2.64 GeV/c, has been scanned. Measurements have been made on Franckensteins and the spiral reader of 50 000 events of the following topologies: three or four prongs with or without a secondary decay, and one to four prongs with a vee. All ambiguities have been looked at on the scanning table, and the data are now in the final analysis stage.

Search for a T = 2 Hyperon Resonance

This part of the experiment recently completed, was done in collaboration with Drs. G. B. Chadwick, Z. G. T. Guiragossian, and E. Pickup of SLAC. No evidence for T = 2 resonances with mass < 2300 MeV in the $\Sigma^-\pi^-$ and $\Sigma^-\pi^-\pi^0$ final states was found in the data. In the $\pi^+\pi^-\pi^0$ final state, there is evidence for production of η' decaying into $\pi^+\pi^-\gamma$.

Search for T = 3/2 Resonances in the $K\pi$ System

Here, too, the evidence for a higher-isospin state is negative. The other mass combinations in three- and four-prong states are now being searched for production of other resonances.

C. K65 EXPERIMENT

During the period from August 1965 to October 1967, the 25-inch hydrogen bubble chamber was exposed to a K^- beam of about 400 MeV/c. Roughly 1.4 million pictures have been taken, 60 000 of which were in deuterium. The average track density was about 6 K^- per picture. All of the film has been scanned once, yielding 577 000 events. About 30 percent of the film has been scanned twice, and about 6 percent of the film has been scanned three times. A total of 410 000 measurements has been made. All events have been processed on the CDC 6600 computer, and the analysis is in progress.

Direct Evidence for the Multiplet Assignments of $\Lambda(1520)$ and $\Lambda(1405)$

Robert D. Tripp, Roger O. Bangerter, Angela Barbaro-Galtieri, and Terry S. Mast

A measurement has been made of the relative signs of the resonant $K^-p \to \Sigma\pi$ reaction amplitudes coming from partial waves corresponding to $\Sigma(1385)$, $\Lambda(1405)$ and $\Lambda(1520)$. From this it is shown that $\Lambda(1405)$ and $\Lambda(1520)$ are to be described as predominantly SU(3) singlets.

This work has been submitted to Phys. Rev. Letters.

Study of Σ Decay Parameters

Robert D. Tripp, Frank T. Solmitz, and Roger O. Bangerter

In order to measure the decay parameters γ_+^+, γ_-^-, β_+^+, and β_-^-, we have scanned and measured roughly 70 percent of our film for the reactions $\Sigma^\pm \to \pi^\pm n$, followed by $np \to np$. The β and γ are determined by the left-right asymmetry in the np scattering. We have analyzed about 2000 events of the above sequence of reactions and will publish the results soon.[1]

We have also analyzed the up-down asymmetry of about 100 000 Σ decays in order to determine the decay parameters α_+^+, α_0^+, and α_-^-.

Σ Interactions and Decays

Lawrence K. Gershwin

Σ^- Leptonic Decay

From the measurement of about 65 000 Σ^- decays, 50 have been found that are $\Sigma \to ne^-\bar{\nu}$. From the correlation of the direction of the electron with respect to the polarization of the Σ^-, one can determine the relative values of the axial and vector coupling constants. Final results

1. R. O. Bangerter et al., Decay Parameters for $\Sigma^+ \to n\pi^\pm$, paper presented at Heidelberg International Conference on Elementary Particles, 1967.

show reasonable agreement with Cabibbo theory.[1]

Σ^- Capture in Hydrogen

When Σ^- comes to rest in hydrogen, the reaction $\Sigma^- p \rightarrow \Sigma^0 n$ or $\Sigma^- p \rightarrow \Lambda n$ occurs. One can investigate the form of the matrix element for $\Sigma^- p \rightarrow \Lambda n$ by investigating the correlation of the Λ polarization with respect to the Σ^- polarization. About 700 such events have been analyzed; another 500 are expected.

Σ^- and Σ^+ Interactions

We can study $\Sigma^- p$ and $\Sigma^+ p$ interactions from 100 to 600 MeV/c incident Σ momentum. Due to the scarcity of events, probably only cross sections can be obtained. About 150 $\Sigma^- p \rightarrow \Sigma^0 n$ and $\Sigma^- p \rightarrow \Lambda n$ have been analyzed; another 75 are expected. $\Sigma^- p \rightarrow \Sigma^- p$ and $\Sigma^+ p \rightarrow \Sigma^+ p$ have not yet been measured; about 100 of each are present in our film.

$\Sigma^+ \rightarrow p\gamma$

About 50 events $\Sigma^+ \rightarrow p\gamma$ have been found. The decay asymmetry is measured and found to be -1.1 ± 0.55, whereas U-spin invariance would require that the asymmetry parameter be zero. The branching ratio $\Sigma^+ \rightarrow p\gamma / \Sigma^+ \rightarrow p\pi^0$ is also being studied.

Σ^+ Magnetic Moment

Terry S. Mast and Lawrence K. Gershwin

From an analysis of 39 000 decays of the type $\Sigma^+ \rightarrow p\pi^0$, we have made a determination of the Σ^+ magnetic moment of $\mu_{\Sigma^+} = 2.1 \pm 1.0$. A letter on the subject has been published.[2]

$K^- p \rightarrow \Lambda\pi^+\pi^-$ and $K^- p \rightarrow \Lambda$ + Missing Mass

Terry S. Mast, Angela Barbaro-Galtieri, and Robert D. Tripp

After measurement of most of the events of the type $K^- p \rightarrow \Lambda\pi^+\pi^-$ and a remeasurement of many events with unsatisfactory fits, we have a sample of 10 000 events. The events have been weighted to correct for scanning biases and escape loss, and an analysis of the amplitudes contributing to this reaction has been begun. Sixty thousand Λ-missing-mass events have been measured, and weights for scanning bias and escape loss have been determined. The polarization and angular distributions of the $\Lambda\pi^0$ part and those of the $\Sigma^0\pi^0$ part have been determined. The $\Lambda\pi^0$ channel is of particular interest, since it is a pure $I = 1$ state. We have also isolated a signal of some 260 events corresponding to the decay $Y_0^*(1520) \rightarrow \Lambda\gamma$. This is the first reported evidence for the electromagnetic decay of a hyperon resonance. The angular distribution and polarization of the Λ are consistent with a pure electric-dipole transition. The cross section yields a partial width of $0.15 \pm .03$ MeV for the decay. A letter on this subject has recently been submitted to Phys. Rev. Letters.[3]

Charge-Exchange ($K^- p \rightarrow \bar{K}^0 n$) and Elastic ($K^- p \rightarrow K^- p$) Reactions

Terry S. Mast, Roger Bangerter, Angela Barbaro-Galtieri, and Robert D. Tripp

The momentum range of the incident K^- has been extended up to 430 MeV/c. About 31 000 charge-exchange events have been measured with the spiral reader and the Francken-

1. Lawrence K. Gershwin et al., Phys. Rev. Letters 20, 1270 (1968).
2. Terry S. Mast et al., Phys. Rev. Letters 20, 1312 (1968).
3. T. S. Mast, M. Alston-Garnjost, R. O. Bangerter, A. Barbaro-Galtieri, L. K. Gershwin, F. T. Solmitz, and R. D. Tripp, Electromagnetic Decay of the $Y_0^*(1520)$, UCRL-18328 Rev., August 1968; to be published in Phys. Rev. Letters.

stein and processed through the programs SIOUX-ARROW. The production angular distribution has been analyzed in terms of Legendre polynomial coefficients (A_ℓ/A_0). An accurate measurement of the cross section and angular distributions will be available soon. The elastic events are necessary in order to compute the amplitudes of the two isospin channels. Altogether, 26 000 events of this type have been measured and processed. Their analysis is progressing.

Study of the Neutral K Meson

Bryan R. Webber, Frank T. Solmitz, Frank S. Crawford, Jr., and Margaret Alston-Garnjost

We have published a study of the time distributions of 242 leptonic neutral K decays. For the $\Delta S = \Delta Q$ parameter x, we have found $\mathrm{Re}(x) = 0.22^{+0.07}_{-0.09}$ and $\mathrm{Im}(x) = -0.08 \pm 0.08$. About sixty additional leptonic decays are being analyzed. We are also analyzing the time distribution of 57 three-pion decays of neutral K mesons, to test PC and CPT invariance in this decay mode.

D. π66 EXPERIMENT

Between February and August 1966, 665 000 pictures were taken of π^+ incident on deuterium in the 72-inch hydrogen bubble chamber. The momenta ranged from 1.1 to 4.2 GeV/c.

π^+d Interactions from 1.1 to 2.3 GeV/c

Maris A. Abolins,* Orin I. Dahl, Gerry Danburg, Donald Davies, and Robert Rader

The motivation for the 1.1- to 2.3-GeV/c experiment was the desire to study the production and decay of the I = 0 mesons η, ω, η', and Φ as a function of momentum near threshold; thus the major measuring effort has been directed at events that presumably involve π^+n interactions with the proton acting as a "spectator." To this end we have measured 130 000 four-prong events, 3000 five- and six-prong events, and 9000 events with neutrally decaying strange particles. A preliminary report on the production cross section and angular distribution of isoscalar mesons with a mass < 1 GeV was delivered at the Heidelberg Conference on Elementary Particles. A more comprehensive publication is being prepared.

π^+d Interactions from 2.8 to 4.2 GeV/c

Maris A. Abolins,* Orin I. Dahl, and Paul Hoch

More than 21 000 events involving a visible Λ^0 or K^0 decay produced by π^+ in the range 2.8 to 4.2 GeV/c colliding with deuterons have been measured and processed. Ionization selection criteria have been used to determine correct hypotheses. For the events measured on the spiral reader, this information was obtained directly from pulse heights; the Franckenstein-measured events were each individually inspected by trained technicians and physicists. Attention is presently being turned to $\Lambda K\pi$ final states in order to gain understanding of the production mechanisms for $Y_1^*(1385)$ over a wide energy range.

---

*Michigan State University, East Lansing.

Search for a $2\pi^0$ Resonance Near 730 MeV in π^+d Interactions

Robert J. Manning and Gerald A. Smith*

In an analysis of 229 000 pictures of π^+ at incident momenta of 1.1 to 2.3 GeV/c in the deuterium-filled 72-inch bubble chamber, we have identified 41 045 examples of the reaction $\pi^+d \rightarrow pp\pi^+\pi^-$. Cross sections at different center-of-mass energies have been determined by normalization to the reaction $\pi^+d \rightarrow pp\pi^0$ and using known cross sections for π^-p charge-exchange scattering. By using the maximum-likelihood fitting program MURTLEBURT, production percentages of the resonances ρ^0 and $N^{*++}(1238)$ have been calculated. A phase-shift analysis of the two-pion interaction is being attempted based on the method of Malamud and Schlein. Knowledge of the phase-shift solutions will permit comparison of our subtracted-neutrals mass distribution in the previously reported reaction $\pi^+d \rightarrow pp$ (neutrals) with the $2\pi^0$ mass distribution calculated from the phase shifts.

E. BP66 EXPERIMENT

Jared A. Anderson† and Dennis B. Smith

A 72 000-picture proton exposure was made in the Brookhaven National Laboratory 80-inch hydrogen bubble chamber in November 1966. Incident beam momenta were 13, 18, 21, 24, and 28.5 GeV/c, and roughly equal amounts of film were exposed at each of the five momenta. All scanning and nearly all measuring of this film have been completed. Topology cross sections have been determined, and a special ionization scan of approximately 4000 tracks is under way to complete the analysis of the center-of-mass momentum distributions.

We are using statistical-model parameterizations to fit the longitudinal and transverse center-of-mass momenta distributions. We find that we are able to separate the π^+ from the proton distributions without kinematic fitting of the events. We are studying the dependence of the parameters on the incident beam energy and the multiplicity of the interaction. Results of this work will be described at a meeting of the American Physical Society in December 1968.[1]

A group from Michigan State University led by Gerald A. Smith has completed the measurements of 33 000 two-pronged events from this exposure. The measurements were performed at LRL using the spiral reader. An analysis of these measurements is under way at Michigan State.

F. P67 EXPERIMENT

Antiproton Interactions in Hydrogen and Deuterium

Maris A. Abolins,* Alan Rittenberg, and Gerald A. Smith*

An experiment involving antiproton interactions in hydrogen and deuterium from 1.5 to 2.0 GeV/c is currently under way. This is a collaboration with the Michigan State group involving the Brookhaven National Laboratory 31-inch hydrogen bubble chamber and the Argonne National Laboratory 30-inch deuterium bubble chamber. Approximately 30 000 measurements of interactions in hydrogen have been completed at Michigan State University, and an analysis

---

*Michigan State University, East Lansing.
†Space Sciences Laboratory, Berkeley, California.
1. D. B. Smith, J. A. Anderson, J. Kirz, and R. Sprafka, Multiparticle Final States Produced in Proton-Proton Interactions between 13 and 28.5 GeV/c, UCRL-18523 Abstr., Oct. 1968.

of elastic scattering and isobar production was presented at the Vienna Conference. At LRL, approximately 120 000 interactions in deuterium have been measured, and analysis of the data is currently under way. The purpose of the experiment is to study resonance production in the direct channel as reported by previous experiments measuring total cross sections in hydrogen and deuterium.

G. D66 EXPERIMENT

Philippe Eberhard, Gerald R. Lynch, and Morris Pripstein

An exposure of approximately 210 000 pictures was taken in the 72-inch deuterium-filled bubble chamber with an incident deuteron beam at 4.4 GeV/c, for purposes of studying deuteron-deuteron interactions. Results from this experiment will increase the world data on dd interactions by more than a factor of 10.

The scanning and measuring of all the film has essentially been completed. The events were measured on the spiral reader and the measurement data were then processed on the CDC 6600 by use of the new set of Alvarez group programs (TVGP, SQUAW, ARROW). We are in the midst of an intensive analysis of the results of these measurements. The analysis is complicated by the presence of biases which are inherent in a study of dd interactions in a bubble chamber. We have made substantial progress in analyzing these unique biases and isolating their effects, and we will soon be reporting results on various dd interactions.

H. P65 EXPERIMENT

An exposure of the 72-inch hydrogen bubble chamber to protons at 5.5 and 6.6 GeV/c was made in 1965.

Nonstrange Interactions in pp Collisions at 6.6 GeV/c

Eugene Gellert and Gerald A. Smith*

At a momentum of 6.6 GeV/c, we have measured 32 000 two-prong and 61 000 four-prong events. Although this is only a fraction of the events on our film, no more measurements are planned at this time.

The fitting of the four-prong events has been completed. We have fitted about 9000 examples of $pp \rightarrow pp\pi^+\pi^-$ with less than a 5 percent contamination, and 8100 of $pp + pp\pi^+\pi^-\pi^0$ and 10 000 of $pp \rightarrow pn\pi^+\pi^+\pi^-$ with a contamination of about 10 percent each, after ionization. The other reactions have been difficult to fit uniquely. A second scan and resolution of conflicts has also been completed, so that more accurate cross sections should be available soon. We have a scanning efficiency of about 97 percent on the first scan and 98 percent on the second scan.

We have continued our study of the events $pp \rightarrow p\pi^-\Delta^{++} \rightarrow p\pi^+$ (four prongs). In collaboration with Eugene Colton and Peter Schlein of UCLA we have submitted for publication an analysis of this reaction in terms of a modified one-pion exchange model, using the off-mass-shell correction factors of Dürr and Pilkuhn. Also, in collaboration with Schlein and Colton,

---

*Michigan State University, East Lansing.

we have studied the reactions $pp \rightarrow \Delta^{++}p\pi^-$, $pp \rightarrow \Delta^{++}p\pi^-\pi^0$, and $pp \rightarrow \Delta^{++}n\pi^+\pi^-$ in order to make an experimental comparison between on- and off-mass-shell inelasticities in π^-p scattering.[1]

An analysis of the events $pp \rightarrow pp\omega$, which constitute 7.0 ± 6 percent of the sample $pp \rightarrow pp\pi^+\pi^-\pi^0$, is under way in order to determine the appropriate exchange mechanism for these events. An analysis of the two-prong events, as well as a corollary analysis of pd interactions at the same momentum, is currently under way.

Strange-Particle Interactions in pp Collisions at 5.5 and 6.6 GeV/c

A. Barry Wicklund and Gerald A. Smith*

In collaboration with University of California, Los Angeles, we have analyzed approximately 15 000 strange-particle-production events in pp collisions at 5.5 and 6.6 GeV/c. A comprehensive article for Physical Review is currently in preparation. Although the one-pion exchange model gives a good description of the data, asymmetries in the Treiman-Yang distributions and other anomalies are being investigated in terms of one-kaon exchange, absorption, and final-state interactions.

I. LRL-SLAC EXPERIMENT ON π^-p INELASTIC REACTIONS

Bernard Deler, LeRoy R. Price, Arthur H. Rosenfeld, Paul Söding,† David Herndon, Ronald Longacre, David Leith,‡ Anthony Brody,‡ and Ben Shen‡

A systematic study of πN inelastic interactions from threshold up to 2 GeV/c is being carried out. The status as of September 1968 is described in a paper presented at the Vienna Conference.[2]

At the end of the last semiannual period we had measured about 175 000 events. We have now added approximately 70 000 events in the region $2000 \leq E_{c.m.} \leq 2200$ MeV. These events are from 72-inch bubble chamber film exposed in 1963 and 1964 (Expt. π63).

J. K82 EXPERIMENT

Stanley M. Flatté, Jerome H. Friedman, Angela Barbaro-Galtieri, Margaret Alston-Garnjost, Gerald R. Lynch, Monroe S. Rabin, Frank T. Solmitz, Philip Davis, Maxine Matison, Norman Uyeda, and Victor Waluch

A total of 600 000 pictures with 12-GeV/c K^+ incident on hydrogen in the 82-inch bubble chamber have been taken between March and October 1968. Scanning has been completed on more than half the film, and over 140 000 events have been measured on the spiral reader. Analysis of the four-prong and vee-two-prong events is under way.

---

1. E. Colton, P. Schlein, E. Gallert, and G. A. Smith, Phys. Rev. Letters 21, 1548 (1968).
*Michigan State University, East Lansing.
†DESY, Hamburg, Germany.
‡Stanford Linear Accelerator Center, Stanford, California.
2. A. D. Brody, A. Kernan, D. W. G. S. Leith, B. S. Levi, A. Minten, B. C. Shen, J. P. Berge, D. Herndon, R. Longacre, L. Price, A. H. Rosenfeld, and P. Söding, Inelastic Pion-Nucleon Scattering from 720 to 1180 MeV/c, presented at the XIVth International Conference on High-Energy Physics, Vienna, 1968.

K. π82 EXPERIMENT

Stanley M. Flatté, Jerome H. Friedman, Angela Barbaro-Galtieri, Margaret Alston-Garnjost, Gerald R. Lynch, Monroe S. Rabin, Frank T. Solmitz, Philip Davis, Maxine Matison, Norman Uyeda, and Victor Waluch

An experiment of 500 000 pictures with 7-GeV/c π^+ in the 82-inch bubble chamber has been approved. The film should be obtained between January and April 1969. Studies on this film will include analysis of the A_2 splitting including $\rho\pi$, $K\bar{K}$, and $\eta\pi$ decay modes; the $f_0 \to K\bar{K}$ branching ratio; and the $\pi\pi \to \pi\omega$ amplitude.

L. BACKSCATTERED LASER BEAM AT SLAC

William Podolsky, Monroe S. Rabin, Joseph J. Murray,* Paul Klein,* and Charles K. Sinclair†

A polarized monochromatic photon beam directed into the SLAC 82-inch bubble chamber has been set up and tested at SLAC. The beam is generated by backscattering Q-switched ruby laser light from the SLAC primary electron beam. Photon energy resolution of better than 10 percent and polarization (circular or linear in any direction) in excess of 90 percent will be attainable when the beam goes into operation in December 1968. The energy range of the backscattered photons is from 500 MeV to 7 GeV. Within a year the range should be extended to 14 GeV by frequency-doubling the incident ruby laser light.

Study of Vector-Meson Photoproduction

William Podolsky, Monroe S. Rabin, Arthur H. Rosenfeld, and Roland Windmolders
(with experimenters from SLAC, U.C., Berkeley, and Tufts University)

In December 1968 an experiment will be initiated to study the photoproduction of vector mesons from hydrogen. 250 000 pictures will be taken using linearly polarized photons at an energy of 3 GeV. The linear polarization of the photons will allow us to separate the processes of diffractive scattering and one-pion exchange.

In a separate part of this experiment, a few thousand pictures will be taken at each of several different photon energies to yield a determination of the energy dependence of the total γp cross section from 0.5 to 7 GeV.

II. ACCELERATOR EXPERIMENTS USING SPARK CHAMBERS

A. PROGRAM IN COLLABORATION WITH MOYER-HELMHOLZ GROUP

Orin I. Dahl, Morris Pripstein, and Michael Wahlig

A series of spark-chamber experiments at the Bevatron has been undertaken to study various neutral final states in $\pi^- p$ interactions.

Neutral Decay Modes of the η Meson

We have recently completed a Bevatron experiment to measure the branching ratios of the various neutral decay modes of the η meson in a study of the reaction $\pi^- p \to n\eta$, just above

*Stanford Linear Accelerator Center, Stanford, California.
†Tufts University, Medford, Massachusetts.

threshold, where the cross section for this reaction is maximum. The reaction was identified by detecting all the final-state particles. The detection equipment consisted of a set of very large spark chambers to detect γ rays and a set of neutron counters to measure the neutron time of flight from the liquid-hydrogen target. The 20 neutron counters were mounted in a ring at a polar laboratory-system angle of 13.2 deg. The spark chambers are between 7 and 8 radiation lengths thick, and form five of the six faces of a cube, with the target at the center so that the solid angle for detection of γ rays from the decay of the η meson is large.

In the experiment, we took a total of approximately 250 000 pictures, of which 40 000 contain events from the reaction $\pi^- p \rightarrow n\eta$, and the rest include important information about various types of background.

We plan to scan and measure the data on the spark-chamber pictures with the use of the SASS device developed at the Lawrence Radiation Laboratory.

Search for the Decay, $N^*(1688) \rightarrow n\eta$

With exactly the same beam and equipment (but suitably rearranged in position) at the Bevatron we are now preparing to make a quick but sensitive search for the hitherto undetected $n\eta$ decay mode of the two $N^*_{1/2}$ resonances with masses both about 1688 MeV and with spin-parity quantum numbers of $5/2^+$ and $5/2^-$, respectively. To do this, we will measure the differential cross section for the reaction $\pi^- p \rightarrow n\eta$, at seven different π^- beam laboratory momenta between 850 and 1200 MeV/c, and then make a partial-wave analysis of the data.

We are now in the midst of tuning the apparatus at the Bevatron, and we hope to start taking data in December 1968.

Neutral Diboson Experiment

With the same personnel and much of the same equipment as in the preceding spark-chamber experiments, we are also preparing for an experiment at the Bevatron to study the reaction $\pi^- p \rightarrow n\pi^0\pi^0$ between 1.5 and 2.5 GeV/c. A completely different beam from the one used in the previous experiments has been designed. The principal purposes of the experiment is to analyze the $\pi^0\pi^0$ system in a search for scalar mesons and to measure the $\pi^-\pi$ phase shifts.

We now expect to run this experiment at the Bevatron immediately after the $N^*(1688) \rightarrow n\eta$ experiment is finished. We expect to collect about 8000 events of the desired type to study the peripheral production of the diboson $\pi^0\pi^0$ system.

B. DEUTERON MISSING-MASS EXPERIMENT

Maris A. Abolins, Gerald S. Smith,* Lawrence H. Smith,† and A. Barry Wicklund

An experiment to measure the momentum spectrum of deuterons produced at 3.85, 4.6, and 6.25 GeV/c incident momenta was completed in September. The purpose of the experiment is to study the recoil charged-boson mass spectrum in the region from the pion to the A_2 meson. The deuterons are produced at 180 deg in the c.m. system, and the corresponding range of laboratory momenta permitted an accurate identification of deuterons by means of a Cerenkov

*Michigan State University, East Lansing.
†Space Sciences Laboratory, University of California, Berkeley.

counter and time-of-flight and pulse-height measurement. Momentum was measured with six spark chambers employing magnetostrictive readout; the data, together with the monitor counters and a digital voltmeter recording magnet currents, was interfaced to a PDP-5 computer. Articles describing the spark-chamber system and subsequent data reduction have been written.[1] Approximately two million events were taped in five Bevatron periods, and 95 percent of these were momentum-analyzable. Target-empty rates were typically 30 percent of the target-full rates. Although small inconsistencies due to systematic errors are still being studied, we have measured π and ρ meson production cross sections and can place an upper limit (2 μb/sr) on the possible production cross section of the "δ(963)." Our momentum resolution is better than 1 percent, and the statistical significance of our measurements of boson production cross sections is of the order of 2 percent.

III. EXPERIMENTATION USING COSMIC RAYS

A. HIGH-ALTITUDE PARTICLE PHYSICS AND COSMIC-RAY EXPERIMENTAL FACILITY

Luis W. Alvarez, Jared A. Anderson,* Andrew H. Buffington,* Philip M. Dauber, Lester J. Lloyd, Lawrence H. Smith,* and Michael A. Wahlig

This program, led by Luis W. Alvarez, is funded by NASA, through a contract with the Space Sciences Laboratory of the University of California. The above-named Lawrence Radiation Laboratory and Space Sciences Laboratory staff members are contributing to the project, together with a group of physicists at the NASA Manned Spacecraft Center at Houston. Because this program is currently benefiting from the availability of LRL facilities and working space, the following account is presented here.

The present objective of the program is to develop balloon-borne and satellite-borne momentum-analysis systems to measure the spectra of cosmic-ray particles; the high-energy protons (> 100 GeV) will subsequently be used in the study of high-energy interactions. Present work is focused on the development of both the momentum-analysis system and a balloon experiment to measure the energy spectra of the heavily ionizing ($Z \geqslant 3$) particles in the primary cosmic radiation. Some preliminary design work is also being done in attempting to specify the requirements appropriate for a large manned orbiting cosmic-ray laboratory.

Because of the markedly reduced funding of NASA in FY 1969 and FY 1970, we have revised the physics effort from flying our large (12 kG-m over 1 meter bore) superconducting magnet in July 1969 to a series of small superconducting magnet flights in the late spring or summer of 1969. The factors underlying this decision are related to the rising expenditures required to meet the originally scheduled HAPPE-2 flight date and a period of decreasing funding levels. The experience gained in this revised program will be applicable to the original program, and has the additional benefit of providing important and exciting measurements about a fundamental aspect of cosmic rays.

The first small superconducting-magnet flight instrumentation will include a superconducting magnet that has been fabricated and tested, spark chambers for momentum analysis,

1. See Refs. 10 and 11 of the Publications and Papers on the last page of the A Section report.
*Space Sciences Laboratory, University of California, Berkeley.

and emulsion plates to improve the momentum resolution for high-energy particles, two large pieces of cesium iodide crystal to make accurate dE/dx measurements, and a solid Cerenkov counter for additional dE/dx information. Engineering and fabrication of this gondola is in an advanced state, and we expect to subject the gondola to a rigorous testing procedure in the next few months.

These small flights should produce data on the energy spectrum and the charge spectrum of the high-Z nuclei present in the primary cosmic rays for $3 \leq Z \leq 30$, over an energy range from 5 to 50 GeV/nucleon. They will also provide us with a survey of the proton and alpha components of the beam at high energies, as well as some valuable experience in the operational aspects of flying a superconducting magnet on a balloon. Experience gained in this revised program will be applicable to the original program, so that when funding again is restored to a level to permit flying the large superconducting magnet, the probability of success will be greatly enhanced.

Work is continuing on the emulsion-spark-chamber spectograph system utilizing the HAPPE magnet. The high-resolution HAPPE spark chambers are currently being used in connection with an experiment to search for high-energy horizontal muons. An important by-product of this experiment will be an accurate understanding of the optical calibrations necessary for the chambers and any systematic effects inherent in them. The chambers, together with the magnet, will then be used in ground-based development work on the emulsion spectograph, culminating in an experiment to measure the ultrahigh-energy (up to 10^{13} eV) vertical muon spectrum. This measurement has recently become of great importance because of anomalies in the zenith-angle distribution of these particles. Calibration techniques involving both premeasurement and computer analysis of the measured particle trajectories are under development.

Computer programs for calibration of compact high-resolution spark-chamber optical systems and track finding in associated emulsion plates have been written and successfully tested. Track-finding runs to test the new wide-gap chambers and to aid in the development of sophisticated track-finding methods are under way. The massive granite-stage scanning and measuring engine is under construction. This device will be used to measure the emulsion plates and, under computer control, to locate and accurately measure the tracks. An accuracy of better than $1\,\mu$ over 0.5 meter will be attained by means of laser interferometry.

A number of other projects are being pursued. Among them is the development of a large gas Cerenkov counter which will be used for subsequent flights of the SSCM gondola as well as the large magnet. A prototype multi-wire proportional counter has been constructed which may eliminate a number of problems associated with spark chambers. The development of shower counters for electron identification is underway in collaboration with the Manned Spacecraft Center.

Emulsion Spectrograph Program

Luis W. Alvarez, Andrew H. Buffington,* Philip M. Dauber, Jerome H. Friedman, Margaret Alston-Garnjost, Lawrence H. Smith,* Frank T. Solmitz, M. Lynn Stevenson, and Michael A. Wahlig

A program is being undertaken to demonstrate and develop the emulsion-spectrograph technique for accurate measurement of high momenta using spark chambers to locate the tracks. Applications at future high-energy accelerators (including the CERN storage rings), in ground-based cosmic-ray muon experiments, and in balloon- or satellite-borne cosmic-ray experiments are envisaged. Concepts and hardware developed for the HAPPE (High Altitude Particle Physics Experiment) project will be adapted for the demonstration of the technique on a large scale, using muons. The existing, completed hardware includes the HAPPE superconducting magnet and high-resolution spark chambers. A gas Cerenkov threshold counter, an emulsion-plate scanning and measuring stage, and a support structure for the emulsions are being completed. Accurate measurement and alignment techniques are being developed. Extensive computer analysis will be necessary for calibration.

B. LRL-SLAC COSMIC-RAY EXPERIMENT

Stanley M. Flatté, M. Lynn Stevenson, Richard DeCoster, William Toner,† and Theodore Zipf†

The apparatus for an experiment to study the energy and angular distributions of high-energy muons at sea level is being prepared at SLAC and LRL. Zenith angles from 50 to 90 deg will be covered, and energies from 10 to several thousand GeV will be measured. The total geometry factor of the system is about 1000 cm^2-sr. The experiment will be set up at SLAC, with data-gathering expected to begin in late January 1969.

IV. FLUX AMPLIFIER

Philippe Eberhard and Ronald Ross

A first model of the flux amplifier has been constructed and is working. It is being tested and improved for measurements of extremely low magnetic fields. The flux-amplifier properties are being studied for possible use in the search for magnetic monopoles.

V. DATA-REDUCTION OPERATIONS

Edward H. Hoedemaker

A. EFFORT

As a result of effort cutbacks we averaged only 64.04 full-time equivalents (FTE's) of effort during this period. Although this represents a 0.8% gain over the previous period, it is far short of our normal summertime figure. Sick leave, vacation, and holiday charges averaged 9.39 FTE's for a total of 73.43 FTE's averaged per month.

---

*Space Sciences Laboratory, University of California, Berkeley.
†Stanford Linear Accelerator Center.

B. SCANNING

Although many experiments are currently being processed, most of our effort is being devoted to the relatively newer ones: K82 and $\overline{P}$D. Older experiments are now engaged in scanning, which does not lend itself to quantitative reporting. In such cases the types of scans are listed with asterisks (*) in place of the number of frames; this is merely intended to give an indication of the nature of the work, not its volume.

Continued emphasis will be placed on staffing new projects during the next few months. With the advent of the photon experiment in the 82-inch chamber and the current spark-chamber experiment at the Bevatron, experiments such as π63, P65, $\overline{P}$67, and APE will continue to lose personnel.

The following table summarizes the scanning for each experiment:

Scanning Distribution

Experiment Name (No.)	Frames of first production scan	Frames of second production scan	Frames of special scan	Scan effort (h)
APE (04)				
General second scan		32400		
Proton scan			300	
Twice-failing events			3500	
APE totals	0	32400	3800	1187
π63 (08)				
Vee'd events		11400		
Conflict scan			*	
Ambiguities			*	
Twice-failing events			*	
π63 totals	0	11400	*	460
K63 (12)				
Ambiguities			11000	
K63 totals	0	0	11000	1761
KD63 (14)				
Ambiguities			3000	
Cascade events			*	
KD63 totals	0	0	>3000	451
P67 (17)				
Ionization scan			1700	
P65 totals	0	0	1700	85
π66 (18)				
Ambiguities			*	
Twice-failing events			*	
π66 totals	0	0	*	711

Scanning distribution (continued)

Experiment Name (No.)	Frames of first production scan	Frames of second production scan	Frames of special scan	Scan effort (h)
K65 (21)				
All event types except 2-prongs		146200		
All event types		10000		
Conflict scan			20000	
Other special scans			12000	
K65 totals	0	156200	32000	2752
PD65 (24)				
2-, 4-, and 6-prongs with or without vees	12500			
Conflict scan			*	
Check scans			*	
PD65 totals	12500	0	*	1116
π66B (25)				
Ambiguities			*	
Twice-failing events			*	
π66B totals	0	0	*	1078
BP66 (26)				
Two-prongs	10100			
BP66 totals	10100	0	0	124
$\overline{P}$67 (28)				
All event types	6000			
Conflict scan			5300	
Cross-section scan			2600	
$\overline{P}$67 totals	6000	0	7900	439
K82 (30)				
All event types	167000	237900		
Conflict scan			22900	
Check scans			36400	
Other special scans			23800	
K82 totals	167000	237900	83100	11050
$\overline{P}$D (31)				
All event types	43500			
Two-prongs	65900			
Check scans			1100	
$\overline{P}$D totals	109400	0	1100	2688
Eta (34)				
General first scan	4400			
ETA totals	4400	0	0	481
GROUP TOTALS	309400	437900	>143600	24383

C. MEASURING

The spiral readers operated at near-maximum output. Barring significant hardware changes and (or) effort-level increases, we should remain in the neighborhood of 650 000 to 700 000 events semiannually, with a 9:1 ratio between the spiral readers and the measuring projectors II.

The table below shows the breakdown of effort and measurements by machine:

	Events	Measuring hours
MPII's:		
IIA	0	0
IIB	42767	3354
IIC	11823	1781
IID	10731	2164
All MPII's	65321	7299
Spiral readers:		
SRI	311472	3242
SRII	254848	3137
Both SR's	566320	6379
All machines	631641	13678

VI. PROGRAMMING EFFORT

PERSONNEL

Barrie Pardoe

(supervisor of Group A programmers)

G. T. Armstrong
J. H. Burkhard
R. E. Carlson
R. W. Casey
B. J. Cottrell
O. I. Dahl
N. L. Gould
M. S. Hutchinson
D. L. Iverson
W. O. Koellner
M. Leavitt
J. T. Merrill
M. I. Nelsen
S. W. Reynolds
E. A. Romascan
J. J. Wilson

INTRODUCTION

From May through October 1968, the programming group has continued the maintenance and development of existing programs. Particular emphasis has been put into reducing the core requirements and execution time of the bubble chamber programs so as to make less demand on the Laboratory's computing facility.

PROGRAMS

1. Data-Editing Programs

ORDER is a CDC 6600 program for ordering strings of data output from any of the bubble chamber programs. The modification to use the random-access capability of the disk file and to reduce the core requirements is progressing.

2. Data-Analysis Programs

SIOUX is the combined three-view geometric reconstruction and kinematic fitting program for bubble chamber events. The program has been adapted to fit events with up to 18 tracks and 6 vertices. RESQUAW—the version of the program for fitting events using the geometrically reconstructed data contained in SIOUX output—has been similarly adapted and its ease of operation improved.

ARROW is a CDC 6600 program for selecting data from SIOUX output for histogramming, etc. The storage requirements of ARROW have been reduced by at least 30000_8 words to just less than 50000_8 words by rewriting the input/output routines. The program has been adapted to read scanning information from the library tapes produced by LYRIC.

3. Library-Function Programs

LYRIC is the CDC 6600 version of the main library program for Group A. Several jobs now run in 65000_8 words, whereas 140000_8 were required previously. This has been achieved by loading only those routines that are necessary for each job rather than the whole program.

The packing and unpacking routines have been rewritten in machine language and are five to six times as fast as their Fortran counterparts.

4. Spiral-Reader Programs

OAK is the PDP4 control program for the spiral readers. Certain data checks have been included in the program to detect malfunction of the spiral readers. The program has been developed to the stage where the spiral readers are waiting for the PDP4 computer less than 5% of the time.

OCTOPUS is a PDP4 program that is to be a master maintenance diagnostic program for the spiral reader. Maintenance routines for the spiral readers are being developed.

POOH is the CDC 6600 program that filters spiral-reader output to give the tracks intersecting at the vertex. The major modifications made to POOH are: refinement of crutch-point handling by making the histogram bin shapes rectangular in (x, y) space rather than (r, θ) space. This makes for more precise tracking away from the crutch point. Also, if a track has previously been found close to a crutch point, histogramming about that crutch point is not done. This significantly decreases the program running time.

The matching process has been improved by using information as to how well points fit a track in deciding the candidates for matching and in attempting to resolve matching ambiguities.

A display procedure is being developed to permit an operator to resolve the ambiguous matchings of track images put out by POOH.

5. Spark-Chamber Programs

The PDP5 control program for monitoring the spark-chamber data for the Deuteron Missing-Mass Experiment was used over a four-month period to monitor all the data collected for over a million events during the experiment. Experience showed that the power of the PDP5 was barely sufficient to provide all the data required by the experiment.

The DDP24-SASS programs[1] have been used to measure 10 000 $K_2^0 \rightarrow 3\pi^0$ events. The measurement rate was about 360 frames per hour.

Some work has been done in setting up the data analysis system for the test flight for the High Altitude Physics Experiment. The DDP24-SASS programs are being adapted to measure the spark-chamber film taken during the flight and a momentum-analysis program is being developed.

6. Support Programs

The prototype COMUT system has been generalized into a multiprogrammed interactive system. The system will handle up to 15 remote terminals and is intended for solving numerical problems by interpreting groups of simple Fortran statements.

The MAXIME program for maximizing likelihood functions by a combination of grid, maximum-gradient, and Newton methods has been developed into a system called OPTIME. The system now permits both Monte Carlo and real data to be fitted, and both fits to be displayed in histogram form properly normalized and superimposed.

UCRL 8030 is a compendium of particle properties and cross-section data collected from publications. Some preliminary programming has been done to plot cross-section data in a form suitable for publishing directly. A new system is being designed to provide for on-line CRT input in various fonts and on-line data retrieval and display.

The CDC 6600 central memory loader has been completed and is some ten times faster than the loader supplied by CDC. This loader is now in wide use at the Laboratory.

Programming Notes Written During this Period

Note No.	Date	Author(s)	Title
P-171	May '68	J. Friedman A. Rittenberg	KIOWA: General Description
P-172	May '68	O. I. Dahl J. Friedman A. Rittenberg	Alvarez Group Tape Read Routines for use with KIOWA
P-173	June '68	J. Friedman A. Rittenberg	CRT KIOWA for the CDC 6600
P-174	July '68	E. Romascan	SQUAW Output Format for 6600
P-175	July '68	G. Armstrong	MONITOR: A PDP5 Program for the Deuteron Experiment
P-177	July '68	F. Solmitz	OPUS: Ray Trace for the Cal-Comp Plotter
P-178	Aug. '68	J. Merrill	SPIDER: Spiral Reader Calibration Operating Program

1. Donald H. Zurlinden, Computer-Controlled Data Reduction of Spark Chamber Film, UCRL-17695, August 1967.

P-179	Sept. '68	E. R. Gellert	GRAPHPAK: A CDC 6600 Program to Graph a Function or a Series of Points on a Page of Printout
P-180	Oct. '68	M. Leavitt I. Linscott	DDP-24 Operator Instructions for Automatic Scan Programs for the Eta Experiment
P-181	Oct. '68	B. Pardoe	IMPACT: A CDC 6600 Program for Evaluating $\int d\ell \times \tilde{B}(\ell)$ for Straight Paths Through a Magnetic Field Having Cylindrical Symmetry.

VII. PARTICLE DATA GROUP

Arthur H. Rosenfeld, Naomi Barash-Schmidt,* Angela Barbaro-Galtieri, Odette Benary, LeRoy R. Price, Paul Söding,† and Charles G. Wohl

The summer edition of Review of Particle Properties was printed in August both at CERN in time for the September Vienna conference, and in Berkeley; a total of 5000 copies were distributed. This edition marked our tenth anniversary, and some interesting comparisons were made on the first page, which is reproduced on page 46.

Work continues in compiling cross sections, both K^+p and pp. We are trying to divide up the work with the HERA (High Energy Reactions Group) in Europe, so that we have recruited collaborators only from the Western Hemisphere and Japan. We now have collaborators covering all channels, i.e., $\pi^{\pm}p$, $K^{\pm}p$, baryon-proton, and $\bar{p}p$.

PUBLICATIONS AND PAPERS

1. R. A. Grossman, L. R. Price, and F. S. Crawford, Jr., Eta Production in the Reaction $\pi p \rightarrow \pi p \eta$ at 1170 and 1050 MeV/c, UCRL-18141, June 1968; submitted to Phys. Rev.
2. P. M. Dauber, J. P. Berge, J. R. Hubbard, D. W. Merrill, and R. A. Muller, Production and Decay of Cascade Hyperons, UCRL-18388, November 1968; submitted to Phys. Rev.
3. A. Barbaro-Galtieri, M. J. Matison, A. Rittenberg, G. B. Chadwick, Z. G. T. Guiragossian, and E. Pickup, Search for I = 2 Hyperons and Study of Resonances in K^-d Interactions, Phys. Rev. Letters 21, 573 (1968).
4. L. K. Gershwin, M. Alston-Garnjost, R. O. Bangerter, A. Barbaro-Galtieri, F. T. Solmitz, and R. D. Tripp, Measurement of the Asymmetry Parameter for Σ^- Leptonic Decay, Phys. Rev. Letters 20, 1270 (1968).
5. T. Mast, L. K. Gershwin, M. Alston-Garnjost, R. O. Bangerter, A. Barbaro-Galtieri, J. J. Murray, F. T. Solmitz, R. D. Tripp, and B. R. Webber, 40 000 Tau Decays, UCRL-18329, August 1968.
6. T. S. Mast, M. Alston-Garnjost, R. O. Bangerter, A. Barbaro-Galtieri, L. K. Gershwin, F. T. Solmitz, and R. D. Tripp, Electromagnetic Decay of the $Y_0^*(1520)$, UCRL-18328, August 1968.
7. T. S. Mast, L. K. Gershwin, M. Alston-Garnjost, R. O. Bangerter, A. Barbaro-Galtieri, J. J. Murray, F. T. Solmitz, and R. D. Tripp, Measurement of the Σ^+ Magnetic Moment, Phys. Rev. Letters 20, 1312 (1968).

*Brandeis University, Waltham, Massachusetts.
†DESY, Hamburg, Germany.

8. B. R. Webber, F. T. Solmitz, F. S. Crawford, Jr., and M. Alston-Garnjost, Test of the $\Delta S = \Delta Q$ Rule in Leptonic Decays of Neutral K Mesons, Phys. Rev. Letters 21, 498 (1968); Phys. Rev. Letters 21, 715 (1968).
9. G. A. Smith and R. J. Manning, Search for a $2\pi^0$ Resonance Near 730 MeV in π^+d Interactions, Phys. Rev. 171, 1399 (1968).
10. R. M. Graven, F. D. Neu, H. H. Stellrecht, M. A. Torrano, M. A. Abolins, R. L. McCarthy, G. A. Smith, L. H. Smith, and A. B. Wicklund, On-Line Wire Spark Chamber System Used as a Mass Spectrometer, UCRL-18241, May 1968; Nucl. Instr. Methods, to be published.
11. Arthur B. Wicklund, Rapid Spectrometer Analysis, UCRL-18317, July 1968.

TENTH ANNIVERSARY EDITION

As an interesting measure of a decade's progress in particle physics, we reproduce below Side 1 of the original 1958 wallet card. Note that the relevant information really fit on a wallet card, rather than a bed sheet. Table I, entitled "Masses and Mean Lives of Elementary Particles" mentions no resonances, although 3/4 of the way down Table IV there is an entry for the (3/2, 3/2) πp resonance. Even two stable particles were missing, the η (discovered in late 1960) and the Ω^- (found in 1964).

Our Meson table now lists 26 certified isotopic multiplets, mainly unstable of course; and there are loads of other possibilities. The baryon table lists 36 states, the footnotes allude to 16 more.

Parkinson's law as usual applies: After ten years without help, we have just acquired a part-time secretary and are looking for specific funds to continue and expand this work!

DATA FOR ELEMENTARY-PARTICLE PHYSICS

Walter H. Barkas and Arthur H. Rosenfeld

Radiation Laboratory
University of California
Berkeley, California

March 20, 1958

Elementary-particle data and certain other reference information frequently are needed by research workers in high-energy physics in a compact and readily accessible form. For the use of students and staff members in the Radiation Laboratory we have attempted to meet this need. In this summary we have tried to employ units and concepts natural to this field, and to drop those that are irrelevant or obsolete. Slightly older versions of Tables I and Va have already appeared in Gell-Mann's and Rosenfeld's review of elementary particles.[1]

The tables and graphs are as follows:

Table I

Masses and mean lives of elementary particles, November, 1957
(The antiparticles are assumed to have the same spins, masses, and mean lives as the particles listed)

	Particle	Spin	Mass (Errors represent standard deviation (Mev))	Mass difference (Mev)	Mean life (sec)	Decay rate (number per second)
Photon	γ	1	0		stable	0
Leptons	ν	$\frac{1}{2}$	0		stable	0
	e^-	$\frac{1}{2}$	0.51076 (a)		stable	0
	μ^-	$\frac{1}{2}$	105.70 ±0.06 (a)		$(2.22 \pm 0.02) \times 10^{-6}$	0.45×10^{6}
Mesons	π^+	0	139.63 ±0.06 (a)	4.6 (a)	$(2.56 \pm 0.05) \times 10^{-8}$ (a)	0.39×10^{8}
	π^0	0	135.04 ±0.16 (a)		$< 4 \times 10^{-16}$ (d)	$> 2.5 \times 10^{15}$
	K^+	0	494.0 ±0.2 (g)	0.4±1.8	$(1.224 \pm 0.013) \times 10^{-8}$ (h)	0.815×10^{8}
	K^0	0	494.4 ±1.8 (i)		$(0.95 \pm 0.08) \times 10^{-10}$ (e)	1.05×10^{10}
					K_2^0: $(4 < \tau < 13) \times 10^{-8}$ (e)	$(0.07 < \tau < 0.25) \times 10^{8}$
Baryons	p	$\frac{1}{2}$	938.213 ±0.01 (a)		stable	0.0
	n	$\frac{1}{2}$	939.506 ±0.01 (a)		$(1.04 \pm 0.13) \times 10^{3}$ (a)	0.96×10^{-3}
	Λ	$\frac{1}{2}$	1115.2 ±0.34 (j)		$(2.77 \pm 0.15) \times 10^{-10}$ (k)	0.36×10^{10}
	Σ^+	$\frac{1}{2}$	1189.4 ±0.25 (l)	7.1 ±0.4	$(0.83^{+0.08}_{-0.06}) \times 10^{-10}$ (m)	1.21×10^{10}
	Σ^-	$\frac{1}{2}$	1196.5 ±0.5 (o)	$6.0^{+1.4}_{-0.5}$	$(1.67 \pm 0.17) \times 10^{-10}$ (o)	0.60×10^{10}
	Σ^0	$\frac{1}{2}$	1190.5$^{+0.9}_{-1.5}$ (p)		(<0.1) $\times 10^{-10}$ (b)	$>10 \times 10^{10}$
					theoretically $\sim 10^{-19}$	theoretically $\sim 10^{19}$
	Ξ	?	1320.4 ±2.2 (q)		$(4.6 < \tau < 200) \times 10^{-10}$ (r)	$(>0.005 < \Phi < 0.21) \times 10^{10}$
	Ξ^0	?	?		?	?

Table II

Atomic and nuclear constants in units of Mev, cm, and sec[a]

GENERAL ATOMIC CONSTANTS

$N = 6.0249 \times 10^{23}$ molecules/gram
$c = 2.99793 \times 10^{10}$ cm/sec
$e = 4.80286 \times 10^{-10}$ esu $= 1.6021 \times 10^{-19}$ coulomb.
1 Mev $= 1.6021 \times 10^{-6}$ erg $[1 \text{ ev} = e \times 10^{8}/c]$
$\hbar = 6.5817 \times 10^{-22}$ Mev sec $= 1.054 \times 10^{-27}$ erg sec.
$\hbar c = 1.9732 \times 10^{-11}$ Mev cm [$= \lambda\!\!\!^{-}$ for p = 1Mev/c]
$k = 8.6167 \times 10^{-11}$ Mev/$^{\circ}$C [Boltzmann constant]
$\alpha = \frac{e^2}{\hbar c} = 1/137.037$; $e^2 = 1.44 \times 10^{-13}$ Mev cm

Magnetic Moment and Cyclotron Angular Frequency

$\mu_{Bohr} = \frac{e\hbar}{2mc} = 0.57883 \times 10^{-14}$ Mev/gauss
$\omega_{cyclotron} = \frac{e}{2mc} = 8.7945 \times 10^{6}$ rad sec^{-1}/gauss
$\mu_{electron} = 2[1 + \frac{\alpha}{2\pi} + 0.328(\frac{\alpha}{\pi})^2] = 2[1.00116]^b$
$\mu_{muon} = 2[1 + \frac{\alpha}{2\pi} + 0.75(\frac{\alpha}{\pi})^2] = 2[1.001172]^b$

QUANTITIES DERIVED FROM THE PROTON MASS, m_p

Rest mass $= 938.211$ Mev/$c^2 = 1836.12\ m_e = 6.719\ m_\pi$
$1.007593\ m_p(m_H) = 1$ amu $= \frac{1}{16}\ O^{16}$

QUANTITIES DERIVED FROM THE ELECTRON MASS, m_e

Mass and Energy
$m = 0.51076$ Mev $= 1/1836.12\ m_p = 1/273.26\ m_\pi$
Rydberg, $R_\infty = \frac{me^4}{2\hbar^2} = mc^2 \times \frac{\alpha^2}{2} = 13.605$ ev

Length (1 fermi $= 10^{-13}$ cm; $\lambda\!\!\!^{-} = 10^{-8}$ fermi)
$r_e = e^2/mc^2 = 2.8179 \times 10^{-13}$ cm; $\lambda\!\!\!^{-} = 2.8179$ fermi
$\lambda\!\!\!^{-}_{Compton} = \frac{\hbar}{mc} = r_e \alpha^{-1} = 3.8612 \times 10^{-11}$ cm
a_0 Bohr $= \frac{\hbar^2}{me^2} = r_e \alpha^{-2} = 0.52917\ \mathring{A}$

Cross Section
$\sigma_{Thompson} = \frac{8}{3}\pi r_e^2 = 0.6652 \times 10^{-24}$ cm^2 $= 0.6652$ barn

Magnetic Moment and Cyclotron Angular Frequency

$\mu_B = \frac{e\hbar}{2m_p} = 3.1524 \times 10^{-18}$ Mev/gauss
$\omega_{cyclotron} = \frac{e}{2m_p} = 4.7896 \times 10^{3}$ rad sec^{-1}/gauss
$g_p = \frac{\mu}{\mu_B}\Big|_{proton} = 2.7927$; $g_n = \frac{\mu}{\mu_B}\Big|_{neutron} = -1.9128$

Table IV

QUANTITIES DERIVED FROM THE MASS OF THE CHARGED PION, m_π

Rest mass $= 139.63$ Mev/$c^2 = 273.26\ m_e = 0.1482\ m_p$

Length
$\frac{\hbar}{m_\pi c} = 1.4132$ fermi $(\sim\sqrt{2}$ fermi$)$

Natural (e "geometrical") Nuclear Cross Section
$\pi\left(\frac{\hbar}{m_\pi c}\right)^2 = 62.7344$ mb (1 mb $= 10^{-27}$ cm^2)

$(3/2, 3/2)$ πp Resonance
Center-of-mass momentum: $p_\pi = 240$ Mev/c
Lab-system momentum: $P_\pi = 303$ Mev/c ($T_\pi = 194$ Mev)

RADIOACTIVITY
1 curie $= 3.7 \times 10^{10}$ disintegrations/sec
$1/\tau = 87.8$ sec/a, a $= 5.49 \times 10^{7}$ Mev/a, τ in sec
Flux (per cm^2) in (Bevatron) 1 r in carbon:
0.9×10^{7} mesons (of 1 Mev energy charged particles
0.9×10^{8} photons of 1 Mev energy)
(These fluxes are are actually correct to within a factor of two for all materials.)
Natural background: 100 mr/year
"Tolerance": 100 millirem/week [Note, 1 r may produce up to 10^{5} rem^{-1} (r equivalent for man), depending on type of radiation.]

MISCELLANEOUS

Physical Constants
1 year $= 3.1536 \times 10^{7}$ sec ($\pi \times 10^{7}$ sec)
Density of Air $= 1.205$ mg/cm^3 at 20°C
Acceleration by gravity $= 980.67$ cm/sec^2
1 calorie $= 4.184$ joules
1 atmosphere $= 1033.2$ g/cm^2

Numerical Constants
1 radian $= 57.29578$ deg; $e = 2.71828$
$\ln 10 = 2.30259$; $\log_{10} e = 0.43429$.
$\pi = 3.14159$; $\log_{10} \pi = 0.49715$.

Stirling's approximation
$\sqrt{2\pi}\left(\frac{n}{e}\right)^n < n! < \sqrt{2\pi}\left(\frac{n}{e}\right)^n \left(1 + \frac{1}{12n-1}\right)$

Gaussian-like Distributions
For $n > 1$ but not necessarily integral:
$\int_0^\infty x^{2n+1} \exp -\frac{x^2}{2\sigma^2}\, dx = \sigma^{2n}\, n!$; σ^{2n+2} (1); $n \neq -1/2$
Relation between standard deviation σ and mean deviation σ':
$2\sigma^2 = \pi\sigma'^2$; $\sigma = 1.4826$ probable error.
Odds against exceeding one standard deviation = 2.15:1; two, 21.1:1; three, 370:1; four, 15,000:1.

[a] Based mainly on Cohen, Crowe, and Dumond, "The Fundamental Constants of Physics (Interscience, New York, 1957).
[b] C. Sommerfield, Phys. Rev. 107, 328 (1957).

Work performed partly under the auspices of the U. S. Atomic Energy Commission.

EXPERIMENTAL PHYSICS

Kenneth M. Crowe and Donald H. Miller in charge

RADIATIVE CAPTURE OF STOPPED π^- MESONS ON NUCLEI

Kenneth M. Crowe, Anthony S. L. Parsons, and Peter Truoel

An experiment has been proposed to measure the energy spectrum of the high-energy γ rays following the capture of negative pions on various even-even nuclei, i.e. the process $\pi^- + N(A, Z) \rightarrow N(A, Z-1) + \gamma$. Recent theoretical calculations using the partially conserved axial-vector current hypothesis (PCAC) and the impulse approximation for inverse pion photoproduction on bound nucleons have emphasized the similarity of the axial-vector matrix elements governing this process with the kinematically analogous muon capture. In the analysis of total muon-capture rates, it is evident that collective states of the residual nucleus are predominantly excited. The nature and location of these states is predicted, but widely unknown. The best known member of the multiplet is the $\Delta S = 0$, $\Delta T = 1$, $\Delta T_3 = 0$ isospin resonance or giant dipole state seen in photonuclear reactions. In muon capture the isospin states are also excited, but since neutrino spectroscopy is unaccessible, no comparison with theory can be made. Pion capture is expected to proceed via the excitation of spin-isospin states with the selection rules $\Delta S = 1$, $\Delta T = 1$, and $\Delta T_3 = \pm 1, 0$. This will result in a fine structure of the γ-ray spectrum. The complete lack of experimental information, however, does not allow a check on the predictions at present, except for the total branching ratio for the radiative capture (approximately 2%).

Our apparatus has been designed to yield information on the branching ratios to the different excited states. This will allow a model-independent calculation of the axial-vector form factors, which then can be compared (assuming their dependence on the momentum transfer) with those obtained from muon capture and beta decay. A high-resolution, high-acceptance gamma-ray pair spectrometer has been constructed, consisting of two 16- by 36-in. C magnets with common pole tips and an array of six optical spark chambers.

The experiment is scheduled at the 184-inch cyclotron for December 1968, and after calibration of the instrument using a liquid-hydrogen target, we plan to investigate several nuclei.

MEASUREMENT OF THE DIFFERENTIAL CROSS SECTION FOR $\pi^- p \rightarrow n\gamma$ AT 200, 320, AND 370 MeV

Anthony S. L. Parsons, Peter Truoel, Peter Berardo,* Roy P. Haddock,* Jerome A. Helland,* Bernard M. K. Nefkens,* Lynn Verhey,* and Michael E. Zeller*

The data-taking phase of this experiment was completed in October 1968. The neutron counters have a spatial resolution of 0.25 msr each. A lead-plate spark chamber with scintillation counters embedded within it was used to detect the photon. The knowledge of the direction

*University of California at Los Angeles.

of the photon and the neutron as well as their time of flight allowed an event-by-event reconstruction under the assumption of the radiative mode. By this analysis we reject the background from charge exchange ($\pi^- p \rightarrow \pi_0 \eta$).

Data were taken at the above energies at six photon c. m. angles between 40 and 150 deg with the aim of attaining 3% statistical uncertainty at each point. In order to reach a similar level of uncertainty in the systematic errors, the energy-dependent neutron-detection efficiency of the counters is currently being measured in an np elastic-scattering experiment.

The experiment was performed for three reasons: (1) to investigate the SU_3 classification of the Roper resonance, P11 (1460); (2) to determine the isotopic spin amplitudes for pion photoproduction; and (3) to measure the partial width of the radiative decay of the first resonance. To date, the only available data are from experiments using the inverse process ($\gamma n \rightarrow \pi^- p$) with a deuterium target. These data are limited to the effects of presence of the spectator proton which must be calculated.

For the same incident energies a small fraction of the data-taking time was devoted to accumulating events in which the neutron alone was detected. Analysis of the neutron time-of-flight spectra allows the charge-exchange cross section to be deduced. The same c. m. angular range as above was covered. There are currently some inconsistencies in this energy region between the various pion-nucleon elastic channels, and these data hopefully will clarify the situation.

K_2^0 CHARGE ASYMMETRY

Donald H. Miller and Michael A. Paciotti

Results of the experiment to measure the charge asymmetry

$$R \equiv \frac{\Gamma(K_2^0 \rightarrow \pi^- \mu^+ \nu)}{\Gamma(K_2^0 \rightarrow \pi^+ \mu^- \bar{\nu})}$$

in the muonic decay of K_2^0 were published in October 1967.[1] This experiment was performed at SLAC and completed in the summer of 1967. The result was based on about 750 000 counter events; in addition, about 14 000 sample spark-chamber pictures were taken and used to study possible sources of bias.

In an effort to gain additional information from the spark-chamber pictures, about 800 of them have been measured so far. The reconstruction of these events yields several distributions which can be compared with a Monte Carlo calculation for the apparatus. The most important distributions are transverse-momentum plots of the muons and of pions having high enough momentum to get through the analyzing magnet. Also once the detection efficiency of the apparatus is determined by use of the Monte Carlo calculation, one can deduce information about the composition of our neutral kaon beam as a function of momentum. Our beam was taken at three degrees from a 15-GeV/c electron beam incident on 1 ft of beryllium.

1. M. E. Zeller, T. P. Haddock, J. A. Helland, J. Pahl, N. T. Dairiki, R. L. Beck, K. M. Crowe, and M. T. Maung, K^+ Meson Branching Ratio Measurement, UCRL-18494, September 1968; Phys. Rev. Letters 19, 987 (1967).

PION-PION S-WAVE INTERACTION

Kenneth M. Crowe, Ned Dairiki, and Tin Maung*

The analysis of an experiment to study the pion-pion interaction in the S-wave, I = 0 state is in progress. The presence of such a strong interaction between the final-state pions in the reaction, $\pi^- p \rightarrow \pi^0 \pi^0 n$, should exhibit itself in the energy distribution of the neutron. In the threshold region, the energy available to any final pion-nucleon system occurs far below the established isobar resonance states. Thus a pion-pion interaction might be expected to manifest itself as a dominant feature in the final state of the above reaction.

The basic arrangement consists of an array of spark chambers to detect the γ rays from π^0 decays at the point of interaction with neutron counters at the end of a 20-ft flight path for measurement of the neutron time-of-flight spectrum. A time resolution of 1.5 nsec in the time-of-flight spectra would result in an effective mass rsolution of up to 10 MeV in the $\pi\pi$ mass.

The experiment was performed at the 184-inch synchrocyclotron in a collaborative effort with the University of California at San Diego. The program of film scanning and measurement of the showers in the γ chambers to provide event reconstructions is being concluded. Final analysis of the data is presently in progress.

$K^0_{\mu 3}$ CHARGE ASYMMETRY

Donald H. Miller, Robert J. Budnitz, William N. Ross, Robert L. McCarthy, and Jesse H. Brewer

Using a neutral beam from the third focus of the Bevatron's external proton beam, we will measure the charge asymmetry in $K^0_{\mu 3}$ decay. We define the ratio R:

$$R = \frac{\text{Rate } (K^0_L \rightarrow \pi^- \mu + \nu)}{\text{Rate } (K^0_L \rightarrow \pi^+ \mu - \bar{\nu})} .$$

Any difference of R from unity is a direct reduction of CP violation in the K_L decay.

The expectation is that about 10 million $K_L \rightarrow \pi + \mu + \nu$ decays will be observed in the allotted running time. We expect to improve on the present experimental value for the charge asymmetry both by the increased statistical precision and by the ability to study in detail many possible systematic effects.

The experimental design allows the incident K mesons to decay in flight about 30 ft downstream of their production. The decays will occur in a large vacuum vessel; the vacuum is necessary to eliminate neutron interactions in the air otherwise present in the beam line. Pions and mesons from the K_L decay are detected in a series of counter hodoscopes. Muons are separated from pions by differential range through a 44-in. -thick lead wall. The charge of the muon is determined by its curvature as it passes through the magnetic field of magnet M5 (curvature measured by a succession of hodoscopes) and by the position of the meson after it is deflected, the magnet being strong enough to overcome the maximum transverse momentum processed by the muon in the K_L decay.

---

*University of California, San Diego.

The information from all of the hodoscope counters will be transcribed on to magnetic tape (for later reanalysis) using an on-line PDP-9 computer, which will also perform various checks and plot selected histograms for on-line monitoring.

The experimental schedule calls for setup on the Bevatron floor in January 1969 with tune-up and data-taking scheduled immediately thereafter.

MEASUREMENT OF THE DIFFERENTIAL CROSS SECTION FOR $\pi^- p \rightarrow n\gamma$ BETWEEN 500- AND 1200-MeV PION ENERGIES

Kenneth M. Crowe, Anthony Fainberg, Anthony S. L. Parsons, Peter Truoel, Roy P. Haddock,* Bernard M. K. Nefkens,* Lynn J. Verhey,* Alla Weiss,* and Michael E. Zeller*

An experiment to investigate the above process has been scheduled for running at the Bevatron during the first half of 1969. The apparatus will correspond closely to that used at the 184-inch cyclotron (see above) with small modifications to allow for the increased instantaneous beam rate and the higher backgrounds expected.

The aim of the experiment is, firstly, to explore the radiative decay mode of various pion-nucleon resonances in the mass range between 1400 and 1850 MeV. Several predictions, some contradictory, have been made for the neutral radiative decay of many of the resonances in this region. The measurements will take the form of angular distributions as well as excitation functions. Secondly, good data for this process can be used to test the Dar-Weisskopf relationship; this is based on vector dominance, and relates photoproduction of pions and the production of ρ and ω mesons in $\pi^- p$ interactions. Thirdly, using neutron time-of-flight information, we plan to measure charge-exchange and η-production differential cross sections in the regions where disagreements between experiments now exist.

PION FORM FACTOR

Kenneth M. Crowe, Anthony S. L. Parsons, and Anthony Fainberg

Data reduction of the $\pi^{\pm}$ He^4 scattering experiment at the 184-inch synchrocyclotron has been completed. The energies used were 51, 60, 68, and 75 MeV. Various methods of calculating the Coulomb-nuclear distortion terms are used to find the pion form factor. The value found for the rms pion radius is $2.96 \pm .43$F which is larger than and in disagreement with the result predicted by vector-meson dominance. The result and its dependence on the optical-model potential used for the nuclear interaction are discussed in a paper submitted to Physical Review.[1]

STATUS OF THE 184-INCH-CYCLOTRON EXTRACTION STUDIES

Arthur C. Paul

The results of the orbit studies for the existing regenerative beam-extraction system of the 184-inch cyclotron are given in UCRL-18211. This study has encouraged hope of improving the extraction efficiency by addition of spiral-ridge coils into the peeler region, as summarized in the last progress report.[2]

---

*University of California at Los Angeles.

1. K. M. Crowe, A. Fainberg, J. Miller, and A. S. L. Parsons, Measurement of the $\pi^{\pm}$-He Scattering and Its Relation to the Pion Form Factor, UCRL-18473, September 1968.
2. Arthur C. Paul, "184-Inch-Cyclotron Regenerator Studies," in Physics Semiannual Report, UCRL-18235, May 1968, p. 41.

The study of the effect of the introduction of such coils into the 184-inch cyclotron has been proceeding by the use of existing orbit codes. In addition, a new orbit code has been written and is in the final stages of debugging. This new code will allow improved optimization of the spiral-ridge peeler and will assist in studying the elimination of the existing vertical resonance.

PUBLICATIONS AND PAPERS

1. M. E. Zeller, R. P. Haddock, J. A. Helland, J. Pahl, N. T. Dairiki, R. L. Beck, K. M. Crowe, and M. T. Maung, K^+ Meson Branching Ratio Measurement, UCRL-18494, September 1968; submitted to Phys. Rev.
2. K. M. Crowe, A. Fainberg, J. Miller, and A. S. L. Parsons, Measurement of $\pi^{\pm}$-He Scattering and Its Relation to the Pion Form Factor, UCRL-18473, September 1968; submitted to Phys. Rev.

NUCLEAR EMULSION GROUP

Harry H. Heckman in charge

LOW-ALTITUDE GEOMAGNETICALLY TRAPPED PROTONS*

Harry H. Heckman

A report, "Low Altitude Trapped Protons During Solar Minimum Period, 1962 - 1966" has been completed and submitted for publication.[1] The experimental results obtained between November 1962 and June 1966 can be summarized as follows: (1) The omnidirectional proton flux at 63 MeV remained constant to within ±7.6 percent, an error comparable to the statistical accuracy of the flux measurements. (2) No detectable change in the energy spectrum above 57 MeV occurred. These results can be ascribed, qualitatively, to the concurrent minimum of solar activity and stability of the 10.7-cm uv flux, $\overline{F}$, during this period. (3) The omnidirectional-flux-versus-altitude profile can be fitted by a power-law function, with exponent $n = 4.67 \pm 0.08$. This value of n is in agreement with that deduced from measurement of the east-west asymmetries in the proton flux. The measured proton-flux scale heights are significantly larger than can be accounted for by the Harris and Priester model atmosphere. The data therefore suggest that either errors exist in the model atmosphere, particularly in regards to the density gradient, or that adiabatic particle motion is violated.

The investigation of the temporal changes in the flux of the inner-belt protons (see the previous Physics Semiannual Report, UCRL-18235) is continuing. During this report period we have received two recoveries of emulsions after 7 and 8 days in polar orbit. Scanning is in progress. We expect these data will significantly augment our information on how solar-cycle variations of the atmosphere effect low-altitude trapped protons.

PARTICLE IDENTIFIER†

Douglas Greiner,‡ Richard Albert,‡ and Harry H. Heckman

The prototype, eight-element, solid-state counter telescope has been exposed to beams of both known and unknown composition at the 184-inch and 88-inch cyclotrons. Data were recorded on magnetic tape by an on-line PDP-5 computer. While using momentum-analyzed beams at the 184-inch cyclotron, data were collected on response of the counter to p, d, t, He^3, and He^4 by imposing limits on the pulse height in the first two counters.

These data are now being used to calibrate the counters. The calibration consists of using data from all particles and energies to determine the active thicknesses of the counters by means of a maximum-likelihood method. This calibration is nearing completion. Preliminary results indicate the counter will perform energy and mass measurements that are equal to or better than expected. In particular, we find that protons at 80 MeV (range = 6.7 g/cm^2 in silicon), upon traversing the 3.5-g/cm^2-thick telescope, can be properly identified at least

*This research project is being carried out in cooperation with G. H. Nakano, Lockheed Missiles and Space Company, Palo Alto.

1. H. H. Heckman and G. H. Nakano, UCRL-18422, September 1968; submitted to J. Geophys. Res.

†Supported in part by NASA.

‡Space Sciences Laboratory, University of California, Berkeley.

99 percent of the time. Thus, the effective length of the telescope is nearly double the actual length, and the usable energy interval is about 30 percent greater than expected.

STOPPING-POWER DIFFERENCES OF $\pi^{\pm}$ MESONS IN EMULSION

Harry H. Heckman

The scanning and analysis for this experiment has been completed, and a report is in preparation. This experiment compares the relative grain densities of π^+ and π^- mesons in the range interval 1 to 200μ, from which the fractional difference

$$F = [dE/dx(+) - dE/dx(-)]/dE/dx(+)$$

for emulsion is obtained. In the first range interval, 1 to 5μ, and where the mean kinetic energy (in units of rest mass) $\langle \gamma - 1 \rangle$ is 1.3×10^{-3}, we find that F = (14.1±3.1)%. The quality F decreases to zero for kinetic energies $\gamma - 1 \lesssim 1.6 \times 10^{-2}$. The differences in the stopping power of the $\pi^{\pm}$ mesons yield an asymptotic range difference $R_{\pi^-} - R_{\pi^+} \approx 6 \pm 2\mu$. Our results satisfactorily account for the observed range differences of the $\Sigma^{\pm}$ hyperons, the first unambiguous evidence for the dependence of dE/dx on the sign of the charge.[1] Barkas et al. reported a range difference $R_{\Sigma^-} - R_{\Sigma^+} = 25 \pm 16\mu$ (corresponding to 2.9±1.9μ for pions) at $\gamma - 1 = 1.0 \times 10^{-2}$.

The results of the present experiment predict a $\Sigma^{\pm}$ range difference of 40 ± 15μ at $\gamma - 1 = 1 \times 10^{-2}$, with an asymptotic range difference of about 50μ.

HIGH-ENERGY NEUTRON SPECTRUM MEASUREMENTS

Harry H. Heckman and H. Wade Patterson

Work on this project is continuing. The frequency, f, of knock-on star prongs with ranges ≥2 mm produced by 165-MeV neutrons has been measured. We now have an excitation function for f, $27.5 < E_n < 230$ MeV, that is sufficiently accurate to determine the power-law exponent of the incident neutron spectra in this energy region.

FUNDAMENTAL STUDIES OF TRACK FORMATION IN SOLIDS

Harry H. Heckman and Robert M. Walker*

Chemical etching reveals the tracks of heavy charged particles in many solids. This technique has been applied increasingly in recent years to a variety of problems in nuclear physics and geophysics. In the present investigation we are bombarding solids with particles of different masses and energies to study the nature of track formation in solids. In the chemical-etching method it has been established that only particles whose rate of primary ionization exceeds a critical threshold will give tracks. At the moment there is no way of knowing whether this threshold phenomenon represents the onset of a specific radiation-damage mechanism, as for example a thermal-spike phenomenon, or whether it simply reflects the difficulty of etching noncontinuously damaged tracks. To answer this question, we are measuring the total amount of radiation damage in irradiated materials with two techniques that do not depend on track observation. Specifically, we are making x-ray measurements and microhardness measurements as a fraction of bombarding energy.

---

1. Walter H. Barkas, John N. Dyer, and Harry H. Heckman, Phys. Rev. Letters 11, 26 (1963).

*Washington University, St. Louis, Missouri.

The preliminary results obtained in one series of irradiation indicate a very rapid change in the rate of total damage in the energy range where tracks appear after etching. Thus the indication is that there is a unique damage mechanism that comes into play in the track-formation process. These preliminary results need to be verified, and certain auxiliary beam heating experiments need to be performed before this conclusion can be accepted.

It should be noted that these experiments also have an important bearing on the study of surface samples from atmosphereless bodies, such as the moon, that have been exposed to cosmic rays. Our experiments will help us to predict the state of such surfaces and will also help us to make meaningful measurements on such samples when they become available. They may also allow us to develop remote methods for measuring the radiation-exposure ages of planetary surfaces.

PUBLICATIONS AND PAPERS

Harry H. Heckman and George H. Nakano, Low Altitude Protons During Solar Minimum Period, 1962 - 1966, UCRL-18422, September 1968; submitted to J. Geophys. Res.

EXPERIMENTAL PHYSICS

Edward J. Lofgren in charge

DIBOSON PRODUCTION BY 2- TO 5-GeV/c PIONS

Alan R. Clark, Bruce Cork,* Tom Elioff, Leroy T. Kerth,
T. N. Rangaswamy, and W. A. Wenzel

Scanning and measurement (on SASS – Spark Chamber Automatic Scanning System) as well as geometric reconstruction and kinematic fitting have been completed for most of the pictures taken for this experiment. Preliminary dipion invariant mass distributions exhibit strong ρ^0 and f^0 production. Efficiency corrections are being computed. Final data on the mass, Treiman-Yang angle, and $\pi\pi$ scattering angle distributions should be available in several months. We ought to be able to set limits on the production of other particles which decay into two pions at the level of about 10 μb. An abstract has been submitted for the 1969 New York APS Meeting.†

Data have also been taken for dikaons. This has a substantial pionic background, and kinematic fitting is being used to suppress it. The work is still in the preliminary stages.

MEASUREMENT OF THE $(K^+ \to e^+\nu)/(K^+ \to \mu^+\nu)$ BRANCHING RATIO

Alan R. Clark, Bruce Cork,* Tom Elioff, David Newton,‡
Leroy T. Kerth, John F. McReynolds, and W. A. Wenzel

The Bevatron experimental run was completed in June 1968. About one-quarter million photographs were taken, ninety percent of these with the analyzing magnet set for $K^+ \to e^+\nu$. Current calculations of the Ke_2 rate suggest about 500 events should be in this sample. This will allow a good (5%) determination of the branching fraction and thereby test such inputs to the theory as μe universality. We are sensitive to several other K^+ decay modes ($K^+e\nu\gamma$, $K^+\mu\nu\gamma$, $K^+\pi\gamma\gamma$, and $K^+\pi\nu\nu$), and limits on the size of these modes is of some interest.

The photographs are being scanned by SASS, and computer programs to reconstruct the events in space are being written and debugged.

NEUTRAL LEPTONIC CURRENTS

Alan R. Clark, Tom Elioff, R. Clive Field, Henry J. Frisch,
Rolland P. Johnson, Denis Keefe, Leroy T. Kerth, Martin H. Krieger,
David Newton,‡ and W. A. Wenzel

An experiment to search for neutral leptonic currents in K_2^0 meson decay is well into the construction phase. These modes ($\mu^+\mu^-$, e^+e^-, $\mu^\pm e^\mp$) have not been observed previously. Efficiency calculations suggest this experiment should be two to three orders of magnitude more sensitive than earlier work. This corresponds to an ability to measure a branching ratio ($K_L^0 \to \mu^+\mu^-/K_L^0 \to$ all) of 10^{-8} with 5 events for a 50-period run. Note that this is within the range of values predicted for an electromagnetically induced lepton pair.

All of the elements of the detection system are being constructed now and should be ready for testing in December 1968 and January 1969 in a Bevatron parasitic beam; the actual setup

---

*Argonne National Laboratory, Argonne, Illinois.
†T. N. Rangaswamy, A. R. Clark, B. Cork, T. Elioff, L. T. Kerth, and W. A. Wenzel, Dipion Production at 3 to 5 BeV/c, UCRL-18603 Abstract, November 7, 1968.
‡University of Lancaster, England.

at the Bevatron is scheduled for February. The elements include range devices, Cerenkov counters, scintillator hodoscopes, and thin-wire spark chambers. We expect to have an invariant-mass resolution of better than 1% for this equipment.

A rapid-cycling, spark-gap charging system has been developed which will allow the magnetostrictive spark chambers to be run at kilohertz rates.

Effort is being made to have completed programs for both the on-line PDP-9 computer and the CDC-6600 in order to insure maximum diagnostic information during the run.

NUCLEON-NUCLEON TRIPLE SCATTERING

Charles M. Ankenbrandt,* David Cheng,* Leroy T. Kerth, K. C. Leung, Burns Macdonald,† and Pamela T. Surko

The experiment, as described in the previous semiannual report, is now running at the 184-inch cyclotron. Data are being taken for protons now; the study of scattering off neutrons (in deuterium) will begin soon.

The PDP-5 computer monitoring and data-recording system works well. A link to the CDC-6600 computer, to facilitate on-line analysis, is being initiated.

TOTAL CROSS SECTIONS AT COSMIC RAY ENERGIES**

Bruce Cork‡

An experiment at Echo Lake, Colorado, has been detecting greater than 80-GeV hadrons by means of a 60-ton iron calorimeter. The interactions are detected by means of 8-in. -gap, thin-plate spark chambers followed by 1/2-in. -gap, 1-in. iron plate spark chambers. Approximately 20 000 photographs have been taken of greater than 80-GeV hadrons incident on a 10-cm-thick carbon target. These photographs are being measured for inelastic and small-angle scattering.

The carbon has now been replaced with a 2.2-cubic-meter, 1-meter-thick liquid-hydrogen target. Events with an energy greater than 80 GeV are being accumulated at a rate of 300 per day. Measurements of the total and small-angle scattering cross sections have started.

PUBLICATIONS AND PAPERS

1. T. N. Rangaswamy, A. R. Clark, Bruce Cork, T. Elioff, L. T. Kerth, and W. A. Wenzel, Dipion Production at 3 to 5 BeV/c, UCRL-18603 Abstract, November 7, 1968.

*Brookhaven National Laboratory, New York.
†Visitor from Virginia Polytechnic, Blacksburg, Virginia.
**Supported in part by the National Science Foundation.
‡In collaboration with the Universities of Michigan and Wisconsin.

EXPERIMENTAL PHYSICS

Burton J. Moyer and A. Carl Helmholz in charge

η^0 DECAY AND $\pi^0\pi^0$n EXPERIMENTS

Roger Chaffee, Orin Dahl,* Robert W. Kenney, Jerry Nelson, Morris Pripstein,* Thomas B. Risser, Andris Skuja, and Michael A. Wahlig*

Both these experiments are collaborations with several members of Group A. They are designed to study neutral final states consisting of γ rays and neutrons from the reactions $\pi^- \rightarrow \eta^0 n$ (710 MeV/c) and $\pi^- p \rightarrow \pi^0\pi^0 n$ (1.5 to 2.5 GeV/c) respectively.

The first of three separate experiments has been completed through the running stage. It is a study of neutral final states in η decay and hopefully will rectify the present disagreements among existing branching-ratio measurements. Film analysis is currently under way.

The beam is now being tuned for the second experiment. We will look for the reactions $\pi^- p \rightarrow N^*(1680) \rightarrow \eta n$ and $\pi^- p \rightarrow N^*(1688) \rightarrow \eta n$. There exists an SU(3) prediction of 0.3 mb for an ηn final state via either $D_{15}N^*(1680)$ or $F_{15}N^*(1688)$ intermediate states. Neither reaction has been observed. Running should be completed by March 1, 1969.

The third experiment in this series is not yet scheduled. It is a relatively complete study of the $\pi^0\pi^0$ system in the reaction $\pi^- p \rightarrow \pi^0\pi^0 n$.

In each experiment γ rays will be detected by a five-sided cube of lead-plate spark chambers used by the Moyer-Helmholz group for their $K_2^0 \rightarrow \pi^0\pi^0$ experiment at the Bevatron. The neutrons will be detected by 20 large scintillation counters, the entire system to be triggered by neutrons with the desired time of flight.

The existing spark-chamber array will be used without rearrangements. The η^0 experiments also use the existing beam elements and therefore will be the first to be completed. Expected performance in the first η^0 run has been achieved in all respects. The $\pi^0\pi^0$ experiment to follow after the η^0 experiments, will require a new pion beam to be constructed, and the neutron counters to be reoriented.

PARTIAL CAPTURE RATES OF MUONS BY ^{16}O LEADING TO EXCITED NUCLEAR STATES OF ^{15}N

Selig N. Kaplan, Robert V. Pyle, L. Edward Temple, and George F. Valby

Partial interaction rates have been measured for the muon-capture reaction $\mu^- + {}^{16}O \rightarrow {}^{15*}N + n + \nu$ leading to the excited states at 6.323 MeV ($3/2^-$), 5.270 MeV ($5/2^+$) and 5.299 MeV ($1/2^+$). The observed partial capture rates were $2.50 \pm 0.23 \times 10^4$ sec^{-1}, $0.89 \pm 0.14 \times 10^4$ sec^{-1}, and $0.70 \pm 0.30 \times 10^4$ sec^{-1}, respectively. With somewhat more precision but with poorer energy resolution a combined transition rate to the latter two levels of $1.28 \pm 0.23 \times 10^4$ sec^{-1} was found. The total observed transition rate to excited states of ^{15}N is in good agreement with predictions attending recent calculations of the total capture rate. The

*Group A

distribution of the excitation among the three excited states for which measurements were made is very similar to that observed from the photoexcitation reactions

$$\gamma + {}^{16}O \begin{array}{l} \nearrow {}^{15*}N + p \\ \searrow {}^{15*}O + n \end{array}.$$

These results have been reported in UCRL-18427.[1]

The Doppler-broadened line width in the transition-γ-ray spectrum is being analyzed to obtain additional information about the primary excitation process.

K_{e4} EXPERIMENT

Brownlee Gauld, Victor Perez-Mendez, Robert J. Cence,* Brian D. Jones,* Richard Morgado,* Vincent Z. Peterson,* and Leroy Shiraishi*

After many delays this experiment is now scheduled to begin setting up about December 1, 1968. Construction of spark chambers, Cerenkov counters, and scintillator counters has been completed. These are now being tested in a parasite beam at the Bevatron.

COMPARISON OF THE LIFETIMES OF POSITIVE AND NEGATIVE PIONS

David S. Ayres, David O. Caldwell,† Allan M. Cormack,‡ Virgil B. Elings,† Arthur J. Greenberg, William P. Hesse,† Robert W. Kenney, and Rollin J. Morrison†

The past six months have been largely devoted to completing details of the data analysis and to reporting our results and experimental methods in a series of papers. The lifetime-ratio measurement was published in July,[2] and the details of the experiment and analysis were reported in the Ph. D. thesis of one of the participants.[3] Analysis of the π^- absolute-lifetime data is not yet completed, pending investigation of a number of systematic uncertainties. Work on articles dealing with the liquid-deuterium Cerenkov counters and our measurement of the refractive index of liquid deuterium has been nearly completed, and the manuscripts will be submitted for publication in the near future. Our results were also reported at the XIVth International Conference on High Energy Physics in Vienna, and our Cerenkov counters were described at the 1968 International Conference on Instrumentation for High Energy Physics in Paris.

Work is continuing on beam design for Bevatron experiment 105, which will extend our experimental testing of CPT invariance by comparing the lifetimes of K^+ and K^- mesons.

---

1. S. N. Kaplan, R. V. Pyle, L. E. Temple, and G. F. Valby, Partial Capture Rates of Muons by ^{16}O Leading to Excited Nuclear States of ^{15}N, UCRL-18427, September 1968; submitted to Phys. Rev. Letters.

*University of Hawaii.

†University of California, Santa Barbara.

‡Tufts University, Medford, Mass.

2. D. S. Ayres, A. M. Cormack, A. J. Greenberg, R. W. Kenney, D. O. Caldwell, V. B. Elings, W. P. Hesse, and R. J. Morrison, Phys. Rev. Letters 21, 261 (1968).

3. David S. Ayres, Comparison of π^+ and π^- Lifetimes as a Test of CPT Invariance (Ph. D. Thesis), UCRL-18369, October 1968.

$K_L^0 \to 2\pi^0$

A. Carl Helmholz, Robert W. Kenney, Ivan R. Linscott, Burton J. Moyer, William P. Oliver, Sherwood I. Parker, Charles A. Rey, Robert J. Cence,* Brian D. Jones,* Vincent Z. Peterson,* Victor J. Stenger,* and J. Wilson*

Data collection at the Bevatron for the $K_2^0 \to 2\pi^0$ experiment was completed in early January 1968. A total of 1.8 million spark-chamber pictures was taken in the following modes: (1) free decay into a neutral final state of two or more gammas (45% of all pictures); (2) free decay into a final state having at least two charged particles (18%); (3) carbon regenerator at one position, neutral final state (5%); (4) beryllium regenerator at three positions, neutral final state (19%); (5) beryllium regenerator at three positions, charged final state (5%); (6) beryllium regenerator separated into five slabs spaced uniformly through decay volume, neutral final state (8%); (7) target-empty runs; (8) random pulsing runs.

A total of 0.46×10^6 photographs of neutral free-decay triggers was double-scanned. About 19 000 K-like events were found. Analysis of the results shows that almost 94% of $K_L^0 \to 3\pi^0$ decays give 5- or 6-shower events. Monte Carlo calculations predict that 77% of $K_L^0 \to 2\pi^0$ decays will produce 4-shower events. Neutrons and K_L^0's interacting in the chamber have low trigger efficiency and are visually rejected. Most other background events fail to display a common decay vertex. Nearly 750 4-shower events have been measured to have decay vertices within a 40-in. cubical fiducial volume.

Since the K_L^0 momentum is known, we require only shower directions to reconstruct each 4-shower event as a possible $K_L^0 \to 2\pi^0$ decay. Spark counting is useful in choosing between different kinematic hypotheses. Four-momentum conservation in $K \to 4\gamma$ and the opening-angle constraints in $\pi^0 \to 2\gamma$ strongly inhibit accepting $K_L^0 \to 3\pi^0$ decays, which is our only real background. Our present most probable shower-pointing error is 60 mrads, which limits resolution in $\theta_{\pi\pi}$ (angle between π^0's in $K_L^0 \to 2\pi^0$). Reconstructing Monte Carlo events on a $\mu = \cos\theta_{\pi\pi}$ plot, we find that 0.392 of $2\pi^0$ decays (but only 0.013 of $3\pi^0$ decays) have $-1.00 \leq \mu \leq -0.95$ after passing opening-angle and kinematic constraints. An overall enhancement factor of ≈ 400 favors $2\pi^0$ decays over $3\pi^0$ decays among K_L^0 triggers. This factor does not include spark counting.

Our data shows a pronounced peak near $\mu = -1$, which is expected of $K_L^0 \to 2\pi^0$ decays but not of $K_L^0 \to 3\pi^0$.

The $2\pi^0/3\pi^0$ ratio is determined by a maximum-likelihood analysis which utilizes all the information possible in the free-decay data. Using the known $K_2^0 \to 3\pi^0$ branching ratio and Monte Carlo calculations of the relative $2\pi^0$ and $3\pi^0$ trigger efficiencies, we calculate the magnitude of

$$\eta_{00} = \frac{|\text{amplitude for } K_2^0 \to 2\pi^0|}{|\text{amplitude for } K_1^0 \to 2\pi^0|}$$

to be $3.6 \pm .4 \times 10^{-3}$, with the error shown due to statistics only.[1]

---

*University of Hawaii.

1. This value was reported in papers submitted by S. Parker and V. Z. Peterson at the XIVth International Conference on High Energy Physics in Vienna, August 28, 1968. See Ref. 4, Publications and Papers, this report.

A determination of the systematic errors and a final value for $|\eta_{00}|$ using more detailed Monte Carlo values and including minor corrections and calibrations of spark-chamber efficiencies is under way. The use of spark counting to improve background rejection shows great promise.

PHOTOPRODUCTION OF VECTOR MESONS AT SLAC

Leon Kaufman, Victor Perez-Mendez, Albert W. Stetz, Stephen H. Williams, Fatim Bulos,* Robert Diebold,* Rudolph Larsen,* David Leith,* Burton F. Richter,* and Wit Busza*

Data runs on the photoproduction of ρ^0 mesons by monochromatic photons at 5-, 7-, and 9-BeV were completed in February 1968. These data are currently being analyzed; a preliminary report on ρ^0 photoproduction from Be, Cu, Al, Ag, and Pb targets at 9 BeV was presented at the 1968 International Conference on High Energy Physics at Vienna.[1] Descriptions of the annihilation photon beam, magnetostrictive spark chambers, and on-line computer system have also been published.[2]

After the run in February 1968 the beam was rebuilt for operation with bremsstrahlung photons. During June and July 1968, 500 hours of running time were used to study ρ^0 photoproduction from liquid hydrogen and deuterium targets with bremsstrahlung photons from 10-, 13-, and 16-BeV electron beams. An additional 500 hours are scheduled for December 1968 and January 1969 to collect photoproduction data from solid targets at 16-BeV maximum photon energy to provide an independent determination of the γ_ρ^2 coupling constant.

p-He SCATTERING EXPERIMENT

Albert W. Stetz, Victor Perez-Mendez, and Johnie M. Sperinde

We have completed an experiment at the 184-inch cyclotron to study the effectiveness of helium for polarization analysis for 70- and 80-MeV protons.[3] Using the streamer-chamber image-intensifier system described in Ref. 3, we have photographed 630 000 prospective p-He events. The film has been scanned and measured using the TRAMP digitized protractor. The analyzing power of helium was obtained as a function of c.m. angle from a final sample of about 3000 elastic events at each energy.

A phase-shift analysis was carried out on the data from this experiment together with the polarization and differential cross-section data at 63 and 94 MeV. The phase shifts obtained from these data vary smoothly with energy and are consistent with results at lower energies. No new resonances appear in this energy range, but the scattering continues to be dominated by strong S-wave repulsion and attractive forces in the $P_{1/2}$ and $P_{3/2}$ angular-momentum states. The polarization changes rapidly with energy, but is generally small in the forward direction, with positive peaks at larger angles.

The analyzing power of the reaction $p + He^4 \rightarrow d + He^3$ was also obtained with somewhat poorer statistics

*SLAC, Stanford, California
1. See Ref. 5, Publications and Papers, this report.
2. See Refs. 6 and 7, Publications and Papers, this report.
3. See Ref. 8, Publications and Papers, this report.

These results are given in detail elsewhere,[1] and a further paper[2] has been presented at the American Physical Society meeting in San Diego, December 1968.

MEASUREMENT OF np → γd ANGULAR DISTRIBUTION AS A DIRECT TEST OF TIME REVERSAL IN THE ELECTROMAGNETIC INTERACTION

David Cheng, Victor Perez-Mendez, Johnie M. Sperinde
Jerome A. Helland,* Bryce L. Schrock,* Roy P. Haddock,* J. Detoeuf*
Michael J. Longo,† S. Wilson,† and K. K. Young†

The experimental run on the cyclotron was finished by January 1968 and the raw data including the results of the film digitization are now on magnetic tape in a form suitable for final computations. The test of T violation in electromagnetic interactions in this experiment consists of a comparison of the shapes of the differential cross sections for the forward reaction, with the inverse deuteron photodissociation reaction at c.m. energies about the N^*(1238) excitation energy.

In order to compare our data with the recent photodissociation data of Saclay, C. E. A., and Stanford, we have taken ≈ 20% of our available data and split it into three neutron-energy bins which are below, astraddle, and above the N^* excitation energy. The comparison of this preliminary analysis procedure shows good agreement with the photodissociation differential distributions for the lowest energy bin (as expected) and some disagreement at the extreme angles with the two higher-energy data bins.

For our final analysis we plan to group our data into five neutron-energy bins: two below, one straddling, and two above the N^* excitation energy, with 5 c.m. angles at each energy, covering the range from 30 to 150 deg. We expect a 3 to 4% statistical accuracy at each point. A paper on the preliminary results was submitted to the International Conference on High Energy Physics in Vienna, August 1968.[3]

π^- - ^{3}He INTERACTIONS

Johnie Sperinde, Benjamin M. Smith, Victor Perez-Mendez, and Donald Frederickson

This experiment has been planned to study in detail some of the binding effects in three-neutron final states seen in our previous experiment on π^--^{4}He interactions. Additionally, we plan to look for states in ^{3}He and ^{4}He which may be excited by pions. This experiment is now being set up in the meson cave of the 184-inch cyclotron, and we expect to start running initially on ^{4}He followed by the ^{3}He target within a few weeks.

WIRE SPARK CHAMBERS AND ELECTRONIC READOUTS

Ronald L. Grove, Gerald L. Stoker, and Victor Perez-Mendez

We concentrated mainly on developing, testing and assembling readouts for sparko-strictive wire chambers in preparation for the K_{e4} experiment. Some further measurements were also made on torsional-mode magnetostrictive pulse readouts for use with large wire chambers in magnetic-field-free positions. Reports have been published on piezoelectric

---

*University of California, Los Angeles.
†University of Michigan, Ann Arbor, Mich.
1. See Ref. 8, Publications and Papers, this report.
2. See Ref. 9, Publications and Papers, this report.
3. See Ref. 10, Publications and Papers, this report.

detectors and their associated electronics,[1] on sparkostrictive spark chambers,[2] and on techniques for using torsional pulses in large wire chambers.[3]

SPARK CHAMBERS FOR THE MEDICAL PROGRAM

Leon Kaufman, Victor Perez-Mendez, Johnie Sperinde,
Alessandro Rindi,* and Harold Wollenberg*

We have built two 24- by 24-in. spark chambers for use with lead converters either for detecting single γ rays or for operation as a positron camera. In the single-γ-mode detection in which an external lead collimator is used for defining the direction of the γ rays, we have measured the resolution in angle and position that can be achieved for various configurations of collimators.

We have also tried the effect of various gas mixtures on the sensitive time and dead time of the chambers.

Tests on the use of a dc potential on one of the wire grids for producing a multi-wire proportional counter effect for triggering the spark chamber and eliminating the use of an external scintillator counter were successful; the second wire chamber mentioned above was built for this purpose with guard rings.

Since the positron detector involves the recognition of the source distribution within the body from the location of the two γ rays, some computation is necessary, and the regional programs for analysis and display have been made.

Two papers were submitted to medical-electronics meetings[4] and two lab reports were written on the general properties of wire chambers for medical diagnostics[5] and on the properties of self-triggering chambers.[6]

PUBLICATIONS AND PAPERS

1. S. N. Kaplan, R. V. Pyle, L. E. Temple, and G. F. Valby, Partial Capture Rates of Muons by ^{16}O Leading to Excited Nuclear States of ^{15}N, UCRL-18427, September 5, 1968; submitted to Phys. Rev. Letters.
2. D. S. Ayres, A. M. Cormack, A. J. Greenberg, R. W. Kenney, D. O. Caldwell, V. B. Elings, W. P. Hesse, and R. J. Morrison, Phys. Rev. Letters 21, 261 (1968).
3. David S. Ayres, Comparison of π^+ and π^- Lifetimes as a Test of CPT Invariance (Ph. D. Thesis), UCRL-18369, October 1968.
4. D. Cheng, R. D. Eandi, R. W. Kenney, I. Linscott, W. P. Oliver, S. Parker, C. Rey, R. J. Cence, B. D. Jones, V. Z. Peterson, V. J. Stenger, and J. Wilson, Experimental Determination of $|\eta_{00}|$ in $K_L^0 \rightarrow 2\pi^0$ Decay Using 4π Solid-Angle Shower Spark Chambers. Part I. Experimental Method, UCRL-18368 Rev., August 13, 1968; Part II. Film Analysis and Results, University of Hawaii Report HEPG UH-511-32-68, July 15, 1968; papers presented at the XIVth International Conference on High Energy Physics, Vienna, August 28, 1968.

*Health Physics Group
1. See Ref. 11, Publications and Papers, this report.
2. See Ref. 12, Publications and Papers, this report.
3. See Ref. 13, Publications and Papers, this report.
4. See Refs. 14 and 15, Publications and Papers, this report.
5. See Ref. 16, Publications and Papers, this report.
6. See Ref. 17, Publications and Papers, this report.

5. F. Bulos, W. Busza, R. Diebold, R. Giese, R. Larsen, D. Leith, B. Richter, R. Russell, L. Kaufman, V. Perez-Mendez, A. Stetz, S. Williams, M. Beniston, and J. Rettberg, Photoproduction of Rho Mesons at 9 BeV, UCRL-18359, June 20, 1968; paper presented at the XIVth International Conference on High Energy Physics, Vienna, August 1968.
6. F. Bulos, W. Busza, R. Giese, R. Larsen, D. Leith, B. Richter, R. Russell, L. Kaufman, V. Perez-Mendez, A. Stetz, S. Williams, M. Beniston, and J. Rettberg, On-Line Wire Spark Chamber Spectrometer, UCRL-18669 Abstract, August 1968; presented at the 1968 International Symposium on Nuclear Electronics at Versailles, September 10-13, 1968.
7. M. Beniston, R. Russell, S. Williams, V. Perez-Mendez, A. Stetz, F. Bulos, W. Busza, R. Larsen, D. Leith, and L. Kaufman, Wire Spark Chamber On-Line to an IBM 1800, IBM Nuclear Physics Technical Bulletin 1, (August 1968).
8. Albert W. Stetz, Polarization in Proton-Helium Scattering at 70 and 80 MeV (Ph. D. Thesis), UCRL-18088, December 1968.
9. A. W. Stetz, V. Perez-Mendez, and J. Sperinde, Polarization in Proton-Helium Scattering at 70 and 80 MeV, UCRL-18504, October 1968; presented at the American Physical Society Meeting, San Diego, December 18-20, 1968.
10. J. A. Helland, J. F. Detoeuf, R. P. Haddock, B. L. Schrock, M. J. Longo, K. K. Young, D. Cheng, and V. Perez-Mendez, Experimental Test of Time-Reversal Invariance with $n+p \rightleftarrows d+\gamma$ Angular Distributions, UCRL-18289, July 1968; presented at the XIVth International Conference on High Energy Physics, Vienna, August 1968.
11. T. F. Droege, V. Perez-Mendez, and G. Stoker, IEEE Trans Nucl. Sci. NS-15, 594 (1968).
12. R. Grove, L. Kaufman, V. Perez-Mendez, Nucl. Instr. Methods 62, 105 (1968).
13. R. L. Grove, V. Perez-Mendez, R. Van Tuyl, New Techniques for Large Wire Spark Chambers with Magnetostrictive Readout, UCRL-18508 (October 1968).
14. M. R. Powell, D. C. Price, L. Kaufman, D. A. Mack, and V. Perez-Mendez, UCRL-18305, May 1968; presented at the Meeting of the Society for Nuclear Medicine, St. Louis, June 1968.
15. M. R. Powell, D. C. Price, L. Kaufman, D. A. Mack, and V. Perez-Mendez, UCRL-18307, June 1968; presented at the Second Canadian Medical and Biological Engineering Conference, Toronto, September 1968.
16. L. Kaufman, V. Perez-Mendez, and H. Wollenberg, Application of Digitized Readout Spark Chambers to Clinical Uses, UCID-3184, June 1968.
17. A. Rindi, J. M. Sperinde, L. Kaufman, and V. Perez-Mendez, Ionization-Triggered Wire Chambers with Magnetostrictive Readout, UCID-3271, October 1968.

EXPERIMENTAL PHYSICS

Wilson M. Powell and Robert W. Birge in charge

$K^-p \rightarrow \Lambda\pi^0$

James Louie

The analysis of the reaction $K^-p \rightarrow \Lambda\pi^0$ in terms of direct-channel Y_1^* resonances and background exchange amplitudes has been completed.[1] Fits were made to our experimental angular distributions, Λ polarizations, and $\Lambda\pi^0$ cross sections over the c.m. energy range 1700 to 1850 MeV. Previous J^P assignments for $Y_1^*(1660)$, $Y_1^*(1770)$, and $Y_1^*(2030)$ have been confirmed. We have determined branching-ratio products $x_{\bar{K}N}x_{\Lambda\pi}$ for these resonances, and a mass and width for $Y_1^*(1770)$. The data do not show much sensitivity to the presence of $Y_1^*(1910)$. Assumption of simple (real) background exchange terms alone is not sufficient to fit the data; modifications to these terms produce reasonable fits.

K^-d AND K^-n ELASTIC SCATTERING

George E. Kalmus and Nathan Jew

Work is continuing on extracting the K^--neutron elastic-scattering cross sections from the K^-d elastic-scattering data and from the K^-d breakup reaction using film obtained from the 1964 exposures taken in the LRL 25-inch bubble chamber. From this same exposure, we are also looking at the reaction $K^-d \rightarrow \pi^-p\Lambda$, where the proton momentum is greater than 0.25 GeV/c. Our particular interest in this reaction is in the recently reported enhancement in the Λp invariant mass.[2]

K^-p INTERACTIONS AROUND 1 GeV/c AND THE $Y_0^*(1815)$[3]

Jack Sahouria

The reaction $K^-p \rightarrow \Lambda\pi^+\pi^-$ in the center-of-mass energy range 1700 to 1850 MeV is analyzed under the assumption, which is well substantiated by the data, that the reaction proceeds mainly by production of the intermediate state $Y_1^*(1385)$. A good fit to the production and decay angular distributions and the mass plots of the $Y_1^{*\pm}(1385)$ and the lambda polarization is obtained, showing the well-known resonances $Y_1^*(1770)$ and the $Y_0^*(1820)$. This fit also requires a possibly resonating state with isospin, spin, and parity $0(3/2^+)$ and mass at or below 1700 MeV, which is the low end of the energy range in this experiment. The branching fractions of the states $Y_1^*(1770)$ and $Y_0^*(1820)$ into the final state $Y_1^{*\pm}(1385) + \pi^\mp$ are found to be $(9.4 \pm 2.6)\%$ and $(8.3 \pm 1.3)\%$ respectively; and the phase between these two states is (201 ± 14), (136 ± 19) and (167 ± 25) deg at the center-of-mass energies 1803, 1821, and 1846 MeV, respectively. The masses of the Y_1^{*+} and $Y_1^{*-}(1385)$ and the mass difference $(Y_1^{*-} - Y_1^{*+})$ are obtained as (1384.2 ± 1.4), (1387.8 ± 1.2), and (3.6 ± 1.0) MeV respectively. The interference between the isospin states 0 and 1 explains the difference between the production rates of the $Y_1^{*+}(1385)$ and the $Y_1^{*-}(1385)$ in the above reaction.

1. J. Louie, Exchange Amplitude Contributions to the Reaction $K^- + p \rightarrow \Lambda^0 + \pi^0$ near 1 BeV/c (Ph.D. Thesis), UCRL-18411, August 1968.
2. D. Cline et al., Phys. Rev. Letters 25, 1452 (1968).
3. J. Sahouria, K^-p Interactions Around 1 BeV/c and the $Y_0^*(1815)$ (Ph.D. Thesis), UCRL-18624, November 1968.

π^+p INTERACTIONS BETWEEN 2.9 AND 4.1 GeV/c [1]

George Gidal, Robert W. Birge, Giovanni Borreani,
David Brown, and Fred Lott

The Regge pole model is most easily tested in reactions where only a single trajectory can be exchanged in the t channel. The success of the single ρ-trajectory model in describing the π^-p charge-exchange reaction has prompted us to extend the available data on two other reactions expected to be dominated by ρ exchange;

$$(1)\quad \pi^+p \rightarrow \pi^0\Delta^{++}$$
$$(2)\quad \pi^+p \rightarrow \omega^0\Delta^{++}.$$

A total of 96 000 two-prong and 40 000 four-prong events distributed among the five incident π^+ momenta 2.95, 3.20, 3.53, 3.74, and 4.08 GeV/c were measured on the FSD machine. Extensive use was made of the automatic ionization measurements available from the FSD.

The dip in $d\sigma/dt$ near t = -0.5, characteristic of the ρ trajectory passing through zero at this point, has been observed in the data. The Δ^{++} density matrix elements are measured, and ρ_{33} shows a sign of a dip near t = -0.5. The cross section for reaction (1) has a momentum dependence which decreases like $p^{-1.5}$.

Several attempts have been made to extract the ρ-exchange contribution for reaction (2). In particular, the asymptotic relation $\rho_{1-1} = -\rho_{11}$ should be satisfied at the value of t where the ρ-exchange contribution vanishes or, more practically, the combination $\sigma_1^+ \equiv \rho_{11} + \rho_{1-1}$ should exhibit a minimum. The distributions of $d\sigma/dt(t)$ and $\sigma_1^+(t)$ for our data show no dip at t = -0.5, but we note a suggestion of a dip at t = -0.8 in both distributions. Such a dip also seems to occur in previous data between 2.3 and 2.9-GeV/c incident momentum. In no single distribution is the dip statistically significant, but its recurrence suggests further experiments.

STUDY OF THE STRANGE-PARTICLE CHANNELS IN π^+p BETWEEN 1.3 AND 1.85 GeV/c

Giovanni Borreani, George Kalmus, and James Louie

The $\pi^+p \rightarrow \Sigma^+K^+$ channel is being studied in detail. Preliminary results of a partial-wave analysis based on three momenta were presented at the XIVth International Conference in Vienna.[2]

Data from an additional three momenta are currently being measured and analyzed. Two types of analysis are being tried: (1) partial-wave analysis in terms of s-channel resonances and s-channel energy-dependent background amplitudes, and (2) a combination of s-channel resonances and u-channel exchanges, of the type used by Louie.[3]

---

1. Paper submitted to XIVth International Conference on High-Energy Physics, Vienna, 1968.
2. G. Borreani and G. E. Kalmus, A Study of the Reaction $\pi^+p \rightarrow \Sigma^+K^+$ in the Region of the Δ(1920), UCRL-18350, July 1968; submitted to the XIVth International Conference on High-Energy Physics, Vienna, 1968.
3. J. Louie, Exchange Amplitude Contributions to the Reaction $K^-p \rightarrow \Lambda^0 + \pi^0$ Near 1 BeV/c (Ph.D. Thesis), UCRL-18411, August 1968.

TWO-PRONG EVENTS IN π^+p FILM BETWEEN 1.3 AND 1.85 GeV/c*

Robert W. Birge and George E. Kalmus

Cross sections and angular distributions for the reaction $\pi^+p \rightarrow \Delta^{++}(1236) + \pi^0$ at three incident momenta have been obtained.[1] From a study of the angular distributions, the cross section for the partial-wave amplitude F37 in this channel is estimated to be 2.8 ± 0.6 mb at 1.34 GeV/c and $4.5 \pm^{0.5}_{0.8}$ mb at 1.42 GeV/c. These cross sections give a value of 0.20 ± 0.04 for $x_{\pi N} x_{\Delta\pi}$ for the F37 resonance, $\Delta(1950)$.

Data at three other momenta have been taken in the 25-inch hydrogen bubble chamber and are being measured.

ON-LINE SYSTEM

Robert W. Birge and P. Wes Weber

The COBWEB system[2] is running 24 hours per day, 7 days a week, with five measuring machines and six scan tables recently connected (via teletypes). MP1A, belonging to the Trilling-Goldhaber group, will be connected to the system in about a month. When connected, this machine completes the originally proposed system configuration. The acquiring of ionization information from Franckensteins is currently under investigation. Preliminary results demonstrate that the pulse-height information from the detecting-head track signal seems adequate to discriminate most tracks. (See Math and Computing and Special Projects groups for Program and Engineering reports.)

DATA REDUCTION

Robert W. Birge and P. Wes Weber

With an average of 22.5 (full-time equivalent) visual measurement personnel, the following data reduction was accomplished in the past six months.

	Measuring		
COBWEB system	Measuring hours	Number of events	Events per measuring hour
(1 measuring microscope, 2 MP1-type Franckensteins)	2 795	39 332[a]	14.1[a]
FSD system			
(2 SP5B-type image-plane digitizers)	4500	108 423	24.1
	7 295	147 755	

a. This rate is a factor of 2 increase over the previous 6 months and a factor of 3 gain over pre-COBWEB. The events measured represent 50 event types with one-third of them in the 72-inch hydrogen bubble chamber and two-thirds in the 25-inch hydrogen bubble chamber.

*This work was done in collaboration with a group at University of California, Riverside.

1. S. Y. Fung, A. Kernan, G. E. Kalmus, and R. W. Birge, Reaction $\pi^+ + p \rightarrow \Delta^{++}(1236) + \pi^0$ Between 1850- and 2010-MeV Center-of-Mass Energy, submitted to XIVth International Conference on High Energy Physics, Vienna, 1968.

2. H. C. Albrecht, E. P. Binnall, R. W. Birge, M. H. Myers, and P. W. Weber, The Cobweb Data Reduction System, UCRL-18528, October 1968.

Scanning			
Experiment	Bubble chamber	Beam	Number of frames
COBWEB system			
36-41	72-inch hydrogen	2.9 to 4.1-GeV/c π^+	15 534
42-44	72-inch hydrogen	1.35 to 1.68-GeV/c π^+	116 324
45-47	25-inch hydrogen	1.25 to 1.85-GeV/c π^+	645 063
50-54	25-inch hydrogen	1.1 to 1.6-GeV/c K^-	602 919
		Subtotal	1 379 830
FSD system			
36-41	72-inch hydrogen	2.9 to 4.1-GeV/c π^+	4 769
42-44	72-inch hydrogen	1.35 to 1.68-GeV/c π^+	10 793
45-47	25-inch hydrogen	1.25 to 1.85-GeV/c π^+	161 730
50-54	25-inch hydrogen	1.1 to 1.6-GeV/c K^-	166 884
		Subtotal	344 176
		Total	1 724 006

PUBLICATIONS AND PAPERS

1. David G. Brown, π^+p 4-Prong Interactions Between 3 and 4 GeV/c (Ph. D. Thesis), UCRL-18254, May 1968.
2. G. E. Kalmus and G. Borreani, A Study of the Reaction $\pi^+p \rightarrow \Sigma^+K^+$ in the Region of the $\Delta(1920)$, UCRL-18350, July 1968; presented at the XIVth International Conference on High Energy Physics, Vienna, 1968.
3. G. Gidal, G. Borreani, D. Brown, F. Lott, S. Y. Fung, W. Jackson, and R. Pu, Evidence Concerning ρ Exchange in the Reactions $\pi^+p \rightarrow \pi^0\Delta^{++}$ and $\pi^+p \rightarrow \omega^0\Delta^{++}$, UCRL-18351, July 1968; presented at the XIVth International Conference on High Energy Physics, Vienna, 1968.
4. James Louie, Exchange Amplitude Contributions to the Reaction $K^- + p \rightarrow \Lambda^0 + \pi^0$ Near 1 BeV/c (Ph. D. Thesis), UCRL-18411, August 1968.
5. S. Y. Fung, A. Kernan, G. E. Kalmus, and R. W. Birge, Reaction $\pi^+ + p \rightarrow \Delta^{++}(1236) + \pi^0$ Between 1850- and 2010-MeV Center-of-Mass Energy; presented at the XIVth International Conference on High-Energy Physics, Vienna, 1968.
6. R. P. Ely, G. Gidal, V. Hagopian, G. Kalmus, K. Billing, F. W. Bullock, M. J. Esten, M. Govan, C. Henderson, W. J. Knight, F. R. Stannard, O. Treutler, U. Camerini, D. Cline, W. F. Fry, H. Haggerty, R. H. March, and W. J. Singleton, A Study of K_{e4} Decays, presented at the XIVth International Conference on High-Energy Physics, Vienna, 1968.

7. H. C. Albrecht, E. P. Binnall, R. W. Birge, M. H. Myers, and P. W. Weber, The Cobweb Data Reduction System, UCRL-18528, October 1968; presented at the International Conference on Advance Data Processing for Bubble and Spark Chamber, Argonne National Laboratory, October 28-30, 1968.
8. Jack S. Sahouria, K^-p Interactions Around 1 BeV/c and the $Y_0^*(1815)$ (Ph. D. Thesis), UCRL-18624, November 1968.

EXPERIMENTAL PHYSICS

Emilio Segrè and Owen M. Chamberlain in charge

OBSERVATION OF Σ^--HYPERONIC ATOMS

Clyde Wiegand

About 10 percent of the K^--mesons that stop in nuclear matter cause Σ^- hyperons to be emitted. The Σ^- particles stop in the target in which they are generated and emit characteristic x rays as they cascade toward nuclei. We have observed the radiation emitted by Σ^--hyperonic atoms along with the radiation from kaonic atoms. Spectral lines with energies corresponding to the transitions of particles of Σ^--hyperonic mass have been observed in Cl, K, and Ca (see Fig. 1). There is some indication that the lines are present in Pb, but they are not so definite due to the decreased detector efficiency at the higher energies associated with the heavier elements.

The observation of Σ^--hyperonic x rays is important because the spectral lines have a fine structure due to the magnetic moment of the Σ^-. The splitting will be about 1 keV per nuclear magneton for lines emitted by the heavy elements. Improvement in beam intensity and detectors should allow the observation of effects due to the fine structure and lead to determination of a value of the magnetic moment of the Σ^- hyperon.

K^--MESIC ATOMS

Clyde Wiegand and Raymond Kunselman

We have obtained the K^--mesic x-ray spectra of 24 elements ranging from Z = 16 through Z = 92. Each of the elements showed three or more characteristic x-ray lines due to kaons cascading through discrete energy toward nuclei in the material in which they came to rest. Energy-level shifts of some of the lines due to nuclear absorption were also observed.

RARE DECAYS OF CHARGED K MESONS

Roger Hildebrand, Rae Stiening, and Clyde Wiegand

We had planned an experiment for studying the branching $\eta \rightarrow \mu^+ + \mu^-$ in the eta decay and built a small part of the apparatus for it, when we learned at the International High Energy Conference at Vienna of similar work which had been done at CERN by Hyams et al. with results comparable to what we could expect to obtain here. For this reason we dropped the experiment. The travel expenses were thus excellently invested.

There are some interesting problems on rare decay modes of K mesons which we can advantageously explore—for instance, the $K^+ \rightarrow \pi^+ + \nu + \bar{\nu}$ mode. Experimentally this would appear as a K^+ decaying in a pion of momentum above 205 MeV/c, without any gamma rays. We can explore such a branching down to a level of 10^{-5} to 10^{-6}. We have planned and instrumented an experiment for this purpose in collaboration with Dr. Roger Hildebrand of the Enrico Fermi Institute of The University of Chicago.

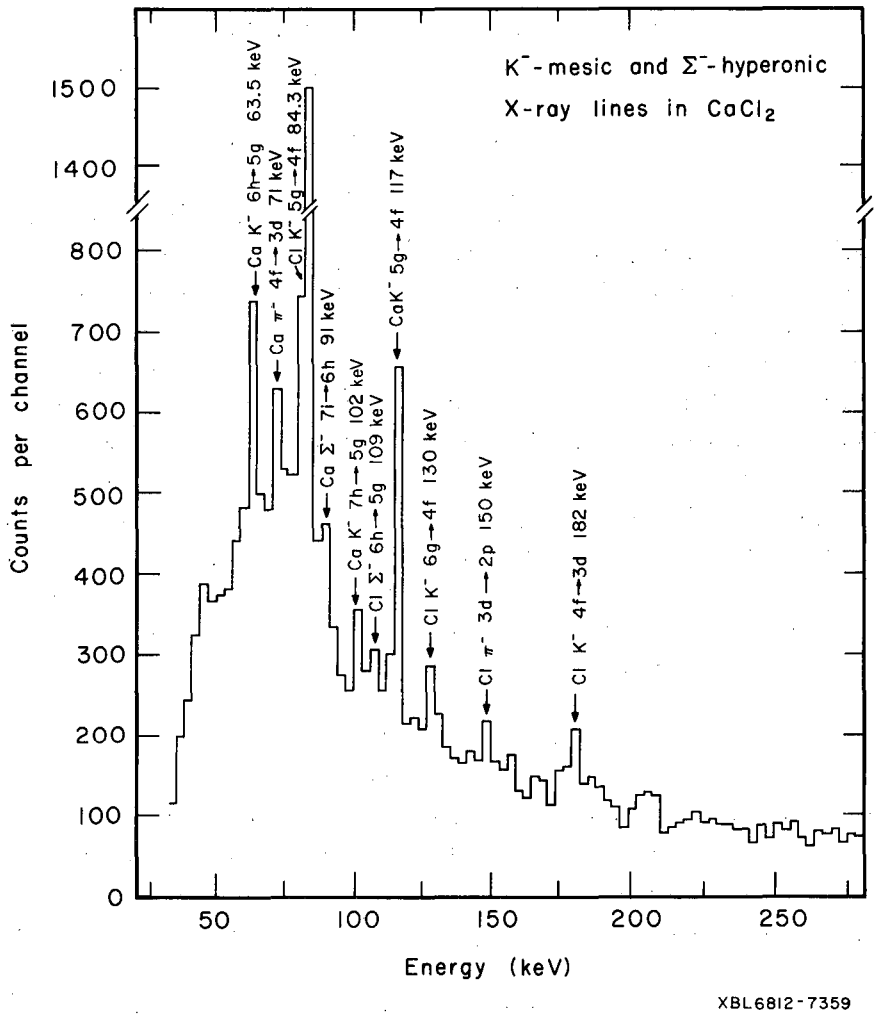

Fig. 1. Counting rate vs energy in the x-ray spectrum from K^- stopped in $CaCl_2$. The figure shows the interpretation of the various peaks.

PIONIC ATOMS

Raymond Kunselman and Georges-André Grin*

The run has been completed at the cyclotron and the x-ray data analyzed. The measurements of chemical effects on the intensities of the x-ray lines in compounds and the measurements on the strong-interaction line shifts and widths in Ca^{40}, Ca^{44}, Th^{232}, and U^{238} are being prepared for publication.

*On leave from Institute de Physique Nucleaire, Université de Lausanne, Switzerland; presently at the Swiss Embassy, Washington, D. C.

NUCLEON-NUCLEON INTERACTIONS

William Chinowsky and William R. Gage

Scanning and measuring of the 6-GeV/c pd interactions is continuing. An additional 20 000 events have been measured with the FSD, and a sample of about 1000 has been measured with the "hand-operated" Franckenstein. At present about 6000 have been processed, reconstructed, and kinematically analyzed to identify the final-state particles. From these, 300 examples of $pd \rightarrow pp\pi^+\pi^-$ have resulted. In disagreement with recent results of Shapira et al. in 7-GeV/c pd interactions, we find no strong evidence for production of $N^*(1470)$. Also, the data appear to be qualitatively in agreement with results of a pion-exchange calculation.

In the 8-GeV/c pd film some 7000 events have been measured. These include 2-, 3-, 4-, 5-, and 6-prong topologies, with the most effort now concentrated on the 3- and 5-prong and 4-prong with stopping proton, so that the pn interactions may be studied. A second scan is in progress, to yield a measure of the scan efficiency. Data analysis has not started, but has been waiting on a better determination of the BNL 80-inch chamber optical-reconstruction constants. These have now been obtained.

Final results on the four-body strange-particle production in 6-GeV/c pp collisions are available in the Ph. D. thesis of S. Klein.[1]

ANTIPROTON-PROTON INTERACTIONS

Ronald Burns,* Paul Condon,* Mark Mandelkern,* Jonas Schultz,* William Chinowsky, and William R. Gage

Analysis of the $\bar{p}p$ interactions continues, with two scans for events with neutral V's completed, and all such events measured. A second scan for two-pion annihilations and backward elastic scatters as well as antineutron interactions is in progress. Beam tracks have been counted in a sample of 10% of the film at each incident momentum, to provide the flux determination for measurements of partial cross sections as a function of energy. Samples of events have been processed with the standard analysis programs. Difficulties, particularly concerned with the determination of optical constants and corrections and alterations required in the unsatisfactory vertex-reconstruction routines have been gradually yielding to programming efforts. Data analysis awaits the complete elimination of these problems.

LOW-ENERGY π^-p INTERACTIONS

William Chinowsky, William R. Gage, John H. Mulvey,† and David H. Saxon†

Measurement of events and data reduction has been completed for the 550-MeV/c incident-pion interaction; the final sample contains 2200 $\pi^+\pi^-n$, 6500 π^-p, and 525 $\pi^-\pi^0p$. A second scan has been made and evaluation of the scanning efficiency for various configurations is in progress. First measurements of the 500-MeV/c interactions has been completed, producing approximately 3800 $\pi^+\pi^-n$ and approximately 3500 elastic scatters. At 450 MeV/c only $\pi^+\pi^-n$ events have been identified and measured. The final sample of these has 2600 events.

---

1. Stanley L. Klein, Four-Body Strange-Particle Production in pp Collisions at 6 BeV/c (Ph. D. thesis), UCRL-18306, September 1968.

*Department of Physics, University of California, Irvine.

†Department of Nuclear Physics, Oxford University, Oxford, England.

Additional photos were taken at Saclay: at approximately 590 MeV/c, approximately 100 000; at approximately 400 MeV/c, approximately 250 000; at approximately 640 MeV/c, approximately 50 000. Analysis of these has not yet begun.

At all momenta the observed Dalitz plot distributions for the $\pi^+\pi^-n$ state show a strong increase in density with increasing $\pi^+\pi^-$ effective mass. At the highest momentum there is a weaker concentration at high π^-n mass. No striking departures from uniform density are apparent in the $\pi^-\pi^0p$ Dalitz plot. Analysis of the angular distributions of the normal to the production plane shows that the $\pi^+\pi^-n$ reaction proceeds at all momenta, through at least two angular-momentum states of opposite parity. These angular distributions vary significantly with position in the Dalitz plot.

The angular distributions of the elastic scatters differ somewhat from previous results,[1] showing a greater slope in the forward direction. A phase-shift analysis then yields results not quite in agreement with those of the CERN group;[2] in particular the P_{13} phase shift is increased to approximately -2.5 deg from approximately -6 deg.

POLARIZATION IN π^+p AND π^-p ELASTIC SCATTERING FROM 250 TO 410 MeV

William Gorn, Charles Morehouse, Thomas Powell, Peter Robrish, Stephen Rock, Stephen Shannon, Herbert Steiner, and Howard Weisberg

More than three-fourths of these data are reduced, now. The results are in good agreement with the work of others, except that we find some disagreement with French results at 410 MeV in π^+ data. There is also still one small correction for a small quadratic effect in the measurement of the target polarization that must be made on all these data.

SEARCH FOR T VIOLATION IN INELASTIC ep SCATTERING

Owen Chamberlain, Gilbert Shapiro, Howard Weisberg, Peter Robrish, Stephen Rock, Stephen Shannon, Richard Taylor,* Luke Mo,* Elliot Bloom,* John Litt,* Henry Kendall,† and Jerome Friedman†

Since there has been difficulty obtaining more than 20 percent proton polarization in the proposed ethanol-water-porphyrexide target, further tests have been run on this target material to measure the thermal conductivity at low temperature. These results clearly indicate that the thermal conductivity is sufficiently low that the sample must be broken up into small pieces to allow the superfluid liquid helium to cool the sample adequately in the presence of heating by microwave absorption. Two methods of arranging good cooling are being pursued. One is to place the target material, while still liquid at room temperature, in a thin teflon container shaped like a small air mattress, which can be folded and inserted in the microwave cavity. The other method consists of using ultrasonic vibrations to break up the frozen alcohol sample once it has been frozen. Neither method is fully tested at present.

---

1. P. M. Ogden, D. E. Hagge, J. A. Helland, M. Banner, J.-F. Detoeuf, and J. Teiger, Phys. Rev. 137B, 1115 (1965); M. Banner, J.-F. Detoeuf, M. L. Fayoux, J. L. Hamel, J. Movchet, L. Van Rossum, J. Cheze, and J. Teiger, Nuovo Cimento 50A, 431 (1967).
2. C. Lovelace, CERN-TH-837 (unpublished); Nucleon Resonances and Low-Energy Scattering, in Proceedings of the Heidelberg International Conference on Elementary Particles, Heidelberg, 1967 (North-Holland, Amsterdam, 1968), p. 79.

*Stanford Linear Accelerator Center, Stanford University, Stanford, California.
†Massachusetts Institute of Technology, Cambridge, Massachusetts.

POLARIZED-PROTON TARGET IMPROVEMENTS

Owen Chamberlain, William Gorn, Charles Morehouse, Thomas Powell, Peter Robrish, Stephen Rock, Stephen Shannon, Gilbert Shapiro, and Howard Weisberg

The horizontal cryostat (for use in the inelastic ep scattering experiment) is largely constructed and tested. It has been run at approximately the desired temperature in a first test arrangement. It will be further tested with more adequate pumping of the liquid-helium system in the coming few months. Design of the final parts with the required thin windows for the entrance and exit of the electron beam is in progress, with construction of the parts to start very soon.

The new polarization readout system (1260 system) has been operating quite well in its 78-MHz version with, however, some indications of unreliability in the electronic system. This indicates that some of the parts will have to be studied and refabricated. The failures are bothersome, but do not prevent the equipment from being used in the current run on backward np scattering.

The 105-MHz version is greatly improved. The resonance that had bothered us earlier was indeed difficult to find, being a resonance of a harmonic of the operating frequency. The nature of the trouble was found by Branko Leskovar, who has also made the needed improvements.

POLARIZATION IN BACKWARD np SCATTERING AT 3 TO 6 GeV

Peter Robrish, Owen Chamberlain, Richard D. Field, Jr., Raymond Z. Fuzesy, Michael J. Longo,* Charles Morehouse, Thomas Powell, Stephen Rock, Stephen Shannon, Gilbert Shapiro, and Howard Weisberg

Near the backward direction for np scattering there is a somewhat puzzling behavior of the differential cross section, namely an unusually narrow peak for scattering directly backward. This is often referred to as charge-exchange scattering near the forward direction.

The experiment to determine more about the amplitude of this charge-exchange process by scattering a neutron beam on polarized protons is in progress at the Bevatron. Some data have been taken, indicating a rate of registering np scattering events of at least 1000 per day. The running of the experiment should be finished in the next few months.

The setup of this experiment and the tune-up of the equipment has been our main occupation during the past 6-month period.

PUBLICATIONS AND PAPERS

1. R. F. Stiening, Comments on the Discrepancies in the Measurement of ξ in $K^+ \rightarrow \pi^0 + \mu^+ + \nu$, UCRL-18231, May 1968.
2. Robert Ronald Kinsey, Zero-Strangeness Resonance Production in 6-GeV/c Proton-Proton Collisions (Ph.D. thesis), UCRL-17707, June 1968.
3. W. Chinowsky, P. Condon, R. R. Kinsey, S. Klein, M. Mandelkern, P. Schmidt, J. Schultz, F. Martin, M. L. Perl, and T. H. Tan, Phys. Rev. 171, 1421 (1968).
4. M. Chen, An Experimental Evidence Against the Angular-Momentum Nonconservation Scheme for Weak Interactions, UCRL-18399, August 1968.

---

*Physics Department, University of Michigan, Ann Arbor.

5. David Cutts, Measurement of the Muon Polarization Vector in $K^+ \rightarrow \pi^0 + \mu^+ + \nu$ (Ph. D. thesis), UCRL-18143, September 1968.
6. Stanley L. Klein, Four-Body Strange Particle Production in pp Collisions at 6 BeV/c (Ph. D. thesis), UCRL-18306, September 1968.

ATOMIC BEAM GROUP

Howard A. Shugart in charge

ATOMIC BEAM STUDIES

In the study of atomic and nuclear properties, members of the Atomic Beam Group use a variety of techniques. The methods of optical or electron pumping, collimated neutral atomic beams, and angular distribution of optical and nuclear radiation play an important role in revealing effects that have bearings on the laws of nature and on the properties of isolated atoms.

One of the major portions of the group's effort is devoted to the systematic measurement of atomic and nuclear properties of radioactive isotopes. This research furnishes knowledge of parameters such as the nuclear spin, the electronic angular momentum, the nuclear multipole moments, the electronic g_J factor, the hyperfine interaction energy between the nucleus and electrons, and other more intricate interactions. In the long run these properties are used as input information in the evaluation of atomic and nuclear theories, and also provide valuable starting points for nuclear spectroscopic studies. All techniques employed in this work involve systems in which the atom is essentially unperturbed by neighbors, as in the atomic beam method; or the atom is subjected to infrequent disorienting collisions, as in the optical-pumping or electron-impact excitation methods.

Owing to the relative simplicity of the system under study, interpretation of results assumes a particularly unambiguous form. This, coupled with the sensitivity of these methods, makes studies of rare radioactive species a productive endeavor.

Beyond the measurement efforts, the group explores new techniques which hold promise of revealing better understanding of physical laws and tries new applications of our standard methods.

The activity of the group during the past six months is indicated by the following list of papers that have appeared in the literature or as reports.

PUBLICATIONS AND PAPERS

Abstracts

1. J. Yellin and R. Marrus, Stark Effect in the Potassium Resonance Lines, Bull. Am. Phys. Soc. 13, 1395 (1968); UCRL-18398, 1968.
2. A. F. Oluwole, S. G. Schmelling, and H. A. Shugart, Hyperfine Structure of 83-min ^{75}Ge and 11-day ^{71}Ge in the $^3P_2$ Electronic State and the Magnetic Moment of ^{75}Ge, UCRL-18505 Abstract, October 1968; submitted to the San Diego Meeting of the American Physical Society, December 18-20, 1968.
3. S. G. Schmelling and H. A. Shugart, Hyperfine Structure and Nuclear Magnetic Moment of ^{165}Tm, UCRL-18516 Abstract, October 1968; submitted to the San Diego Meeting of the American Physical Society, December 18-20, 1968.
4. E. C. Wang, R. Marrus, and J. Yellin, Measurement of the Isotope Shifts in the D_1 Lines of ^{127}Cs, ^{129}Cs, ^{133}Cs, ^{134}Cs, ^{134m}Cs, and ^{137}Cs, UCRL-18513 Abstract, October 1968; submitted to the San Diego Meeting of the American Physical Society, December 18-20, 1968.

5. A. Chong, M. H. Prior, and H. A. Shugart, Nuclear Spin of (40-min) ^{123m}Sn, UCRL-18506 Abstract, October 1968; submitted to the San Diego Meeting of the American Physical Society, December 18-20, 1968.

Papers

1. T. Hadeishi and C.-H. Liu, Alignment of Ionic Ground State of Xe by Electron-Impact Ionization Observed through Exchange Collisions with the Neutral Metastable State, Phys. Rev. 170, 145 (1968).
2. Tetsuo Hadeishi, Observation of Lamb Shifts by Quantum Beats, Phys. Rev. Letters 21, 957 (1968).
3. R. Marrus and J. Yellin, Electric Polarizabilities of the 4 ^{2}p Level of Potassium, UCRL-18354, July 22, 1968; submitted to Phys. Rev.
4. T. H. Duong, R. Marrus, and J. Yellin, Atomic Beam Study of the Rubidium 85, 87 Relative Isotope Shift, Phys. Letters 27B, 565 (1968).
5. R. Marrus, E. C. Wang, and J. Yellin, Atomic Beam Measurement of Isotope Shifts in the D_1 Line of ^{127}Cs, ^{129}Cs, ^{133}Cs, ^{134m}Cs, ^{134}Cs, and ^{137}Cs, UCRL-18349, July 22, 1968; submitted to Phys. Rev.

Theses

1. Orilla Ann McHarris, Radiofrequency Resonances in Mercury and Neon Atoms Excited by Electron Impact (Ph. D. thesis), UCRL-18178, May 24, 1968.
2. Thomas R. Fowler, Precision Atomic-Beam Studies of the Zeeman Effect in Thallium and Gallium (Electronic and Nuclear Magnetic Moments) (Ph. D. thesis), UCRL-18331, August 1, 1968.
3. Murray Steinberg, Experimental Studies on the Metastable Lifetimes in Helium and Neon (Ph. D. thesis), UCRL-18387, August 1, 1968.
4. Edmond Chen-Ching Wang, Atomic Beam Measurement of the Isotope Shifts in ^{127}Cs, ^{129}Cs, ^{133}Cs, ^{134}Cs, ^{134m}Cs, and ^{137}Cs (Ph. D. thesis), UCRL-18434, September 27, 1968.

EXPERIMENTAL PHYSICS

George H. Trilling and Gerson Goldhaber in charge

π^+p INTERACTION AT 3.7 GeV/c

W. Ralph Butler, Donald G. Coyne, and Jimmy N. MacNaughton

We have now completed the first measurements of events found in a 180 000-picture sample of π^+p at 3.7 GeV/c in the 72-inch liquid-hydrogen bubble chamber. About one-quarter of the film has been remeasured, both on the Flying-Spot Digitizer and on the Franckenstein measuring projectors. About 43 000 events have been completely processed, including scan-table confirmation.

Approximately 8000 four-prong, four-constraint fits of the type $\pi^+p \rightarrow \pi^+p\pi^+\pi^-$ are available at present from the set of first and subsequent measurements. These events, supplemented by approximately 6000 events of the two-prong, zero-constraint type $\pi^+p \rightarrow \pi^+p$ (missing mass) from the completely processed sample, are currently being used in a study of the entire 3π mass spectrum. In particular, the question of A_2 structure is being investigated.

Preliminary results have shown that:

(a) Resolution functions for a given set of events, needed for correct analysis of A_2 structure, can be reliably determined.

(b) The resolution in an experiment such as this is sufficiently good to examine fine structure of characteristic widths about 10 MeV (using all 4C events; for 0C events, only a subsample are sufficiently well measured).

(c) We have ruled out the presence of biases which would cause mass shifts in both the 4C and 1C ($\pi^+p \rightarrow \pi^+p\pi^+\pi^-\pi^0$) events by finding the correct mass for the ω meson from the latter type of event.

(d) There is no compelling A_2 splitting effect in our data of the order of the effect seen in previous counter experiments.

Details of these observations will be reported in a paper to be given at the APS New York meeting in February 1969.

K^+d INTERACTIONS FROM 860 TO 1580 MeV/c

Roger W. Bland, Allan A. Hirata, Gerson Goldhaber,
Victor H. Seeger, George H. Trilling, and Charles G. Wohl

We have continued our study of K^+d interactions at 860, 970, 1210, 1360, and 1580 MeV/c. The data sample consists of about 100 000 pictures from the 25-inch bubble chamber. At the four lower momenta, we have completed obtaining data for all events marked topologically by a $K^0 \rightarrow \pi^+\pi^-$ decay or by more than two outgoing tracks. From this sample we have directly measured the cross sections for the following reactions:[1,2]

1. A. A. Hirata, C. G. Wohl, G. Goldhaber, and G. H. Trilling, Phys. Rev. Letters 21, 1485 (1968).
2. A. A. Hirata, C. G. Wohl, R. W. Bland, G. Goldhaber, B. H. Hall, J. A. Kadyk, V. H. Seeger, and G. H. Trilling, K^+d Interactions Near 1 BeV/c, UCRL-18322, August 1968.

$$
\begin{array}{ll}
K^+d \to K^0pp & \text{charge exchange} \\
\quad \to K^0pp\pi^0 & \\
\quad \to K^0pn\pi^+ & \text{single-pion production} \\
\quad \to K^+pp\pi^- & \\
\quad \to KNN\pi\pi & \text{double-pion production.}
\end{array}
$$

We have also been able to deduce the single-pion production cross section in the I = 0 KN channel. This cross section rises rapidly from 1.0 ± 0.4 mb at 860 MeV/c to 8.9 ± 1.8 mb at 1360 MeV/c. We suspect that the rapid rise of this cross section is directly correlated to the bump in the I = 0 KN channel deduced from measurements of total K^+d and K^+p cross sections. Above 1200 MeV/c we find that the single-pion production processes show strong $K^*(890)$ formation. We are currently investigating the $K^*(890)$ production mechanism in terms of various t-channel exchange models.

Λ^0p INTERACTIONS

Gideon Alexander, Peter Gaposchkin, John A. Kadyk, and George H. Trilling

The first part of a run at the Bevatron was completed in which Λ^0 particles were produced by a K^- beam interacting with a platinum plate inside the 25-inch hydrogen bubble chamber. In this manner, a large enough flux of Λ^0p is provided to permit study of Λ^0p scatters that occur inside the chamber. The Λ^0 momentum distributions cover approximately the range 300 to 1200 MeV/c, a region where very little data exist at present. Scanning and measuring is now in progress on the 80 000 pictures taken, in which over 30 000 Λ^0's and about 100 Λp interactions are expected to be produced. When not in use, the platinum plate is easily retracted by means of an external control to allow other experiments to proceed.

$\bar{K}p \to \Lambda\pi$ INTERACTIONS AT LOW ENERGY

Jonathan H. Chan and John A. Kadyk

An analysis was performed on the reactions $K^-p \to \Lambda^0\pi^0$ and $K_2^0p \to \Lambda^0\pi^0$, and the results were submitted to the International High-Energy Physics Conference, held at Vienna in August and September 1968. The analysis used the data from both the K_2^0 and K^- experiments in order to make a more sensitive search for evidence of any Y_1 resonance which might exist in the mass region 1450 to 1510 MeV. Results were obtained both on the absolute cross section and angular distribution for this channel, but no evidence was found for resonance behavior, in spite of indications from several previous experiments that such a resonance might exist in this region. A comparison of the P-wave amplitude observed in this reaction with that expected from the nearby $Y_1^*(1385)$ resonance indicates that substantially all the P-wave observed can be ascribed to this resonance. A more complete partial-wave analysis will be undertaken soon.

K^+p INTERACTIONS AT 9 GeV/c

Gideon Alexander, Alexander Firestone, Chumin Fu, Gerson Goldhaber, and David Lissauer

We have continued the study of 230 000 stereo exposures of K^+p interactions at 9 GeV/c. The film was taken at the Brookhaven National Laboratory 80-inch hydrogen bubble chamber

exposed to an rf-separated K^+ beam using the Berkeley camera. The first 100 000 exposures were taken in October 1966. The work reported so far is summarized below.[1-6]

In recent months we have studied events of the type $K^+p \rightarrow K^+p\omega$, $\omega \rightarrow \pi^+\pi^-\pi^0$ (437 events) in the first sample of film. We find no evidence for ($K\omega$) resonance production and have fit these events to a double-Regge multiperipheral model involving Pomeranchuk and meson exchanges. We have succeeded in applying the entire Dalitz plot, with no cuts performed in the subenergies, as is usually necessary in the presence of strong narrow resonances. The results of this analysis have been presented to the XIVth International Conference on High-Energy Physics, Vienna, 1968, and will be published shortly.[7]

The second sample of film (130 000 exposures) was taken in April 1968 under approximately the same conditions as the first sample. The first scan on the Flying-Spot Digitizer has just been completed, and we are proceeding to analyze the events. With the improved statistics we are continuing our study of the final states $K^+p\pi^+\pi^-$ and $\bar{\Lambda}NN(\pi)$ for more information on the $K^*(1250)$ and $K^*(2240)$ resonances first observed in this work.[1,5]

In addition we have begun the study of the five- and six-body final states $K^0p\pi^+\pi^+\pi^-$ and $K^0p\pi^+\pi^+\pi^-\pi^0$ in a search for possible higher K^* resonances. We have also begun a study of the events in which there is charged antisigma production and continued our study of anti-cascade production.[2]

PUBLICATIONS AND PAPERS

1. D. G. Coyne, W. R. Butler, P. J. Gaposchkin, G. Goldhaber, J. A. Kadyk, J. N. MacNaughton, and G. H. Trilling, Bosons Produced in π^+p Interactions Near 3.7 BeV/c, UCRL-18324 Abstract, July 1968; submitted to the XIVth International Conference on High Energy Physics, Vienna, 1968.
2. R. W. Bland, G. Goldhaber, B. H. Hall, and G. H. Trilling, Search for a K^* Below $K\pi$ Threshold, Phys. Rev. Letters 21, 173 (1968).
3. G. Alexander, A. Firestone, C. Fu, G. Goldhaber, and A. Pignotti, Study of ω and ϕ Production in K^+p Interactions at 4.6 and 9.0 GeV/c, UCRL-18321, July 1968; contribution to the XIVth International Conference on High Energy Physics, Vienna, 1968.

---

1. G. Goldhaber, A. Firestone, and B. C. Shen, Evidence for $K^*(1250)$ Resonance Production in K^+p Interactions at 9 BeV/c, Phys. Rev. Letters 19, 972 (1967).
2. B. C. Shen, A. Firestone, and G. Goldhaber, Antixi Production in K^+p Interactions at 9 GeV/c, Physics Letters 25B, 443 (1967).
3. G. Goldhaber, Interference Phenomena Associated with Boson Resonance Production, Phys. Rev. Letters 19, 976 (1967).
4. A. Firestone, G. Goldhaber, and B. C. Shen, Confirmation of the L Meson by Use of a Hydrogen Bubble Chamber as a Missing-Mass Spectrometer, UCRL-17833, September 1967; contribution to the Heidelberg International Conference on Elementary Particles, September 20-27, 1967.
5. G. Alexander, A. Firestone, G. Goldhaber, and B. C. Shen, Evidence for a Mass Enhancement in the $\bar{\Lambda}N$ System, Phys. Rev. Letters 20, 755 (1968).
6. G. Alexander, A. Firestone, and G. Goldhaber, Search for S = 2 Boson Resonances in the Mass Region of 1.0 to 3.1 GeV, Phys. Letters 27B, 177 (1968).
7. G. Alexander, A. Firestone, C. Fu, G. Goldhaber, and A. Pignotti, Study of ω and ϕ Production in K^+p Interactions at 4.6 and 9.0 GeV/c, UCRL-18321, July 1968; to be published in Phys. Rev.

4. A. A. Hirata, C. G. Wohl, R. W. Bland, G. Goldhaber, B. H. Hall, J. A. Kadyk, V. H. Seeger, and G. H. Trilling, K^+d Interactions Near 1 BeV/c, UCRL-18322, August 1968; contribution to the XIVth International Conference on High Energy Physics, Vienna, 1968.
5. R. W. Bland, G. Goldhaber, B. H. Hall, J. A. Kadyk, V. H. Seeger, G. H. Trilling, and C. G. Wohl, K^+p Interactions Near 1 BeV/c, UCRL-18323, July 1968; contribution to the XIVth International Conference on High Energy Physics, Vienna, 1968.
6. J. A. Kadyk, J. H. Chan, G. Goldhaber, and G. H. Trilling, Momentum Dependence of Cross-Section and Angular Distributions of Reactions $K^-p \rightarrow \Lambda\pi^0$, $K_2^0p \rightarrow \Lambda\pi^+$ Near Threshold, UCRL-18325, August 1968; contribution to the XIVth International Conference on High Energy Physics, Vienna, 1968.
7. G. Alexander, A. Firestone, and G. Goldhaber, Search for S = 2 Boson Resonances in the Mass Region of 1.0 to 3.1 GeV, Phys. Letters 27B, 177 (1968).
8. Chumin Fu, Study of the Reaction $K^+p \rightarrow K^0\pi^+p$ at 4.6 GeV/c and a Review of the Available Data, UCRL-18417, August 1968; contribution to the XIVth International Conference on High Energy Physics, Vienna, 1968.
9. W. R. Butler, R. W. Bland, G. Goldhaber, S. Goldhaber, A. A. Hirata, T. O'Halloran, G. H. Trilling, and C. G. Wohl, A Study of 10 000 τ^+ Decays, UCRL-18420, August 1968; contribution to the XIVth International Conference on High Energy Physics, Vienna, 1968.
10. G. Alexander, G. Goldhaber, and B. H. Hall, Reexamination of Deuteron Cross Sections and the I = 0 K^+N Enhancement at 1.15 BeV/c, UCRL-18365, July 1968; contribution to the XIVth International Conference on High Energy Physics, Vienna, 1968.
11. A. A. Hirata, C. G. Wohl, G. Goldhaber, and G. H. Trilling, K^+d Partial Cross Sections Around 1 BeV/c, UCRL-18430, August 1968; submitted to Phys. Rev. Letters.

EXPERIMENTAL PHYSICS

Chester M. Van Atta in charge

PLASMA PHYSICS

The Plasma Physics Group continues to conduct experimental and theoretical research on basic plasma and related atomic physics problems. Topics under investigation during this period include experimental studies of high-frequency electric fields in a plasma by observation of two-quantum transitions, laser light scattering by a sheet pinch, turbulence in a positive column, transport by diffusion and convection in a hollow-cathode discharge plasma, fast excited-hydrogen-atom creation and destruction in vapors and thin carbon foils, and fluctuation levels in a cold, microwave-produced plasma. Theoretical topics include a steady-state mirror plasma with external conducting walls, diffusion of trapped particles by random fields, the kinetic equation for three-wave coupling, and the evolution of a system with a random Hamiltonian.

Several members of the group participated in electron-ring-accelerator experiments (see the Accelerator Operation and Development section of this report).

PUBLICATIONS AND PAPERS

1. K. H. Berkner, B. R. Myers, and R. V. Pyle, Pyroelectric Ceramics as Detectors of Fast Atomic Beams, Rev. Sci. Instr. 39, 1204 (1968).
2. R. V. Pyle, K. H. Berkner, and J. W. Stearns, Collisional Cross Sections of 10-MeV H^0 and 20-MeV H_2^+ in Carbon Foils, UCRL-18167 Abstract, April 1968; Bull. Am. Phys. Soc. 13, 907 (1968).
3. M. W. Halseth and R. V. Pyle, Turbulence of a Positive Column in a Strong Magnetic Field, UCRL-18168 Abstract, April 1968; Bull. Am. Phys. Soc. 13, 881 (1968).
4. W. S. Cooper and H. Ringler, Spectroscopic Measurement of High-Frequency Electric Fields in a Plasma by Observation of Two-Quantum Transitions and Spectral Line Shifts, UCRL-18170 Abstract, April 1968; Bull. Am. Phys. Soc. 13, 905 (1968).
5. K. H. Berkner, R. V. Pyle, and J. W. Stearns, Electron-Capture and Loss Cross Sections of 5- to 70-keV Hydrogen Ions in Magnesium Vapor, UCRL-18341 Rev., September 1968; to be published in Phys. Rev.
6. K. H. Berkner, W. S. Cooper III, S. N. Kaplan, and R. V. Pyle, Cross Sections for Electron Capture into the Excited Level n = 6 of Hydrogen by 5- to 70-keV Protons in Mg Vapor and in Neon, UCRL-18342, October 1968; submitted to Phys. Rev.
7. W. S. Cooper III and H. Ringler, Spectroscopic Measurement of High-Frequency Electric Fields in a Plasma by Observation of Two-Quantum Transitions and Spectral Line Shifts, UCRL-18440, September 1968; submitted to Phys. Rev.
8. P. R. Forman and W. B. Kunkel, Determination of Neutral-Atom Density in a Highly Ionized Decaying Hydrogen Plasma, Phys. Fluids 11, 1528 (1968).

25 - INCH HYDROGEN BUBBLE CHAMBER

Wilson M. Powell, John A. Kadyk, and Glenn J. Eckman in charge

The bubble chamber has remained in its position on the new caisson outside the external-proton-beam hall, where little additional settling has occurred. An unusual series of difficulties have beset the chamber operation as noted below.

Gas Purity

The impure hydrogen gas reported last period continued to be a source of trouble and eventually plugged the chamber heat exchangers again, necessitating a complete warm up. Despite a number of purges and long pump-downs of the cylinders, the gas still contained excessive nitrogen. A Serfass hydrogen purifier of the palladium-alloy type was ordered and recently received. A testing program for this unit is in process and will be completed prior to its being put into service. This unit should remove all measurable quantities of impurities of the gas as received from the suppliers. Continued purification of the gas from our refrigeration compressor will still be necessary and this operation needs to be improved.

Magnet Shorts

It was noted previously that there was a relatively high resistance short to ground in the magnet. The short later dropped in resistance such as to become of concern and its location within the magnet was located. The magnet voltages were adjusted such as to place the shorted area at ground potential and operation continued. Later the ground current from the magnet became excessive, and it was determined that there were additional shorts developing which varied in resistance in random fashion and which dictated magnet disassembly. When taken apart, the magnet pancake coils were found to be wetted through, which was attributable to condensation build up.

The shorted areas were found to coincide with porous insulation. All surfaces of all the magnet pancakes were then worked over to repair the shorted areas as well as other potentially weak areas. Efforts have been made to reduce the troubles caused by condensation both in the reassembly of the magnet and in the procedures of operation. The overhaul of the magnet with the associated testing and measurements required 8 weeks. The chamber was disassembled and cleaned, and other general repairs were made simultaneously with magnet repair. We believe there will be no future troubles in this magnet with leakage or shorts to ground. However there is a possibility of a short within the winding of an individual pancake. Since a short of this nature would require an extended down time, a spare pancake coil has been ordered.

Refrigeration Compressor

In early October the third- and fourth-stage rings of the high-pressure hydrogen compressor used for the closed-circuit refrigeration system suddenly started to wear out. Five separate sets of rings were "dissolved" in 6 days of operation. On one occasion a completely different third- and fourth-stage assembly (i.e., cylinders, piston rings, and valves) was used, but this ran 32 hours instead of the usual 3000. The lubricating oil used is the suspected cause, though both supplier and independent-laboratory reports indicate the oil to be within normal

specifications. Further investigation will be made. The solution to date has been to use a special reinforced double-seal bronze ring.

A considerable increase in the downstream impurities from the compressor as shown in the low-temperature purifiers is a further indication that decomposition products or unusual impurities are in the lubricating oil.

Two weeks were lost because of compressor failure.

Despite the difficulties, the 25-inch chamber has produced 415 rolls of film for three separate experiments as shown in the following breakdown:

Exposure Number	Particles	Rolls	Pictures
72	π^+	159	257 601
73	K^-	245	370 619
76	K^- (platinum target in)	11	18 150

HEALTH PHYSICS

H. Wade Patterson in charge

LOW-BACKGROUND COUNTING FACILITY

Alan R. Smith and Harold A. Wollenberg

The Building 72 low-background counting facility has been in continuous use since its construction in early 1963. Facility use has developed into a pattern of multiple-detector operation, rather than the single-detector operation that is characteristic of many other similar-size facilities: i.e., whole-body counters. The multiple-detector capability has been expanded, so we now can use nine separate gamma-ray detectors [four NaI(Tl) crystals, four plastic scintillators, and one Ge(Li) crystal] simultaneously, each without affecting the low-background environment of the other detectors. Isolation of detectors is provided by 2- to 4-inch-thick close-fitting shields constructed of specially-selected low-activity Pb bricks.

In addition to the regular counting analyses of activation detectors and other radioactive samples, we continue to study the causes of the small background (BKG) count rates observed in the gamma-ray detectors, with an aim toward further reduction of these residual responses. The BKG in all our NaI(Tl) scintillation crystals, except the largest unit (an 8-in.-diam, by 4-in.-thick crystal), remains constant within the limits of counting statistics. A small variation is observed in this large crystal; for example, within the gamma-ray energy interval 0.1 to 2.1 MeV, a total variation of 7 c/min was observed in a recent study, compared to the mean BKG value of 305 c/min. This BKG variation correlated with variation of the cosmic-ray muon flux, as determined simultaneously in the same crystal. Therefore, measurement of the muon flux can be used to compensate for BKG variation during counting of very low-activity samples. The BKG-vs-muon relationship also predicts that about 80% of the present BKG is associated with the muons. If such be the case, an external large-area anticoincidence counter positioned just above the Pb isolation shield could eliminate most of this component, without imposing any of the additional constraints on use of the NaI(Tl) crystal that usually accompany anticoincidence counter "shielding." The anticoincidence-counter tests are planned for the immediate future.

RADIOGEOLOGY

Harold A. Wollenberg and Alan R. Smith

Evaluation of radioactivities of granitic terranes in the Coast Ranges north of San Francisco Bay indicate that there is a wide range of U, Th, and K values, consistent with the range previously observed in the Santa Cruz Mountains' granitics.

Preliminary determinations by the fission-track method of Th contents of sphene from the Sierra Nevada batholith indicate that Th is apparently absent in sphene in some plutons, while in others it reaches concentrations of several hundred ppm.

MEDICAL SPARK CHAMBER PROJECT

Alessandro Rindi and Harold A. Wollenberg

Studies continued in the application of wire spark chambers for medical purposes. This work is discussed fully in the report of the Moyer-Helmholz group.

EVALUATION OF FLUXES AND DOSE-EQUIVALENT RATES IN NEUTRON FIELDS AROUND HIGH-ENERGY PROTON ACCELERATORS

Alessandro Rindi

An analysis has been made of the errors involved in routine measurements of flux and dose equivalent around high-energy accelerators. By use of some typical neutron spectra from multidetector measurements made around the accelerators at the Lawrence Radiation Laboratory, Berkeley, and the proton synchrotron at CERN, Geneva, a calculation has been made of the errors involved when only one detector is used for evaluating the total neutron flux and corresponding dose-equivalent rate. The correction factors to be applied to the routine measurements in these fields have been calculated, and a method is proposed for minimizing the errors.[1] A CDC-6600 computer was used to make the calculations.

NUMERICAL SOLUTION METHODS FOR FIRST-ORDER FREDHOLM INTEGRAL EQUATIONS

Jorma T. Routti

Two generalized least-squares methods have been developed for the numerical solution of first-order Fredholm integral equations. The solution is approximated by a piecewise linear function and is obtained by minimizing a quadratic form. For the mathematical stability and uniqueness of the solution, any amount of prior information may be specified for the smoothness and shape of the solution. The first technique employs matrix inversion; the second method, which also imposes a nonnegativity condition, uses an iterative gradient algorithm. Two computer programs have been written that include complete testing options and provisions for off-line and on-line runs.

The methods have been tested and successfully applied to several physical unfolding problems. These include neutron spectroscopy with threshold detectors, Bonner spheres, and emulsions, as well as fission studies of heavy nuclei.[2]

CONTINUING PROJECT: 88-INCH-CYCLOTRON CAVE-4 SHIELDING STUDIES

Lloyd D. Stephens

Work is continuing on a comprehensive study of the stray radiation pattern along the Cave-4 beam-transport system. The purpose of this study is to give a reasonable basis for the design of the most efficient shielding possible. There are limitations on both the space available and funds.

To data several different ions have been accelerated and the radiation patterns produced by these ions have been mapped and quantitatively measured.

Shielding effectiveness has been studied at the 88-inch cyclotron and reported[3] in terms of concrete, concrete and steel, and concrete and depleted uranium. We plan to use this information in the final shielding recommendations soon to be made.

1. Alessandro Rindi, Evaluation of Fluxes and Dose-Equivalent Rates in Neutron Fields Around High-Energy Proton Accelerators, UCRL-18424, August 1968.
2. L. G. Moretto, R. C. Gatti, S. G. Thompson, J. T. Routti, J. H. Heisenberg, L. M. Middleman, M. R. Yearian, and R. Hofstadter, Electron and Bremsstrahlung-Induced Fission of Heavy and Medium-Heavy Nuclei, UCRL-18535, October 1968.
3. A. J. Miller and W. W. Wadman, Neutron Attenuation Studies for Medium Energy Cyclotron Beams, UCRL-18280, June 1968.

RANGES AND STOPPING POWER OF HEAVY IONS IN NONGASEOUS MEDIA

Roger W. Wallace

A method for calculating the range and stopping power of any nongaseous medium for a wide range of heavy ions has been completed,[1] and the data obtained has been used to calculate the shape of the resulting Bragg peaks for all ions in a complete range of stopping media.[2] This work is now being extended to include more realistic beam configurations and the biological effectiveness of the radiation when tissue is the medium.

Work has been initiated on the use of newly available sectoring methods for calculating neutron fields around accelerators with more realistic geometries than have been possible in the past. This work will first deal with the "neutron cube" problem.

PUBLICATIONS AND PAPERS

1. Palmer Steward, Stopping Power and Range for Any Nucleus in the Specific Energy Interval 0.01- to 500-MeV/amu in Any Nongaseous Material (Ph. D. thesis), UCRL-18127, May 1968.
2. Alessandro Rindi, Evaluation of Fluxes and Dose-Equivalent Rates in Neutron Fields Around High Energy Proton Accelerators, UCRL-18424, August 1968; for Health Physics Society Midyear Topical Symposium, Los Angeles, January 29-31, 1969.
3. Harold A. Wollenberg, H. Wade Patterson, Alan R. Smith, and Lloyd D. Stephens, Natural and Fallout Radioactivity in the San Francisco Bay Area, UCRL-18460, September 1968; to be submitted to Health Physics.
4. L. G. Moretto, R. C. Gatti, S. G. Thompson, J. T. Routti, J. H. Heisenberg, L. M. Middleman, M. R. Yearian, and R. Hofstadter, Electron and Bremsstrahlung-Induced Fission of Heavy and Medium-Heavy Nuclei, UCRL-18535, October 1968.

---

1. Palmer G. Steward, Stopping Power and Range for Any Nucleus in the Specific Energy Interval 0.01- to 500-MeV/amu in Any Nongaseous Material (Ph. D. thesis), UCRL-18127, May 1968.
2. Gerald M. Litton, Penetration of High-Energy Heavy Ions, with the Inclusion of Coulomb, Nuclear, and Other Stochastic Processes (Ph. D. thesis), UCRL-17392, August 1967.

Computing and Data Handling

MATHEMATICS AND COMPUTING

James A. Baker in charge

During the period of this report (May 1968 through October 1968), members of the Mathematics and Computing group provided programming and mathematical consulting services for Laboratory research groups and performed research in mathematics and computer science. The effort may be divided into the following four general classifications:

I. Applications Programming
   A. Physics
   B. Nuclear Chemistry
   C. Accelerator and Magnet Design
   D. Biomedical Applications
   E. Miscellaneous
II. Systems Programming
III. Research in Mathematics and Computer Science
IV. Computer Operations

The following summarizes the work of this Group in the above areas:

I. APPLICATIONS PROGRAMMING

A. PHYSICS

For Powell-Birge Group

Herbert C. Albrecht, Myron H. Myers, Joan Tyson, and John Visser, Jr.

COBWEB System

The COBWEB[1] system, a computer-controlled bubble chamber film-measuring system, continues to be expanded. One Franckenstein, ionization hardware, and six scan-table teletypes have been added. This makes a total of four Franckensteins, a measuring microscope, and seven scan-table teletypes connected with the system.

The COBWEB program has been expanded to handle a maximum of 18 devices. The software system is organized around 18 control points, one per device. The scanning procedure was rewritten for multiple scan-table teletypes. The concept of an executive control point was added to facilitate the execution of parallel functions.

Complete documentation of the software is in progress. A paper, UCRL-18528, was presented at the International Conference on Advanced Data Processing for Bubble and Spark Chambers held at the Argonne National Laboratory on October 28-30, 1968. A paper that covers the COBWEB system in more detail has been completed.[2]

1. Herbert C. Albrecht, Eugene P. Binnall, Robert W. Birge, Myron H. Myers, and P. Wes Weber, COBWEB: Data Reduction System, UCRL-18528, October 1968.
2. UCRL-18528-Revised, October 1968.

Routine maintenance to save memory space has included the recoding of permanent utility functions in machine language, and redesigning certain data-storage areas. The memory thus conserved has been used for additional system features. The COBWEB program has been extensively parameterized so that physicists have more flexibility in specifying types of data checks, tolerances, and event-type shortcuts. Ionization data is now handled from one measuring projector. Work has been completed so Experiment 76 of the Trilling-Goldhaber group, which requires a unique measuring philosophy, can be measured using the COBWEB system.

The CDC 6600 COBWEB editing program, COBEDIT,[3] can now generate STA tapes as inputs to the FSD system. This makes it possible to "remeasure" on the FSD those events that contain points and tracks that are known to be good.

Bookkeeping System

The statistical summaries of the bookkeeping system, BOOKY,[4] were carefully scrutinized and rearranged for clarity. The summary tallies and logic were checked for correctness. Character-string handling routines were added to make such character manipulations faster and easier to define.

Modifications were made to BOOKY to keep track of remeasures which have been requested through the accounting system. The program automatically flags events requested for remeasure and keeps a count of the remeasurements as they are made. The user may also select on the remeasure flag. Work has begun on implementing a functional notation for manipulating master-list variables.

Miscellaneous

A program, COBIZ, has been written which produces ionization histograms from COBWEB M44 tapes. Ionization values recorded on the MP1D Franckenstein are collected; histograms, histogram averages, and errors are printed for each track.

The sigma polarization program, DSPLAY,[5] was modified several times. Modifications included inserting additional calculations and adding a new event type.

A tape containing all components of the MODULES package,[6] along with a main program (DSPLAY) was prepared. This main program is designed to allow general usage of the display routines by simply specifying parameters on a single control card.

For Trilling-Goldhaber Group

Richard Ahlstrand, Derik Armstrong, Emmett Burns,
Bronwyn Hall, Daniel Lamb, and James Miller

During the past six months, normal maintenance work for new and continuing experiments was carried out, as well as several special projects for members of the Trilling-Goldhaber Group.

---

3. Physics Division Semiannual Report (henceforth abbreviated "PDSR"), UCRL-18235, May 1968, p. 76.
4. PDSR, UCRL-18235, May 1968, p. 75.
5. PDSR, UCRL-18235, May 1968, p. 76.
6. PDSR, UCRL-17876, November 1967, p. 51.

A continued effort was made in TGIF[7] to improve classes of events which still cause trouble. Several insights were obtained, and the required changes will be implemented in TGIF and SIOUX.[8]

Most of the work with SIOUX involved a detailed analysis of a small sample of events in order to determine if any modifications could be made to the program or constants in order to improve the resolution of various quantities. Some constants were found to be slightly inaccurate and have been corrected. Additional work was done in SIOUX in order to process a new experiment with a platinum plate inside the bubble chamber. Modifications were also made in order to retrieve master-list information previously lost if an arithmetic error restart occurred. Various versions of ARROW[9] were maintained and modified. Development work was started on a filtering scheme which will enable the user to more easily set up logical selection criterial with data cards.

A new input/output package was written for CHAOS[10] which will significantly reduce the number of summary tapes required for all experiments and also allow the user more freedom in his choice of formats.

New capabilities were added to MLIST[11], a bookkeeping program, and work was begun on a new version which will consolidate all event accounting into one program.

Work continued on a new version of PHONY[12] which should be completed in the near future. The new version should decrease execution time by a factor of two for most applications. A new write-up, How to Set Up Phony,[13] is now available from the Trilling-Goldhaber Office.

The two-phase-shift analysis programs FASE3 and KDFASE were modified and used extensively on K^+p and K^+d differential-cross-section data in order to determine the K^+ nucleon $I = 0$ and $I = 1$ phase shifts.[14, 15]

The program HULTHEN[16] was used to evaluate the magnitude and position of an anomalous effect at 1.15-GeV/c K^+ incident momentum, and 800-MeV/c π^- and π^+ incident momentum.[17] In conjunction with this, a general purpose "folding" program, HFOLD, for total-cross-section measurements was written.

---

7. Dave Johnson, Preliminary Trilling-Goldhaber Input Format (TGIF), Alvarez Memo No. P-118 (not for distribution outside of Lawrence Radiation Laboratory).
8. O. Dahl and F. Solmitz, Event Type Primer for TVGP and SQUAW (SIOUX), Alvarez Programming Note P-139, May 1966.
9. C. A. Romascan, R. W. Casey, F. R. Tonisson, and O. I. Dahl, 6600 ARROW System, Alvarez Programming Note P-147, August 1966.
10. PDSR, UCRL-11132, November 1963, p. 51 (or see Derek Armstrong, Mathematics and Computing).
11. PDSR, UCRL-17282, January 1967, p. 28.
12. E. Burns and D. Drijard, PHONY (preliminary write-up), Trilling-Goldhaber Technical Note 143, March 1968.
13. E. Burns, How to Set Up PHONY, Trilling-Goldhaber Technical Note 149, October 1968
14. R. W. Bland, G. Goldhaber, B. H. Hall, J. A. Kadyk, V. H. Seeger, G. H. Trilling, and C. G. Wohl, K^+p Interactions Near 1 BeV/c, UCRL-18323, July 1968; contribution to 14th International Conference on High Energy Physics, Vienna, August 28-September 5, 1968.
15. A. H. Hirata, C. G. Wohl, R. W. Bland, G. Goldhaber, B. H. Hall, J. A. Kadyk, V. H. Seeger, and G. H. Trilling, K^+d Interactions Near 1 BeV/c, UCRL-18322, August 1968; contribution to 14th International Conference on High Energy Physics, Vienna, August 28-September 5, 1968.
16. PDSR, UCRL-18235, May 1968, p. 77.
17. G. Alexander, G. Goldhaber, and B. H. Hall, Reexamination of Deuteron Cross Sections and the $I = 0$ K^+N Enhancement at 1.15 BeV/c, UCRL-18365, July 1968; contribution to 14th International Conference on High Energy Physics, Vienna, August 28-September 5, 1968.

Work was begun on a program LAMP, which does a Monte-Carlo calculation of the reaction $K^+d \rightarrow \Sigma\pi n(p)$, $\Sigma n(p) \rightarrow \Lambda^0 p$, and the background reactions $K^+d \rightarrow \Lambda^0\pi^- p$, $\Lambda^0 p \rightarrow \Lambda^0 p$, and $K^+d \rightarrow \Lambda^0\pi^- p$.

For Lofgren Physics Group

Joan P. Tyson, Leslie D. Wilson, and Donald H. Zurlinden

Programs for scanning the output from Bevatron Experiment No. 67, the K_{e_2} branching experiment, are near completion. Programming is completed for defining the chambers in the SASS system and scanning the film. The reconstruction routine was expanded to allow for a beam chamber, a large cylindrical chamber, and a small cylindrical chamber. Documentation has begun, and most of the SCAMP processing sections are completed.

Programs for the nucleon-nucleon triple-scattering experiment have been further developed and extended. PSORBT and PSGLOP[18] have been incorporated into a new program SURKGP which carried analysis of the data through the stage of momentum determination and tests for elastic scattering. Various angles and measurements are histogrammed as a check on the alignment of the chambers.

For Moyer-Helmholz Group

Fredric Gey, Ruth Hinkins, and Leslie Wilson

Spark Chambers

Basic programming for the $\pi^- {}^3He$ cyclotron scattering experiment has been completed. Additions and improvements will be made as actual data arrives for processing. An intermediate tape is being written after the raw data is processed, bad events deleted, and spark positions in each chamber are determined. This tape is then used for momentum determination.

The program BCGLOP has been written to analyze data from the K_{e_4} experiment. Data from twelve wire chambers is received on tape generated by a PDP-5.[4] Determination of probable spark locations is performed in chamber coordinates, then the locations are transformed to a global coordinate system and written on tape for analysis by the track reconstruction program.

IBM-360 Tape Conversion

CVRT360, a package of FORTRAN IV subroutines to convert binary tapes from IBM-360 to CDC-6600 format, is near completion. Fixed-point and floating-point conversion is already available, while a character-conversion routine is under development. The program has already converted several data tapes obtained from SLAC.

For Segrè-Chamberlain Group

Willard McCarty

Various modifications and improvements were made to existing programming systems; namely, ARROW[19] (the EPC unpacking and printing routines, APACHE, and PANAL.[20] Two

18. PDSR, UCRL-18235, May 1968, p. 79.
19. Op cit., see footnote 9.
20. M. Alston, et al., PANAL, Alvarez Programming Note 358 (Rev.), February 1, 1963.

major considerations, increase in processing speed and reduction of required core storage, dominated these projects. To this end, the FORTRAN extended compiler, the LRL central processor loader, and a few more sophisticated techniques were implemented.

B. NUCLEAR CHEMISTRY

Noel Brown, Penelope Collom, Martin Itzkowitz, Gerald Litton, Elizabeth Quigg, Claudette Rugge, and Esther Schroeder

Multidimensional Experiments

In July, Nuclear Chemistry support undertook a large project, the development of the "MULTI-D" package for on-line acquisition of data from a multidimensional experiment with additional capabilities of (1) digital gain stabilization on a maximum of eight dimensions, (2) sorting and display of any of a maximum of eight spectra by keyboard command, (3) dumping of all data on magnetic tape for later analysis on the 6600, and (4) eventual analysis of the spectra.

The program is divided into five main sections: (1) the monitor, to control time-sharing between the other four sections, (2) the keyboard command and interpretation section, (3) the sorting section, (4) the updating section, and (5) the ADC/magnetic tape section to handle input and output.

The first version of the package has been written and is ready for use in an experiment. Additional features are currently being included.

Small Computer Systems

PDP-7

MEDUSA,[21] the PDP-7 time-sharing system, has been debugged and is running satisfactorily. Further improvements will be made as more users' programs are run under the system.

Electron Spectrometer Control System

The initial Field-Free Laboratory PDP-8 System for control of the electron spectrometer went into production in August 1968. It has, for all practical purposes, replaced the mechanical control of the spectrometer. As it stands, the system incorporates all devices except the CalComp plotter, which should be available in about a month. Documentation is being prepared. Some study has been made of various types of storage devices that will be required when a second spectrometer is introduced into the system.

PDP-9–6600 Data Link

Design studies have been initiated for a data link between the PDP-9 and the CDC 6600. The link will, in part, include the hardware originally designed for the PDP-5 link.

PDP-9 Magnetic Tape Handler

In order to develop flexible means of data transmission between the PDP-9 and the 6600, several device handlers for the magnetic tape unit have been written. These handlers allow the

21. Penny Collum, MEDUSA–Its Use and Operation, available in the Computer Center Library.

PDP-9 to read and write magnetic tapes in data formats which can be read by the 6600 or 1401.

PDP-9 Card-to-Paper-Tape Converter

A routine, CDPAPER, was written which converts assembly-language programs punched on IBM cards to punched paper tape. This eliminates the necessity of tying up the PDP-9 with on-line punching.

PDP Program Library

Work has begun on developing a library of PDP routines at our installation. The programs will reside in memory in a mass storage device on the 6600. Writeups will be available in the Computer Center library.

Spectral Analysis

In conjunction with the study of the systematics of hyperfine fields at solute nuclei in ferromagnets,[22] two programs were written to do nonlinear least-squares analysis. Program COSFIT7 fits time-differential angular-correlation spectra below the Curie point. Program FOREX fits time-differential perturbed angular correlations above the Curie temperature. Both programs were modified to include fitting damping parameters, and program FOREX was expanded to include the possibility of doing a Fourier transform on the data.

Program LOWTEMP was written to calculate and plot the fission-fragment angular distributions for a low-temperature experiment on the spontaneous fission of odd mass numbers or odd-odd isotopes as a function of nuclear spin and temperature.

For the analysis of multidimensional fission fragment experiments, major modifications were made to programs TEASE,[23] CALIB, and MASORT,[24] and a new program CONSPIRE was written. Program TEASE separates and packs onto magnetic tapes the multidimensional nuclear-data analyzer events into at most four general event types. The program produces printer plots of the distributions for all event types in all dimensions for each input tape, and adds together and plots any specified event types over an accumulation of input tapes. Program CALIB calculates for each input tape energy calibration constants based on the output of program TEASE. It also calculates average values and Doppler shift factors.

Program MASORT uses the calibration constants of program CALIB and the event-type sorted tapes from program TEASE to accumulate fission-fragment mass spectra within specified total kinetic-energy limits of one dimension (say, x-ray), with possible limits in another dimension (say, electron). Program CONSPIRE produces CalComp plots of the mass-sorted data from program MASORT.

Program TAILSIG[25] is used to fit modified Gaussians to stabilizer spectra of known peak energies to obtain energy calibration and peak shape parameters. Program AIRLIFT[26] is used to fit the complex mass spectra and background. It has been modified to allow for

22. D. A. Shirley, S. S. Rosenblum, and E. Matthias, Hyperfine Fields at Solutes in Ferromagnets: Cadmium and Ruthenium in Nickel, Phys. Rev. 170, No. 2, 363-378 (1968).
23. PDSR, UCRL-17876, November 1967, p. 53.
24. PDSR, UCRL-17282, January 1967, p. 29.
25. PDSR, UCRL-17876, November 1967, p. 54.
26. PDSR, UCRL-18235, May 1968, p. 80

energy calibration, functional or tabular shape parameters, and the restraining but nonelimination of extraneous guessed peaks.

QUARTET is a coincidence spectral-analysis program. Data may be calibrated if a calibration spectra is included. It is then analyzed several ways, and the results plotted.

Cross Sections

Programming assistance was given in the development of programs SCATERV, SCATERT, and ROBERT. SCATERT computes the cross section for excitation of the analogue rotational band in (He^3,T) reactions. SCATERV computes the cross section of alpha particles from deformed nuclei in which the shape is nonstatic; that is, the vibrational degrees of freedom are included. ROBERT computes the cross section for two-nucleon transfer reactions including the effects of inelastic scattering.

Program FIT was developed to fit experimental-data-measuring cross sections of first-chance fission. The data from approximately twelve cases primarily dealing with polonium, lithium, and tungsten remain to be processed.

Miscellaneous

The program DSAXON was written to determine the binding energy of particles in a deformed potential of the Wood-Saxon form. Program TSANG was written to calculate fission-barrier penetration. It was applied in particular to the superheavy elements.

C. ACCELERATOR AND MAGNET DESIGN

Victor Brady, Bruce Burkhart, Elon Close, John Colonias, Nigel Harrison, Robert Healey, Ardith Kenney, Barbara Levine, Bobby Powell, and Steven Sackett

Magnet Design

Program TRIM[27] is used for production by various groups within the Laboratory, as well as groups at other laboratories.

Program LINDA,[28] a general-purpose, two-dimensional magnetostatic program, is used extensively in the design of the 200-BeV machine in Weston.

A beta-ray spectrometer is being designed. Various coil configurations are being optimized. The effect of the earth's magnetic field on the spectrometer has been investigated, and coils have been designed to cancel this effect.

A two-dimensional, electrostatic program, JASON, is under development. This code is designed for high speed and accuracy and can handle insulators and nonisotropic, nonhomogeneous dielectrics. A UCRL report is in preparation.

A version of this program is presently used in the design of an experimental electrostatic spectrometer.

---

27. J. S. Colonias and J. Dorst, Magnet Design Applications of the Magnetostatic Program Called TRIM, UCRL-16382, September 1965.
28. PDSR, UCRL-16863, May 1966, p. 31.

Orbit Studies

Program GOCTV was developed to aid in the design of an extraction system for the 184-inch cyclotron. This program allows the user to interact with the computer on-line and speeds up the design process.

Various orbit programs are being prepared for the calculation of electron orbits and the evaluation of these orbits in terms of transmission efficiency. These programs are used in the study of resolution properties of various spectrometer designs.

Program SYNCH[29] is being revised to perform operations on 7×7 matrices and particle vectors. New SYNCH instructions calculate closed orbits, eigenvalues, and eigenvectors on these matrices. Fitting routines are being expanded and improved. SYNCH is being used considerably in the design studies of the storage ring for the NAL accelerator.

Program CYDE[30] has been converted for the CDC 6600 computer and is presently operational; new capabilities are being added to the program.

Electron Ring Accelerator

In the past six months, effort has been directed to the study of the compression process in the "Compressor II" unit set up at the Livermore site and to the design of possible extraction and acceleration systems for a projected "Compressor III" device. Several computational programs were developed, tested, and placed in production. Related programs also have been written and used in the study of problems that arise in connection with a more extended acceleration system which would occur in a compression unit that employs a static, rather than a pulsed, magnetic field. A portion of the computational work relating to acceleration systems was directed to providing estimates of the radiation losses that an electron ring would experience in traversing a periodic cavity structure that forms a part of an acceleration column.

Special Projects

Work on the development of generalized Runge-Kutta-type integration schemes for ordinary differential equations has progressed to the point where the results are usable.

Programs were prepared to solve some transmission-line problems relating to the work done by the Omnitron Group.

This group has been asked to aid in the design of a polarized ion source for the meson factory at Los Alamos Scientific Laboratory.

D. BIOMEDICAL APPLICATIONS

Dale Basinger, Deanna Harrell, Cheryl Herrin, Ruth Hinkins,
William Hogan, Harvard Holmes, Mark Horovitz, Thomas Mahan,
Esther Schroeder, Marjory Simmons, and Kenneth Wiley

Instrumentation

The PDP-8 program MANGLE was written to monitor nuclear-magnetic-resonance experiments. This program accepts teletyped commands to initialize program parameters,

29. A. A. Garren and J. W. Eusebio, SYNCH - A Computer System for Synchrotron Design and Orbits, UCID-10153, April 10, 1965.
30. Elon R. Close, A Collection of FORTRAN II Cyclotron Development Codes for Use on the IBM 7094, UCID-2869, January 1967.

and initiates and controls the timing of the experiment. It can acquire data at moderately high rates (to 50 μsec/datum) and in large quantities (up to 100 000 channels). The program can perform preliminary data reduction and display, and output the results in a variety of ways.

A PDP-8 program, ISOTOX, has been written to calculate disintegrations per minute of isotope solutions. These are determined from data from a scintillation counter combined with calibration data for the particular isotopes in the particular counters used.

Computer programs are being written to investigate the applications of digitized spark-chamber readout to nuclear medicine. The imaging of gamma-ray-emitting isotopes by spark chambers has the advantages of low cost, providing a large area for whole-body scanning with good depth perception, and allowing measurements to 1 mm accuracy. The computer is used to determine areas of interest, for background subtraction, and to make selective contrast enhancement. Various display programs are used for on-line CRT and camera.[31]

PERSP, CHPLT, and CHTVI are FORTRAN IV programs to process functions of two variables so they can be plotted (or pictured) on a plane in perspective. The programs utilize the CC66 and (or) TV66 library routines to do the actual plotting. Methods are being devised by which a user can change the reference point from which he is observing the surface.

Quantitative Models

A study of human erythron iron kinetics was continued.[32] New versions of programs SBLOOD[33] and FINDR[34] were written to incorporate new features of interest. For example, SBLOOD4 enables the use of actual, rather than calculated, plasma data while solving the pertinent differential equations to simulate iron incorporation. These programs permitted testing of several hypotheses concerning a select group of patients' data.

Work was done on the problem of evaluating a proposed design of a controlled clinical trial. Serious consideration had been given to a restricted segmental procedure; one well-known class of such procedures was investigated numerically.[35] A straightforward method for generating tabled designs was implemented using multiple-word arithmetic routines. These enabled the exact enumeration of paths between the origin and points on the boundaries and the exact computation of probabilities.

Several programs intended to aid the interpretation of experimental NMR spectra were completed and are in use. The basic routine, NMRMAIN, computes a theoretical nuclear-magnetic-resonance spectrum using a specified set of parameters. A Vista CRT console is used for displaying the spectrum and to permit on-line changes of parameter values and display options.

After thorough testing, the former program STEP was discarded and was replaced by a new STEP program for finding local minima; this program is used in research on the structure of chlorophyll.

---

31. For more information, see L. Kaufman, V. Perez-Mendez, and H. Wollenberg, Applications of Digitized Readout Spark Chambers to Clinical Uses, UCID-3184, July 25, 1968.
32. Grove Nooney, Iron Kinetics and Erythron Development, Biophysic. J. 5, 60 (1965).
33. PDSR, UCRL-17282, January 1967, p. 29.
34. Grove C. Nooney, Iron Kinetics and Erythron Development, UCRL-11879 Rev. 1, May 1965.
35. Peter Armitage, Sequential Medical Trials (Blackwell Scientific Publications, Oxford, 1960).

Two programs were written to process genetic data studied by C. Murphy. GENES provides certain summary statistics specified by the user, and provides an $n \times n$ correlation matrix, where n is the number of variables measured on each specimen. The second program, FLYS, reduces this matrix to a form which makes possible a reasonable clustering of the n underlying entries (if such a clustering has a basis in reality). One group of underlying variables, known to be histologically related, were grouped together in this manner; a second cluster showed up which may, in the future, be found to be histologically related.

A paper, Computer Analysis of Breath $^{14}CO_2$ Data by H. S. Winchell and K. Wiley has been submitted to the Journal of Nuclear Medicine.

Radiation Dosimetry

A FORTRAN IV program LSQVM was written to find a function which approximates data representing an FE-59 ESF dose response curve.

PEDRO and DOSIT,[36] tabulators of radiation dose totals for each Laboratory employee, are being modified to provide more complete information.

A program SPRAY has been written to calculate a theoretical beam-intensity profile, given a Bragg curve of ionization versus distance from source, and assuming a Gaussian intensity distribution from each point source in the beam aperture.

Data Processing

Final data-form changes were made for the diabetes mellitus project; corresponding dictionary alterations were written here and updated at Tulane. Some changes to accommodate larger files were made in MEDPIC.[37] Production runs have begun.

MASTER was written to create a uniform processing routine for data collected in a chlorophyll research project.

CORR2 is a program to determine possible statistical correlation of data relating blood-sugar and growth-hormone levels in various groups of people.

A general-purpose data-storage program, STORE, is near completion. This program allows the user to create new forms for data input and output to suit his changing needs.

The medical bookkeeping program, MEDFI, has been updated for current use by the LRL Medical Department.

Miscellaneous Biomedical Computations

PROCESS was written to fit a polynomial curve to data correlating radiation level to the degree of exposure of film and to plot both the data points and the fitted curve. The program also inverts the function and produces a table by solving for given film densities.

A procedure has been developed to handle the input and output of fairly simple programs from a remote teletype connection. The setup is suitable for frequently needed calculations which are too lengthy to be handily done on a desk calculator and which do not have voluminous input or output.

---

36. PDSR, UCRL-17876, November 1967, p. 55.
37. PDSR, UCRL-17876, November 1967, p. 55.

E. MISCELLANEOUS

Robert Belshe, Deanna Harrell, Marjory Simmons, Kenneth Wiley, and Edna Williams

Bevatron Control

A preliminary version of the PDP-8 external-beam magnet control system has been written and tested. Work continues to improve the ability of the operator to interact with the system.

A new library format has been designed which will improve reliability of disc-tape system operations on the PDP-8. The tape sections of the system have been written and debugged.

Job Scheduling

SHUFL is a program currently being written in FORTRAN for the CDC 6600 which will analyze information from the electrical and mechanical shops and engineers. Each supervisor submits a nine-week projection of distribution of man-hours of work required on every job which is either in progress or planned for his group. These will be sorted and collated in various ways to clarify the Laboratory effort picture and enable an equitable scheme of priorities to be assigned.

Printed-Circuit Artwork

PUZZLE, a program to aid in the design of printed-circuit artwork is still expanding. Input procedures are being revamped to use the CRT and light-pen facilities. At the present time, a separate routine is running which receives and interprets data via light pen and teletype. An erase option has been added, but as yet is not debugged. A UCRL report has been published that explains the current production version of PUZZLE.[38]

Magnet Test Data

OMNIBUS has been written to process magnetic-induction measurement data. OMNIBUS takes reduced data (raw data after identification and calibration) from other programs and makes necessary corrections. It also has the ability to normalize and combine data.

II. SYSTEMS PROGRAMMING

Eric Beals, William Benson, Jerry Borges, Douglas Brainard, Mansfield Clinnick, William Dempster, Robert Fink, Richard Friedman, Judith Glasner, Walter Hutchinson, Joyce Johnston, Jeremy Knight, Samuel Penny, David Stevens, and Robert Tracy

6411

The expanded teletype driver has been completed and is now in operation servicing 17 teletypes. Of the two extensions to the remote console facility mentioned in the previous progress report,[39] one (the attachment of several consoles to COMUT) has been completed, and the

38. D. A. Harrell and R. Zane, Computer-Aided Design of Printed-Circuit Artwork, UCRL-18172, April 9, 1968.
39. PDSR, UCRL-18235, May 1968, p. 84.

other (attaching the console utility programs to GENIO) has been abandoned.

Work has been completed on a recovery package for the 6411 which will reduce the amount of time lost in the event of a hardware (or software) failure requiring a dead start. This includes a special dead-start facility, a system dump routine, and an EMPTY/FILL package for saving files on tape.

Accelerator Link

The PPU program has been debugged and is being used during debugging of the PDP-5 system. Small-scale production use is expected to begin soon.

Mass Storage System

The thirty-day performance test for the Chip Store was completed on schedule in July. Some pieces of the mass storage system were redesigned in the light of the experience gained during this test. Initial versions of most of the subroutines have been coded, and debugging has begun.

Program Storage System

This is a modest permanent file capability using the data cell and a disk pack. It is planned as an extension to the present library facility on the disk pack and will provide controlled access to the data cell. The basic design is complete and implementation has begun.

6600

The following features of SCOPE have been provided under BKY:

1. Compass
2. Random access disk I/O
3. The SCOPE UPDATE (called BILGE under BKY)
4. COBOL
5. The SCOPE Loader
6. FORTRAN Extended (prerelease version)
7. SNOBOL 4.

The following features of SCOPE are undergoing modification for inclusion under BKY:

Sort/Merge
FORTRAN Extended (released version)
RUNF (an optimized version of the RUNQ Compiler)

In addition, an optimized version of the (Chippewa) RUN Compiler (called RUND) has been added to the system.

Two attempts to improve throughput are in the final stages of checkout: the first is a set of modifications designed to make effective use of the 6603 disk speed-up modification II, and the second is a new algorithm for the assignment of priorities to a job at a control point. The new algorithm is much more sensitive to short-term changes in the characteristics of a job than is the algorithm presently in use.

Two projects (the FORTRAN Extended Sampler and the tape-drive failure statistics routines) have been interrupted because of the temporary absence of the principal investigators.

The first system tape loader has been completed and is now in use; the expanded version, COMUT,[40] is nearly complete; and the initial version of the fast program loader is in production use.

III. RESEARCH IN MATHEMATICS AND COMPUTER SCIENCE

William Benson, Paul Concus, Harold Hanerfeld, David Jenson, Loren Meissner, Grove Nooney, and Leo Vardas

Computer Typography

The keyboard input device to the expanding computer typography system is now operational. The keyboard provides the operator with a choice of as many as 102 characters in each of eight different styles of type. The system will be used to compile and set up the new edition of Berkeley's Table of Isotopes.[41] Nuclear data, as it is abstracted from the journals, will be punched on cards or magnetic tape for storage. Data analyses will be done periodically and similarly stored. To check accuracy, the compilers will be able to proofread the new input from a CRT picture or from a plotted version made using the SCRIBE[42] program. Eventually, even the line drawings will be done by computer.

Interactive Time Sharing System

Work continues on the PDP-8 time sharing system. A multimachine configuration has been defined, and convenient and flexible hardware interconnections have been specified. Operating system conventions to handle intermachine communications have been specified and the logic partially flow-charted. The system will allow any machine to read and write any other machine's memory, either directly from its memory or via the disc.

General-Purpose Macro Processor

A version of PROMAC is now ready and available for general use. PROMAC is a general-purpose macro processor which can serve as a precompiler for FORTRAN, assembly languages, etc. It provides users with "compile-time" variables and executable statements. It enables programmers to write large, general-purpose routines which can, at precompilation time, be edited using conditional operations. Because it is general-purpose, assemblers do not need to be equipped with special macro handling facilities; a two-pass operation—the first through PROMAC—makes any assembler a macro assembler. PROMAC is to be the target language of a machine-independent FORTRAN compiler for small computers. For each particular machine, it is only necessary to provide those macro definitions which are relevant for that computer.

---

40. PDSR, UCRL-18235, May 1968, pp. 35 and 85.
41. C. M. Lederer, M. M. Hollander, and I. Perlman, Table of Isotopes, Sixth Edition (John Wiley & Sons, Inc., New York, 1967).
42. Loren P. Meissner, J5-BKY-SCRIBE, July 1968 (available in the Computer Center Library).

Nonlinear Block Successive Overrelaxation

Work was completed on a paper[43] describing the results on this subject, which were reported previously.[44] A talk based on the paper was presented to the IFIP Congress 68 in August.

Capillary Fluid Mechanics

A talk was delivered to the APS Los Alamos Meeting in June describing a numerical technique for obtaining the normal modes and corresponding eigenfrequencies of an inviscid liquid partly filling an axisymmetric container, taking surface-tension effects into account.[45] The technique is based on a finite-difference approximation to the governing differential equations, with the solution of the resulting matrix-eigenvalue problem carried out by a modified form of the inverse iteration method.

Work continues on the study of the quasi-linear partial differential equation describing the equilibrium free surface of a liquid partially filling a cylindrical container, where surface tension effects are included. Some basic results in the theory of surfaces with linearly varying mean curvature have been obtained; new closed-form solutions of the equation have been found, and some conditions for existence formulated. Portions of these results were presented in talks presented at the American Mathematics Society 1968 Summer Institute on Global Analysis[46] in July and at the Courant Institute of Mathematical Sciences, NYU, in October.

Etiology of Leukemia

A plausible unified etiological explanation based on stem-cell behavior has been found for the following features in the epidemiology of human leukemia. The rate of incidence of leukemia is less for females than males, but the difference is less pronounced during the childbearing period. The rate drops sharply for each sex between ages four and six years ("childhood peak") and shows an adolescent peak that is relatively greater for males. The rates increase monotonically for both sexes after maturity. Chronic leukemia is rare in leukemic children and common in leukemic adults, but exposure to radiation increases the relative proportion of chronic forms in children.

IV. COMPUTER OPERATIONS

F. Marvin Atchley and Paul A. Rhodes

The IBM photoscopic chip-storage device underwent a 30-day test and was accepted by the Laboratory on July 8, 1968.

---

43. Paul Concus, Numerical Solution of the Minimal Surface Equation by Block Nonlinear Successive Overrelaxation, Proc. Int. Fed. Inf. Proc. Soc. Congress, Edinburgh, Scotland, August 1968.
44. PSDR, UCRL-18235, May 1968, p. 86.
45. P. Concus, G. E. Crane, and H. M. Satterlee, Numerical Calculation of Small-Amplitude Standing Capillary-Gravity Waves in an Axisymmetric Container, Bull. Am. Phys. Soc. 13, 911 (1968).
46. P. Concus and R. Finn, How to Take a Bath in a Spaceship, presented at Am. Math. Soc. 1968 Summer Institute on Global Analysis, University of California, Berkeley, July 1968.

Arrangements were made with Control Data Corporation to supply the Laboratory with a Type 6416 extended input-output processor on a loan basis to replace the 6411. The 6411 will be taken back to the factory for a complete overhaul. It is anticipated that this overhaul will consume about three months.

During the months of August and September, all the CDC 607 tape drives were completely overhauled.

In July, a courier service was inaugurated to a number of buildings at LRL and on Campus. This service provides hourly pick up and delivery of computer input/output materials.

One of the card readers attached to the 6600/6411 has been relocated and made available directly to users.

PUBLICATIONS AND PAPERS

1. David F. Stevens, System Evaluation on the Control Data 6600, UCRL-17893, October 1963; presented at the International Federation for Information Processing Congress, Edinburgh, Scotland, August 5-10, 1968; proceedings to be published.
2. Paul Concus, Static Minisci in a Vertical Right Circular Cylinder, UCRL-18112, February 1968; submitted to J. Fluid Mechanics.
3. Paul Concus, Numerical Solution of the Minimal Surface Equation by Block Nonlinear Successive Over-Relaxation, UCRL-18238, May 1968; presented at the International Federation for Information Processing Congress, Edinburgh, Scotland, August 5-10, 1968; proceedings to be published.
4. R. Bland, G. Goldhaber, B. Hall, and G. Trilling, A Search for A K^* Below $K\pi$ Threshold, UCRL-18206-Rev., May 1968; presented at the Informal Meeting on Experimental Meson Spectroscopy, Philadelphia, April 26-27, 1968; submitted to Phys. Rev. Letters.
5. Jonathan D. Young, Numerical Applications of Hyperbolic Spline Functions, UCRL-18253, May 1968; submitted to the Logistics Rev.
6. R. Bland, G. Goldhaber, B. Hall, J. Kadyk, V. Seeger, G. Trilling, C. Wohl, K^+p Interactions Near 1 BeV/c, UCRL-18323 Abstract, July 1968; presented at the 14th International Conference on High-Energy Physics, Vienna, Austria, August 28-September 5, 1968.
7. R. Zane and D. A. Harrell, Computer-Aided Design of Printed-Circuit Artwork, UCRL-18172, April 9, 1968; chapter in Computer-Oriented Circuit Design, Franklin F. Kuo and Waldo S. Magnuson, Jr., Eds. (Prentice-Hall, Inc., Englewood Cliffs, N. J., 1968).
8. G. M. Litton, J. Lyman, and C. A. Tobias, Penetration of High-Energy Heavy Ions, with the Inclusion of Coulomb, Nuclear, and Other Stochastic Processes, UCRL-17392 Rev., May 1968.
9. J. E. Hearst, E. Beals, and R. A. Harris, Polymer Dynamics. IV. The Zero-Frequency Intrinsic Viscosity of Polymer Molecules with Hydrodynamic Interaction and Excluded Volume, J. Chem. Phys. 48, 5371 (1968).
10. Jonathan D. Young, Generalization of Segmented Spline Fitting of Third Order, UCRL-18346, July 1968; submitted to Mathematics for Computations.
11. Jonathan D. Young, Numerical Applications of Damped Cubic Spline Functions, UCRL-18364, July 1968; submitted to Logistics Rev.

12. Harold Hanerfeld, Bounds for the Roots of Certain Polynomials and Matrices, UCRL-18267, July 1968.
13. H. S. Winchell and K. Wiley, Computer Analysis of Breath $^{14}CO_2$ Data, in Biology and Medicine Semiannual Report, Fall 1968.
14. H. C. Albrecht, E. P. Binnall, R. W. Birge, M. H. Myers, and P. W. Weber, COBWEB: Data Reduction System, UCRL-18528, October 1968; submitted to Proceedings of the International Conference on Advanced Data Processing for Bubble and Spark Chambers, Argonne National Laboratory, October 28-30, 1968.

DATA HANDLING

Howard S. White in charge

Effort of the group was mainly devoted to two activities: the continued use of existing systems to provide measurement of bubble-chamber events in accordance with the needs of physics experiments, and the development of improved procedures and systems for measurements to be made in the future.

Funding was approved during this period for the construction of a tandem FSD, and some effort was directed toward the logical specification of this hardware in association with the Special Projects Group. Work was continued on the software modifications needed to use the tandem when it becomes operational in late 1969.

Development of DAPR (Digital Automatic Pattern Recognition) continued, and this system became nearly complete enough to allow the measurement of a five-roll "practice experiment" in October. In these data, approximately 68% of all four-prong events were measured, identified, and edited for input to geometric reconstruction entirely without manual assistance. Development continues to improve the throughput of measurements, but even now this ratio is higher than was the corresponding ratio for HAZE when its physics use began in August 1963.

Further work was done to improve the procedures for relating the relative ionization and the fractional digitizings obtained in both HAZE and DAPR measurements with the FSD. Extension of these techniques to data for Franckenstein measurements was begun.

Much of the group's effort was expended in making the many small adjustments to procedures which are required to adapt the measurement system in their continued application to slowly evolving experimental data. These are discussed in more detail under the headings for each program system.

COMPUTER PROGRAM DEVELOPMENT

HAZE: Semiautomatic Event Measurement

Priscilla Davis, Wen-Sue Gee, and Loren Shalz

New experiments in the 25-inch and 72-inch hydrogen bubble chambers were started, and the appropriate program constants were determined.

The ability to use road information generated at other laboratories or by other devices within this laboratory has been a long-time feature of the HAZE system. Increased usage of this feature by outside users made it necessary to establish standards for road information supplied in this way.

Improvements to the fiducial finding subroutine in the FSD calibration program 434 were added, and a study of an improved model for relating normal and orthogonal modes was begun. The purpose of this study is to understand and remove the remaining small systematic errors observed with the present model.

The FSD hardware monitoring program 431 was extended to include checking of the track center circuits, and work was started on the design of a more general hardware monitoring program which would allow C-level background calculations to go on simultaneously.

FCF: Geometry, Kinematical Analysis, Data Display

Michael Block, Shirley Buckman, Donna Chrisler, Vivian Morgan, and Frank Windorski

The FCF (FOG, CLOUDY, FAIR) Systems of programs continued to operate in production status. Maintenance programming, associated with setting up new experiments, and changing library formats, continued.

The problem of convergence in the kinematical constraints procedure of CLOUDY continued to be studied. Several approaches were tried, and these yielded promising results in some cases. However, a general solution to the problem has not been found.

TRIST: System Monitor

Priscilla Davis and Carol Osborne

With the completion of debugging of B-level logic, work started on debugging the simultaneous running of A, B, and C levels.

A new assembly of the system was completed to obtain more space, and a great deal of time was spent attempting to trace an unexpected problem with the memory protect and interrupt features. In this connection, several diagnostic routines were written for the memory protect and interrupt subroutines to help isolate the problem.

In addition, two diagnostic programs were written and debugged, to be used in checking out new assemblies of TRIST. The first, program 445, operates as part of the TRIST executive program. This program calls "system-only" subroutines, i.e., subroutines that may be called only by the system program, and checks to see that the subroutine was executed properly. The second, program 446, operates as a C-level program. It performs the same type of tests except that it calls "general-user" subroutines, i.e., subroutines which may be called by any program.

EVENT ACCOUNTING

Shirley Buckman

Most of the effort spent during the last six months on EVENT ACCOUNTING was spent in analyzing the existing program capabilities in terms of operating procedures, validity checking, and use of the various reports as tools for studying scanner's efficiencies.

Routine production procedures were worked out with the operations staff, so that the EVENT ACCOUNTING system has become a smoothly running, extremely useful part of the system. By October, less than 1% of the C-level production operation was spent in Event Accounting, and the oldest backlog was less than 3 weeks behind.

A thorough study of rejection causes in experiment 90 was undertaken. The EVENT ACCOUNTING system made it possible to isolate and correct problems with the FSD, and with individual scanners which had caused a sudden drop in throughput during the month of June.

DAPR: Fully Automatic Event Scanning and Measurement

Barbara Britton, Joan Franz, Wen-Sue Gee, Dennis Hall, Laura Jontulovich, Howard White, and Frank Windorski

An improvement to the fiducial finding routines of the real-time DAPR program 511 was made, which greatly reduced the number of missed fiducials. The inability of the program to

recognize fiducials had previously been the largest cause of frame rejections. Coding was also added so that the program would not do the orthogonal sweeps of a view if the normal sweep failed. Flow-charting of a procedure to allow the program to skip later views of a frame if the first view fails, was completed.

It appeared that all outstanding technical problems relating to the linking and joining phases of DAPR 512 were solved. A new version of the program was written and was in the process of checkout. The new version retains all of the basic procedures which proved successful in the earlier program. However, extensive revisions of the order in which the basic procedures are applied, streamlining of the testing subroutines, and elimination of redundancies, have combined to make the new version about five times faster than the older version.

Five rolls of 72-inch bubble-chamber film (6.0-GeV/c proton exposure) were processed through DAPR, and running procedures were standardized into a smooth operation. A careful analysis of the results of this run was made, and the error causes were classified in order of decreasing frequency. These problems are now being solved one by one so that the DAPR system can expect to achieve results comparable to the HAZE system in the near future.

Approximately 3000 triads of digitally abstracted data were processed through the scanning program 516. The program was observed to scan at a rate of 7600 triads per hour, and is expected to increase to a rate of 10 000 triads per hour with the elimination of the remaining fixed noise on the data-abstract tape.

The major part of the diagnostic display program 518 was debugged, and provided great assistance in analyzing the results of the five-roll runs. Its purpose is to provide, at key points in the DAPR processing chain, CalComp plots of events selected on the basis of specified acts of selection criteria. The program also provides for comparison plots with events measured by the HAZE or COBWEB systems as well as with the actual roads supplied to HAZE by human scanners. Some modifications to the program 515 which formats the CalComp plot tape were required because of these extensions to program 518.

Debugging of the fixed-noise-finding program 519 continued. Fixed noise is produced by nonuseful fiducials, coathangers, and other undesirable track-like objects which are found in bubble chambers. Completion of this program will significantly reduce the amount of tape required for storing a bubble chamber image, and will consequently speed up processing of all B and C level DAPR programs.

The production and quality-control monitoring program 514 of DAPR was operated during the five-roll study, and debugging is nearly complete. The function of this program is to maintain a continuous check on hardware, film, and program status flags, and by summarizing these at timely intervals, to provide assurance that the data abstracted from the film forms a valid representation of the film information.

DATA-PROCESSING OPERATIONS

The following table summarizes the processing of events measured on Franckensteins and the FSD. An event is the entire collection of related vertices measured in a bubble chamber picture. New measurements are counted separately, but the effect of any reprocessing of calculations has been eliminated from the totals.

Event Measurements Analyzed

Experiment	Chamber	Beam	Group	Number of events
Franckenstein measurements				
34	25-inch deuterium	0.9-1.2 GeV/c K^-	Powell-Birge	962
42	72-inch hydrogen	1.5 GeV/c π^+p	Powell-Birge	2 399
43	72-inch hydrogen	1.4 GeV/c π^+p	Powell-Birge	26
44	72-inch hydrogen	1.3 GeV/c π^+p	Powell-Birge	7
45	25-inch hydrogen		Powell-Birge	3 912
46	25-inch hydrogen		Powell-Birge	12 645
47	25-inch hydrogen		Powell-Birge	1 575
49	25-inch hydrogen		Powell-Birge	65
50	25-inch hydrogen		Powell-Birge	6 882
52	25-inch hydrogen		Powell-Birge	12 281
	Total Franckenstein measurements processed			40 788
FSD measurements				
36	72-inch hydrogen	3.3 GeV/c π^+	Powell-Birge	108
36R	72-inch hydrogen	3.3 GeV/c π^+	U.C. Riverside*	16 195
37	72-inch hydrogen	3.7 GeV/c π^+	Powell-Birge	156
38	72-inch hydrogen	3.5 GeV/c π^+	Powell-Birge	2 050
39	72-inch hydrogen	2.9 GeV/c π^+	Powell-Birge	627
42	72-inch hydrogen	1.5 GeV/c π^+	Powell-Birge	6 039
44	72-inch hydrogen	1.3 GeV/c π^+	Powell-Birge	1 044
45	25-inch hydrogen	1.0 GeV/c π^+	Powell-Birge	54 002
46	25-inch hydrogen	1.0 GeV/c π^+	Powell-Birge	482
48	25-inch hydrogen	1.0 GeV/c π^+	Powell-Birge	369
49	25-inch hydrogen	1.2 GeV/c K^-	Powell-Birge	393
50	25-inch hydrogen	1.2 GeV/c K^-	Powell-Birge	57 992
71	72-inch deuterium	6.0 GeV/c p	Segrè-Chamberlain	29 569
72	80-inch deuterium**	8.0 GeV/c p	Segrè-Chamberlain	5 715
90	80-inch hydrogen **	9.0 GeV/c K^+	Trilling-Goldhaber	83 951
91	72-inch hydrogen	3.5 GeV/c π^+	Trilling-Goldhaber	32 714
91' JM'	72-inch hydrogen	3.5 GeV/c π^+	Trilling-Goldhaber***	1 868
		Total FSD measurements completed		293 271
			Total events analyzed	334 059

*In collaboration with Powell-Birge Group.

**Brookhaven National Laboratory.

***As a test, a graduate student associated with this experiment scanned and "roadmade" two rolls of this film. This average rate was approximately 40 events per hour (twice normal scanning averages) and throughput was 93.2% (three times fewer errors than average roadmaking).

PUBLICATIONS AND PAPERS

The following reports are to be published in the Proceedings of an International Conference on Advanced Data Processing for Bubble and Spark Chambers, Argonne, Illinois, October 28 - 30, 1968 (in press).

1. H. S. White, B. Britton, J. Franz, W. -S. Gee, D. Hall, N. Jontulovich, and F. Windorski, DAPR: Digital Pattern Recognition Approaches Production, UCRL-18543, October 1968.
2. Dennis Hall, DAPR: Vertex Search and Track Match, UCRL-18544, October 1968.
3. G. Borreani, D. Hall, L. Shalz, and P. Hanson, Bubble Density Measurements with Haze, UCRL-18545, October 1968.
4. Joan Franz, Automatic Scan, UCRL-18546, October 28, 1968.
5. Carol Osborne, Operations On-Line to a Large Computer, UCRL-18547, October 1968.
6. Loren Shalz, FSD Hardware Monitoring, UCRL-18548, October 28, 1968.

Accelerator Operation and Development

ACCELERATOR STUDY GROUP

Edward J. Lofgren in charge

STUDY GROUP ACTIVITIES

The LRL 200-GeV Design Study Group continues to play an active part in providing design and development support to the National Accelerator Laboratory (NAL) project at Weston, Illinois.

The activities at LRL describe the LRL-NAL joint program.

Booster Synchrotron

Studies on two types of vacuum chambers have been completed and reports prepared. It was concluded that thin metal chambers, such as convoluted bellows, offer a far less costly solution than do ceramic chambers.

The extraction-septum magnet design has been modified to fit the new set of booster parameters recently adopted by NAL. No additional work is anticipated.

Radio-Frequency Systems

Quentin Kerns and certain key people in this group transferred their activities to Weston, Illinois on or about the first of July. Much of this report period was spent in packing hardware for shipment to NAL, and in ordering equipment to replace LRL property. Actual shipment of hardware took place during the month of August.

The ferrite-core transformers to be used on the prototype current power supply are completed and have been shipped to Weston.

CIRAN B, a computer program for linear circuit analysis written in a format-free language, and CIRCUS, a transient analysis program, have been completed. These programs are intended to help predict the behavior of the rf cavity, transmission line, and rf amplifier under the excitation by the beam current through the accelerating cavity.

Magnet Design

LINDA is working for NAL via the data link to New York. LINDA is now also working on the Argonne IBM 360. Magnet calculations are still being run on the LRL CDC 6600.

The magnetic field of the 6-ft model of the 200-GeV gradient magnet has been measured. With a 1/4-in. grid, the computed field gradient agrees with the measured value to within 1%.

Most of the computer runs have been devoted to the NAL booster magnets. Specific details studies include holes in iron, mesh-size effects, zooming, and self-terminating of LINDA computer runs.

Superconductivity

A large NbTi superconducting end-corrected solenoid in its horizontal warm-bore cryostat has been in use in a physics experiment at the 184-inch cyclotron since July. The magnet

has a warm bore of 4-1/4 in. diam, is 36-1/2 in. long, and has a maximum axial magnetic field of 55 kG; the parameters correspond to those of high-energy transport magnets. The solenoid has been kept continuously in the superconducting state for over four months and has been available upon demand. Operating experience is being obtained, and detailed records are being kept on liquid-helium consumption.

Bending magnets (dipoles) using rectangular superconductor have been fabricated after a series of mechanical models using copper conductor were made to demonstrate the method. Figure 1 shows a mechanical model with eight layers of copper conductor in place. The individual layers are wound as flat racetrack-shaped pancakes, the pancakes are then formed over a circular (or elliptical) die, and the layers are then assembled. The superconductor is stiffer than the pure copper, so some additional techniques had to be developed in going from the model to the actual magnets. A superconducting 2-layer, semicircular section of a dipole was fabricated and tested. We reached 100 A at a field of 10 kG with no observable flux jumps; the current was limited by the available power supply. A complete dipole with four 4-in. -diam, 15-in. -long layers has been completed and is being tested. A current of 100 A in this magnet will yield a bending field of 20 kG. Superconductor is on order for the construction of an 8-layer, 5-in. -diam, 3-ft-long dipole with an expected bending field of greater than 30 kG.

Alternating-current losses in superconductors have been measured in coils wound with single and multicore NbTi superconductor. Our measured losses support the currently accepted theories. A most important result is that adiabatic stabilization has been demonstrated in superconductor with filament dimension of 0.0013 in. diam. This adiabatic, or intrinsic, stabilization manifests itself by the absence of flux jumps. Low-loss conductor, of predictable performance, can lead to practical superconducting accelerator magnets and inexpensively fabricated beam transport magnets.

A random winding technique for making dipoles of small-diameter (0.030 in. or smaller) superconductor has been demonstrated with 1-ft-long mechanical models wound with copper wire and bonded with epoxy. Such coils have been made both at LRL and at a commercial fabricator. Suitable uniformity and packing factor have been achieved. In order for such a system to work, with the relatively poor heat transfer in the epoxy matrix, low-loss intrinsically stable superconductor must be used.

A 40-W 4.2°K refrigerator has been tested and is being installed in the superconductivity laboratory for use in cryogenic systems studies. As part of the acceptance tests, liquid helium was created simultaneously in two cryostats, each with its own controllable J-T valve.

Electron Ring Accelerator Group

The design objectives for the first experiments on the electron-ring project were to form high-current rings of small dimensions and to load them with ions. The ring-forming apparatus, which had the dual function of accelerating the electrons transversely and of shrinking the dimensions, is referred to as a compressor. An early version of the device, Compressor I, was assembled quickly to gain experience with low-current rings (10^8 to 10^9 electrons per ring) and to aid in the design of diagnostic equipment. It was a precursor to the more sophisticated Compressor II equipment to be used at Astron to form high-current rings (10^{12} to 10^{13} electrons per ring).

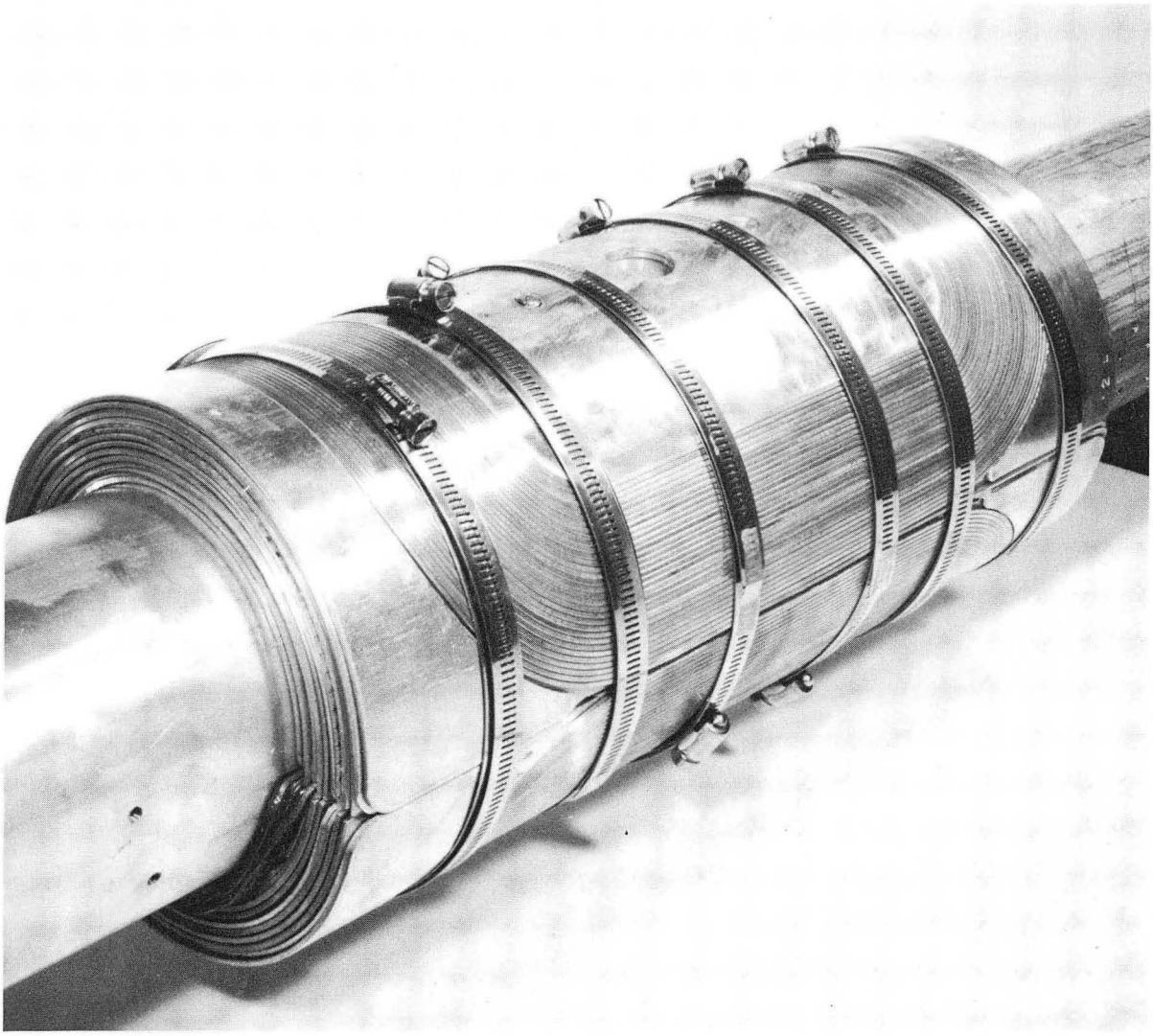

CBB687-4386

Fig. 1. Mechanical model of bending magnet using rectangular superconductor.

During the early months, work on Compressor I and Compressor II was done in parallel. While hardware for Compressor I was being put together, Compressor II was being designed. Then while experiments were being carried out on Compressor I, hardware for Compressor II was assembled.

Compressor I experiments were initiated in early June and terminated in mid-August. Compressor I was a bell-jar vacuum chamber with two-stage magnetic compression experiment (see Fig. 2).[1] The injector was the 4-MeV 100-mA beam of the Berkeley linac which allowed experiments only at low beam current.

1. Symposium on Electron Ring Accelerators, UCRL-18103, February 1968, page 100.

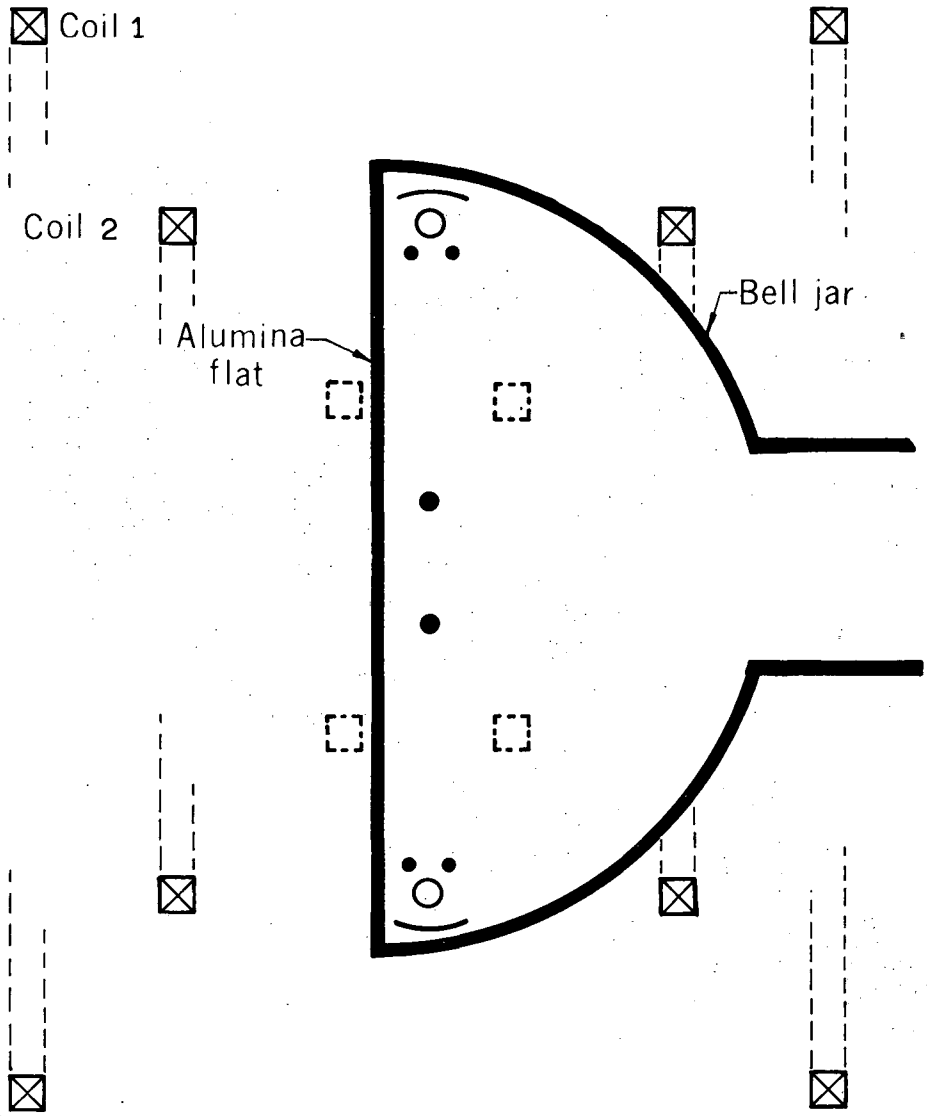

XBL682-4483A

Fig. 2. Two-stage magnetic compressor.

An electromagnetic chopper and trim-coil system selected a 20-nsec electron burst from the 4-μsec linac pulse. The electrons were injected into the compressor when the magnetic field was 750 G and while a set of inflector coils (with a 20-nsec current decay) temporarily depressed the strength of the confining field. The decrease in radius of the ring with time was measured with a movable scintillator, whose signals correlated with those observed on an x-ray detector. The results agreed with the compression calculations. If two sets of coils were used, the ring was contained for several msec, with loss observed as the coil currents decayed.

The minor radius of the rings was determined to be roughly several millimeters (part way through compression), as measured by an axial beam clipper and by observing the duration of x-ray pulses generated when the rings were compressed onto an obstructing probe. Trapping efficiency was only approximately determined, and found to be from 1 to 10%. An experiment with an axially movable obstacle indicated some axial spreading of the beam. No evidence of enhanced radiation at the cyclotron frequency or instability-induced losses was observed.

The primary benefit of Compressor I was the experience gained in design, fabrication, diagnostics, and operation, which was subsequently employed in the development of Compressor II.

Compressor-II experiments using the 3.3-MeV, 300-A Astron injector in Livermore were carried out in two three-week periods (September 3 through 20 and October 4 through November 1). The purpose of the first three-week run was to activate as much of the new equipment and diagnostic probes as possible in order to discover design flaws that could be rectified during the shutdown between runs.

Figure 3 shows the injector, beam-transport system, and compressor. As with Compressor I, a chopper and trim-coil system was used to select a 20-nsec electron pulse (in this case from the 250-nsec Astron pulse). Unlike the slow 1 pulse/min repetition rate of Compressor I, the rate of Compressor II was 24 pulses/min, which allowed tuning using the many available knobs.

The first week was spent putting the vacuum chamber together and installing probes. The second week was spent making mechanical and electrical connections and tuning the 18 solenoids and 20 trim magnets in the entire transport system of the Astron injector and the ERA beam line. Calculations of expected beam envelopes based on previous measurements of the beam emittance were an essential guide in this procedure. An emittance-measuring device in the ERA beam line allowed direct tuning for maximum beam brightness. Typical beam currents (read on pickup toroids) were 240 to 270 A at the exit of the electron accelerator, 200 A downstream at the emittance device after passing defining apertures, and 200 A 13 feet futher, in the ERA experiment cave. A toroid downstream of the compressor (see Fig. 3) measured the beam passing through the entrance snout with the magnetic field off, which was typically 50 A during the first run. By using a single thinner foil (0.01-mil thick) for vacuum isolation during the second run, about 120 A were obtained.

Figure 4 shows a cross-section view of Compressor II. The diagnostic probes included a set of shielded Faraday cups about 330 deg from the injected trajectory to intercept beam that is injected with too large a radius to be trapped. There was also a nude Faraday cup that could be positioned along a radius to intercept 1-turn beam at large radii and trapped beam at smaller radii.

A shielded photomultiplier with plastic scintillator was used to detect x rays produced by electrons in the ring striking chamber walls or a target probe whose position could be varied independently in radial, axial, and azimuthal directions. A heterodyne microwave receiver was used to monitor the synchrotron radiation from the ring at a frequency of 22 GHz (40 MHz bandwidth). This detector was useful in monitoring ring current as a function of time. However, a better quantitative measure of current was obtained with three sets of magnetic pickup

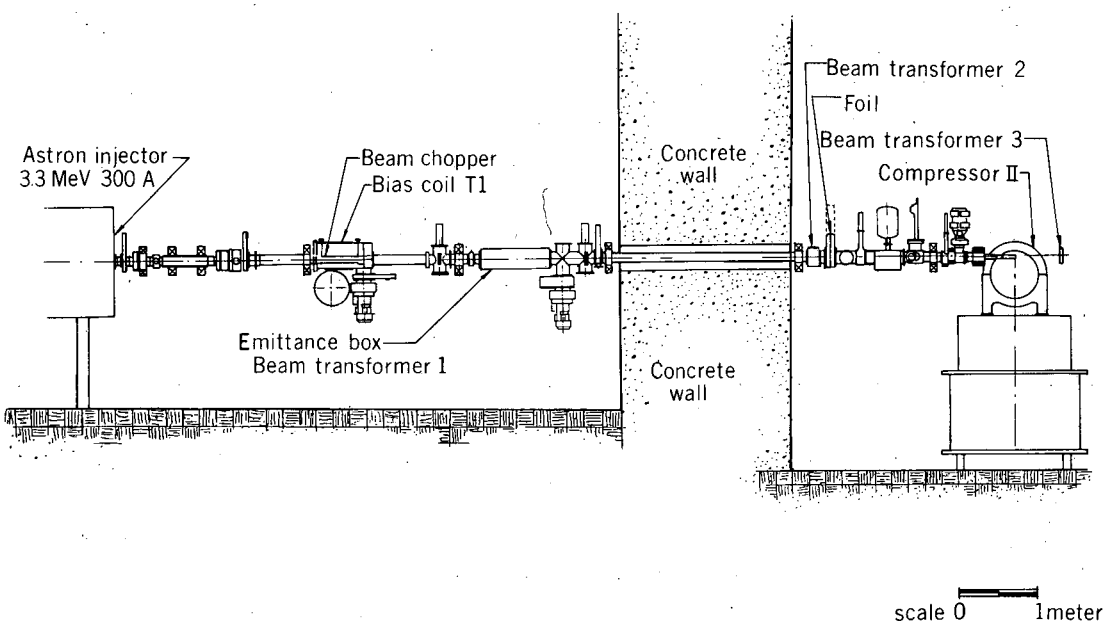

XBL6811-4936

Fig. 3. Experimental arrangement showing Astron injector, beam line, and Compressor II.

loops, although each only worked over a limited region of the compression range. A one-turn loop was used to detect high-frequency cyclotron radiation.

During the first run the inflection process appeared to work satisfactorily. However, the trapped beam was lost in the first 15 μsec, that is, before it should have compressed through a slot in the inflector electrodes. The loss of beam was observable on several of the diagnostic devices—B loops, a microwave detector, and an x-ray detector. The character of this signal did not change significantly when the input beam was reduced by large factors and their magnitude varied linearly with current. This suggested that the beam loss was not due to high-current instabilities, but is, rather, a single-particle effect.

The first run ended with no apparent explanation for the loss. Asymmetry of the median plane was suspected as a reason for this early beam loss. Careful measurements of median-plane symmetry were made during the shutdown between runs and showed that errors were undetectable (less than 1 mm). In an attempt to eliminate other possible culprits, the inflector structure was rebuilt to keep the metal bars as far as possible from the beam, possible transverse deflecting modes in the inflector structure were damped by adding resistors, and possible cavity modes in the compressor itself were eliminated by changing the surface resistivity.

Within a few days after the second run started, 150 A of circulating current was trapped but lost shortly thereafter. Compressor II was designed for injection onto a closed orbit of 19 cm at an n value of 0.52. As the orbit contracts, n decreases rapidly through n = 0.5 and later through n = 0.25 under the influence of the first set of coils. Injection with the 19-cm

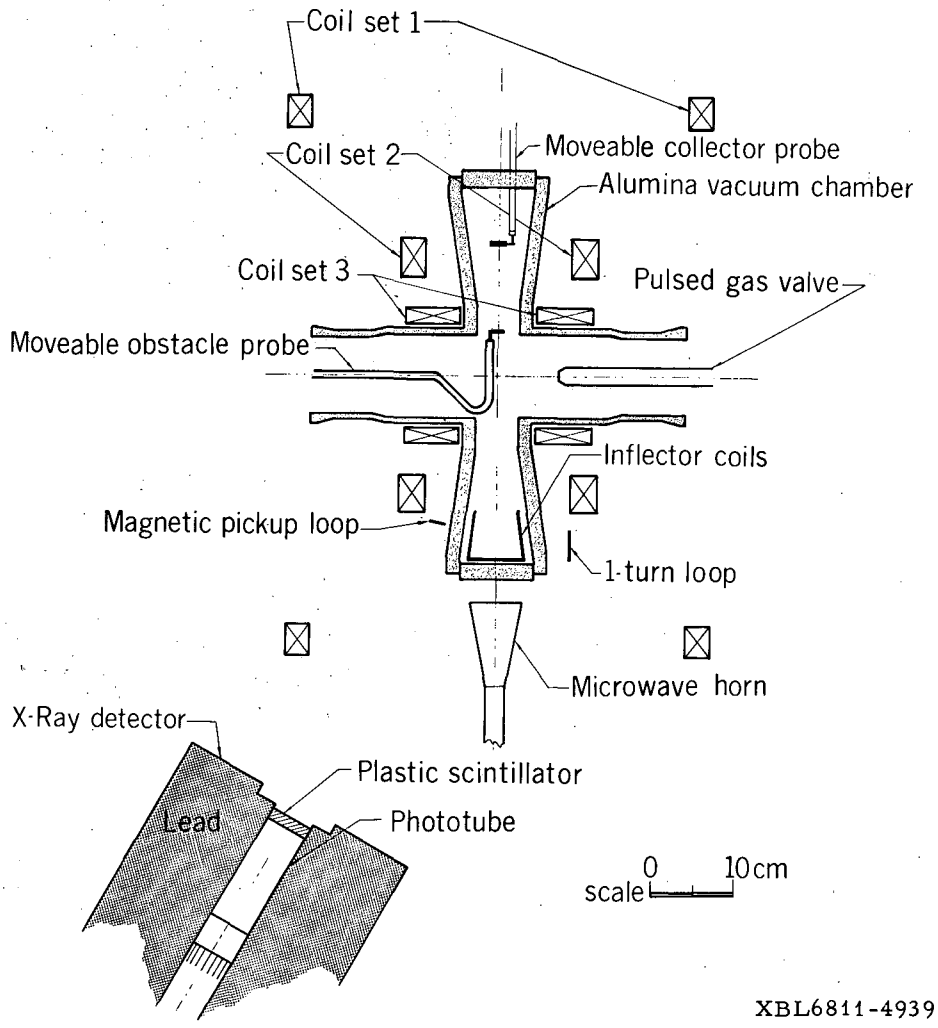

Fig. 4. Cross-section view of Compressor II showing some of the diagnostic probes.

closed-orbit radius caused a rapid (~5 μsec) loss of the beam. Injection with a smaller closed orbit allowed containment for about 40 μsec, at which time a rapid dump occurred (see Fig. 5a). The microwave signal drops when the electrons are lost and the x-ray signal shows a burst when the electrons hit the walls. There was no evidence of cyclotron radiation when the dump occurred. Also the same behavior occurred for a pencil beam which is down by a factor of 100 in current. These facts indicated that a single-particle effect was responsible for the loss.

We began to suspect that betatron resonances were responsible for the beam dumps, and in particular that a coupling resonance at $n = 0.5$ or a variety of resonances just below ($n \approx 0.44$) caused the 5-μsec dump with the 19-cm closed-orbit radius, while a strong half-integral axial resonance $\nu_z = 1/2$ at $n = 0.25$ caused the 40-μsec dump. At injection, beam amplitudes were largest and nonlinearities most potent, and beam injected at the design conditions was very rapidly lost. Beam could be trapped if the closed orbit was much smaller

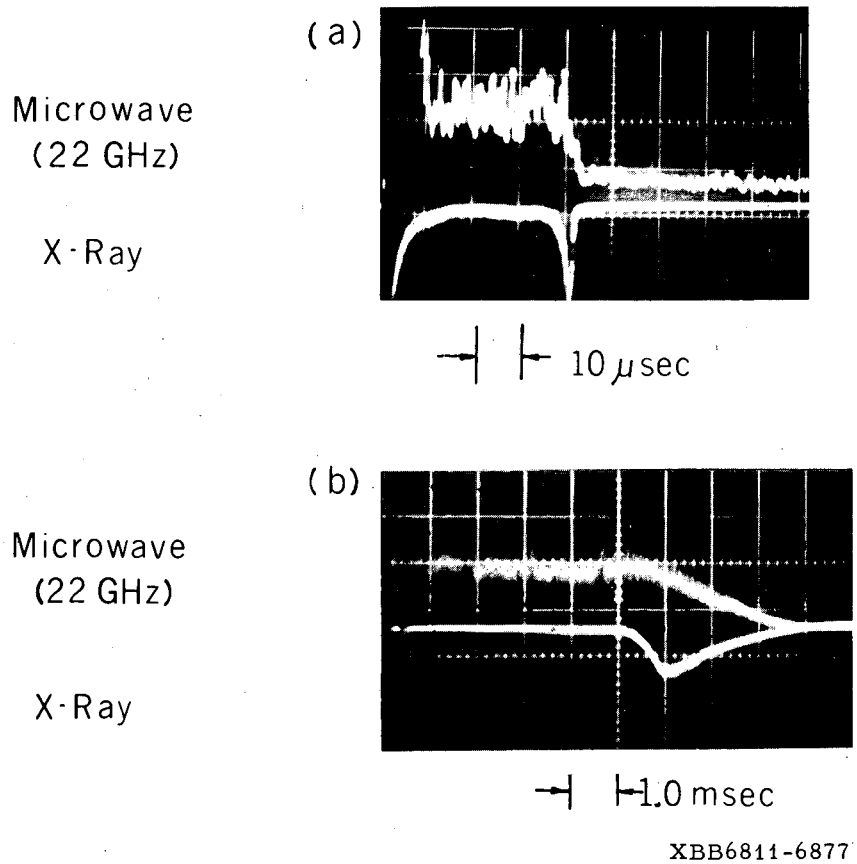

Fig. 5. Heterodyne microwave receiver and x-ray signals showing (a) containment with fast dump at 40 μsec, and (b) 5.5-msec containment with loss as the field decays.

than R = 19 cm, corresponding to an n value substantially below 0.5. One explanation might be that the coupling resonance switches the large radial amplitudes to large axial excursions driving the $\nu_z = 2/3$ axial resonances lying just below in n value. The loss of the trapped large-amplitude beam about 40 μsec after injection was attributed to crossing the n = 0.25 point. By restricting the current excursion in coil set 1 and thus stopping short of the n = 0.25 point, the large amplitude beam could be contained for milliseconds.

Most of the second week was devoted to elucidating the single-particle behavior with the aid of a 2 to 3 A pencil beam, and the general conclusions noted above were reinforced. Namely, at injection it was desirable to stay away from n = 0.5 and, at least during the excitation of coil 1, to avoid crossing n = 0.25.

Towards the end of the second week, circuitry was devised for a current-correction program in coil 2 that would modify the n value at injection and later. This was installed at the end of the week. The first route explored was to stay below n = 0.5 at injection and remain above n = 0.25 during the cycle of coil 1. This creates some difficulties with radial multiturn injection.

Early in the third, and last, week of running a more desirable operating trajectory was discovered. This involved using a current program that kept n = 0.58 more or less constant for some tens of microseconds after injection (whereupon the n = 0.5 coupling point could be crossed with impunity) and later kept the n value above 0.25 until the second set of coils was fired. The action of coil set 2 is to raise the n value through n = 0.5 and down again, and no difficulties were noticed in crossing this n-value several times.

Once a suitable n trajectory had been achieved at low beam, the change to high-beam conditions proceeded rather smoothly. Further corrections were needed to counteract the space-charge effects, but these were slight. One surprising feature was that somewhat higher currents and considerably more stable operation was achieved by turning off the inflector, presumably because of image effects.

Activating coil set 3 resulted in compressing the ring to a final radius of about 3.5 cm, with a circulating current in excess of 800 A. Figure 5b shows microwave and x-ray pulses for this case. The survival time of the ring is very long (5 to 6 msec) and beam blow-up at that time occurs when the ring expands during the gradual decay of the magnetic field and slowly encounters a resonance. Flattopping coil set 3 for 3 msec extended the survival time by 3 msec.

The most striking diagnostic technique that we used, was the observation of synchrotron light from the ring. By progressing from low to high current in the final compressing coil, one could observe the onset of dull red light, to bright red light, to white light. A gated image-intensifier camera was used to take "snapshots" with an exposure time of 500 nsec, integrating over approximately 700 revolutions (see Fig. 6). These gave a measure of dimensions of the cross section of the ring. The radial polarization of the synchrotron light was clearly observed.

Addition of a large pulse of H_2 gas (enough to completely neutralize the ring) at the peak of compression caused the ring to be lost sooner than the 5.5 msec of Fig. 5b. It is believed that this is due to a $\Delta\nu$ shift caused by the focusing effect of the positive ions. By lowering the injected density, the 5.5-msec containment time was recovered, in agreement with calculations.

Radiation at the cyclotron frequency was observed with a 1-turn loop. Among other things this was useful for measuring the beam radius. With the 2- to 3-A pencil beam, the signal was small and uniform, decaying with a 10-μsec e-folding time. At the highest beam currents, the amplitude of the radiation was larger, and it would occur in bursts (1 large burst in the first few μsec followed by several later bursts occurring out to 100 μsec). The later bursts caused some slight beam loss, as indicated by small, correlated x-ray bursts. The momentum of the injected beam was measured, and preliminary analysis of the data indicates about a 0.5% momentum spread. We suspect that the cyclotron radiation is indicative of a negative mass instability caused by the small momentum spread of the injected beam. The instability does not appear to limit the trapped current in present experiments. Use of a spectrum analyzer showed that higher harmonics of the cyclotron frequency are present, and the microwave receiver indicated that they extend out to the 100th harmonic.

To summarize the results, rings with trapped currents typically 120 to 150 A (at injection) were formed regularly. After compression from R = 19 cm to R = 3.5 cm the current rises to more than 800 A. The number of trapped electrons was about 4×10^{12}. High-current,

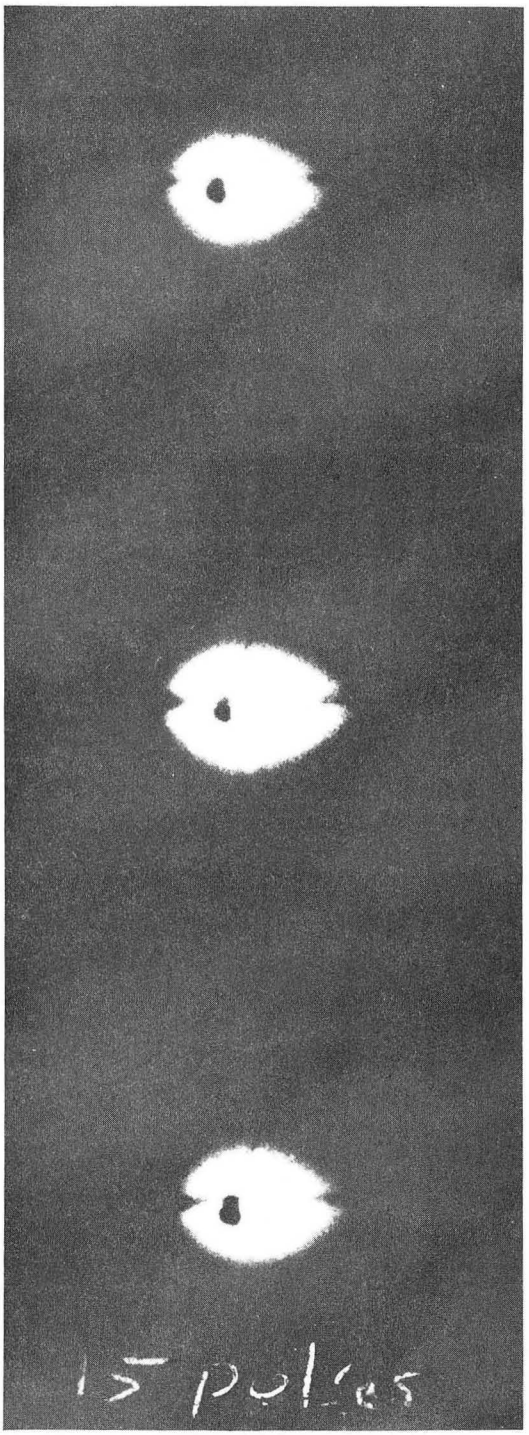

Fig. 6. Synchrotron light taken with image converter camera (15 exposures superimposed). Images are 3.5 × real size. The black dot and line are caused by the camera.

XBB6811-6842

stable injection conditions were observed with the inflector pulse turned off. The synchrotron-light pictures show minor dimensions approximately ± 3 mm radially and ± 2 mm axially. The lifetime of the rings is very long, ≈ 5.5 msec, and is determined by the decay time of the magnetic field. The kinetic energy of the electrons after compression was 18.5 MeV.

Magnetic-field acceleration of the ring has been considered theoretically and some design work has been done for an expansion column to be used in the next experiment.

PUBLICATIONS AND PAPERS

1. R. W. Allison, Jr., J. W. Beal, W. L. Everette, J. R. Guggemos, W. A. S. Lamb, R. M. Richter, W. A. Sherwood, R. L. Spoerlein, J. Tanabe, and E. Zajec, Measurement and Optimization of the Emittance of a 300-nsec, 250-ampere, 3.4-MeV Electron Beam, UCRL-18522 Abstract, October 1968.
2. R. W. Allison, Jr., R. T. Avery, W. R. Baker, W. W. Chupp, E. C. Hartwig, H. P. Hernandez, D. Keefe, G. R. Lambertson, L. J. Laslett, A. U. Luccio, W. A. Perkins, J. M. Peterson, W. W. Salsig, A. M. Sessler, and F. Voelker, The Electron-Ring Accelerator Program at LRL, UCRL-18498, October 1968.
3. R. Avery and G. Tidrick, Structural Analysis of an Elliptical Chamber with a Uniform Pressure Loading, UCID-3215, September 1968.
4. W. Gilbert, Measured Losses in Pulsed Superconducting Magnets, UCRL-18590 Abstract, November 1968; submitted to 1969 Particle Accelerator Conference, Washington, D. C., March 5-7, 1969.
5. M. A. Green, G. P. Coombs, and J. Perry, An Examination of a Liquid Helium Refrigeration System for Superconducting Magnets in the 200 BeV Experimental Area, UCRL-18188, July 1968.
6. M. A. Green, Economic Factors Involved in the Design of a Proton Synchrotron or Storage Ring with a Superconducting Guide Field, UCRL-18186, July 1968.
7. D. Keefe, The Electron-Ring Accelerator, UCRL-18604 Abstract, November 1968; to be presented at 1969 Particle Accelerator Conference, Washington, D. C., March 5-8, 1969.
8. Q. Kerns, Ferrite Loop Test Data, UCID-10197X, August 1968.
9. R. B. Meuser, Magnetic Shields for Superconducting Bending and Quadrupole Magnets, UCRL-18318, June 1968.
10. R. B. Meuser, Superconducting Magnets for the 200-GeV Accelerator Experimental Areas, UCRL-18382, July 1968.
11. G. Tidrick, Thermal Analysis of a Sprayed Ceramic Vacuum Chamber with a Thin Metal Liner in an Oscillatory Magnetic Field, UCID-3216, September 1968.

BEVATRON

Edward J. Lofgren in charge

OPERATIONS

During the period covered by this report, the new two-channel external-proton-beam (EPB) facility was completed and all four target areas brought into operation. There are seven secondary-particle beam channels originating at these four target areas. From Channel I at the second focus there is a 0.5 GeV/c separated secondary-particle beam. At the third focus, there is one separated charged-particle beam (1.5 GeV/c) and two neutral particle beams. In Channel II, at the second focus, there is a 3.5-GeV/c separated charged-particle beam that is used by the 25-in. hydrogen bubble chamber. At the third focus, there is a 1.5-GeV/c separated charged-particle beam and a 2.0-GeV/c nonseparated charged-particle beam.

There are still two internal-beam target areas in active use at the Bevatron. One is near the exit of Quadrant II. Secondary beams from this target area emerge from the Bevatron in the west straight section and service the west experimental area. The second internal-target area is near the exit of Quadrant III. Secondary beams emerge from the Bevatron in the north straight section and service the north experimental area.

Between last May and this October, we have provided beam for a total of sixteen primary experiments and nine secondary experiments. At the end of this period, we were set up and operating for eight primary experiments in separate secondary-beam channels plus four experiments on an alternating basis using the 25-in. bubble chamber. In addition we provided beam for four secondary experiments, some of which were counter and equipment checks for future scheduled primary experiments. During this report period, we had a capability of running as many as 13 experiments simultaneously and compatible, but not all of the experiments were operational all of the time. We did operate 11 experiments simultaneously.

Of the nine primary experiments presently operating, two are using secondary beams from an internal target. The remaining seven primary experiments are set up in the new EPB facility.

Five primary experiments were completed during the period covered by this report. Three of these experiments used secondary beams from internal targets; the other two experiments were done in the new dual-channel EPB facility.

The rotor poles of the Bevatron main generators were replaced in 1967 when cracks were discovered in the dovetail sections. It was determined, subsequent to this discovery, that the cracks formed because of cyclic stress loads imposed on the rotor due to large speed excursions during flattopping. When the generators were placed back in service, the flattop pulse length was limited to 800 msec at 6000 A instead of the previous value of 1000 msec. This 20% reduction in flattop length, and thus a like reduction in rotor speed change during flattopping was expected to result in indefinite life for the poles. Cracks again began to appear in the first laminations of three rotors within a few months after operation resumed. Further reduction in flattop length to 500 msec and the introduction of stress relief holes at the ends of the cracks have completely arrested the formation and growth of cracks. The reduction in flattop length, however, was considered to be a serious limitation on the operation of the Bevatron. The short flattop, and thus the shortened beam pulse reduced the operational flexibility

of the Bevatron and reduced the data-taking rate for counter and spark-chamber experiments. To overcome this problem, a new mode of flattop pulsing was developed and has been operational since July. This mode substantially reduces the speed change of the generator rotors during flattop pulsing and allows flattop lengths of 1 sec at normal operation energy and 2 sec or more at somewhat lower energies. In the original pulse scheme, at the time of flattop, the ignitrons of one generator were inverted while the other remained in rectification. The roles of the two generators were reversed each pulse to even out speed variations.

The new system involves inverting half of the ignitrons on each generator during each pulse. This redistributes the load equally between the motor-generators and also reduces the power supplied by the generators during flattop by about 80%. The speed change is reduced by about 40%. The flattop length was thus restored to 1 sec at 5.3 GeV and 10 pulses per minute (ppm). At 3.3 GeV we have run with a 2.5 second flattop and a long spill of 1.8 sec at 11 ppm. With this new mode of flattop pulsing, the ignitron fault rate in the Bevatron magnet power supply was somewhat higher than it had been formerly. The power supply voltage therefore was reduced from Tap 3 (16 kV) to Tap 5 (14 kV) operation. This reduced the ignitron fault rate. The length of the magnet pulse was retained by shortening the off time between pulses.

There were two scheduled shutdowns during the period covered by this report. The first shutdown was from May 5 to 20. The major job during this two-week shutdown was magnetic-field measurements in the Bevatron main ring magnet. One set of field measurements was a sector-to-sector field comparison through Quadrant III and part of Quadrant II. The purpose of these measurements was to look for a nonuniformity in the magnetic field that could account for a measured perturbation of the closed orbit. The orbit perturbation is of particular importance in the resonant extraction study. A second set of magnetic-field measurements in the Bevatron was a detailed field plot at the exit of Quadrant III. The measurements started in the Bevatron aperture and extended out through the fringe field along the trajectories of the secondary particles. The second scheduled shutdown was on September 3 and 4 for routine inspection of the main motor-generator sets, maintenance, and equipment modifications.

PUBLICATIONS AND PAPERS

1. K. C. Crebbin and R. Frias, Bevatron Operation and Development No. 58, April through June 1968, UCRL-18482, January 1969.
2. K. H. Lou, J. M. Hauptman, and J. E. Walter, High-Quality Narrow Quadrupole Magnets, UCRL-18558 Abstract, October 1968.
3. K. C. Crebbin and F. H. Lothrop, Stimulation and Measurement of Radial Betatron Oscillations in the Bevatron Using the rf Accelerating System, UCRL-18561 Abstract, October 1968.
4. T. Elioff, R. J. Force, W. D. Hartsough, and K. H. Lou, Bevatron External Proton Beam Facilities, UCRL-18598 Abstract, November 1968; submitted to 1969 Particle Accelerator Conference, Washington, D. C., March 5-7, 1969.

184-INCH CYCLOTRON

James T. Vale in charge

OPERATION

The 184-inch cyclotron was in operation 94.2% of the time that the crew was on duty during this period. The principal outage was necessary for the installation of a new thin aluminum window on the main vacuum tank for the extraction of pions from the internal target. This larger window permits extraction of pions of different energies than could be obtained before.

Because this window is located in the most radioactive area of the cyclotron outside the vacuum tank, a cooling down period was necessary to eliminate the short-lived activities. As usual with an operation of this type, everything has to be carefully planned with the people doing the work and with the Health Physics Department to keep radiation exposure to a minimum and safe value.

During this period three major experiments were set up in the experimental areas:

1. nn triple scattering in the external proton cave (Lofgren-Kerth)
2. πHe^3 interactions in the meson cave (Moyer-Perez-Mendez)
3. Neutron-counter calibration for the experiment concluded in the meson cave ($\pi^- p \rightarrow n\gamma$) (Haddock-Nefkens, UCLA).

Major experiments concluded were:

1. μ^- nuclear-capture gammas (Moyer-Kaplan)
2. Mesic x rays (Segrè)
3. π^- biophysical effects (Richman-Raju, Southwest Center for Advanced Studies, Dallas, Texas)
4. $\pi^- p \rightarrow n\gamma$ (Haddock-Nefkens, UCLA)
5. π^+ vs π^- lifetime (Moyer-Kenney).

BEAM STUDIES

Beam studies applying to the main acceleration cycle and to the second dee electrode for duty-cycle improvement have continued. An improvement in the rf beam structure by about a factor of two has resulted.

ARC FILAMENT LIFE

A program is under way to study arc filament life. To do this in the cyclotron itself is impractical, as it would consume too much machine time, so a full size arc is being installed in the magnet that was used for model beam studies some time ago. A minimum of new equipment will be necessary, because spare electronic components and mechanical parts will be used as much as possible.

MODEL OF RADIO-FREQUENCY SYSTEM FOR IMPROVEMENT OF 184-INCH CYCLOTRON

Leal Kanstein

The radiofrequency model studies for the improvement program have continued, and essentially all major problems have been solved. The major mechanical engineering problems, of course, have not been studied because of lack of funds. The deuteron frequency range has been incorporated and a model oscillator constructed.

The full-scale design criteria are:

(1) an rf-swept frequency of 36 to 19 MHz for protons

(2) an rf-swept frequency of 18 to 13.5 MHz for deuterons and alpha particles

(3) an FM system capable of producing beam pulses at 300 Hz

(4) 40-kV dee voltage

(5) lowest rf drive power.

Twin rotary capacitors are used. Their axes are horizontal and in line with a short transition section that connects to the dee (see Fig. 1). The rotors are 2.5 ft in diameter on the model, and have ten sets of three teeth around the periphery. The stator has ten sets of four teeth spaced 1/8 in. from the rotor teeth.

The rotor is coupled to the transition section through a rotating capacitor 20 in. in diameter with a 0.005-in. gap. The transition section converts the rectangular cross section of the dee to a round cross section for the rotor and provides current "streamlining" with appropriate impedance for lowest rotor-to-stator voltage.

The dee is split along the radial line of symmetry to simplify installation and to eliminate cross modes (see Fig. 2).

The frequency of the system is lowered for the deuteron range by adding inductance to the liner with a folded section near the stator blades. The folded section is shorted with a switch around the periphery of the rotary capacitor for the proton frequency range.

The oscillator uses a 3CW30000 tube which is a good model of a 250 kW tube that is suitable for full-scale use. The tube is connected in grounded-grid configuration, with plate and filament transmission lines connected to loops in the transition sections. The lines are between $\lambda/4$ and $3\lambda/4$ long. Radiofrequency traps are necessary to prevent the $3\lambda/4$ mode from being excited when the oscillator is operating at half that frequency. Voltage at the $3\lambda/4$ frequency reduces the oscillator efficiency resulting in a dip in the dee voltage.

Filament power is fed through conductors inside the filament loop and line; so no filament chokes are necessary.

The model has operated through the proton and deuteron frequency ranges with almost constant dee voltage (see Fig. 3). The dee voltage is limited to about 3 kV by the breakdown voltage of the rotary capacitors which are operating in air. The plate efficiency is about 60% throughout the frequency range, and the dc power required for full scale, with 40 kV on the dee lip, is about 400 kW. Maximum rotor-to-stator voltage is 1.4 times the dee voltage.

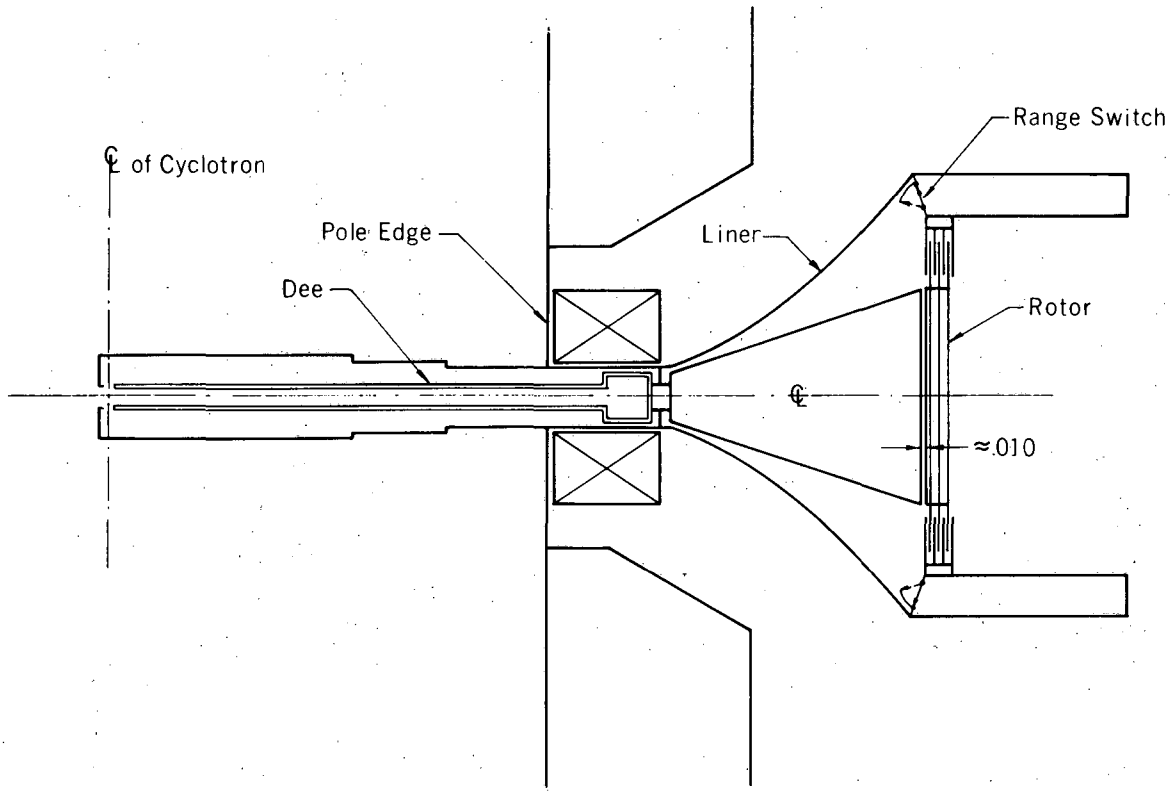

XBL6812-4941

Fig. 1. Side section of the oscillator, showing the horizontal rotor axis in line with the transition section that connects to the dee stem.

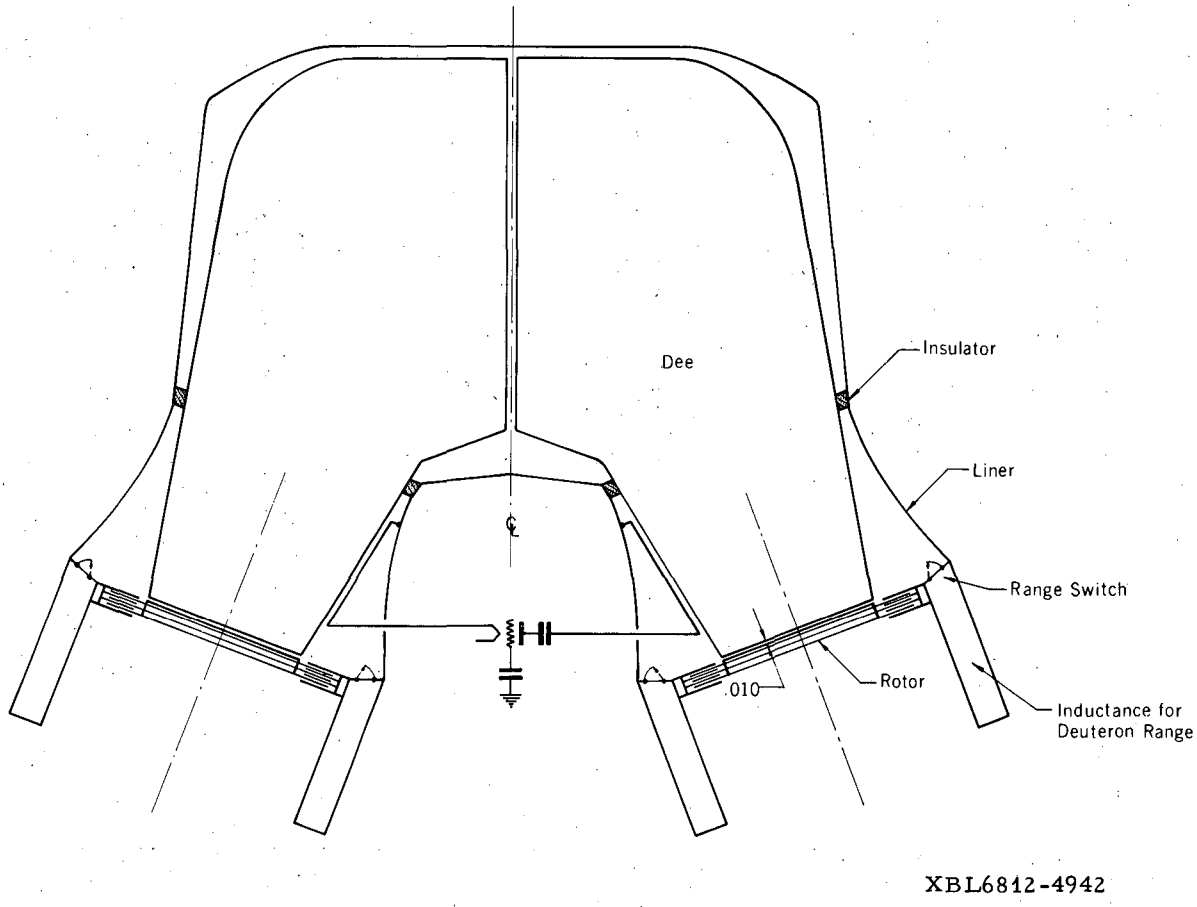

Fig. 2. Plan view of dee with coupling loops.

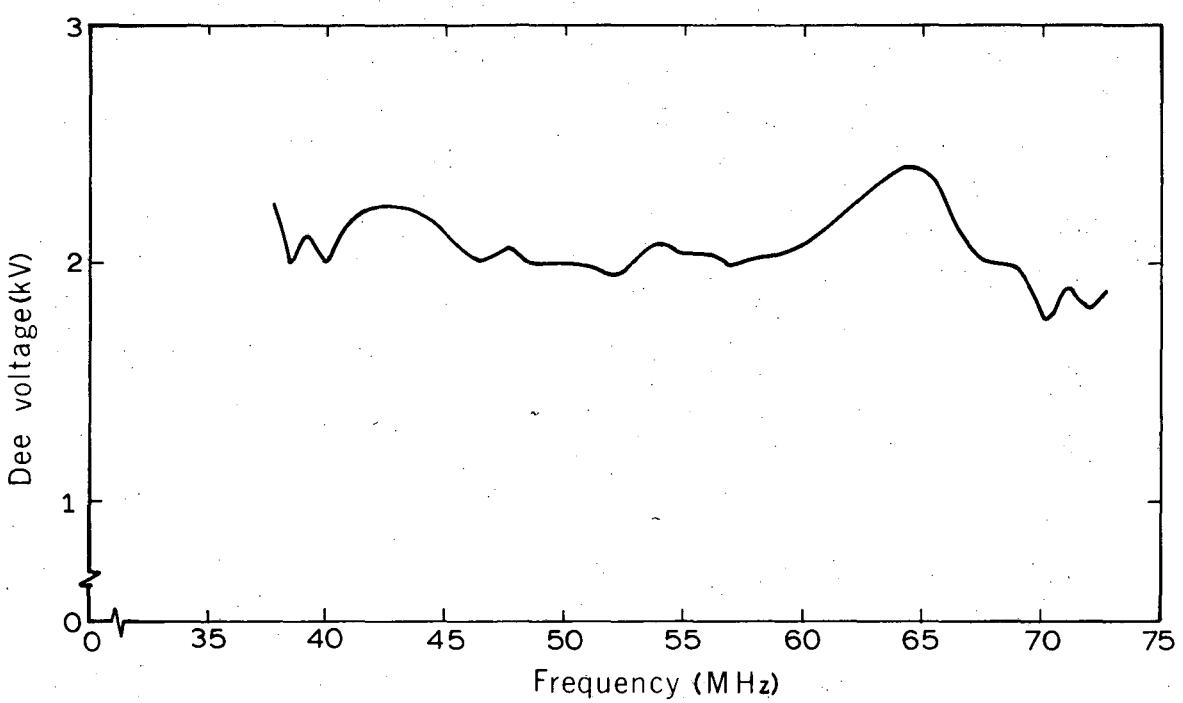

XBL6812-4943

Fig. 3. Dee voltage vs. frequency on proton range.

Physics Research Staff

R. Albert
G. Alexander
L. W. Alvarez
D. S. Ayres
K. Bardakci
O. Benary
E. Berger
K. H. Berkner
W. Bierter
R. W. Birge
R. W. Bland
M. Bloxam
A. Bonney
I. G. Brown
R. J. Budnitz
F. P. Calaprice
O. Chamberlain
G. F. Chew
W. Chinowsky
W. W. Chupp
A. R. Clark
E. Commins
W. S. Cooper
D. G. Coyne
F. S. Crawford
K. M. Crowe
O. I. Dahl
P. M. Dauber
B. H. Deler
S. E. Derenzo
P. H. Eberhard
T. Elioff
R. P. Ely
R. C. Field
A. Firestone
S. H. Flatté
G. C. Fox
J. Franck
W. Frazer
J. H. Friedman
A. B. Galtieri
M. Garnjost
A. A. Garren
E. Geneux
G. Gidal
W. Gilbert
G. Goldhaber
G. F. Grether
I. T. Grodsky
T. Hadeishi
D. E. Hall
M. Halpern
H. H. Heckman
A. C. Helmholz
E. Hubbard
J. Huntzicker
J. D. Jackson
C. E. Johnson
D. L. Judd
J. A. Kadyk
G. E. Kalmus
S. N. Kaplan
R. Karplus
A. N. Kaufman
D. Keefe
E. Kelly
R. W. Kenney
L. T. Kerth
M. H. Krieger
W. Kunkel
L. J. Laslett
J. V. Lepore
E. J. Lofgren
G. R. Lynch
S. Mandelstam
R. Marrus
E. M. McMillan
D. H. Miller
B. J. Moyer
T. Nelson
T. Nelson
B. Pardoe
S. I. Parker
A. S. Parsons
H. W. Patterson
A. C. Paul
V. Perez-Mendez
J. Peterson
W. M. Powell
L. R. Price
M. H. Prior
M. Pripstein
R. Pyle
M. S. Rabin
W. Rarita
C. A. Rey
R. J. Riddell
A. Rindi
T. Rogers
A. H. Rosenfeld
R. R. Ross
W. N. Ross
L. Ruby
S. G. Schmelling
C. Schwartz
E. Segrè
A. M. Sessler
G. Shapiro
H. Shugart
L. Smith
D. R. Snider
F. T. Solmitz
H. P. Stapp
H. M. Steiner
A. W. Stetz
M. L. Stevenson
R. F. Stiening
B. Svensson
W. J. Swiatecki
R. L. Thornton

C. H. Townes
G. H. Trilling
R. D. Tripp
P. Truoel
J. Urrechaga
J. Vale
C. Van Atta
M. A. Wahlig
R. Wallace
K. M. Watson
H. L. Weisberg
W. A. Wenzel
H. White
E. Wichmann
C. E. Wiegand
J. R. Yellin
A. C. Zemach

Permuted Keyword Index

The following pages are an alphabetical permuted index of the material in this report. Author's names are included. The index was prepared by the IBM-1401 computer using the key-word-plus-title program KWPT. All significant words are indexed; insignificant words have been automatically rejected by the computer. In some cases, the titles have been edited slightly to ensure proper word combination during automatic indexing and to provide maximum meaningful information.

Indexed terms are alphabetized and displayed in the left column of the index. The middle column shows the complete title and authors. The page number is given in the right column. Following the word index is the number index, which treats numbers as key words.

Your comments about the usefulness of this index and possible improvements are invited. Address such comments to Miss Gloria Smith, who is responsible for the automated indexing, or to the editor, Mr. Gerald Behman.

PERMUTED KEYWORD INDEX

A + B → 1 + 2 + 3	CROSSING MATRIX FOR THE HELICITY AMPLITUDES OF A + B → 1 + 2 + 3. C. K. CHEN AND K. H. WANG.	16
ABOLINS	ANTIPROTON INTERACTIONS IN HYDROGEN AND DEUTERIUM. M. A. ABOLINS, A. RITTENBERG, AND G. A. SMITH.	31
ABOLINS	DEUTERON MISSING-MASS EXPERIMENT. M. A. ABOLINS, G. S. SMITH, L. H. SMITH, AND A. B. WICKLUND.	35
ABOLINS	PI-PLUS DEUTERON INTERACTIONS FROM 1.1 GEV/C TO 2.3 GEV/C. M. A. ABOLINS, O. I. DAHL, G. DANBURG, D. DAVIES, AND R. RADER.	30
ABOLINS	PI-PLUS DEUTERON INTERACTIONS FROM 2.8 GEV/C TO 4.2 GEV/C. M. A. ABOLINS, O. I. DAHL, AND P. HOCH.	30
ABSORPTION	ABSORPTION AND REGGE EXCHANGE. G. FOX AND G. A. RINGLAND.	4
ACCELERATOR	ACCELERATOR AND MAGNET-DESIGN PROGRAMMING. V. BRADY, B. BURKHART, E. CLOSE, J. COLONIAS, N. HARRISON, R. HEALEY, A. KENNEY, B. LEVINE, B. POWELL, AND S. SACKETT.	99
ACCELERATOR	ACCELERATOR LINK PROGRAM PPU.	104
ACCELERATOR	ANALYSIS OF THE ELECTRON-RING ACCELERATOR. L. J. LASLETT AND A. M. SESSLER.	19
ACCELERATOR	ELECTRON-RING ACCELERATOR.	116
ACCELERATOR	ELECTRON-RING ACCELERATOR PROGRAMMING.	100
ACCELERATOR	PUBLICATIONS, ACCELERATOR STUDY -- LOFGREN.	125
ACCELERATOR STUDY	ACCELERATOR STUDY GROUP ACTIVITIES.	115
ACCELERATORS	EVALUATION OF FLUXES AND DOSE-EQUIVALENT RATES IN NEUTRON FIELDS AROUND HIGH-ENERGY PROTON ACCELERATORS. A. RINDI.	90
ACCELERATORS	TRANSVERSE SPACE-CHARGE EFFECTS IN CIRCULAR ACCELERATORS. F. SACHERER.	19
ACCOUNTING	EVENT ACCOUNTING. S. BUCKMAN.	110
AHLSTRAND	APPLICATIONS PROGRAMMING FOR TRILLING-GOLDHABER GROUP. R. AHLSTRAND, D. ARMSTRONG, E. BURNS, B. HALL, D. LAMB, AND J. MILLER.	94
AHMADZADEH	EXCHANGE DEGENERATE CONSPIRATORS IN NUCLEON-NUCLEON AND NUCLEON-ANTINUCLEON CHARGE-EXCHANGE REACTIONS. A. AHMADZADEH.	4
ALBERT	PARTICLE IDENTIFIER. D. GREINER, R. ALBERT, AND H. H. HECKMAN.	53
ALBRECHT	APPLICATIONS PROGRAMMING FOR POWELL-BIRGE GROUP. H. C. ALBRECHT, M. H. MYERS, J. TYSON, AND J. VISSER, JR.	93
ALBRIGHT	QUASILINEAR EVOLUTION OF THE WEIBEL-KAHN INSTABILITY. N. ALBRIGHT.	20
ALEXANDER	DOUBLE REGGE ANALYSIS OF THE REACTION K-PLUS PROTON GOES TO K-PLUS OMEGA PROTON AT HIGH ENERGY. A. PIGNOTTI, G. ALEXANDER, A. FIRESTONE, C. FU, AND G. GOLDHABER.	6
ALEXANDER	K-PLUS PROTON INTERACTIONS AT 9 GEV/C. G. ALEXANDER, A. FIRESTONE, C. FU, G. GOLDHABER, AND D. LISSAUER.	82
ALEXANDER	LAMBDA-ZERO PROTON INTERACTIONS. G. ALEXANDER, P. GAPOSCHKIN, J. A. KADYK, AND G. H. TRILLING.	82
ALGEBRA	CURRENT ALGEBRA. P. SHERS.	11
ALPHA	STRONG PION-ALPHA SCATTERING WITH ELECTROMAGNETIC CORRECTIONS. R. CHRISTENSEN.	14
ALSTON-GARNJOST	EMULSION SPECTROGRAPH PROGRAM. L. W. ALVAREZ, A. H. BUFFINGTON, P. M. DAUBER, J. H. FRIEDMAN, M. ALSTON-GARNJOST, L. H. SMITH, F. T. SOLMITZ, M. L. STEVENSON, AND M. A. WAHLIG.	38
ALSTON-GARNJOST	K82 EXPERIMENT. S. M. FLATTE, J. H. FRIEDMAN, A. BARBARO-GALTIERI, M. ALSTON-GARNJOST, G. R. LYNCH, M. S. RABIN, F. T. SOLMITZ, P. DAVIS, M. MATISON, N. UYEDA, AND V. WALUCH.	33
ALSTON-GARNJOST	PI82 EXPERIMENT. S. M. FLATTE, J. H. FRIEDMAN, A. BARBARO-GALTIERI, M. ALSTON-GARNJOST, G. R. LYNCH, M. S. RABIN, F. T. SOLMITZ, P. DAVIS, M. MATISON, N. UYEDA, AND V. WALUCH.	34
ALSTON-GARNJOST	STUDY OF THE NEUTRAL K MESON. B. R. WEBBER, F. T. SOLMITZ, F. S. CRAWFORD, JR., AND M. ALSTON-GARNJOST.	30
ALVAREZ	EMULSION SPECTROGRAPH PROGRAM. L. W. ALVAREZ, A. H. BUFFINGTON, P. M. DAUBER, J. H. FRIEDMAN, M. ALSTON-GARNJOST, L. H. SMITH, F. T. SOLMITZ, M. L. STEVENSON, AND M. A. WAHLIG.	38

ALVAREZ	HIGH-ALTITUDE PARTICLE PHYSICS AND COSMIC-RAY EXPERIMENTAL FACILITY. L. W. ALVAREZ, J. A. ANDERSON, A. H. BUFFINGTON, P. M. DAUBER, L. J. LLOYD, L. H. SMITH, AND M. A. WAHLIG.	36
AMPLIFIER	FLUX AMPLIFIER. P. EBERHARD AND R. ROSS.	38
ANALYTICITY	ANALYTICITY IN GENERAL FIELD THEORY. J. BROS.	16
ANALYTICITY	MACROSCOPIC CAUSALITY AND ANALYTICITY PROPERTIES OF THE S MATRIX. D. IAGOLNITZER AND H. P. STAPP.	17
ANDERSON	BP66 EXPERIMENT. J. A. ANDERSON AND D. B. SMITH.	31
ANDERSON	HIGH-ALTITUDE PARTICLE PHYSICS AND COSMIC-RAY EXPERIMENTAL FACILITY. L. W. ALVAREZ, J. A. ANDERSON, A. H. BUFFINGTON, P. M. DAUBER, L. J. LLOYD, L. H. SMITH, AND M. A. WAHLIG.	36
ANKENBRANDT	NUCLEON-NUCLEON TRIPLE SCATTERING. C. M. ANKENBRANDT, D. CHENG, L. T. KERTH, K. C. LEUNG, B. MACDONALD, AND P. T. SURKO.	58
ANTIK	ANTIK PROTON GOES TO LAMBDA PI INTERACTIONS AT LOW ENERGY. J. H. CHAN AND J. A. KADYK.	82
ANTIK-ZERO	THE REACTIONS K-MINUS PROTON GOES TO ANTIK-ZERO NEUTRON AND K-MINUS PROTON GOES TO LAMBDA PI-ZERO. S. M. FLATTE, A. BARBARO-GALTIERI, R. D. TRIPP, AND C. G. WOHL.	26
ANTINUCLEON	WHY THE TOTAL NUCLEON-ANTINUCLEON CROSS SECTION IS LARGER THAN THE TOTAL NUCLEON-NUCLEON CROSS SECTION AT NONASYMPTOTIC INCIDENT ENERGY. P. D. TING.	7
ANTIPROTON	ANTIPROTON INTERACTIONS IN HYDROGEN AND DEUTERIUM. M. A. ABOLINS, A. RITTENBERG, AND G. A. SMITH.	31
ANTIPROTON	ANTIPROTON-PROTON INTERACTIONS. R. BURNS, P. CONDON, M. MANDELKERN, J. SCHULTZ, W. CHINOWSKY, AND W. R. GAGE.	75
ARBAB	LOW-ENERGY THEOREMS AND THE POMERANCHUK TRAJECTORY FOR COMPTON SCATTERING. F. ARBAB AND R. C. BROWER.	14
ARBAB	ZERO-MASS BOSONS IN S-MATRIX THEORY. F. ARBAB AND R. C. BROWER.	14
ARMSTRONG	APPLICATIONS PROGRAMMING FOR TRILLING-GOLDHABER GROUP. R. AHLSTRAND, D. ARMSTRONG, E. BURNS, B. HALL, D. LAMB, AND J. MILLER.	94
AROUND	EVALUATION OF FLUXES AND DOSE-EQUIVALENT RATES IN NEUTRON FIELDS AROUND HIGH-ENERGY PROTON ACCELERATORS. A. RINDI.	90
AROUND	K-MINUS PROTON INTERACTIONS AROUND 1 GEV/C AND THE Y*0(1815). J. SAHOURIA.	67
ARTWORK	PROGRAM FOR PRINTED-CIRCUIT ARTWORK.	103
ASSIGNMENTS	DIRECT EVIDENCE FOR THE MULTIPLET ASSIGNMENTS OF LAMBDA(1520) AND LAMBDA(1405). R. D. TRIPP, R. O. BANGERTER, A. BARBARO-GALTIERI, AND T. S. MAST.	28
ASYMMETRY	K-ZERO-MU3 CHARGE ASYMMETRY. D. H. MILLER, R. J. BUDNITZ, W. N. ROSS, R. L. MCCARTHY, AND J. H. BREWER.	49
ASYMMETRY	K-ZERO-2 CHARGE ASYMMETRY. D. H. MILLER AND M. A. PACIOTTI.	48
ASYMPTOTIC	WEAK ASYMPTOTIC CAUSALITY OF THE HAAG-RUELLE S MATRIX. D. N. WILLIAMS.	17
ATCHLEY	COMPUTER OPERATIONS. F. M. ATCHLEY AND P. A. RHODES.	106
ATOM	IONIZATION OF A HEAVILY IONIZED ATOM BY ELECTRON IMPACT. M. GOLSHANI.	20
ATOMIC	ATOMIC BEAM STUDIES. H. SHUGART.	79
ATOMS	K-MINUS MESIC ATOMS. C. WIEGAND AND R. KUNSELMAN.	73
ATOMS	OBSERVATION OF DELTA-MINUS HYPERONIC ATOMS. C. WIEGAND.	73
ATOMS	PIONIC ATOMS. R. KUNSELMAN AND G. A. GRIN.	74
ATOMS	REARRANGEMENT COLLISIONS BETWEEN SLOW ATOMS AND IONS. J. C. CHEN AND K. M. WATSON.	20
AU-YANG	CALCULATION OF STRONG-COUPLING-CONSTANT SHIFTS. M. K. AU-YANG.	13
AUTOMATIC	DAPR -- FULLY AUTOMATIC EVENT SCANNING AND MEASUREMENT. B. BRITTON, J. FRANZ, W.-S. GEE, D. HALL, L. JONTULOVICH, H. WHITE, AND F. WINDORSKI.	110
AYERS	COMPARISON OF THE LIFETIMES OF POSITIVE AND NEGATIVE PIONS. D. S. AYERS, D. O. CALDWELL, A. M. CORMACK, V. B. ELINGS, A. J. GREENBERG, W. P. HESSE, R. W. KENNEY, AND R. J. MORRISON.	60
A2	EVIDENCE FOR EXCHANGE OF THE RHO AND A2 REGGE POLES IN THE REACTIONS PI-PLUS PROTON GOES TO PI-ZERO DELTA-PLUSPLUS, PI-PLUS PROTON GOES TO ETA-ZERO DELTA-PLUSPLUS, AND K-PLUS PROTON GOES TO K-ZERO DELTA-PLUSPLUS. R. MATHEWS.	5
BACKSCATTERED	BACKSCATTERED LASER BEAM AT SLAC. W. PODOLSKY, M. S. RABIN, J. J. MURRAY, P. KLEIN, AND C. K. SINCLAIR.	34
BACKWARD	POLARIZATION IN BACKWARD NEUTRON-PROTON SCATTERING AT 3 GEV TO 6 GEV. P. ROBRISH, O. CHAMBERLAIN, R. D. FIELD, JR., R. Z. FUZESY, M. J. LONGO, C. MOREHOUSE, T. POWELL, S. ROCK, S. SHANNON, G. SHAPIRO, AND H. WEISBERG.	77

BAKER	MATHEMATICS AND COMPUTING. J. A. BAKER.	93
BAKER	PUBLICATIONS -- BAKER.	107
BANGERTER	CHARGE-EXCHANGE (K-MINUS PROTON GOES TO ANTIK-ZERO NEUTRON) AND ELASTIC (K-MINUS PROTON GOES TO K-MINUS PROTON) REACTIONS. T. S. MAST, R. BANGERTER, A. BARBARO-GALTIERI, AND R. D. TRIPP.	29
BANGERTER	DIRECT EVIDENCE FOR THE MULTIPLET ASSIGNMENTS OF LAMBDA(1520) AND LAMBDA(1405). R. D. TRIPP, R. O. BANGERTER, A. BARBARO-GALTIERI, AND T. S. MAST.	28
BANGERTER	STUDY OF SIGMA DECAY PARAMETERS. R. D. TRIPP, F. T. SOLMITZ, AND R. O. BANGERTER.	28
BARASH-SCHMIDT	PARTICLE DATA GROUP. A. H. ROSENFELD, N. BARASH-SCHMIDT, A. BARBARO-GALTIERI, O. BENARY, L. R. PRICE, P. SODING, AND C. G. WOHL.	44
BARBARO-GALTIERI	CHARGE-EXCHANGE (K-MINUS PROTON GOES TO ANTIK-ZERO NEUTRON) AND ELASTIC (K-MINUS PROTON GOES TO K-MINUS PROTON) REACTIONS. T. S. MAST, R. BANGERTER, A. BARBARO-GALTIERI, AND R. D. TRIPP.	29
BARBARO-GALTIERI	DIRECT EVIDENCE FOR THE MULTIPLET ASSIGNMENTS OF LAMBDA(1520) AND LAMBDA(1405). R. D. TRIPP, R. O. BANGERTER, A. BARBARO-GALTIERI, AND T. S. MAST.	28
BARBARO-GALTIERI	K-MINUS INTERACTIONS IN DEUTERIUM. A. BARBARO-GALTIERI, M. MATISON, AND A. RITTENBERG.	27
BARBARO-GALTIERI	K-MINUS PROTON GOES TO LAMBDA PI-PLUS PI-MINUS AND K-MINUS PROTON GOES TO LAMBDA + MISSING MASS. T. S. MAST, A. BARBARO-GALTIERI, AND R. D. TRIPP.	29
BARBARO-GALTIERI	K82 EXPERIMENT. S. M. FLATTE, J. H. FRIEDMAN, A. BARBARO-GALTIERI, M. ALSTON-GARNJOST, G. R. LYNCH, M. S. RABIN, F. T. SOLMITZ, P. DAVIS, M. MATISON, N. UYEDA, AND V. WALUCH.	33
BARBARO-GALTIERI	PARTICLE DATA GROUP. A. H. ROSENFELD, N. BARASH-SCHMIDT, A. BARBARO-GALTIERI, O. BENARY, L. R. PRICE, P. SODING, AND C. G. WOHL.	44
BARBARO-GALTIERI	PI82 EXPERIMENT. S. M. FLATTE, J. H. FRIEDMAN, A. BARBARO-GALTIERI, M. ALSTON-GARNJOST, G. R. LYNCH, M. S. RABIN, F. T. SOLMITZ, P. DAVIS, M. MATISON, N. UYEDA, AND V. WALUCH.	34
BARBARO-GALTIERI	STUDY OF THE REACTION K-MINUS PROTON GOES TO SIGMA PLUSMINUS PI-MINUSPLUS. P. M. DAUBER AND A. BARBARO-GALTIERI.	27
BARBARO-GALTIERI	THE REACTIONS K-MINUS PROTON GOES TO ANTIK-ZERO NEUTRON AND K-MINUS PROTON GOES TO LAMBDA PI-ZERO. S. M. FLATTE, A. BARBARO-GALTIERI, R. D. TRIPP, AND C. G. WOHL.	26
BARDAKCI	THEORIES AT INFINITE MOMENTUM. K. BARDAKCI AND M. B. HALPERN.	10
BARYON	A REGGE CLASSIFICATION OF THE BARYON RESONANCES. S. KLEIN.	5
BASINGER	BIOMEDICAL PROGRAMMING. D. BASINGER, D. HARRELL, C. HERRIN, R. HINKINS, W. HOGAN, H. HOLMES, M. HOROVITZ, T. MAHAN, E. SCHROEDER, M. SIMMONS, AND K. WILEY.	100
BEALS	SYSTEMS PROGRAMMING. E. BEALS, W. BENSON, J. BORGES, D. BRAINARD, M. CLINNICK, W. DEMPSTER, R. FINK, R. FRIEDMAN, J. GLASNER, W. HUTCHINSON, J. JOHNSTON, J. KNIGHT, S. PENNY, D. STEVENS, AND R. TRACY.	103
BEAM	ATOMIC BEAM STUDIES. H. SHUGART.	79
BEAM	BACKSCATTERED LASER BEAM AT SLAC. W. PODOLSKY, M. S. RABIN, J. J. MURRAY, P. KLEIN, AND C. K. SINCLAIR.	34
BEAMS	INTERACTION OF INTENSE, RELATIVISTIC ELECTRON BEAMS WITH SELF-GENERATED PLASMAS. S. D. PUTNAM.	20
BELSHE	MISCELLANEOUS PROGRAMMING. R. BELSHE, D. HARRELL, M. SIMMONS, K. WILEY, AND E. WILLIAMS.	103
BENARY	PARTICLE DATA GROUP. A. H. ROSENFELD, N. BARASH-SCHMIDT, A. BARBARO-GALTIERI, O. BENARY, L. R. PRICE, P. SODING, AND C. G. WOHL.	44
BENSON	RESEARCH IN MATHEMATICS AND COMPUTER SCIENCE. W. BENSON, P. CONCUS, H. HANERFELD, D. JENSON, L. MEISSNER, G. NOONEY, AND L. VARDAS.	105
BENSON	SYSTEMS PROGRAMMING. E. BEALS, W. BENSON, J. BORGES, D. BRAINARD, M. CLINNICK, W. DEMPSTER, R. FINK, R. FRIEDMAN, J. GLASNER, W. HUTCHINSON, J. JOHNSTON, J. KNIGHT, S. PENNY, D. STEVENS, AND R. TRACY.	103
BERARDO	MEASUREMENT OF THE DIFFERENTIAL CROSS SECTION FOR PI-MINUS PROTON GOES TO NEUTRON GAMMA AT 200 MEV, 320 MEV, AND 370 MEV. A. S. L. PARSONS, P. TRUOEL, P. BERARDO, R. P. HADDOCK, J. A. HELLAND, B. M. K. NEFKENS, L. VERHEY, AND M. E. ZELLER.	47
BERGER	DOUBLE PERIPHERAL MODEL FOR THREE-BODY FINAL-STATE REACTIONS. E. L. BERGER.	3

BETHE-SALPETER	CALCULATION OF SCATTERING WITH A SPINOR BETHE-SALPETER EQUATION. B. C. MCINNIS.	9
BETHE-SALPETER	EXCHANGE POTENTIALS IN THE BETHE-SALPETER EQUATION. B. C. MCINNIS.	8
BEVATRON	BEVATRON CONTROL PROGRAMMING.	103
BEVATRON	BEVATRON OPERATIONS.	127
BEVATRON	PUBLICATIONS, BEVATRON -- LOFGREN.	128
BIERTER	ON INTERACTING LOCAL QUANTUM FIELDS DESCRIBING MANY MASSES AND SPINS. W. BIERTER AND K. M. BITAR.	15
BIERTER	T PRODUCTS AND SPECTRAL-FUNCTION SUM RULES IN A THEORY OF CURRENTS. W. BIERTER AND K. M. BITAR.	15
BINSTOCK	1G4 NUCLEON-NUCLEON PHASE SHIFT AND THE SIGMA MESON. J. BINSTOCK.	16
BIOMEDICAL	BIOMEDICAL DATA PROCESSING.	102
BIOMEDICAL	BIOMEDICAL INSTRUMENTATION PROGRAMMING.	100
BIOMEDICAL	BIOMEDICAL PROGRAMMING. D. BASINGER, D. HARRELL, C. HERRIN, R. HINKINS, W. HOGAN, H. HOLMES, M. HOROVITZ, T. MAHAN, E. SCHROEDER, M. SIMMONS, AND K. WILEY.	100
BIOMEDICAL	MISCELLANEOUS BIOMEDICAL COMPUTATIONS.	102
BIOMEDICAL	PROGRAMMING FOR QUANTITATIVE BIOMEDICAL MODELS.	101
BIRGE	DATA REDUCTION. R. W. BIRGE AND P. W. WEBER.	69
BIRGE	ON-LINE SYSTEM. R. W. BIRGE AND P. W. WEBER.	69
BIRGE	PI-PLUS PROTON INTERACTIONS BETWEEN 2.9 GEV/C AND 4.1 GEV/C. G. GIDAL, R. BIRGE, G. BORREANI, D. BROWN, AND F. LOTT.	68
BIRGE	TWO-PRONG EVENTS IN PI-PLUS PROTON FILM BETWEEN 1.3 GEV/C AND 1.85 GEV/C. R. W. BIRGE AND G. E. KALMUS.	69
BITAR	ON INTERACTING LOCAL QUANTUM FIELDS DESCRIBING MANY MASSES AND SPINS. W. BIERTER AND K. M. BITAR.	15
BITAR	T PRODUCTS AND SPECTRAL-FUNCTION SUM RULES IN A THEORY OF CURRENTS. W. BIERTER AND K. M. BITAR.	15
BLAND	K-PLUS DEUTERON INTERACTIONS FROM 860 MEV/C TO 1580 MEV/C. R. W. BLAND, A. A. HIRATA, G. GOLDHABER, V. H. SEEGER, G. H. TRILLING, AND C. G. WOHL.	81
BLOCK	FCF -- GEOMETRY, KINEMATICAL ANALYSIS, DATA DISPLAY. M. BLOCK, S. BUCKMAN, D. CHRISLER, V. MORGAN, AND F. WINDORSKI.	110
BLOCK	NONLINEAR BLOCK SUCCESSIVE OVERRELAXATION.	106
BLOOM	SEARCH FOR T VIOLATION IN INELASTIC ELECTRON-PROTON SCATTERING. O. CHAMBERLAIN, G. SHAPIRO, H. WEISBERG, P. ROBRISH, S. ROCK, S. SHANNON, R. TAYLOR, L. MO, E. BLOOM, J. LITT, H. KENDALL, AND J. FRIEDMAN.	76
BOOSTER	NAL BOOSTER SYNCHROTRON.	115
BOOTSTRAP	CROSSING-SYMMETRIC BOOTSTRAP SOLUTION AND LARGE-ANGLE PROTON-PROTON SCATTERING. K. M. ONG AND J. HARTE.	9
BORGES	SYSTEMS PROGRAMMING. E. BEALS, W. BENSON, J. BORGES, D. BRAINARD, M. CLINNICK, W. DEMPSTER, R. FINK, R. FRIEDMAN, J. GLASNER, W. HUTCHINSON, J. JOHNSTON, J. KNIGHT, S. PENNY, D. STEVENS, AND R. TRACY.	103
BORREANI	PI-PLUS PROTON INTERACTIONS BETWEEN 2.9 GEV/C AND 4.1 GEV/C. G. GIDAL, R. BIRGE, G. BORREANI, D. BROWN, AND F. LOTT.	68
BORREANI	STUDY OF THE STRANGE-PARTICLE CHANNELS IN PI-PLUS PROTON BETWEEN 1.3 GEV/C AND 1.65 GEV/C. G. BORREANI, G. KALMUS, AND J. LOUIE.	68
BOSONS	ZERO-MASS BOSONS IN S-MATRIX THEORY. F. ARBAB AND R. C. BROWER.	14
BP66	BP66 EXPERIMENT. J. A. ANDERSON AND D. B. SMITH.	31
BRADY	ACCELERATOR AND MAGNET-DESIGN PROGRAMMING. V. BRADY, B. BURKHART, E. CLOSE, J. COLONIAS, N. HARRISON, R. HEALEY, A. KENNEY, B. LEVINE, B. POWELL, AND S. SACKETT.	99
BRAINARD	SYSTEMS PROGRAMMING. E. BEALS, W. BENSON, J. BORGES, D. BRAINARD, M. CLINNICK, W. DEMPSTER, R. FINK, R. FRIEDMAN, J. GLASNER, W. HUTCHINSON, J. JOHNSTON, J. KNIGHT, S. PENNY, D. STEVENS, AND R. TRACY.	103
BRANCHING	MEASUREMENT OF THE (K-PLUS GOES TO POSITRON NU)/(K-PLUS GOES TO MU-PLUS NU) BRANCHING RATIO. A. R. CLARK, B. CORK, T. ELIOFF, D. NEWTON, L. T. KERTH, J. F. MCREYNOLDS, AND W. A. WENZEL.	57
BREWER	K-ZERO-MU3 CHARGE ASYMMETRY. D. H. MILLER, R. J. BUDNITZ, W. N. ROSS, R. L. MCCARTHY, AND J. H. BREWER.	49
BRITTON	DAPR -- FULLY AUTOMATIC EVENT SCANNING AND MEASUREMENT. B. BRITTON, J. FRANZ, W.-S. GEE, D. HALL, L. JONTULOVICH, H. WHITE, AND F. WINDORSKI.	110
BRODY	LRL-SLAC EXPERIMENT ON PI-MINUS PROTON INELASTIC REACTIONS. B. DELER, L. R. PRICE, A. H. ROSENFELD, P. SODING, D. HERNDON, R. LONGACRE, D. LEITH, A. BRODY, AND B. SHEN.	33

BROS	ANALYTICITY IN GENERAL FIELD THEORY. J. BROS.	16
BROWER	LOW-ENERGY THEOREMS AND THE POMERANCHUK TRAJECTORY FOR COMPTON SCATTERING. F. ARBAB AND R. C. BROWER.	14
BROWER	ZERO-MASS BOSONS IN S-MATRIX THEORY. F. ARBAB AND R. C. BROWER.	14
BROWN	NUCLEAR CHEMISTRY PROGRAMMING. N. BROWN, P. COLLOM, M. ITZKOWITZ, G. LITTON, E. QUIGG, C. RUGGE, AND E. SCHROEDER.	97
BROWN	PI-PLUS PROTON INTERACTIONS BETWEEN 2.9 GEV/C AND 4.1 GEV/C. G. GIDAL, R. BIRGE, G. BORREANI, D. BROWN, AND F. LOTT.	68
BUBBLE	25-INCH HYDROGEN BUBBLE CHAMBER. W. M. POWELL, J. A. KADYK, AND G. J. ECKMAN.	87
BUCKMAN	EVENT ACCOUNTING. S. BUCKMAN.	110
BUCKMAN	FCF -- GEOMETRY, KINEMATICAL ANALYSIS, DATA DISPLAY. M. BLOCK, S. BUCKMAN, D. CHRISLER, V. MORGAN, AND F. WINDORSKI.	110
BUDNITZ	K-ZERO-MU3 CHARGE ASYMMETRY. D. H. MILLER, R. J. BUDNITZ, W. N. ROSS, R. L. MCCARTHY, AND J. H. BREWER.	49
BUFFINGTON	EMULSION SPECTROGRAPH PROGRAM. L. W. ALVAREZ, A. H. BUFFINGTON, P. M. DAUBER, J. H. FRIEDMAN, M. ALSTON-GARNJOST, L. H. SMITH, F. T. SOLMITZ, M. L. STEVENSON, AND M. A. WAHLIG.	38
BUFFINGTON	HIGH-ALTITUDE PARTICLE PHYSICS AND COSMIC-RAY EXPERIMENTAL FACILITY. L. W. ALVAREZ, J. A. ANDERSON, A. H. BUFFINGTON, P. M. DAUBER, L. J. LLOYD, L. H. SMITH, AND M. A. WAHLIG.	36
BULOS	PHOTOPRODUCTION OF VECTOR MESONS AT SLAC. L. KAUFMAN, V. PEREZ-MENDEZ, A. W. STETZ, S. H. WILLIAMS, F. BULOS, R. DIEBOLD, R. LARSEN, D. LEITH, B. F. RICHTER, AND W. BUSZA.	62
BURKHART	ACCELERATOR AND MAGNET-DESIGN PROGRAMMING. V. BRADY, B. BURKHART, E. CLOSE, J. COLONIAS, N. HARRISON, R. HEALEY, A. KENNEY, B. LEVINE, B. POWELL, AND S. SACKETT.	99
BURNS	ANTIPROTON-PROTON INTERACTIONS. R. BURNS, P. CONDON, M. MANDELKERN, J. SCHULTZ, W. CHINOWSKY, AND W. R. GAGE.	75
BURNS	APPLICATIONS PROGRAMMING FOR TRILLING-GOLDHABER GROUP. R. AHLSTRAND, D. ARMSTRONG, E. BURNS, B. HALL, D. LAMB, AND J. MILLER.	94
BUSZA	PHOTOPRODUCTION OF VECTOR MESONS AT SLAC. L. KAUFMAN, V. PEREZ-MENDEZ, A. W. STETZ, S. H. WILLIAMS, F. BULOS, R. DIEBOLD, R. LARSEN, D. LEITH, B. F. RICHTER, AND W. BUSZA.	62
BUTLER	PI-PLUS PROTON INTERACTION AT 3.7 GEV/C. W. R. BUTLER, D. G. COYNE, AND J. N. MACNAUGHTON.	81
CALCULATION	CALCULATION OF SCATTERING WITH A SPINOR BETHE-SALPETER EQUATION. B. C. MCINNIS.	9
CALCULATION	CALCULATION OF STRONG-COUPLING-CONSTANT SHIFTS. M. K. AU-YANG.	13
CALCULATION	CALCULATION OF THE LAMBDA-K-NUCLEON AND SIGMA-K-NUCLEON COUPLING CONSTANTS G USING KAON-NUCLEON DISPERSION RELATIONS. T. W. ROGERS.	13
CALDWELL	COMPARISON OF THE LIFETIMES OF POSITIVE AND NEGATIVE PIONS. D. S. AYERS, D. O. CALDWELL, A. M. CORMACK, V. B. ELINGS, A. J. GREENBERG, W. P. HESSE, R. W. KENNEY, AND R. J. MORRISON.	60
CAPILLARY	CAPILLARY FLUID MECHANICS.	106
CAPTURE	PARTIAL CAPTURE RATES OF MUONS BY OXYGEN-16 LEADING TO EXCITED NUCLEAR STATES OF NITROGEN-15. S. N. KAPLAN, R. V. PYLE, L. E. TEMPLE, AND G. F. VALBY.	59
CAPTURE	RADIATIVE CAPTURE OF STOPPED PI-MINUS MESONS ON NUCLEI. K. M. CROWE, A. S. L. PARSONS, AND P. TRUOEL.	47
CASCADE	PRODUCTION AND DECAY OF CASCADE HYPERONS. P. M. DAUBER AND R. MULLER.	25
CAUSALITY	MACROSCOPIC CAUSALITY AND ANALYTICITY PROPERTIES OF THE S MATRIX. D. IAGOLNITZER AND H. P. STAPP.	17
CAUSALITY	WEAK ASYMPTOTIC CAUSALITY OF THE HAAG-RUELLE S MATRIX. D. N. WILLIAMS.	17
CAVE-4	CONTINUING PROJECT -- 88-INCH-CYCLOTRON CAVE-4 SHIELDING STUDIES. L. D. STEPHENS.	90
CENCE	K-ZERO L GOES TO 2 PI-ZERO. A. C. HELMHOLZ, R. W. KENNEY, I. R. LINSCOTT, B. J. MOYER, W. P. OLIVER, S. I. PARKER, C. A. REY, R. J. CENCE, B. D. JONES, V. Z. PETERSON, V. J. STENGER, AND J. WILSON.	61
CENCE	KE4 EXPERIMENT. B. GAULD, V. PEREZ-MENDEZ, R. J. CENCE, B. D. JONES, R. MORGADO, V. Z. PETERSON, AND L. SHIRAISHI.	60

CHAFFEE	ETA-ZERO DECAY AND PI-ZERO PI-ZERC NEUTRON EXPERIMENTS. R. CHAFFEE, O. DAHL, R. W. KENNEY, J. NELSON, M. PRIPSTEIN, T. B. RISSER, A. SKUJA, AND M. A. WAHLIG.	59
CHAMBER	25-INCH HYDROGEN BUBBLE CHAMBER. W. M. POWELL, J. A. KADYK, AND G. J. ECKMAN.	87
CHAMBERLAIN	POLARIZATION IN BACKWARD NEUTRON-PROTON SCATTERING AT 3 GEV TO 6 GEV. P. ROBRISH, O. CHAMBERLAIN, R. D. FIELD, JR., R. Z. FUZESY, M. J. LONGO, C. MOREHOUSE, T. POWELL, S. ROCK, S. SHANNON, G. SHAPIRO, AND H. WEISBERG.	77
CHAMBERLAIN	POLARIZED-PROTON TARGET IMPROVEMENTS. O. CHAMBERLAIN, W. GORN, C. MOREHOUSE, T. POWELL, P. ROBRISH, S. ROCK, S. SHANNON, G. SHAPIRO, AND H. WEISBERG.	77
CHAMBERLAIN	SEARCH FOR T VIOLATION IN INELASTIC ELECTRON-PROTON SCATTERING. O. CHAMBERLAIN, G. SHAPIRO, H. WEISBERG, P. ROBRISH, S. ROCK, S. SHANNON, R. TAYLOR, L. MO, E. BLOOM, J. LITT, H. KENDALL, AND J. FRIEDMAN.	76
CHAN	ANTIK PROTON GOES TO LAMBDA PI INTERACTIONS AT LOW ENERGY. J. H. CHAN AND J. A. KADYK.	82
CHANNELS	STUDY OF THE STRANGE-PARTICLE CHANNELS IN PI-PLUS PROTON BETWEEN 1.3 GEV/C AND 1.65 GEV/C. G. BORREANI, G. KALMUS, AND J. LOUIE.	68
CHARGE-EXCHANGE	CHARGE-EXCHANGE (K-MINUS PROTON GOES TO ANTIK-ZERO NEUTRON) AND ELASTIC (K-MINUS PROTON GOES TO K-MINUS PROTON) REACTIONS. T. S. MAST, R. BANGERTER, A. BARBARO-GALTIERI, AND R. D. TRIPP.	29
CHARGE-EXCHANGE	EXCHANGE DEGENERATE CONSPIRATORS IN NUCLEON-NUCLEON AND NUCLEON-ANTINUCLEON CHARGE-EXCHANGE REACTIONS. A. AHMADZADEH.	4
CHEMISTRY	NUCLEAR CHEMISTRY PROGRAMMING. N. BROWN, P. COLLOM, M. ITZKOWITZ, G. LITTON, E. QUIGG, C. RUGGE, AND E. SCHROEDER.	97
CHEN	CROSSING MATRIX FOR THE HELICITY AMPLITUDES OF $A + B \rightarrow 1 + 2 + 3$. C. K. CHEN AND K.-H. WANG.	16
CHEN	REARRANGEMENT COLLISIONS BETWEEN SLOW ATOMS AND IONS. J. C. CHEN AND K. M. WATSON.	20
CHENG	MEASUREMENT OF NEUTRON PROTON GOES TO GAMMA DEUTERON ANGULAR DISTRIBUTION AS A DIRECT TEST OF TIME REVERSAL IN THE ELECTROMAGNETIC INTERACTION. D. CHENG, V. PEREZ-MENDEZ, J. M. SPERINDE, J. A. HELLAND, B. L. SCHROCK, R. P. HADDOCK, J. DETOEUF, M. J. LONGO, S. WILSON, AND K. K. YOUNG.	63
CHENG	NUCLEON-NUCLEON TRIPLE SCATTERING. C. M. ANKENBRANDT, D. CHENG, L. T. KERTH, K. C. LEUNG, B. MACDONALD, AND P. T. SURKO.	58
CHEW	MULTIPERIPHERAL DYNAMICS. G. F. CHEW, C. DETAR, AND A. PIGNOTTI.	1
CHEW	PUBLICATIONS -- CHEW.	22
CHINOWSKY	ANTIPROTON-PROTON INTERACTIONS. R. BURNS, P. CONDON, M. MANDELKERN, J. SCHULTZ, W. CHINOWSKY, AND W. R. GAGE.	75
CHINOWSKY	LOW-ENERGY PI-MINUS PROTON INTERACTIONS. W. CHINOWSKY, W. R. GAGE, J. H. MULVEY, AND D. H. SAXON.	75
CHINOWSKY	NUCLEON-NUCLEON INTERACTIONS. W. CHINOWSKY AND W. R. GAGE.	75
CHRISLER	FCF -- GEOMETRY, KINEMATICAL ANALYSIS, DATA DISPLAY. M. BLOCK, S. BUCKMAN, D. CHRISLER, V. MORGAN, AND F. WINDORSKI.	110
CHRISTENSEN	STRONG PION-ALPHA SCATTERING WITH ELECTROMAGNETIC CORRECTIONS. R. CHRISTENSEN.	14
CHU	A MODEL OF INDEFINITELY RISING TRAJECTORIES. S.-Y. CHU, C. I. TAN, AND P. D. TING.	4
CHU	AN I=1 PION-PION SUM RULE AND THE DERIVATIVE OF THE S-WAVE AMPLITUDES. S.-Y. CHU AND B. R. DESAI.	12
CHU	THE POMERANCHON AS A MIRAGE TRAJECTORY. S. Y. CHU, C. I. TAN, AND P. D. TING.	8
CLARK	DIBOSON PRODUCTION BY 2-GEV/C PIONS. A. R. CLARK, B. CORK, T. ELIOFF, L. T. KERTH, T. N. RANGASWAMY, AND W. A. WENZEL.	57
CLARK	MEASUREMENT OF THE (K-PLUS GOES TO POSITRON NU)/(K-PLUS GOES TO MU-PLUS NU) BRANCHING RATIO. A. R. CLARK, B. CORK, T. ELIOFF, D. NEWTON, L. T. KERTH, J. F. MCREYNOLDS, AND W. A. WENZEL.	57
CLARK	NEUTRAL LEPTONIC CURRENTS. A. R. CLARK, T. ELIOFF, R. C. FIELD, H. J. FRISCH, R. P. JOHNSON, D. KEEFE, L. T. KERTH, M. H. KRIEGER, D. NEWTON, AND W. A. WENZEL.	57
CLASSIFICATION	A REGGE CLASSIFICATION OF THE BARYON RESONANCES. S. KLEIN.	5
CLINNICK	SYSTEMS PROGRAMMING. E. BEALS, W. BENSON, J. BORGES, D. BRAINARD, M. CLINNICK, W. DEMPSTER, R. FINK, R. FRIEDMAN, J. GLASNER, W. HUTCHINSON, J. JOHNSTON, J. KNIGHT, S. PENNY, D. STEVENS, AND R. TRACY.	103

COLLABORATION	PROGRAM IN COLLABORATION WITH MOYER-HELMHOLZ GROUP. O. I. DAHL, M. PRIPSTEIN, AND M. WALIG.	34
COLLISIONS	NONSTRANGE INTERACTIONS IN PROTON-PROTON COLLISIONS AT 6.6 GEV/C. E. GELLERT AND G. A. SMITH.	32
COLLISIONS	REARRANGEMENT COLLISIONS BETWEEN SLOW ATOMS AND IONS. J. C. CHEN AND K. M. WATSON.	20
COLLISIONS	STRANGE-PARTICLE INTERACTIONS IN PROTON-PROTON COLLISIONS AT 5.5 GEV/C AND 6.6 GEV/C. A. B. WICKLUND AND G. A. SMITH.	33
COLLOM	NUCLEAR CHEMISTRY PROGRAMMING. N. BROWN, P. COLLOM, M. ITZKOWITZ, G. LITTON, E. QUIGG, C. RUGGE, AND E. SCHROEDER.	97
COLONIAS	ACCELERATOR AND MAGNET-DESIGN PROGRAMMING. V. BRADY, B. BURKHART, E. CLOSE, J. COLONIAS, N. HARRISON, R. HEALEY, A. KENNEY, B. LEVINE, B. POWELL, AND S. SACKETT.	99
COMPTON	LOW-ENERGY THEOREMS AND THE POMERANCHUK TRAJECTORY FOR COMPTON SCATTERING. F. ARBAB AND R. C. BROWER.	14
COMPTON-SCATTERING	COMPTON-SCATTERING SUM RULES. G. C. FOX AND D. Z. FREEDMAN.	12
COMPUTATIONS	MISCELLANEOUS BIOMEDICAL COMPUTATIONS.	102
COMPUTER	COMPUTER OPERATIONS. F. M. ATCHLEY AND P. A. RHODES.	106
COMPUTER	COMPUTER PROGRAM DEVELOPMENT.	109
COMPUTER	COMPUTER TYPOGRAPHY.	105
COMPUTER	RESEARCH IN MATHEMATICS AND COMPUTER SCIENCE. W. BENSON, P. CONCUS, H. HANERFELD, D. JENSON, L. MEISSNER, G. NOONEY, AND L. VARDAS.	105
COMPUTER	SMALL COMPUTER SYSTEMS.	97
COMPUTING	MATHEMATICS AND COMPUTING. J. A. BAKER.	93
CONCUS	RESEARCH IN MATHEMATICS AND COMPUTER SCIENCE. W. BENSON, P. CONCUS, H. HANERFELD, D. JENSON, L. MEISSNER, G. NOONEY, AND L. VARDAS.	105
CONDON	ANTIPROTON-PROTON INTERACTIONS. R. BURNS, P. CONDON, M. MANDELKERN, J. SCHULTZ, W. CHINOWSKY, AND W. R. GAGE.	75
CONSPIRACY	DO FINITE-ENERGY SUM RULES IN PION PHOTOPRODUCTION PROVE THE EXISTENCE OF A PION CONSPIRACY. J. D. JACKSON AND C. QUIGG.	2
CONSPIRACY	PION CONSPIRACY AND CONTINUOUS-MOMENT SUM RULES. R. L. THEWS.	12
CONSPIRATORS	EXCHANGE DEGENERATE CONSPIRATORS IN NUCLEON-NUCLEON AND NUCLEON-ANTINUCLEON CHARGE-EXCHANGE REACTIONS. A. AHMADZADEH.	4
CONTINUOUS-MOMENT	PION CONSPIRACY AND CONTINUOUS-MOMENT SUM RULES. R. L. THEWS.	12
CORK	DIBOSON PRODUCTION BY 2-GEV/C PIONS. A. R. CLARK, B. CORK, T. ELIOFF, L. T. KERTH, T. N. RANGASWAMY, AND W. A. WENZEL.	57
CORK	MEASUREMENT OF THE (K-PLUS GOES TO POSITRON NU)/(K-PLUS GOES TO MU-PLUS NU) BRANCHING RATIO. A. R. CLARK, B. CORK, T. ELIOFF, D. NEWTON, L. T. KERTH, J. F. MCREYNOLDS, AND W. A. WENZEL.	57
CORK	TOTAL CROSS SECTIONS AT COSMIC-RAY ENERGIES. B. CORK.	58
CORMACK	COMPARISON OF THE LIFETIMES OF POSITIVE AND NEGATIVE PIONS. D. S. AYERS, D. O. CALDWELL, A. M. CORMACK, V. B. ELINGS, A. J. GREENBERG, W. P. HESSE, R. W. KENNEY, AND R. J. MORRISON.	60
COSMIC-RAY	HIGH-ALTITUDE PARTICLE PHYSICS AND COSMIC-RAY EXPERIMENTAL FACILITY. L. W. ALVAREZ, J. A. ANDERSON, A. H. BUFFINGTON, P. M. DAUBER, L. J. LLOYD, L. H. SMITH, AND M. A. WAHLIG.	36
COSMIC-RAY	LRL-SLAC COSMIC-RAY EXPERIMENT. S. M. FLATTE, M. L. STEVENSON, R. DECOSTER, W. TONER, AND T. ZIPF.	38
COSMIC-RAY	SOME IMPLICATIONS OF A NEW SOURCE OF COSMIC-RAY MUONS. S. PAKVASA.	21
COSMIC-RAY	TOTAL CROSS SECTIONS AT COSMIC-RAY ENERGIES. B. CORK.	58
COSTER	DERIVATION OF THE CUTKOSKY FORMULA. J. COSTER AND H. P. STAPP.	16
COUNTING	LOW-BACKGROUND COUNTING FACILITY. A. R. SMITH AND H. A. WOLLENBERG.	89
COUPLING	CALCULATION OF THE LAMBDA-K-NUCLEON AND SIGMA-K-NUCLEON COUPLING CONSTANTS G USING KAON-NUCLEON DISPERSION RELATIONS. T. W. ROGERS.	13
COYNE	PI-PLUS PROTON INTERACTION AT 3.7 GEV/C. W. R. BUTLER, D. G. COYNE, AND J. N. MACNAUGHTON.	81
CRAWFORD, JR	HYPERON PRODUCTION AND DECAY. F. S. CRAWFORD, JR. AND J. C. DOYLE.	25
CRAWFORD, JR	STUDY OF THE NEUTRAL K MESON. B. R. WEBBER, F. T. SOLMITZ, F. S. CRAWFORD, JR., AND M. ALSTON-GARNJOST.	30

CROSS SECTION	CROSS-SECTION PROGRAMMING.	99
CROSS SECTION	MEASUREMENT OF THE DIFFERENTIAL CROSS SECTION FOR PI-MINUS PROTON GOES TO NEUTRON GAMMA BETWEEN 500-MEV AND 1200-MEV PION ENERGIES. K. M. CROWE, A. FAINBERG, A. S. L. PARSONS, P. TRUOEL, R. P. HADDOCK, B. M. K. NEFKENS, L. J. VERHEY, A. WEISS, AND M. E. ZELLER.	50
CROSS SECTION	MEASUREMENT OF THE DIFFERENTIAL CROSS SECTION FOR PI-MINUS PROTON GOES TO NEUTRON GAMMA AT 200 MEV, 320 MEV, AND 370 MEV. A. S. L. PARSONS, P. TRUOEL, P. BERARDO, R. P. HADDOCK, J. A. HELLAND, B. M. K. NEFKENS, L. VERHEY, AND M. E. ZELLER.	47
CROSS SECTION	WHY THE TOTAL NUCLEON-ANTINUCLEON CROSS SECTION IS LARGER THAN THE TOTAL NUCLEON-NUCLEON CROSS SECTION AT NONASYMPTOTIC INCIDENT ENERGY. P. D. TING.	7
CROSS SECTIONS	REGGE POLES AND THE PROTON-PROTON DIFFERENTIAL CROSS SECTIONS FROM SERPUKHOV. W. RARITA.	6
CROSS SECTIONS	TOTAL CROSS SECTIONS AT COSMIC-RAY ENERGIES. B. CORK.	58
CROSS-OVER	MECHANISM FOR CROSS-OVER. G. FOX, R. LOGAN, AND G. A. RINGLAND.	5
CROSSING	CROSSING MATRIX FOR THE HELICITY AMPLITUDES OF $A + B \rightarrow 1 + 2 + 3$. C. K. CHEN AND K.-H. WANG.	16
CROSSING	SUMS OF DIRECT-CHANNEL REGGE-POLE CONTRIBUTIONS AND CROSSING SYMMETRY. N. N. KHURI.	2
CROSSING-SYMMETRIC	CROSSING-SYMMETRIC BOOTSTRAP SOLUTION AND LARGE-ANGLE PROTON-PROTON SCATTERING. K. M. ONG AND J. HARTE.	9
CROWE	MEASUREMENT OF THE DIFFERENTIAL CROSS SECTION FOR PI-MINUS PROTON GOES TO NEUTRON GAMMA BETWEEN 500-MEV AND 1200-MEV PION ENERGIES. K. M. CROWE, A. FAINBERG, A. S. L. PARSONS, P. TRUOEL, R. P. HADDOCK, B. M. K. NEFKENS, L. J. VERHEY, A. WEISS, AND M. E. ZELLER.	50
CROWE	PION FORM FACTOR. K. M. CROWE, A. S. L. PARSONS, AND A. FAINBERG.	50
CROWE	PION-PION S-WAVE INTERACTION. K. M. CROWE, N. DAIRIKI, AND T. MAUNG.	49
CROWE	PUBLICATIONS -- CROWE, MILLER.	51
CROWE	RADIATIVE CAPTURE OF STOPPED PI-MINUS MESONS ON NUCLEI. K. M. CROWE, A. S. L. PARSONS, AND P. TRUOEL.	47
CURRENT	CURRENT ALGEBRA. P. SHERS.	11
CURRENTS	NEUTRAL LEPTONIC CURRENTS. A. R. CLARK, T. ELIOFF, R. C. FIELD, H. J. FRISCH, R. P. JOHNSON, D. KEEFE, L. T. KERTH, M. H. KRIEGER, D. NEWTON, AND W. A. WENZEL.	57
CURRENTS	NONRELATIVISTIC QUANTUM MECHANICS IN TERMS OF CURRENTS. D. J. GROSS.	9
CURRENTS	SUGAWARA'S THEORY OF CURRENTS. A. RABL.	10
CURRENTS	T PRODUCTS AND SPECTRAL-FUNCTION SUM RULES IN A THEORY OF CURRENTS. W. BIERTER AND K. M. BITAR.	15
CURRENTS	THEORY OF CURRENTS AND THE NONSTRONG INTERACTIONS. D. J. GROSS AND M. B. HALPERN.	10
CUTKOSKY	DERIVATION OF THE CUTKOSKY FORMULA. J. COSTER AND H. P. STAPP.	16
CYCLOTRON	MODEL OF RADIO-FREQUENCY SYSTEM FOR IMPROVEMENT OF 184-INCH CYCLOTRON. L. KANSTEIN.	130
CYCLOTRON	STATUS OF THE 184-INCH CYCLOTRON EXTRACTION STUDIES. A. C. PAUL.	50
CYCLOTRON	184-INCH CYCLOTRON. J. VALE.	129
DAHL	ETA-ZERO DECAY AND PI-ZERO PI-ZERO NEUTRON EXPERIMENTS. R. CHAFFEE, O. DAHL, R. W. KENNEY, J. NELSON, M. PRIPSTEIN, T. B. RISSER, A. SKUJA, AND M. A. WAHLIG.	59
DAHL	PI-PLUS DEUTERON INTERACTIONS FROM 1.1 GEV/C TO 2.3 GEV/C. M. A. ABOLINS, O. I. DAHL, G. DANBURG, D. DAVIES, AND R. RADER.	30
DAHL	PI-PLUS DEUTERON INTERACTIONS FROM 2.8 GEV/C TO 4.2 GEV/C. M. A. ABOLINS, O. I. DAHL, AND P. HOCH.	30
DAHL	PROGRAM IN COLLABORATION WITH MOYER-HELMHOLZ GROUP. O. I. DAHL, M. PRIPSTEIN, AND M. WALIG.	34
DAIRIKI	PION-PION S-WAVE INTERACTION. K. M. CROWE, N. DAIRIKI, AND T. MAUNG.	49
DANBURG	PI-PLUS DEUTERON INTERACTIONS FROM 1.1 GEV/C TO 2.3 GEV/C. M. A. ABOLINS, O. I. DAHL, G. DANBURG, D. DAVIES, AND R. RADER.	30
DAPR	DAPR -- FULLY AUTOMATIC EVENT SCANNING AND MEASUREMENT. B. BRITTON, J. FRANZ, W.-S. GEE, D. HALL, L. JONTULOVICH, H. WHITE, AND F. WINDORSKI.	110
DATA HANDLING	DATA HANDLING -- WHITE.	109
DATA PROCESSING	DATA PROCESSING -- WHITE.	112
DATA-ANALYSIS	DATA-ANALYSIS PROGRAMS, GROUP A.	42
DATA-EDITING	DATA-EDITING PROGRAMS, GROUP A.	42

DATA-REDUCTION	DATA-REDUCTION OPERATIONS. E. H. HOEDEMAKER.	38
DAUBER	EMULSION SPECTROGRAPH PROGRAM. L. W. ALVAREZ, A. H. BUFFINGTON, P. M. DAUBER, J. H. FRIEDMAN, M. ALSTON-GARNJOST, L. H. SMITH, F. T. SOLMITZ, M. L. STEVENSON, AND M. A. WAHLIG.	38
DAUBER	HIGH-ALTITUDE PARTICLE PHYSICS AND COSMIC-RAY EXPERIMENTAL FACILITY. L. W. ALVAREZ, J. A. ANDERSON, A. H. BUFFINGTON, P. M. DAUBER, L. J. LLOYD, L. H. SMITH, AND M. A. WAHLIG.	36
DAUBER	PRODUCTION AND DECAY OF CASCADE HYPERONS. P. M. DAUBER AND R. MULLER.	25
DAUBER	STUDY OF THE REACTION K-MINUS PROTON GOES TO SIGMA PLUSMINUS PI-MINUSPLUS. P. M. DAUBER AND A. BARBARO-GALTIERI.	27
DAVIES	PI-PLUS DEUTERON INTERACTIONS FROM 1.1 GEV/C TO 2.3 GEV/C. M. A. ABOLINS, O. I. DAHL, G. DANBURG, D. DAVIES, AND R. RADER.	30
DAVIS	HAZE -- SEMIAUTOMATIC EVENT MEASUREMENT. P. DAVIS, W.-S. GEE, AND L. SHALZ.	109
DAVIS	K82 EXPERIMENT. S. M. FLATTE, J. H. FRIEDMAN, A. BARBARO-GALTIERI, M. ALSTON-GARNJOST, G. R. LYNCH, M. S. RABIN, F. T. SOLMITZ, P. DAVIS, M. MATISON, N. UYEDA, AND V. WALUCH.	33
DAVIS	PI82 EXPERIMENT. S. M. FLATTE, J. H. FRIEDMAN, A. BARBARO-GALTIERI, M. ALSTON-GARNJOST, G. R. LYNCH, M. S. RABIN, F. T. SOLMITZ, P. DAVIS, M. MATISON, N. UYEDA, AND V. WALUCH.	34
DAVIS	TRIST -- SYSTEM MONITOR. P. DAVIS AND C. OSBORNE.	110
DECAY	ETA-ZERO DECAY AND PI-ZERO PI-ZERO NEUTRON EXPERIMENTS. R. CHAFFEE, O. DAHL, R. W. KENNEY, J. NELSON, M. PRIPSTEIN, T. B. RISSER, A. SKUJA, AND M. A. WAHLIG.	59
DECAY	HYPERON PRODUCTION AND DECAY. F. S. CRAWFORD, JR. AND J. C. DOYLE.	25
DECAY	NEUTRAL DECAY MODES OF THE ETA MESON.	34
DECAY	PRODUCTION AND DECAY OF CASCADE HYPERONS. P. M. DAUBER AND R. MULLER.	25
DECAY	SEARCH FOR THE DECAY N*(1688) GOES TO NEUTRON ETA.	35
DECAY	STUDY OF SIGMA DECAY PARAMETERS. R. D. TRIPP, F. T. SOLMITZ, AND R. O. BANGERTER.	28
DECAY	THE DECAY OMEGA GOES TO PI-PLUS PI-MINUS. S. M. FLATTE.	26
DECAYS	DECAYS OF NEUTRAL PSEUDOSCALAR MESONS INTO LEPTON PAIRS. C. QUIGG AND J. D. JACKSON.	14
DECAYS	RARE DECAYS OF CHARGED K MESONS. R. HILDEBRAND, R. STIENING, AND C. WIEGAND.	73
DECAYS	SIGMA INTERACTIONS AND DECAYS. L. K. GERSHWIN.	28
DECOSTER	LRL-SLAC COSMIC-RAY EXPERIMENT. S. M. FLATTE, M. L. STEVENSON, R. DECOSTER, W. TONER, AND T. ZIPF.	38
DEGENERACY	CONNECTION BETWEEN OCTET DOMINANCE AND EXCHANGE DEGENERACY. H. LEE.	12
DEGENERATE	EXCHANGE DEGENERATE CONSPIRATORS IN NUCLEON-NUCLEON AND NUCLEON-ANTINUCLEON CHARGE-EXCHANGE REACTIONS. A. AHMADZADEH.	4
DELER	LRL-SLAC EXPERIMENT ON PI-MINUS PROTON INELASTIC REACTIONS. B. DELER, L. R. PRICE, A. H. ROSENFELD, P. SODING, D. HERNDON, R. LONGACRE, D. LEITH, A. BRODY, AND B. SHEN.	33
DELTA-MINUS	OBSERVATION OF DELTA-MINUS HYPERONIC ATOMS. C. WIEGAND.	73
DELTA-PLUSPLUS	EVIDENCE FOR EXCHANGE OF THE RHO AND A2 REGGE POLES IN THE REACTIONS PI-PLUS PROTON GOES TO PI-ZERO DELTA-PLUSPLUS, PI-PLUS PROTON GOES TO ETA-ZERO DELTA-PLUSPLUS, AND K-PLUS PROTON GOES TO K-ZERO DELTA-PLUSPLUS. R. MATHEWS.	5
DEMPSTER	SYSTEMS PROGRAMMING. E. BEALS, W. BENSON, J. BORGES, D. BRAINARD, M. CLINNICK, W. DEMPSTER, R. FINK, R. FRIEDMAN, J. GLASNER, W. HUTCHINSON, J. JOHNSTON, J. KNIGHT, S. PENNY, D. STEVENS, AND R. TRACY.	103
DERIVATIVE	AN I=1 PION-PION SUM RULE AND THE DERIVATIVE OF THE S-WAVE AMPLITUDES. S. Y. CHU AND B. R. DESAI.	12
DESAI	AN I=1 PION-PION SUM RULE AND THE DERIVATIVE OF THE S-WAVE AMPLITUDES. S. Y. CHU AND B. R. DESAI.	12
DESIGN	MAGNET DESIGN PROGRAMMING.	99
DESIGN	NAL MAGNET DESIGN.	115
DETAR	MULTIPERIPHERAL DYNAMICS. G. F. CHEW, C. DETAR, AND A. PIGNOTTI.	1
DETOEUF	MEASUREMENT OF NEUTRON PROTON GOES TO GAMMA DEUTERON ANGULAR DISTRIBUTION AS A DIRECT TEST OF TIME REVERSAL IN THE ELECTROMAGNETIC INTERACTION. D. CHENG, V. PEREZ-MENDEZ, J. M. SPERINDE, J. A. HELLAND, B. L. SCHROCK, R. P. HADDOCK, J. DETOEUF, M. J. LONGO, S. WILSON, AND K. K. YOUNG.	63

DEUTERIUM	ANTIPROTON INTERACTIONS IN HYDROGEN AND DEUTERIUM. M. A. ABOLINS, A. RITTENBERG, AND G. A. SMITH.	31
DEUTERIUM	K-MINUS INTERACTIONS IN DEUTERIUM. A. BARBARO-GALTIERI, M. MATISON, AND A. RITTENBERG.	27
DEUTERON	DEUTERON MISSING-MASS EXPERIMENT. M. A. ABOLINS, G. S. SMITH, L. H. SMITH, AND A. B. WICKLUND.	35
DEUTERON	K-MINUS DEUTERON AND K-MINUS NEUTRON ELASTIC SCATTERING. G. E. KALMUS AND N. JEW.	67
DEUTERON	K-PLUS DEUTERON INTERACTIONS FROM 860 MEV/C TO 1580 MEV/C. R. W. BLAND, A. A. HIRATA, G. GOLDHABER, V. H. SEEGER, G. H. TRILLING, AND C. G. WOHL.	81
DEUTERON	MEASUREMENT OF NEUTRON PROTON GOES TO GAMMA DEUTERON ANGULAR DISTRIBUTION AS A DIRECT TEST OF TIME REVERSAL IN THE ELECTROMAGNETIC INTERACTION. D. CHENG, V. PEREZ-MENDEZ, J. M. SPERINDE, J. A. HELLAND, B. L. SCHROCK, R. P. HADDOCK, J. DETOEUF, M. J. LONGO, S. WILSON, AND K. K. YOUNG.	63
DEUTERON	PI-PLUS DEUTERON INTERACTIONS FROM 1.1 GEV/C TO 2.3 GEV/C. M. A. ABOLINS, O. I. DAHL, G. DANBURG, D. DAVIES, AND R. RADER.	30
DEUTERON	PI-PLUS DEUTERON INTERACTIONS FROM 2.8 GEV/C TO 4.2 GEV/C. M. A. ABOLINS, O. I. DAHL, AND P. HOCH.	30
DEUTERON	SEARCH FOR A TWO-PI-ZERO RESONANCE NEAR 730 MEV IN PI-PLUS DEUTERON INTERACTIONS. R. J. MANNING AND G. A. SMITH.	31
DIBOSON	DIBOSON PRODUCTION BY 2-GEV/C PIONS. A. R. CLARK, B. CORK, T. ELIOFF, L. T. KERTH, T. N. RANGASWAMY, AND W. A. WENZEL.	57
DIBOSON	NEUTRAL DIBOSON EXPERIMENT.	35
DIEBOLD	PHOTOPRODUCTION OF VECTOR MESONS AT SLAC. L. KAUFMAN, V. PEREZ-MENDEZ, A. W. STETZ, S. H. WILLIAMS, F. BULOS, R. DIEBOLD, R. LARSEN, D. LEITH, B. F. RICHTER, AND W. BUSZA.	62
DIFFERENCE	FOURTH-ORDER ELECTROMAGNETIC PI-PLUS PI-ZERO MASS DIFFERENCE. I. S. GERSTEIN AND H. J. SCHNITZER.	11
DIFFERENTIAL	MEASUREMENT OF THE DIFFERENTIAL CROSS SECTION FOR PI-MINUS PROTON GOES TO NEUTRON GAMMA BETWEEN 500-MEV AND 1200-MEV PION ENERGIES. K. M. CROWE, A. FAINBERG, A. S. L. PARSONS, P. TRUOEL, R. P. HADDOCK, B. M. K. NEFKENS, L. J. VERHEY, A. WEISS, AND M. E. ZELLER.	50
DIFFERENTIAL	MEASUREMENT OF THE DIFFERENTIAL CROSS SECTION FOR PI-MINUS PROTON GOES TO NEUTRON GAMMA AT 200 MEV, 320 MEV, AND 370 MEV. A. S. L. PARSONS, P. TRUOEL, P. BERARDO, R. P. HADDOCK, J. A. HELLAND, B. M. K. NEFKENS, L. VERHEY, AND M. E. ZELLER.	47
DIFFERENTIAL	REGGE POLES AND THE PROTON-PROTON DIFFERENTIAL CROSS SECTIONS FROM SERPUKHOV. W. RARITA.	6
DIRECT-CHANNEL	SUMS OF DIRECT-CHANNEL REGGE-POLE CONTRIBUTIONS AND CROSSING SYMMETRY. N. N. KHURI.	2
DISPERSION	CALCULATION OF THE LAMBDA-K-NUCLEON AND SIGMA-K-NUCLEON COUPLING CONSTANTS G USING KAON-NUCLEON DISPERSION RELATIONS. T. W. ROGERS.	13
DISPLAY	FOF -- GEOMETRY, KINEMATICAL ANALYSIS, DATA DISPLAY. M. BLOCK, S. BUCKMAN, D. CHRISLER, V. MORGAN, AND F. WINDORSKI.	110
DOMINANCE	CONNECTION BETWEEN OCTET DOMINANCE AND EXCHANGE DEGENERACY. H. LEE.	12
DOSE-EQUIVALENT	EVALUATION OF FLUXES AND DOSE-EQUIVALENT RATES IN NEUTRON FIELDS AROUND HIGH-ENERGY PROTON ACCELERATORS. A. RINDI.	90
DOSIMETRY	RADIATION DOSIMETRY PROGRAMMING.	102
DOYLE	HYPERON PRODUCTION AND DECAY. F. S. CRAWFORD, JR. AND J. C. DOYLE.	25
DYNAMICS	EXPLORATION FOR S-MATRIX DYNAMICS. R. C. HWA.	8
DYNAMICS	MULTIPERIPHERAL DYNAMICS. G. F. CHEW, C. DETAR, AND A. PIGNOTTI.	1
DYNAMICS	THE EQUIVALENCE PRINCIPLE AND DYNAMICS. D. GREENBERGER.	21
D66	D66 EXPERIMENT. P. EBERHARD, G. R. LYNCH, AND M. PRIPSTEIN.	32
EBERHARD	D66 EXPERIMENT. P. EBERHARD, G. R. LYNCH, AND M. PRIPSTEIN.	32
EBERHARD	FLUX AMPLIFIER. P. EBERHARD AND R. ROSS.	38
EBERHARD	RESONANCE PRODUCTION IN K-MINUS PROTON GOES TO SIGMA PI PI, SIGMA PI PI PI. P. EBERHARD, J. H. FRIEDMAN, M. PRIPSTEIN, AND R. R. ROSS.	26
ECKMAN	25-INCH HYDROGEN BUBBLE CHAMBER. W. M. POWELL, J. A. KADYK, AND G. J. ECKMAN.	87

EFFORT	GROUP A PROGRAMMING EFFORT. B. PARDOE.	41
ELASTIC	CHARGE-EXCHANGE (K-MINUS PROTON GOES TO ANTIK-ZERO NEUTRON) AND ELASTIC (K-MINUS PROTON GOES TO K-MINUS PROTON) REACTIONS. T. S. MAST, R. BANGERTER, A. BARBARO-GALTIERI, AND R. D. TRIPP.	29
ELASTIC	K-MINUS DEUTERON AND K-MINUS NEUTRON ELASTIC SCATTERING. G. E. KALMUS AND N. JEW.	67
ELASTIC	POLARIZATION IN PI-PLUS PROTON AND PI-MINUS PROTON ELASTIC SCATTERING FROM 250 MEV TO 410 MEV. W. GORN, C. MOREHOUSE, T. POWELL, P. ROBRISH, S. ROCK, S. SHANNON, H. STEINER, AND H. WEISBERG.	76
ELECTROMAGNETIC	ANALYSIS OF PION-HELIUM SCATTERING FOR THE PION ELECTROMAGNETIC FORM FACTOR. C. T. MOTTERSHEAD.	15
ELECTROMAGNETIC	FOURTH-ORDER ELECTROMAGNETIC PI-PLUS PI-ZERO MASS DIFFERENCE. I. S. GERSTEIN AND H. J. SCHNITZER.	11
ELECTROMAGNETIC	MEASUREMENT OF NEUTRON PROTON GOES TO GAMMA DEUTERON ANGULAR DISTRIBUTION AS A DIRECT TEST OF TIME REVERSAL IN THE ELECTROMAGNETIC INTERACTION. D. CHENG, V. PEREZ-MENDEZ, J. M. SPERINDE, J. A. HELLAND, B. L. SCHROCK, R. P. HADDOCK, J. DETOEUF, M. J. LONGO, S. WILSON, AND K. K. YOUNG.	63
ELECTROMAGNETIC	STRONG PION ALPHA SCATTERING WITH ELECTROMAGNETIC CORRECTIONS. R. CHRISTENSEN.	14
ELECTRON	INTERACTION OF INTENSE, RELATIVISTIC ELECTRON BEAMS WITH SELF-GENERATED PLASMAS. S. D. PUTNAM.	20
ELECTRON-PROTON	SEARCH FOR T VIOLATION IN INELASTIC ELECTRON-PROTON SCATTERING. O. CHAMBERLAIN, G. SHAPIRO, H. WEISBERG, P. ROBRISH, S. ROCK, S. SHANNON, R. TAYLOR, L. MO, E. BLOOM, J. LITT, H. KENDALL, AND J. FRIEDMAN.	76
ELECTRON-RING	ANALYSIS OF THE ELECTRON-RING ACCELERATOR. L. J. LASLETT AND A. M. SESSLER.	19
ELECTRON-RING	ELECTRON-RING ACCELERATOR.	116
ELECTRON-RING	ELECTRON-RING ACCELERATOR PROGRAMMING.	100
ELECTRONIC	WIRE SPARK CHAMBERS AND ELECTRONIC READOUTS. R. L. GROVE, G. L. STOKER, AND V. PEREZ-MENDEZ.	63
ELINGS	COMPARISON OF THE LIFETIMES OF POSITIVE AND NEGATIVE PIONS. D. S. AYERS, D. O. CALDWELL, A. M. CORMACK, V. B. ELINGS, A. J. GREENBERG, W. P. HESSE, R. W. KENNEY, AND R. J. MORRISON.	60
ELIOFF	DIBOSON PRODUCTION BY 2-GEV/C PIONS. A. R. CLARK, B. CORK, T. ELIOFF, L. T. KERTH, T. N. RANGASWAMY, AND W. A. WENZEL.	57
ELIOFF	MEASUREMENT OF THE (K-PLUS GOES TO POSITRON NU)/(K-PLUS GOES TO MU-PLUS NU) BRANCHING RATIO. A. R. CLARK, B. CORK, T. ELIOFF, D. NEWTON, L. T. KERTH, J. F. MCREYNOLDS, AND W. A. WENZEL.	57
ELIOFF	NEUTRAL LEPTONIC CURRENTS. A. R. CLARK, T. ELIOFF, R. C. FIELD, H. J. FRISCH, R. P. JOHNSON, D. KEEFE, L. T. KERTH, M. H. KRIEGER, D. NEWTON, AND W. A. WENZEL.	57
EMULSION	EMULSION SPECTROGRAPH PROGRAM. L. W. ALVAREZ, A. H. BUFFINGTON, P. M. DAUBER, J. H. FRIEDMAN, M. ALSTON-GARNJOST, L. H. SMITH, F. T. SOLMITZ, M. L. STEVENSON, AND M. A. WAHLIG.	38
EMULSION	STOPPING-POWER DIFFERENCES OF CHARGED PIONS IN EMULSION. H. H. HECKMAN.	54
ENERGIES	MEASUREMENT OF THE DIFFERENTIAL CROSS SECTION FOR PI-MINUS PROTON GOES TO NEUTRON GAMMA BETWEEN 500-MEV AND 1200-MEV PION ENERGIES. K. M. CROWE, A. FAINBERG, A. S. L. PARSONS, P. TRUOEL, R. P. HADDOCK, B. M. K. NEFKENS, L. J. VERHEY, A. WEISS, AND M. E. ZELLER.	50
ENERGIES	TOTAL CROSS SECTIONS AT COSMIC-RAY ENERGIES. B. CORK.	58
ENERGY	ANTIK PROTON GOES TO LAMBDA PI INTERACTIONS AT LOW ENERGY. J. H. CHAN AND J. A. KADYK.	82
ENERGY	DOUBLE REGGE ANALYSIS OF THE REACTION K-PLUS PROTON GOES TO K-PLUS OMEGA PROTON AT HIGH ENERGY. A. PIGNOTTI, G. ALEXANDER, A. FIRESTONE, C. FU, AND G. GOLDHABER.	6
ENERGY	WHY THE TOTAL NUCLEON-ANTINUCLEON CROSS SECTION IS LARGER THAN THE TOTAL NUCLEON-NUCLEON CROSS SECTION AT NONASYMPTOTIC INCIDENT ENERGY. P. D. TING.	7
ENGINEER	SHOP AND ENGINEER JOB-SCHEDULING PROGRAM SHUFL.	103
EQUATION	CALCULATION OF SCATTERING WITH A SPINOR BETHE-SALPETER EQUATION. B. C. MCINNIS.	9
EQUATION	EXCHANGE POTENTIALS IN THE BETHE-SALPETER EQUATION. B. C. MCINNIS.	8
EQUATIONS	NUMERICAL SOLUTION METHODS FOR FIRST-ORDER FREDHOLM INTEGRAL EQUATIONS. J. T. ROUTTI.	90

EQUATIONS	RELATIVISTIC WAVE EQUATIONS FOR STRONG INTERACTIONS. C. ZEMACH.	8
EQUIVALENCE	THE EQUIVALENCE PRINCIPLE AND DYNAMICS. D. GREENBERGER.	21
ETA	NEUTRAL DECAY MODES OF THE ETA MESCN.	34
ETA	SEARCH FOR THE DECAY N*(1688) GOES TO NEUTRON ETA.	35
ETA-ZERO	ETA-ZERO DECAY AND PI-ZERO PI-ZERO NEUTRON EXPERIMENTS. R. CHAFFEE, O. DAHL, R. W. KENNEY, J. NELSON, M. PRIPSTEIN, T. B. RISSER, A. SKUJA, AND M. A. WAHLIG.	59
ETA-ZERO	EVIDENCE FOR EXCHANGE OF THE RHO AND A2 REGGE POLES IN THE REACTIONS PI-PLUS PROTON GOES TO PI-ZERO DELTA-PLUSPLUS, PI-PLUS PROTON GOES TO ETA-ZERO DELTA-PLUSPLUS, AND K-PLUS PROTON GOES TO K-ZERO DELTA-PLUSPLUS. R. MATHEWS.	5
ETIOLOGY	ETIOLOGY OF LEUKEMIA.	106
EVENT	DAPR -- FULLY AUTOMATIC EVENT SCANNING AND MEASUREMENT. B. BRITTON, J. FRANZ, W.-S. GEE, D. HALL, L. JONTULOVICH, H. WHITE, AND F. WINDORSKI.	110
EVENT	EVENT ACCOUNTING. S. BUCKMAN.	110
EVENT	HAZE -- SEMIAUTOMATIC EVENT MEASUREMENT. P. DAVIS, W.-S. GEE, AND L. SHALZ.	109
EVENTS	TWO-PRONG EVENTS IN PI-PLUS PROTON FILM BETWEEN 1.3 GEV/C AND 1.85 GEV/C. R. W. BIRGE AND G. E. KALMUS.	69
EVOLUTION	QUASILINEAR EVOLUTION OF THE WEIBEL-KAHN INSTABILITY. N. ALBRIGHT.	20
EXCHANGE	ABSORPTION AND REGGE EXCHANGE. G. FOX AND G. A. RINGLAND.	4
EXCHANGE	CONNECTION BETWEEN OCTET DOMINANCE AND EXCHANGE DEGENERACY. H. LEE.	12
EXCHANGE	EVIDENCE FOR EXCHANGE OF THE RHO AND A2 REGGE POLES IN THE REACTIONS PI-PLUS PROTON GOES TO PI-ZERO DELTA-PLUSPLUS, PI-PLUS PROTON GOES TO ETA-ZERO DELTA-PLUSPLUS, AND K-PLUS PROTON GOES TO K-ZERO DELTA-PLUSPLUS. R. MATHEWS.	5
EXCHANGE	EXCHANGE DEGENERATE CONSPIRATORS IN NUCLEON-NUCLEON AND NUCLEON-ANTINUCLEON CHARGE-EXCHANGE REACTIONS. A. AHMADZADEH.	4
EXCHANGE	EXCHANGE POTENTIALS IN THE BETHE-SALPETER EQUATION. B. C. MCINNIS.	8
EXPANSION	REGGE-POLE EXPANSION AT T=0. J. H. WEIS.	6
EXPLORATION	EXPLORATION FOR S-MATRIX DYNAMICS. R. C. HWA.	8
EXTRACTION	STATUS OF THE 184-INCH CYCLOTRON EXTRACTION STUDIES. A. C. PAUL.	50
EXTREMA	INFLUENCE OF FLUCTUATING FORCES AT ORBIT EXTREMA. B. R. PATTERSON.	20
FACILITY	HIGH-ALTITUDE PARTICLE PHYSICS AND COSMIC-RAY EXPERIMENTAL FACILITY. L. W. ALVAREZ, J. A. ANDERSON, A. H. BUFFINGTON, P. M. DAUBER, L. J. LLOYD, L. H. SMITH, AND M. A. WAHLIG.	36
FACILITY	LOW-BACKGROUND COUNTING FACILITY. A. R. SMITH AND H. A. WOLLENBERG.	89
FAINBERG	MEASUREMENT OF THE DIFFERENTIAL CROSS SECTION FOR PI-MINUS PROTON GOES TO NEUTRON GAMMA BETWEEN 500-MEV AND 1200-MEV PION ENERGIES. K. M. CROWE, A. FAINBERG, A. S. L. PARSONS, P. TRUOEL, R. P. HADDOCK, B. M. K. NEFKENS, L. J. VERHEY, A. WEISS, AND M. E. ZELLER.	50
FAINBERG	PION FORM FACTOR. K. M. CROWE, A. S. L. PARSONS, AND A. FAINBERG.	50
FCF	FCF -- GEOMETRY, KINEMATICAL ANALYSIS, DATA DISPLAY. M. BLOCK, S. BUCKMAN, D. CHRISLER, V. MORGAN, AND F. WINDORSKI.	110
FIELD, JR	POLARIZATION IN BACKWARD NEUTRON-PROTON SCATTERING AT 3 GEV TO 6 GEV. P. ROBRISH, O. CHAMBERLAIN, R. D. FIELD, JR., R. Z. FUZESY, M. J. LONGO, C. MOREHOUSE, T. POWELL, S. ROCK, S. SHANNON, G. SHAPIRO, AND H. WEISBERG.	77
FILM	TWO-PRONG EVENTS IN PI-PLUS PROTON FILM BETWEEN 1.3 GEV/C AND 1.85 GEV/C. R. W. BIRGE AND G. E. KALMUS.	69
FINAL-STATE	DOUBLE PERIPHERAL MODEL FOR THREE-BODY FINAL-STATE REACTIONS. E. L. BERGER.	3
FINITE-ENERGY	DO FINITE-ENERGY SUM RULES IN PION PHOTOPRODUCTION PROVE THE EXISTENCE OF A PION CONSPIRACY. J. D. JACKSON AND C. QUIGG.	2
FINITE-ENERGY	FINITE-ENERGY SUM RULES AND THE PROCESS ZERO-MINUS + ZERO-MINUS GOES TO ZERO-MINUS + ZERO-MINUS. C. SCHMID AND J. YELLIN.	12
FINK	SYSTEMS PROGRAMMING. E. BEALS, W. BENSON, J. BORGES, D. BRAINARD, M. CLINNICK, W. DEMPSTER, R. FINK, R. FRIEDMAN, J. GLASNER, W. HUTCHINSON, J. JOHNSTON, J. KNIGHT, S. PENNY, D. STEVENS, AND R. TRACY.	103

FIRESTONE	DOUBLE REGGE ANALYSIS OF THE REACTION K-PLUS PROTON GOES TO K-PLUS OMEGA PROTON AT HIGH ENERGY. A. PIGNOTTI, G. ALEXANDER, A. FIRESTONE, C. FU, AND G. GOLDHABER.	6
FIRESTONE	K-PLUS PROTON INTERACTIONS AT 9 GEV/C. G. ALEXANDER, A. FIRESTONE, C. FU, G. GOLDHABER, AND D. LISSAUER.	82
FIRST-ORDER	NUMERICAL SOLUTION METHODS FOR FIRST-ORDER FREDHOLM INTEGRAL EQUATIONS. J. T. ROUTTI.	90
FLATTE	K82 EXPERIMENT. S. M. FLATTE, J. H. FRIEDMAN, A. BARBARO-GALTIERI, M. ALSTON-GARNJOST, G. R. LYNCH, M. S. RABIN, F. T. SOLMITZ, P. DAVIS, M. MATISON, N. UYEDA, AND V. WALUCH.	33
FLATTE	LRL-SLAC COSMIC-RAY EXPERIMENT. S. M. FLATTE, M. L. STEVENSON, R. DECOSTER, W. TONER, AND T. ZIPF.	38
FLATTE	PI82 EXPERIMENT. S. M. FLATTE, J. H. FRIEDMAN, A. BARBARO-GALTIERI, M. ALSTON-GARNJOST, G. R. LYNCH, M. S. RABIN, F. T. SOLMITZ, P. DAVIS, M. MATISON, N. UYEDA, AND V. WALUCH.	34
FLATTE	THE DECAY OMEGA GOES TO PI-PLUS PI-MINUS. S. M. FLATTE.	26
FLATTE	THE REACTIONS K-MINUS PROTON GOES TO ANTIK-ZERO NEUTRON AND K-MINUS PROTON GOES TO LAMBDA PI-ZERO. S. M. FLATTE, A. BARBARO-GALTIERI, R. D. TRIPP, AND C. G. WOHL.	26
FLUCTUATING	INFLUENCE OF FLUCTUATING FORCES AT ORBIT EXTREMA. B. R. PATTERSON.	20
FLUID	CAPILLARY FLUID MECHANICS.	106
FLUX	FLUX AMPLIFIER. P. EBERHARD AND R. ROSS.	38
FLUXES	EVALUATION OF FLUXES AND DOSE-EQUIVALENT RATES IN NEUTRON FIELDS AROUND HIGH-ENERGY PROTON ACCELERATORS. A. RINDI.	90
FORMULA	DERIVATION OF THE CUTKOSKY FORMULA. J. COSTER AND H. P. STAPP.	16
FOUR-PRONGED	STUDY OF K-MINUS PROTON FOUR-PRONGED REACTIONS. J. H. FRIEDMAN AND R. R. ROSS.	27
FOURTH-ORDER	FOURTH-ORDER ELECTROMAGNETIC PI-PLUS PI-ZERO MASS DIFFERENCE. I. S. GERSTEIN AND H. J. SCHNITZER.	11
FOX	ABSORPTION AND REGGE EXCHANGE. G. FOX AND G. A. RINGLAND.	4
FOX	COMPTON-SCATTERING SUM RULES. G. C. FOX AND D. Z. FREEDMAN.	12
FOX	INFINITE-MOMENTUM LIMIT. G. C. FOX.	10
FOX	MECHANISM FOR CROSS-OVER. G. FOX, R. LOGAN, AND G. A. RINGLAND.	5
FRANZ	DAPR -- FULLY AUTOMATIC EVENT SCANNING AND MEASUREMENT. B. BRITTON, J. FRANZ, W.-S. GEE, D. HALL, L. JONTULOVICH, H. WHITE, AND F. WINDORSKI.	110
FREDERICKSON	PI-MINUS HE3 INTERACTIONS. J. SPERINDE, B. M. SMITH, V. PEREZ-MENDEZ, AND D. FREDERICKSON.	63
FREDHOLM	NUMERICAL SOLUTION METHODS FOR FIRST-ORDER FREDHOLM INTEGRAL EQUATIONS. J. T. ROUTTI.	90
FREEDMAN	COMPTON-SCATTERING SUM RULES. G. C. FOX AND D. Z. FREEDMAN.	12
FRIEDMAN	EMULSION SPECTROGRAPH PROGRAM. L. W. ALVAREZ, A. H. BUFFINGTON, P. M. DAUBER, J. H. FRIEDMAN, M. ALSTON-GARNJOST, L. H. SMITH, F. T. SOLMITZ, M. L. STEVENSON, AND M. A. WAHLIG.	38
FRIEDMAN	K82 EXPERIMENT. S. M. FLATTE, J. H. FRIEDMAN, A. BARBARO-GALTIERI, M. ALSTON-GARNJOST, G. R. LYNCH, M. S. RABIN, F. T. SOLMITZ, P. DAVIS, M. MATISON, N. UYEDA, AND V. WALUCH.	33
FRIEDMAN	PI82 EXPERIMENT. S. M. FLATTE, J. H. FRIEDMAN, A. BARBARO-GALTIERI, M. ALSTON-GARNJOST, G. R. LYNCH, M. S. RABIN, F. T. SOLMITZ, P. DAVIS, M. MATISON, N. UYEDA, AND V. WALUCH.	34
FRIEDMAN	RESONANCE PRODUCTION IN K-MINUS PROTON GOES TO SIGMA PI PI, SIGMA PI PI PI. P. EBERHARD, J. H. FRIEDMAN, M. PRIPSTEIN, AND R. R. ROSS.	26
FRIEDMAN	SEARCH FOR T VIOLATION IN INELASTIC ELECTRON-PROTON SCATTERING. O. CHAMBERLAIN, G. SHAPIRO, H. WEISBERG, P. ROBRISH, S. ROCK, S. SHANNON, R. TAYLOR, L. MO, E. BLOOM, J. LITT, H. KENDALL, AND J. FRIEDMAN.	76
FRIEDMAN	STUDY OF K-MINUS PROTON FOUR-PRONGED REACTIONS. J. H. FRIEDMAN AND R. R. ROSS.	27
FRIEDMAN	SYSTEMS PROGRAMMING. E. BEALS, W. BENSON, J. BORGES, D. BRAINARD, M. CLINNICK, W. DEMPSTER, R. FINK, R. FRIEDMAN, J. GLASNER, W. HUTCHINSON, J. JOHNSTON, J. KNIGHT, S. PENNY, D. STEVENS, AND R. TRACY.	103
FRIEDMAN	THE REACTION K-MINUS PROTON GOES TO K*1/2(892)N*3/2(1238). J. H. FRIEDMAN AND R. R. ROSS.	27

FRISCH	NEUTRAL LEPTONIC CURRENTS. A. R. CLARK, T. ELIOFF, R. C. FIELD, H. J. FRISCH, R. P. JOHNSON, D. KEEFE, L. T. KERTH, M. H. KRIEGER, D. NEWTON, AND W. A. WENZEL.	57
FU	DOUBLE REGGE ANALYSIS OF THE REACTION K-PLUS PROTON GOES TO K-PLUS OMEGA PROTON AT HIGH ENERGY. A. PIGNOTTI, G. ALEXANDER, A. FIRESTONE, C. FU, AND G. GOLDHABER.	6
FU	K-PLUS PROTON INTERACTIONS AT 9 GEV/C. G. ALEXANDER, A. FIRESTONE, C. FU, G. GOLDHABER, AND D. LISSAUER.	82
FUZESY	POLARIZATION IN BACKWARD NEUTRON-PROTON SCATTERING AT 3 GEV TO 6 GEV. P. ROBRISH, O. CHAMBERLAIN, R. D. FIELD, JR., R. Z. FUZESY, M. J. LONGO, C. MOREHOUSE, T. POWELL, S. ROCK, S. SHANNON, G. SHAPIRO, AND H. WEISBERG.	77
G	CALCULATION OF THE LAMBDA-K-NUCLEON AND SIGMA-K-NUCLEON COUPLING CONSTANTS G USING KAON-NUCLEON DISPERSION RELATIONS. T. W. ROGERS.	13
GAGE	ANTIPROTON-PROTON INTERACTIONS. R. BURNS, P. CONDON, M. MANDELKERN, J. SCHULTZ, W. CHINOWSKY, AND W. R. GAGE.	75
GAGE	LOW-ENERGY PI-MINUS PROTON INTERACTIONS. W. CHINOWSKY, W. R. GAGE, J. H. MULVEY, AND D. H. SAXON.	75
GAGE	NUCLEON-NUCLEON INTERACTIONS. W. CHINOWSKY AND W. R. GAGE.	75
GAMMA	MEASUREMENT OF NEUTRON PROTON GOES TO GAMMA DEUTERON ANGULAR DISTRIBUTION AS A DIRECT TEST OF TIME REVERSAL IN THE ELECTROMAGNETIC INTERACTION. D. CHENG, V. PEREZ-MENDEZ, J. M. SPERINDE, J. A. HELLAND, B. L. SCHROCK, R. P. HADDOCK, J. DETOEUF, M. J. LONGO, S. WILSON, AND K. K. YOUNG.	63
GAMMA	MEASUREMENT OF THE DIFFERENTIAL CROSS SECTION FOR PI-MINUS PROTON GOES TO NEUTRON GAMMA BETWEEN 500-MEV AND 1200-MEV PION ENERGIES. K. M. CROWE, A. FAINBERG, A. S. L. PARSONS, P. TRUOEL, R. P. HADDOCK, B. M. K. NEFKENS, L. J. VERHEY, A. WEISS, AND M. E. ZELLER.	50
GAMMA	MEASUREMENT OF THE DIFFERENTIAL CROSS SECTION FOR PI-MINUS PROTON GOES TO NEUTRON GAMMA AT 200 MEV, 320 MEV, AND 370 MEV. A. S. L. PARSONS, P. TRUOEL, P. BERARDO, R. P. HADDOCK, J. A. HELLAND, B. M. K. NEFKENS, L. VERHEY, AND M. E. ZELLER.	47
GAPOSCHKIN	LAMBDA-ZERO PROTON INTERACTIONS. G. ALEXANDER, P. GAPOSCHKIN, J. A. KADYK, AND G. H. TRILLING.	82
GASIOROWICZ	PHENOMENOLOGICAL LAGRANGIAN FOR HADRONS. S. GASIOROWICZ.	13
GAULD	KE4 EXPERIMENT. B. GAULD, V. PEREZ-MENDEZ, R. J. CENCE, B. D. JONES, R. MORGADO, V. Z. PETERSON, AND L. SHIRAISHI.	60
GEE	DAPR -- FULLY AUTOMATIC EVENT SCANNING AND MEASUREMENT. B. BRITTON, J. FRANZ, W.-S. GEE, D. HALL, L. JONTULOVICH, H. WHITE, AND F. WINDORSKI.	110
GEE	HAZE -- SEMIAUTOMATIC EVENT MEASUREMENT. P. DAVIS, W.-S. GEE, AND L. SHALZ.	109
GELLERT	NONSTRANGE INTERACTIONS IN PROTON-PROTON COLLISIONS AT 6.6 GEV/C. E. GELLERT AND G. A. SMITH.	32
GEOMAGNETICALLY	LOW-ALTITUDE GEOMAGNETICALLY TRAPPED PROTONS. H. H. HECKMAN.	53
GEOMETRY	FCF -- GEOMETRY, KINEMATICAL ANALYSIS, DATA DISPLAY. M. BLOCK, S. BUCKMAN, D. CHRISLER, V. MORGAN, AND F. WINDORSKI.	110
GERSHWIN	SIGMA INTERACTIONS AND DECAYS. L. K. GERSHWIN.	28
GERSHWIN	SIGMA-PLUS MAGNETIC MOMENT. T. S. MAST AND L. K. GERSHWIN.	29
GERSTEIN	FOURTH-ORDER ELECTROMAGNETIC PI-PLUS PI-ZERO MASS DIFFERENCE. I. S. GERSTEIN AND H. J. SCHNITZER.	11
GEY	APPLICATIONS PROGRAMMING FOR MOYER-HELMHOLZ GROUP. F. GEY, R. HINKINS, AND L. WILSON.	96
GIDAL	PI-PLUS PROTON INTERACTIONS BETWEEN 2.9 GEV/C AND 4.1 GEV/C. G. GIDAL, R. BIRGE, G. BORREANI, D. BROWN, AND F. LOTT.	68
GLASNER	SYSTEMS PROGRAMMING. E. BEALS, W. BENSON, J. BORGES, D. BRAINARD, M. CLINNICK, W. DEMPSTER, R. FINK, R. FRIEDMAN, J. GLASNER, W. HUTCHINSON, J. JOHNSTON, J. KNIGHT, S. PENNY, D. STEVENS, AND R. TRACY.	103
GOLDHABER	DOUBLE REGGE ANALYSIS OF THE REACTION K-PLUS PROTON GOES TO K-PLUS OMEGA PROTON AT HIGH ENERGY. A. PIGNOTTI, G. ALEXANDER, A. FIRESTONE, C. FU, AND G. GOLDHABER.	6
GOLDHABER	K-PLUS DEUTERON INTERACTIONS FROM 860 MEV/C TO 1580 MEV/C. R. W. BLAND, A. A. HIRATA, G. GOLDHABER, V. H. SEEGER, G. H. TRILLING, AND C. G. WOHL.	81
GOLDHABER	K-PLUS PROTON INTERACTIONS AT 9 GEV/C. G. ALEXANDER, A. FIRESTONE, C. FU, G. GOLDHABER, AND D. LISSAUER.	82
GOLSHANI	IONIZATION OF A HEAVILY IONIZED ATOM BY ELECTRON IMPACT. M. GOLSHANI.	20

GORN	POLARIZATION IN PI-PLUS PROTON AND PI-MINUS PROTON ELASTIC SCATTERING FROM 250 MEV TO 410 MEV. W. GORN, C. MOREHOUSE, T. POWELL, P. ROBRISH, S. ROCK, S. SHANNON, H. STEINER, AND H. WEISBERG.	76
GORN	POLARIZED-PROTON TARGET IMPROVEMENTS. O. CHAMBERLAIN, W. GORN, C. MOREHOUSE, T. POWELL, P. ROBRISH, S. ROCK, S. SHANNON, G. SHAPIRO, AND H. WEISBERG.	77
GREENBERG	COMPARISON OF THE LIFETIMES OF POSITIVE AND NEGATIVE PIONS. D. S. AYERS, D. O. CALDWELL, A. M. CORMACK, V. B. ELINGS, A. J. GREENBERG, W. P. HESSE, R. W. KENNEY, AND R. J. MORRISON.	60
GREENBERGER	THE EQUIVALENCE PRINCIPLE AND DYNAMICS. D. GREENBERGER.	21
GREINER	PARTICLE IDENTIFIER. D. GREINER, R. ALBERT, AND H. H. HECKMAN.	53
GRIN	PIONIC ATOMS. R. KUNSELMAN AND G. A. GRIN.	74
GRODSKY	REGGEIZED EXTERNAL LINES. I. T. GRODSKY.	8
GROUP A	DATA-ANALYSIS PROGRAMS, GROUP A.	42
GROUP A	DATA-EDITING PROGRAMS, GROUP A.	42
GROUP A	GROUP A PROGRAMMING EFFORT. B. PARDOE.	41
GROUP A	GROUP A PROGRAMMING NOTES WRITTEN DURING THIS PERIOD.	43
GROUP A	LIBRARY-FUNCTION PROGRAMS, GROUP A.	42
GROUP A	PUBLICATIONS -- GROUP A.	44
GROUP A	SPARK-CHAMBER PROGRAMS, GROUP A.	43
GROUP A	SPIRAL-READER PROGRAMS, GROUP A.	42
GROUP A	SUPPORT PROGRAMS, GROUP A.	43
GROVE	WIRE SPARK CHAMBERS AND ELECTRONIC READOUTS. R. L. GROVE, G. L. STOKER, AND V. PEREZ-MENDEZ.	63
HAAG-RUELLE	WEAK ASYMPTOTIC CAUSALITY OF THE HAAG-RUELLE S MATRIX. D. N. WILLIAMS.	17
HADDOCK	MEASUREMENT OF NEUTRON PROTON GOES TO GAMMA DEUTERON ANGULAR DISTRIBUTION AS A DIRECT TEST OF TIME REVERSAL IN THE ELECTROMAGNETIC INTERACTION. D. CHENG, V. PEREZ-MENDEZ, J. M. SPERINDE, J. A. HELLAND, B. L. SCHROCK, R. P. HADDOCK, J. DETOEUF, M. J. LONGO, S. WILSON, AND K. K. YOUNG.	63
HADDOCK	MEASUREMENT OF THE DIFFERENTIAL CROSS SECTION FOR PI-MINUS PROTON GOES TO NEUTRON GAMMA BETWEEN 500-MEV AND 1200-MEV PION ENERGIES. K. M. CROWE, A. FAINBERG, A. S. L. PARSONS, P. TRUOEL, R. P. HADDOCK, B. M. K. NEFKENS, L. J. VERHEY, A. WEISS, AND M. E. ZELLER.	50
HADDOCK	MEASUREMENT OF THE DIFFERENTIAL CROSS SECTION FOR PI-MINUS PROTON GOES TO NEUTRON GAMMA AT 200 MEV, 320 MEV, AND 370 MEV. A. S. L. PARSONS, P. TRUOEL, P. BERARDO, R. P. HADDOCK, J. A. HELLAND, B. M. K. NEFKENS, L. VERHEY, AND M. E. ZELLER.	47
HADRONS	PHENOMENOLOGICAL LAGRANGIAN FOR HADRONS. S. GASIOROWICZ.	13
HALL	APPLICATIONS PROGRAMMING FOR TRILLING-GOLDHABER GROUP. R. AHLSTRAND, D. ARMSTRONG, E. BURNS, B. HALL, D. LAMB, AND J. MILLER.	94
HALL	DAPR -- FULLY AUTOMATIC EVENT SCANNING AND MEASUREMENT. B. BRITTON, J. FRANZ, W.-S. GEE, D. HALL, L. JONTULOVICH, H. WHITE, AND F. WINDORSKI.	110
HALPERN	THEORIES AT INFINITE MOMENTUM. K. BARDAKCI AND M. B. HALPERN.	10
HANERFELD	RESEARCH IN MATHEMATICS AND COMPUTER SCIENCE. W. BENSON, P. CONCUS, H. HANERFELD, D. JENSON, L. MEISSNER, G. NOONEY, AND L. VARDAS.	105
HARRELL	BIOMEDICAL PROGRAMMING. D. BASINGER, D. HARRELL, C. HERRIN, R. HINKINS, W. HOGAN, H. HOLMES, M. HOROVITZ, T. MAHAN, E. SCHROEDER, M. SIMMONS, AND K. WILEY.	100
HARRELL	MISCELLANEOUS PROGRAMMING. R. BELSHE, D. HARRELL, M. SIMMONS, K. WILEY, AND E. WILLIAMS.	103
HARRISON	ACCELERATOR AND MAGNET-DESIGN PROGRAMMING. V. BRADY, B. BURKHART, E. CLOSE, J. COLONIAS, N. HARRISON, R. HEALEY, A. KENNEY, B. LEVINE, B. POWELL, AND S. SACKETT.	99
HARTE	CROSSING-SYMMETRIC BOOTSTRAP SOLUTION AND LARGE-ANGLE PROTON-PROTON SCATTERING. K. M. ONG AND J. HARTE.	9
HAZE	HAZE -- SEMIAUTOMATIC EVENT MEASUREMENT. P. DAVIS, W.-S. GEE, AND L. SHALZ.	109
HEALEY	ACCELERATOR AND MAGNET-DESIGN PROGRAMMING. V. BRADY, B. BURKHART, E. CLOSE, J. COLONIAS, N. HARRISON, R. HEALEY, A. KENNEY, B. LEVINE, B. POWELL, AND S. SACKETT.	99
HEAVILY	IONIZATION OF A HEAVILY IONIZED ATOM BY ELECTRON IMPACT. M. GOLSHANI.	20
HECKMAN	FUNDAMENTAL STUDIES OF TRACK FORMATION IN SOLIDS. H. H. HECKMAN AND R. M. WALKER.	54

HECKMAN	HIGH-ENERGY NEUTRON SPECTRUM MEASUREMENTS. H. H. HECKMAN AND H. W. PATTERSON.	54
HECKMAN	LOW-ALTITUDE GEOMAGNETICALLY TRAPPED PROTONS. H. H. HECKMAN.	53
HECKMAN	PARTICLE IDENTIFIER. D. GREINER, R. ALBERT, AND H. H. HECKMAN.	53
HECKMAN	PUBLICATIONS -- HECKMAN.	55
HECKMAN	STOPPING-POWER DIFFERENCES OF CHARGED PIONS IN EMULSION. H. H. HECKMAN.	54
HELICITY	CROSSING MATRIX FOR THE HELICITY AMPLITUDES OF A + B → 1 + 2 + 3. C. K. CHEN AND K.-H. WANG.	16
HELIUM	ANALYSIS OF PION-HELIUM SCATTERING FOR THE PION ELECTROMAGNETIC FORM FACTOR. C. T. MOTTERSHEAD.	15
HELLAND	MEASUREMENT OF NEUTRON PROTON GOES TO GAMMA DEUTERON ANGULAR DISTRIBUTION AS A DIRECT TEST OF TIME REVERSAL IN THE ELECTROMAGNETIC INTERACTION. D. CHENG, V. PEREZ-MENDEZ, J. M. SPERINDE, J. A. HELLAND, B. L. SCHROCK, R. P. HADDOCK, J. DETOEUF, M. J. LONGO, S. WILSON, AND K. K. YOUNG.	63
HELLAND	MEASUREMENT OF THE DIFFERENTIAL CROSS SECTION FOR PI-MINUS PROTON GOES TO NEUTRON GAMMA AT 200 MEV, 320 MEV, AND 370 MEV. A. S. L. PARSONS, P. TRUDEL, P. BERARDO, R. P. HADDOCK, J. A. HELLAND, B. M. K. NEFKENS, L. VERHEY, AND M. E. ZELLER.	47
HELMHOLZ	K-ZERO L GOES TO 2 PI-ZERO. A. C. HELMHOLZ, R. W. KENNEY, I. R. LINSCOTT, B. J. MOYER, W. P. OLIVER, S. I. PARKER, C. A. REY, R. J. CENCE, B. D. JONES, V. Z. PETERSON, V. J. STENGER, AND J. WILSON.	61
HERNDON	LRL-SLAC EXPERIMENT ON PI-MINUS PROTON INELASTIC REACTIONS. B. DELER, L. R. PRICE, A. H. ROSENFELD, P. SODING, D. HERNDON, R. LONGACRE, D. LEITH, A. BRODY, AND B. SHEN.	33
HERRIN	BIOMEDICAL PROGRAMMING. D. BASINGER, D. HARRELL, C. HERRIN, R. HINKINS, W. HOGAN, H. HOLMES, M. HOROVITZ, T. MAHAN, E. SCHROEDER, M. SIMMONS, AND K. WILEY.	100
HESSE	COMPARISON OF THE LIFETIMES OF POSITIVE AND NEGATIVE PIONS. D. S. AYERS, D. O. CALDWELL, A. M. CORMACK, V. B. ELINGS, A. J. GREENBERG, W. P. HESSE, R. W. KENNEY, AND R. J. MORRISON.	60
HE3	PI-MINUS HE3 INTERACTIONS. J. SPERINDE, B. M. SMITH, V. PEREZ-MENDEZ, AND D. FREDERICKSON.	63
HIGH-ALTITUDE	HIGH-ALTITUDE PARTICLE PHYSICS AND COSMIC-RAY EXPERIMENTAL FACILITY. L. W. ALVAREZ, J. A. ANDERSON, A. H. BUFFINGTON, P. M. DAUBER, L. J. LLOYD, L. H. SMITH, AND M. A. WAHLIG.	36
HIGH-ENERGY	EVALUATION OF FLUXES AND DOSE-EQUIVALENT RATES IN NEUTRON FIELDS AROUND HIGH-ENERGY PROTON ACCELERATORS. A. RINDI.	90
HIGH-ENERGY	HIGH-ENERGY NEUTRON SPECTRUM MEASUREMENTS. H. H. HECKMAN AND H. W. PATTERSON.	54
HILDEBRAND	RARE DECAYS OF CHARGED K MESONS. R. HILDEBRAND, R. STIENING, AND C. WIEGAND.	73
HINKINS	APPLICATIONS PROGRAMMING FOR MOYER-HELMHOLZ GROUP. F. GEY, R. HINKINS, AND L. WILSON.	96
HINKINS	BIOMEDICAL PROGRAMMING. D. BASINGER, D. HARRELL, C. HERRIN, R. HINKINS, W. HOGAN, H. HOLMES, M. HOROVITZ, T. MAHAN, E. SCHROEDER, M. SIMMONS, AND K. WILEY.	100
HIRATA	K-PLUS DEUTERON INTERACTIONS FROM 860 MEV/C TO 1580 MEV/C. R. W. BLAND, A. A. HIRATA, G. GOLDHABER, V. H. SEEGER, G. H. TRILLING, AND C. G. WOHL.	81
HOCH	PI-PLUS DEUTERON INTERACTIONS FROM 2.8 GEV/C TO 4.2 GEV/C. M. A. ABOLINS, O. I. DAHL, AND P. HOCH.	30
HOEDEMAKER	DATA-REDUCTION OPERATIONS. E. H. HOEDEMAKER.	38
HOGAN	BIOMEDICAL PROGRAMMING. D. BASINGER, D. HARRELL, C. HERRIN, R. HINKINS, W. HOGAN, H. HOLMES, M. HOROVITZ, T. MAHAN, E. SCHROEDER, M. SIMMONS, AND K. WILEY.	100
HOLMES	BIOMEDICAL PROGRAMMING. D. BASINGER, D. HARRELL, C. HERRIN, R. HINKINS, W. HOGAN, H. HOLMES, M. HOROVITZ, T. MAHAN, E. SCHROEDER, M. SIMMONS, AND K. WILEY.	100
HOROVITZ	BIOMEDICAL PROGRAMMING. D. BASINGER, D. HARRELL, C. HERRIN, R. HINKINS, W. HOGAN, H. HOLMES, M. HOROVITZ, T. MAHAN, E. SCHROEDER, M. SIMMONS, AND K. WILEY.	100
HUTCHINSON	SYSTEMS PROGRAMMING. E. BEALS, W. BENSON, J. BORGES, D. BRAINARD, M. CLINNICK, W. DEMPSTER, R. FINK, R. FRIEDMAN, J. GLASNER, W. HUTCHINSON, J. JOHNSTON, J. KNIGHT, S. PENNY, D. STEVENS, AND R. TRACY.	103
HWA	EXPLORATION FOR S-MATRIX DYNAMICS. R. C. HWA.	8

HYDROGEN	ANTIPROTON INTERACTIONS IN HYDROGEN AND DEUTERIUM. M. A. ABOLINS, A. RITTENBERG, AND G. A. SMITH.	31
HYDROGEN	25-INCH HYDROGEN BUBBLE CHAMBER. W. M. POWELL, J. A. KADYK, AND G. J. ECKMAN.	87
HYPERON	HYPERON PRODUCTION AND DECAY. F. S. CRAWFORD, JR. AND J. C. DOYLE.	25
HYPERONIC	OBSERVATION OF DELTA-MINUS HYPERONIC ATOMS. C. WIEGAND.	73
HYPERONS	PRODUCTION AND DECAY OF CASCADE HYPERONS. P. M. DAUBER AND R. MULLER.	25
I=1	AN I=1 PION-PION SUM RULE AND THE DERIVATIVE OF THE S-WAVE AMPLITUDES. S. Y. CHU AND B. R. DESAI.	12
IAGOLNITZER	MACROSCOPIC CAUSALITY AND ANALYTICITY PROPERTIES OF THE S MATRIX. D. IAGOLNITZER AND H. P. STAPP.	17
IDENTIFIER	PARTICLE IDENTIFIER. D. GREINER, R. ALBERT, AND H. H. HECKMAN.	53
IMPLICATIONS	SOME IMPLICATIONS OF A NEW SOURCE OF COSMIC-RAY MUONS. S. PAKVASA.	21
INCIDENT	WHY THE TOTAL NUCLEON-ANTINUCLEON CROSS SECTION IS LARGER THAN THE TOTAL NUCLEON-NUCLEON CROSS SECTION AT NONASYMPTOTIC INCIDENT ENERGY. P. D. TING.	7
INDEFINITELY	A MODEL OF INDEFINITELY RISING TRAJECTORIES. S.-Y. CHU, C.-I. TAN, AND P. D. TING.	4
INELASTIC	LRL-SLAC EXPERIMENT ON PI-MINUS PROTON INELASTIC REACTIONS. B. DELER, L. R. PRICE, A. H. ROSENFELD, P. SODING, D. HERNDON, R. LONGACRE, D. LEITH, A. BRODY, AND B. SHEN.	33
INELASTIC	SEARCH FOR T VIOLATION IN INELASTIC ELECTRON-PROTON SCATTERING. O. CHAMBERLAIN, G. SHAPIRO, H. WEISBERG, P. ROBRISH, S. ROCK, S. SHANNON, R. TAYLOR, L. MO, E. BLOOM, J. LITT, H. KENDALL, AND J. FRIEDMAN.	76
INFINITE-MOMENTUM	INFINITE-MOMENTUM LIMIT. G. C. FOX.	10
INSTABILITY	QUASILINEAR EVOLUTION OF THE WEIBEL-KAHN INSTABILITY. N. ALBRIGHT.	20
INSTRUMENTATION	BIOMEDICAL INSTRUMENTATION PROGRAMMING.	100
INTEGRAL	NUMERICAL SOLUTION METHODS FOR FIRST-ORDER FREDHOLM INTEGRAL EQUATIONS. J. T. ROUTTI.	90
INTEGRALS	VARIATIONAL PRINCIPLES FOR INTEGRALS. C. SCHWARTZ.	21
INTERACTIVE	INTERACTIVE TIME-SHARING SYSTEM.	105
IONIZATION	IONIZATION OF A HEAVILY IONIZED ATOM BY ELECTRON IMPACT. M. GOLSHANI.	20
IONIZED	IONIZATION OF A HEAVILY IONIZED ATOM BY ELECTRON IMPACT. M. GOLSHANI.	20
IONS	RANGES AND STOPPING POWER OF HEAVY IONS IN NONGASEOUS MEDIA. R. W. WALLACE.	91
IONS	REARRANGEMENT COLLISIONS BETWEEN SLOW ATOMS AND IONS. J. C. CHEN AND K. M. WATSON.	20
ITZKOWITZ	NUCLEAR CHEMISTRY PROGRAMMING. N. BROWN, P. COLLOM, M. ITZKOWITZ, G. LITTON, E. QUIGG, C. RUGGE, AND E. SCHROEDER.	97
JACKSON	DECAYS OF NEUTRAL PSEUDOSCALAR MESONS INTO LEPTON PAIRS. C. QUIGG AND J. D. JACKSON.	14
JACKSON	DO FINITE-ENERGY SUM RULES IN PION PHOTOPRODUCTION PROVE THE EXISTENCE OF A PION CONSPIRACY. J. D. JACKSON AND C. QUIGG.	2
JENSON	RESEARCH IN MATHEMATICS AND COMPUTER SCIENCE. W. BENSON, P. CONCUS, H. HANERFELD, D. JENSON, L. MEISSNER, G. NOONEY, AND L. VARDAS.	105
JEW	K-MINUS DEUTERON AND K-MINUS NEUTRON ELASTIC SCATTERING. G. E. KALMUS AND N. JEW.	67
JOB-SCHEDULING	SHOP AND ENGINEER JOB-SCHEDULING PROGRAM SHUFL.	103
JOHNSON	NEUTRAL LEPTONIC CURRENTS. A. R. CLARK, T. ELIOFF, R. C. FIELD, H. J. FRISCH, R. P. JOHNSON, D. KEEFE, L. T. KERTH, M. H. KRIEGER, D. NEWTON, AND W. A. WENZEL.	57
JOHNSTON	SYSTEMS PROGRAMMING. E. BEALS, W. BENSON, J. BORGES, D. BRAINARD, M. CLINNICK, W. DEMPSTER, R. FINK, R. FRIEDMAN, J. GLASNER, W. HUTCHINSON, J. JOHNSTON, J. KNIGHT, S. PENNY, D. STEVENS, AND R. TRACY.	103
JONES	K-ZERO L GOES TO 2 PI-ZERO. A. C. HELMHOLZ, R. W. KENNEY, I. R. LINSCOTT, B. J. MOYER, W. P. OLIVER, S. I. PARKER, C. A. REY, R. J. CENCE, B. D. JONES, V. Z. PETERSON, V. J. STENGER, AND J. WILSON.	61
JONES	KE4 EXPERIMENT. B. GAULD, V. PEREZ-MENDEZ, R. J. CENCE, B. D. JONES, R. MORGADO, V. Z. PETERSON, AND L. SHIRAISHI.	60
JONTULOVICH	DAPR -- FULLY AUTOMATIC EVENT SCANNING AND MEASUREMENT. B. BRITTON, J. FRANZ, W.-S. GEE, D. HALL, L. JONTULOVICH, H. WHITE, AND F. WINDORSKI.	110

K MESONS	RARE DECAYS OF CHARGED K MESONS. R. HILDEBRAND, R. STIENING, AND C. WIEGAND.	73
K-MINUS	K-MINUS DEUTERON AND K-MINUS NEUTRON ELASTIC SCATTERING. G. E. KALMUS AND N. JEW.	67
K-MINUS	K-MINUS INTERACTIONS IN DEUTERIUM. A. BARBARO-GALTIERI, M. MATISON, AND A. RITTENBERG.	27
K-MINUS	K-MINUS MESIC ATOMS. C. WIEGAND AND R. KUNSELMAN.	73
K-MINUS	K-MINUS PROTON GOES TO LAMBDA PI-ZERO. J. LOUIE.	67
K-MINUS	K-MINUS PROTON GOES TO LAMBDA PI-PLUS PI-MINUS AND K-MINUS PROTON GOES TO LAMBDA + MISSING MASS. T. S. MAST, A. BARBARO-GALTIERI, AND R. D. TRIPP.	29
K-MINUS	K-MINUS PROTON INTERACTIONS AROUND 1 GEV/C AND THE Y*0(1815). J. SAHOURIA.	67
K-MINUS	RESONANCE PRODUCTION IN K-MINUS PROTON GOES TO SIGMA PI PI, SIGMA PI PI PI. P. EBERHARD, J. H. FRIEDMAN, M. PRIPSTEIN, AND R. R. ROSS.	26
K-MINUS	STUDY OF K-MINUS PROTON FOUR-PRONGED REACTIONS. J. H. FRIEDMAN AND R. R. ROSS.	27
K-MINUS	THE REACTION K-MINUS PROTON GOES TO K*1/2(892)N*3/2(1238). J. H. FRIEDMAN AND R. R. ROSS.	27
K-MINUS	THE REACTIONS K-MINUS PROTON GOES TO ANTIK-ZERO NEUTRON AND K-MINUS PROTON GOES TO LAMBDA PI-ZERO. S. M. FLATTE, A. BARBARO-GALTIERI, R. D. TRIPP, AND C. G. WOHL.	26
K-PLUS	DOUBLE REGGE ANALYSIS OF THE REACTION K-PLUS PROTON GOES TO K-PLUS OMEGA PROTON AT HIGH ENERGY. A. PIGNOTTI, G. ALEXANDER, A. FIRESTONE, C. FU, AND G. GOLDHABER.	6
K-PLUS	EVIDENCE FOR EXCHANGE OF THE RHO AND A2 REGGE POLES IN THE REACTIONS PI-PLUS PROTON GOES TO PI-ZERO DELTA-PLUSPLUS, PI-PLUS PROTON GOES TO ETA-ZERO DELTA-PLUSPLUS, AND K-PLUS PROTON GOES TO K-ZERO DELTA-PLUSPLUS. R. MATHEWS.	5
K-PLUS	K-PLUS DEUTERON INTERACTIONS FROM 860 MEV/C TO 1580 MEV/C. R. W. BLAND, A. A. HIRATA, G. GOLDHABER, V. H. SEEGER, G. H. TRILLING, AND C. G. WOHL.	81
K-PLUS	K-PLUS PROTON INTERACTIONS AT 9 GEV/C. G. ALEXANDER, A. FIRESTONE, C. FU, G. GOLDHABER, AND D. LISSAUER.	82
K-ZERO	EVIDENCE FOR EXCHANGE OF THE RHO AND A2 REGGE POLES IN THE REACTIONS PI-PLUS PROTON GOES TO PI-ZERO DELTA-PLUSPLUS, PI-PLUS PROTON GOES TO ETA-ZERO DELTA-PLUSPLUS, AND K-PLUS PROTON GOES TO K-ZERO DELTA-PLUSPLUS. R. MATHEWS.	5
K-ZERO L	K-ZERO L GOES TO 2 PI-ZERO. A. C. HELMHOLZ, R. W. KENNEY, I. R. LINSCOTT, B. J. MOYER, W. P. OLIVER, S. I. PARKER, C. A. REY, R. J. CENCE, B. D. JONES, V. Z. PETERSON, V. J. STENGER, AND J. WILSON.	61
K-ZERO-MU3	K-ZERO-MU3 CHARGE ASYMMETRY. D. H. MILLER, R. J. BUDNITZ, W. N. ROSS, R. L. MCCARTHY, AND J. H. BREWER.	49
K-ZERO-2	K-ZERO-2 CHARGE ASYMMETRY. D. H. MILLER AND M. A. PACIOTTI.	48
KADYK	ANTIK PROTON GOES TO LAMBDA PI INTERACTIONS AT LOW ENERGY. J. H. CHAN AND J. A. KADYK.	82
KADYK	LAMBDA-ZERO PROTON INTERACTIONS. G. ALEXANDER, P. GAPOSCHKIN, J. A. KADYK, AND G. H. TRILLING.	82
KADYK	25-INCH HYDROGEN BUBBLE CHAMBER. W. M. POWELL, J. A. KADYK, AND G. J. ECKMAN.	87
KALMUS	K-MINUS DEUTERON AND K-MINUS NEUTRON ELASTIC SCATTERING. G. E. KALMUS AND N. JEW.	67
KALMUS	STUDY OF THE STRANGE-PARTICLE CHANNELS IN PI-PLUS PROTON BETWEEN 1.3 GEV/C AND 1.65 GEV/C. G. BORREANI, G. KALMUS, AND J. LOUIE.	68
KALMUS	TWO-PRONG EVENTS IN PI-PLUS PROTON FILM BETWEEN 1.3 GEV/C AND 1.85 GEV/C. R. W. BIRGE AND G. E. KALMUS.	69
KANSTEIN	MODEL OF RADIO-FREQUENCY SYSTEM FOR IMPROVEMENT OF 184-INCH CYCLOTRON. L. KANSTEIN.	130
KAON	CALCULATION OF THE LAMBDA-K-NUCLEON AND SIGMA-K-NUCLEON COUPLING CONSTANTS G USING KAON NUCLEON DISPERSION RELATIONS. T. W. ROGERS.	13
KAPLAN	PARTIAL CAPTURE RATES OF MUONS BY OXYGEN-16 LEADING TO EXCITED NUCLEAR STATES OF NITROGEN-15. S. N. KAPLAN, R. V. PYLE, L. E. TEMPLE, AND G. F. VALBY.	59
KAUFMAN	PHOTOPRODUCTION OF VECTOR MESONS AT SLAC. L. KAUFMAN, V. PEREZ-MENDEZ, A. W. STETZ, S. H. WILLIAMS, F. BULOS, R. DIEBOLD, R. LARSEN, D. LEITH, B. F. RICHTER, AND W. BUSZA.	62
KAUFMAN	SPARK CHAMBERS FOR THE MEDICAL PROGRAM. L. KAUFMAN, V. PEREZ-MENDEZ, J. SPERINDE, A. RINDI, AND H. WOLLENBERG.	64

KEEFE	NEUTRAL LEPTONIC CURRENTS. A. R. CLARK, T. ELIOFF, R. C. FIELD, H. J. FRISCH, R. P. JOHNSON, D. KEEFE, L. T. KERTH, M. H. KRIEGER, D. NEWTON, AND W. A. WENZEL.	57
KENDALL	SEARCH FOR T VIOLATION IN INELASTIC ELECTRON-PROTON SCATTERING. O. CHAMBERLAIN, G. SHAPIRO, H. WEISBERG, P. ROBRISH, S. ROCK, S. SHANNON, R. TAYLOR, L. MO, E. BLOOM, J. LITT, H. KENDALL, AND J. FRIEDMAN.	76
KENNEY	ACCELERATOR AND MAGNET-DESIGN PROGRAMMING. V. BRADY, B. BURKHART, E. CLOSE, J. COLONIAS, N. HARRISON, R. HEALEY, A. KENNEY, B. LEVINE, B. POWELL, AND S. SACKETT.	99
KENNEY	COMPARISON OF THE LIFETIMES OF POSITIVE AND NEGATIVE PIONS. D. S. AYERS, D. O. CALDWELL, A. M. CORMACK, V. B. ELINGS, A. J. GREENBERG, W. P. HESSE, R. W. KENNEY, AND R. J. MORRISON.	60
KENNEY	ETA-ZERO DECAY AND PI-ZERO PI-ZERO NEUTRON EXPERIMENTS. R. CHAFFEE, O. DAHL, R. W. KENNEY, J. NELSON, M. PRIPSTEIN, T. B. RISSER, A. SKUJA, AND M. A. WAHLIG.	59
KENNEY	K-ZERO L GOES TO 2 PI-ZERO. A. C. HELMHOLZ, R. W. KENNEY, I. R. LINSCOTT, B. J. MOYER, W. P. OLIVER, S. I. PARKER, C. A. REY, R. J. CENCE, B. D. JONES, V. Z. PETERSON, V. J. STENGER, AND J. WILSON.	61
KERTH	DIBOSON PRODUCTION BY 2-GEV/C PIONS. A. R. CLARK, B. CORK, T. ELIOFF, L. T. KERTH, T. N. RANGASWAMY, AND W. A. WENZEL.	57
KERTH	MEASUREMENT OF THE (K-PLUS GOES TO POSITRON NU)/(K-PLUS GOES TO MU-PLUS NU) BRANCHING RATIO. A. R. CLARK, B. CORK, T. ELIOFF, D. NEWTON, L. T. KERTH, J. F. MCREYNOLDS, AND W. A. WENZEL.	57
KERTH	NEUTRAL LEPTONIC CURRENTS. A. R. CLARK, T. ELIOFF, R. C. FIELD, H. J. FRISCH, R. P. JOHNSON, D. KEEFE, L. T. KERTH, M. H. KRIEGER, D. NEWTON, AND W. A. WENZEL.	57
KERTH	NUCLEON-NUCLEON TRIPLE SCATTERING. C. M. ANKENBRANDT, D. CHENG, L. T. KERTH, K. C. LEUNG, B. MACDONALD, AND P. T. SURKO.	58
KE4	KE4 EXPERIMENT. B. GAULD, V. PEREZ-MENDEZ, R. J. CENCE, B. D. JONES, R. MORGADO, V. Z. PETERSON, AND L. SHIRAISHI.	60
KHURI	SUMS OF DIRECT-CHANNEL REGGE-POLE CONTRIBUTIONS AND CROSSING SYMMETRY. N. N. KHURI.	2
KINEMATICAL	FCF -- GEOMETRY, KINEMATICAL ANALYSIS, DATA DISPLAY. M. BLOCK, S. BUCKMAN, D. CHRISLER, V. MORGAN, AND F. WINDORSKI.	110
KLEIN	A REGGE CLASSIFICATION OF THE BARYON RESONANCES. S. KLEIN.	5
KLEIN	BACKSCATTERED LASER BEAM AT SLAC. W. PODOLSKY, M. S. RABIN, J. J. MURRAY, P. KLEIN, AND C. K. SINCLAIR.	34
KLEIN	GENERAL PARAMETERIZATION OF REGGE RESIDUES AND TRAJECTORIES. S. KLEIN.	5
KNIGHT	SYSTEMS PROGRAMMING. E. BEALS, W. BENSON, J. BORGES, D. BRAINARD, M. CLINNICK, W. DEMPSTER, R. FINK, R. FRIEDMAN, J. GLASNER, W. HUTCHINSON, J. JOHNSTON, J. KNIGHT, S. PENNY, D. STEVENS, AND R. TRACY.	103
KRIEGER	NEUTRAL LEPTONIC CURRENTS. A. R. CLARK, T. ELIOFF, R. C. FIELD, H. J. FRISCH, R. P. JOHNSON, D. KEEFE, L. T. KERTH, M. H. KRIEGER, D. NEWTON, AND W. A. WENZEL.	57
KUNSELMAN	K-MINUS MESIC ATOMS. C. WIEGAND AND R. KUNSELMAN.	73
KUNSELMAN	PIONIC ATOMS. R. KUNSELMAN AND G. A. GRIN.	74
K82	K82 EXPERIMENT. S. M. FLATTE, J. H. FRIEDMAN, A. BARBARO-GALTIERI, M. ALSTON-GARNJOST, G. R. LYNCH, M. S. RABIN, F. T. SOLMITZ, P. DAVIS, M. MATISON, N. UYEDA, AND V. WALUCH.	33
LAGRANGIAN	PHENOMENOLOGICAL LAGRANGIAN FOR HADRONS. S. GASIOROWICZ.	13
LAMB	APPLICATIONS PROGRAMMING FOR TRILLING-GOLDHABER GROUP. R. AHLSTRAND, D. ARMSTRONG, E. BURNS, B. HALL, D. LAMB, AND J. MILLER.	94
LAMBDA	ANTIK PROTON GOES TO LAMBDA PI INTERACTIONS AT LOW ENERGY. J. H. CHAN AND J. A. KADYK.	82
LAMBDA	K-MINUS PROTON GOES TO LAMBDA PI-ZERO. J. LOUIE.	67
LAMBDA	K-MINUS PROTON GOES TO LAMBDA PI-PLUS PI-MINUS AND K-MINUS PROTON GOES TO LAMBDA + MISSING MASS. T. S. MAST, A. BARBARO-GALTIERI, AND R. D. TRIPP.	29
LAMBDA	THE REACTIONS K-MINUS PROTON GOES TO ANTIK-ZERO NEUTRON AND K-MINUS PROTON GOES TO LAMBDA PI-ZERO. S. M. FLATTE, A. BARBARO-GALTIERI, R. D. TRIPP, AND C. G. WOHL.	26
LAMBDA-K-NUCLEON	CALCULATION OF THE LAMBDA-K-NUCLEON AND SIGMA-K-NUCLEON COUPLING CONSTANTS G USING KAON-NUCLEON DISPERSION RELATIONS. T. W. ROGERS.	13

LAMBDA-ZERO	LAMBDA-ZERO PROTON INTERACTIONS. G. ALEXANDER, P. GAPOSCHKIN, J. A. KADYK, AND G. H. TRILLING.	82
LARGE-ANGLE	CROSSING-SYMMETRIC BOOTSTRAP SOLUTION AND LARGE-ANGLE PROTON-PROTON SCATTERING. K. M. ONG AND J. HARTE.	9
LARGER	WHY THE TOTAL NUCLEON-ANTINUCLEON CROSS SECTION IS LARGER THAN THE TOTAL NUCLEON-NUCLEON CROSS SECTION AT NONASYMPTOTIC INCIDENT ENERGY. P. D. TING.	7
LARSEN	PHOTOPRODUCTION OF VECTOR MESONS AT SLAC. L. KAUFMAN, V. PEREZ-MENDEZ, A. W. STETZ, S. H. WILLIAMS, F. BULOS, R. DIEBOLD, R. LARSEN, D. LEITH, B. F. RICHTER, AND W. BUSZA.	62
LASER	BACKSCATTERED LASER BEAM AT SLAC. W. PODOLSKY, M. S. RABIN, J. J. MURRAY, P. KLEIN, AND C. K. SINCLAIR.	34
LASLETT	ANALYSIS OF THE ELECTRON-RING ACCELERATOR. L. J. LASLETT AND A. M. SESSLER.	19
LEE	CONNECTION BETWEEN OCTET DOMINANCE AND EXCHANGE DEGENERACY. H. LEE.	12
LEITH	LRL-SLAC EXPERIMENT ON PI-MINUS PROTON INELASTIC REACTIONS. B. DELER, L. R. PRICE, A. H. ROSENFELD, P. SODING, D. HERNDON, R. LONGACRE, D. LEITH, A. BRODY, AND B. SHEN.	33
LEITH	PHOTOPRODUCTION OF VECTOR MESONS AT SLAC. L. KAUFMAN, V. PEREZ-MENDEZ, A. W. STETZ, S. H. WILLIAMS, F. BULOS, R. DIEBOLD, R. LARSEN, D. LEITH, B. F. RICHTER, AND W. BUSZA.	62
LEPTON	DECAYS OF NEUTRAL PSEUDOSCALAR MESONS INTO LEPTON PAIRS. C. QUIGG AND J. D. JACKSON.	14
LEPTONIC	NEUTRAL LEPTONIC CURRENTS. A. R. CLARK, T. ELIOFF, R. C. FIELD, H. J. FRISCH, R. P. JOHNSON, D. KEEFE, L. T. KERTH, M. H. KRIEGER, D. NEWTON, AND W. A. WENZEL.	57
LEUKEMIA	ETIOLOGY OF LEUKEMIA.	106
LEUNG	NUCLEON-NUCLEON TRIPLE SCATTERING. C. M. ANKENBRANDT, D. CHENG, L. T. KERTH, K. C. LEUNG, B. MACDONALD, AND P. T. SURKO.	58
LEVINE	ACCELERATOR AND MAGNET-DESIGN PROGRAMMING. V. BRADY, B. BURKHART, E. CLOSE, J. COLONIAS, N. HARRISON, R. HEALEY, A. KENNEY, B. LEVINE, B. POWELL, AND S. SACKETT.	99
LIBRARY-FUNCTION	LIBRARY-FUNCTION PROGRAMS, GROUP A.	42
LIFETIMES	COMPARISON OF THE LIFETIMES OF POSITIVE AND NEGATIVE PIONS. D. S. AYERS, D. O. CALDWELL, A. M. CORMACK, V. B. ELINGS, A. J. GREENBERG, W. P. HESSE, R. W. KENNEY, AND R. J. MORRISON.	60
LINK	ACCELERATOR LINK PROGRAM PPU.	104
LINSCOTT	K-ZERO L GOES TO 2 PI-ZERO. A. C. HELMHOLZ, R. W. KENNEY, I. R. LINSCOTT, B. J. MOYER, W. P. OLIVER, S. I. PARKER, C. A. REY, R. J. CENCE, B. D. JONES, V. Z. PETERSON, V. J. STENGER, AND J. WILSON.	61
LISSAUER	K-PLUS PROTON INTERACTIONS AT 9 GEV/C. G. ALEXANDER, A. FIRESTONE, C. FU, G. GOLDHABER, AND D. LISSAUER.	82
LITT	SEARCH FOR T VIOLATION IN INELASTIC ELECTRON-PROTON SCATTERING. O. CHAMBERLAIN, G. SHAPIRO, H. WEISBERG, P. ROBRISH, S. ROCK, S. SHANNON, R. TAYLOR, L. MO, E. BLOOM, J. LITT, H. KENDALL, AND J. FRIEDMAN.	76
LITTON	NUCLEAR CHEMISTRY PROGRAMMING. N. BROWN, P. COLLOM, M. ITZKOWITZ, G. LITTON, E. QUIGG, C. RUGGE, AND E. SCHROEDER.	97
LLOYD	HIGH-ALTITUDE PARTICLE PHYSICS AND COSMIC-RAY EXPERIMENTAL FACILITY. L. W. ALVAREZ, J. A. ANDERSON, A. H. BUFFINGTON, P. M. DAUBER, L. J. LLOYD, L. H. SMITH, AND M. A. WAHLIG.	36
LOFGREN	APPLICATIONS PROGRAMMING FOR LOFGREN PHYSICS GROUP. J. P. TYSON, L. D. WILSON, AND D. H. ZURLINDEN.	96
LOFGREN	PUBLICATIONS, ACCELERATOR STUDY -- LOFGREN.	125
LOFGREN	PUBLICATIONS, BEVATRON -- LOFGREN.	128
LOFGREN	PUBLICATIONS, PHYSICS -- LOFGREN.	58
LOGAN	MECHANISM FOR CROSS-OVER. G. FOX, R. LOGAN, AND G. A. RINGLAND.	5
LONGACRE	LRL-SLAC EXPERIMENT ON PI-MINUS PROTON INELASTIC REACTIONS. B. DELER, L. R. PRICE, A. H. ROSENFELD, P. SODING, D. HERNDON, R. LONGACRE, D. LEITH, A. BRODY, AND B. SHEN.	33
LONGO	MEASUREMENT OF NEUTRON PROTON GOES TO GAMMA DEUTERON ANGULAR DISTRIBUTION AS A DIRECT TEST OF TIME REVERSAL IN THE ELECTROMAGNETIC INTERACTION. D. CHENG, V. PEREZ-MENDEZ, J. M. SPERINDE, J. A. HELLAND, B. L. SCHROCK, R. P. HADDOCK, J. DETOEUF, M. J. LONGO, S. WILSON, AND K. K. YOUNG.	63

LONGO	POLARIZATION IN BACKWARD NEUTRON-PROTON SCATTERING AT 3 GEV TO 6 GEV. P. ROBRISH, O. CHAMBERLAIN, R. D. FIELD, JR., R. Z. FUZESY, M. J. LONGO, C. MOREHOUSE, T. POWELL, S. ROCK, S. SHANNON, G. SHAPIRO, AND H. WEISBERG.	77
LOTT	PI-PLUS PROTON INTERACTIONS BETWEEN 2.9 GEV/C AND 4.1 GEV/C. G. GIDAL, R. BIRGE, G. BORREANI, D. BROWN, AND F. LOTT.	68
LOUIE	K-MINUS PROTON GOES TO LAMBDA PI-ZERO. J. LOUIE.	67
LOUIE	STUDY OF THE STRANGE-PARTICLE CHANNELS IN PI-PLUS PROTON BETWEEN 1.3 GEV/C AND 1.65 GEV/C. G. BORREANI, G. KALMUS, AND J. LOUIE.	68
LOW-ALTITUDE	LOW-ALTITUDE GEOMAGNETICALLY TRAPPED PROTONS. H. H. HECKMAN.	53
LOW-BACKGROUND	LOW-BACKGROUND COUNTING FACILITY. A. R. SMITH AND H. A. WOLLENBERG.	89
LOW-ENERGY	LOW-ENERGY PI-MINUS PROTON INTERACTIONS. W. CHINOWSKY, W. R. GAGE, J. H. MULVEY, AND D. H. SAXON.	75
LOW-ENERGY	LOW-ENERGY THEOREMS AND THE POMERANCHUK TRAJECTORY FOR COMPTON SCATTERING. F. ARBAB AND R. C. BROWER.	14
LRL-SLAC	LRL-SLAC COSMIC-RAY EXPERIMENT. S. M. FLATTE, M. L. STEVENSON, R. DECOSTER, W. TONER, AND T. ZIPF.	38
LRL-SLAC	LRL-SLAC EXPERIMENT ON PI-MINUS PROTON INELASTIC REACTIONS. B. DELER, L. R. PRICE, A. H. ROSENFELD, P. SODING, D. HERNDON, R. LONGACRE, D. LEITH, A. BRODY, AND B. SHEN.	33
LYNCH	D66 EXPERIMENT. P. EBERHARD, G. R. LYNCH, AND M. PRIPSTEIN.	32
LYNCH	K82 EXPERIMENT. S. M. FLATTE, J. H. FRIEDMAN, A. BARBARO-GALTIERI, M. ALSTON-GARNJOST, G. R. LYNCH, M. S. RABIN, F. T. SOLMITZ, P. DAVIS, M. MATISON, N. UYEDA, AND V. WALUCH.	33
LYNCH	PI82 EXPERIMENT. S. M. FLATTE, J. H. FRIEDMAN, A. BARBARO-GALTIERI, M. ALSTON-GARNJOST, G. R. LYNCH, M. S. RABIN, F. T. SOLMITZ, P. DAVIS, M. MATISON, N. UYEDA, AND V. WALUCH.	34
MACDONALD	NUCLEON-NUCLEON TRIPLE SCATTERING. C. M. ANKENBRANDT, D. CHENG, L. T. KERTH, K. C. LEUNG, B. MACDONALD, AND P. T. SURKO.	58
MACNAUGHTON	PI-PLUS PROTON INTERACTION AT 3.7 GEV/C. W. R. BUTLER, D. G. COYNE, AND J. N. MACNAUGHTON.	81
MACRO	GENERAL-PURPOSE MACRO PROCESSOR.	105
MACROSCOPIC	MACROSCOPIC CAUSALITY AND ANALYTICITY PROPERTIES OF THE S MATRIX. D. IAGOLNITZER AND H. P. STAPP.	17
MAGNET	MAGNET DESIGN PROGRAMMING.	99
MAGNET	MAGNET TEST DATA PROGRAM.	103
MAGNET	NAL MAGNET DESIGN.	115
MAGNET-DESIGN	ACCELERATOR AND MAGNET-DESIGN PROGRAMMING. V. BRADY, B. BURKHART, E. CLOSE, J. COLONIAS, N. HARRISON, R. HEALEY, A. KENNEY, B. LEVINE, B. POWELL, AND S. SACKETT.	99
MAGNETIC	PERTURBATION THEORY FOR MAGNETIC MONOPOLES. A. RABL.	21
MAGNETIC	SIGMA-PLUS MAGNETIC MOMENT. T. S. MAST AND L. K. GERSHWIN.	29
MAHAN	BIOMEDICAL PROGRAMMING. D. BASINGER, D. HARRELL, C. HERRIN, R. HINKINS, W. HOGAN, H. HOLMES, M. HOROVITZ, T. MAHAN, E. SCHROEDER, M. SIMMONS, AND K. WILEY.	100
MANDELKERN	ANTIPROTON-PROTON INTERACTIONS. R. BURNS, P. CONDON, M. MANDELKERN, J. SCHULTZ, W. CHINOWSKY, AND W. R. GAGE.	75
MANDELSTAM	VENEZIANO-SUZUKI MODEL WITH SPIN. S. MANDELSTAM.	3
MANNING	SEARCH FOR A TWO-PI-ZERO RESONANCE NEAR 730 MEV IN PI-PLUS DEUTERON INTERACTIONS. R. J. MANNING AND G. A. SMITH.	31
MASS	FOURTH-ORDER ELECTROMAGNETIC PI-PLUS PI-ZERO MASS DIFFERENCE. I. S. GERSTEIN AND H. J. SCHNITZER.	11
MASS	K-MINUS PROTON GOES TO LAMBDA PI-PLUS PI-MINUS AND K-MINUS PROTON GOES TO LAMBDA + MISSING MASS. T. S. MAST, A. BARBARO-GALTIERI, AND R. D. TRIPP.	29
MASS	MASS STORAGE SYSTEM.	104
MASS	ZERO-MASS BOSONS IN S-MATRIX THEORY. F. ARBAB AND R. C. BROWER.	14
MASSES	ON INTERACTING LOCAL QUANTUM FIELDS DESCRIBING MANY MASSES AND SPINS. W. BIERTER AND K. M. BITAR.	15
MAST	CHARGE-EXCHANGE (K-MINUS PROTON GOES TO ANTIK-ZERO NEUTRON) AND ELASTIC (K-MINUS PROTON GOES TO K-MINUS PROTON) REACTIONS. T. S. MAST, R. BANGERTER, A. BARBARO-GALTIERI, AND R. D. TRIPP.	29
MAST	DIRECT EVIDENCE FOR THE MULTIPLET ASSIGNMENTS OF LAMBDA(1520) AND LAMBDA(1405). R. D. TRIPP, R. O. BANGERTER, A. BARBARO-GALTIERI, AND T. S. MAST.	28

MAST	K-MINUS PROTON GOES TO LAMBDA PI-PLUS PI-MINUS AND K-MINUS PROTON GOES TO LAMBDA + MISSING MASS. T. S. MAST, A. BARBARO-GALTIERI, AND R. D. TRIPP.	29
MAST	SIGMA-PLUS MAGNETIC MOMENT. T. S. MAST AND L. K. GERSHWIN.	29
MATHEMATICS	MATHEMATICS AND COMPUTING. J. A. BAKER.	93
MATHEMATICS	RESEARCH IN MATHEMATICS AND COMPUTER SCIENCE. W. BENSON, P. CONCUS, H. HANERFELD, D. JENSON, L. MEISSNER, G. NOONEY, AND L. VARDAS.	105
MATHEWS	EVIDENCE FOR EXCHANGE OF THE RHO AND A2 REGGE POLES IN THE REACTIONS PI-PLUS PROTON GOES TO PI-ZERO DELTA-PLUSPLUS, PI-PLUS PROTON GOES TO ETA-ZERO DELTA-PLUSPLUS, AND K-PLUS PROTON GOES TO K-ZERO DELTA-PLUSPLUS. R. MATHEWS.	5
MATISON	K-MINUS INTERACTIONS IN DEUTERIUM. A. BARBARO-GALTIERI, M. MATISON, AND A. RITTENBERG.	27
MATISON	K82 EXPERIMENT. S. M. FLATTE, J. H. FRIEDMAN, A. BARBARO-GALTIERI, M. ALSTON-GARNJOST, G. R. LYNCH, M. S. RABIN, F. T. SOLMITZ, P. DAVIS, M. MATISON, N. UYEDA, AND V. WALUCH.	33
MATISON	PI82 EXPERIMENT. S. M. FLATTE, J. H. FRIEDMAN, A. BARBARO-GALTIERI, M. ALSTON-GARNJOST, G. R. LYNCH, M. S. RABIN, F. T. SOLMITZ, P. DAVIS, M. MATISON, N. UYEDA, AND V. WALUCH.	34
MATRIX	CROSSING MATRIX FOR THE HELICITY AMPLITUDES OF A + B → 1 + 2 + 3. C. K. CHEN AND K.-H. WANG.	16
MATRIX	WEAK ASYMPTOTIC CAUSALITY OF THE HAAG-RUELLE S MATRIX. D. N. WILLIAMS.	17
MAUNG	PION-PION S-WAVE INTERACTION. K. M. CROWE, N. DAIRIKI, AND T. MAUNG.	49
MCCARTHY	K-ZERO-MU3 CHARGE ASYMMETRY. D. H. MILLER, R. J. BUDNITZ, W. N. ROSS, R. L. MCCARTHY, AND J. H. BREWER.	49
MCCARTY	APPLICATIONS PROGRAMMING FOR SEGRE-CHAMBERLAIN GROUP. W. MCCARTY.	96
MCINNIS	CALCULATION OF SCATTERING WITH A SPINOR BETHE-SALPETER EQUATION. B. C. MCINNIS.	9
MCINNIS	EXCHANGE POTENTIALS IN THE BETHE-SALPETER EQUATION. B. C. MCINNIS.	8
MCREYNOLDS	MEASUREMENT OF THE (K-PLUS GOES TO POSITRON NU)/(K-PLUS GOES TO MU-PLUS NU) BRANCHING RATIO. A. R. CLARK, B. CORK, T. ELIOFF, D. NEWTON, L. T. KERTH, J. F. MCREYNOLDS, AND W. A. WENZEL.	57
MEASUREMENT	DAPR -- FULLY AUTOMATIC EVENT SCANNING AND MEASUREMENT. B. BRITTON, J. FRANZ, W.-S. GEE, D. HALL, L. JONTULOVICH, H. WHITE, AND F. WINDORSKI.	110
MEASUREMENT	HAZE -- SEMIAUTOMATIC EVENT MEASUREMENT. P. DAVIS, W.-S. GEE, AND L. SHALZ.	109
MEASUREMENT	MEASUREMENT OF NEUTRON PROTON GOES TO GAMMA DEUTERON ANGULAR DISTRIBUTION AS A DIRECT TEST OF TIME REVERSAL IN THE ELECTROMAGNETIC INTERACTION. D. CHENG, V. PEREZ-MENDEZ, J. M. SPERINDE, J. A. HELLAND, B. L. SCHROCK, R. P. HADDOCK, J. DETOEUF, M. J. LONGO, S. WILSON, AND K. K. YOUNG.	63
MEASUREMENT	MEASUREMENT OF THE (K-PLUS GOES TO POSITRON NU)/(K-PLUS GOES TO MU-PLUS NU) BRANCHING RATIO. A. R. CLARK, B. CORK, T. ELIOFF, D. NEWTON, L. T. KERTH, J. F. MCREYNOLDS, AND W. A. WENZEL.	57
MEASUREMENT	MEASUREMENT OF THE DIFFERENTIAL CROSS SECTION FOR PI-MINUS PROTON GOES TO NEUTRON GAMMA BETWEEN 500-MEV AND 1200-MEV PION ENERGIES. K. M. CROWE, A. FAINBERG, A. S. L. PARSONS, P. TRUOEL, R. P. HADDOCK, B. M. K. NEFKENS, L. J. VERHEY, A. WEISS, AND M. E. ZELLER.	50
MEASUREMENT	MEASUREMENT OF THE DIFFERENTIAL CROSS SECTION FOR PI-MINUS PROTON GOES TO NEUTRON GAMMA AT 200 MEV, 320 MEV, AND 370 MEV. A. S. L. PARSONS, P. TRUOEL, P. BERARDO, R. P. HADDOCK, J. A. HELLAND, B. M. K. NEFKENS, L. VERHEY, AND M. E. ZELLER.	47
MEASUREMENTS	HIGH-ENERGY NEUTRON SPECTRUM MEASUREMENTS. H. H. HECKMAN AND H. W. PATTERSON.	54
MECHANICS	CAPILLARY FLUID MECHANICS.	106
MECHANICS	NONRELATIVISTIC QUANTUM MECHANICS IN TERMS OF CURRENTS. D. J. GROSS.	9
MEDICAL	MEDICAL SPARK-CHAMBER PROJECT. A. RINDI AND H. A. WOLLENBERG.	89
MEDICAL	SPARK CHAMBERS FOR THE MEDICAL PROGRAM. L. KAUFMAN, V. PEREZ-MENDEZ, J. SPERINDE, A. RINDI, AND H. WOLLENBERG.	64
MEISSNER	RESEARCH IN MATHEMATICS AND COMPUTER SCIENCE. W. BENSON, P. CONCUS, H. HANERFELD, D. JENSON, L. MEISSNER, G. NOONEY, AND L. VARDAS.	105

MESIC	K-MINUS MESIC ATOMS. C. WIEGAND AND R. KUNSELMAN.	73
MESON	NEUTRAL DECAY MODES OF THE ETA MESON.	34
MESON	STUDY OF THE NEUTRAL K MESON. B. R. WEBBER, F. T. SOLMITZ, F. S. CRAWFORD, JR., AND M. ALSTON-GARNJOST.	30
MESON	1G4 NUCLEON-NUCLEON PHASE SHIFT AND THE SIGMA MESON. J. BINSTOCK.	16
MESONS	DECAYS OF NEUTRAL PSEUDOSCALAR MESONS INTO LEPTON PAIRS. C. QUIGG AND J. D. JACKSON.	14
MESONS	PHOTOPRODUCTION OF VECTOR MESONS AT SLAC. L. KAUFMAN, V. PEREZ-MENDEZ, A. W. STETZ, S. H. WILLIAMS, F. BULOS, R. DIEBOLD, R. LARSEN, D. LEITH, B. F. RICHTER, AND W. BUSZA.	62
MESONS	RADIATIVE CAPTURE OF STOPPED PI-MINUS MESONS ON NUCLEI. K. M. CROWE, A. S. L. PARSONS, AND P. TRUOEL.	47
MILLER	APPLICATIONS PROGRAMMING FOR TRILLING-GOLDHABER GROUP. R. AHLSTRAND, D. ARMSTRONG, E. BURNS, B. HALL, D. LAMB, AND J. MILLER.	94
MILLER	K-ZERO-MU3 CHARGE ASYMMETRY. D. H. MILLER, R. J. BUDNITZ, W. N. ROSS, R. L. MCCARTHY, AND J. H. BREWER.	49
MILLER	K-ZERO-2 CHARGE ASYMMETRY. D. H. MILLER AND M. A. PACIOTTI.	48
MILLER	PUBLICATIONS -- CROWE, MILLER.	51
MIRAGE	THE POMERANCHON AS A MIRAGE TRAJECTORY. S.-Y. CHU, C.-I. TAN, AND P.-D. TING.	8
MISHELOFF	MULTIPERIPHERAL UNITARITY AWAY FROM THE FORWARD DIRECTION. M. N. MISHELOFF.	1
MISSING	K-MINUS PROTON GOES TO LAMBDA PI-PLUS PI-MINUS AND K-MINUS PROTON GOES TO LAMBDA + MISSING MASS. T. S. MAST, A. BARBARO-GALTIERI, AND R. D. TRIPP.	29
MISSING-MASS	DEUTERON MISSING-MASS EXPERIMENT. M. A. ABOLINS, G. S. SMITH, L. H. SMITH, AND A. B. WICKLUND.	35
MO	SEARCH FOR T VIOLATION IN INELASTIC ELECTRON-PROTON SCATTERING. O. CHAMBERLAIN, G. SHAPIRO, H. WEISBERG, P. ROBRISH, S. ROCK, S. SHANNON, R. TAYLOR, L. MO, E. BLOOM, J. LITT, H. KENDALL, AND J. FRIEDMAN.	76
MOMENTUM	THEORIES AT INFINITE MOMENTUM. K. BARDAKCI AND M. B. HALPERN.	10
MONGAN	SEPARABLE POTENTIAL MODELS OF THE NUCLEON-NUCLEON INTERACTION. T. R. MONGAN.	18
MONITOR	TRIST -- SYSTEM MONITOR. P. DAVIS AND C. OSBORNE.	110
MONOPOLES	PERTURBATION THEORY FOR MAGNETIC MONOPOLES. A. RABL.	21
MOREHOUSE	POLARIZATION IN BACKWARD NEUTRON-PROTON SCATTERING AT 3 GEV TO 6 GEV. P. ROBRISH, O. CHAMBERLAIN, R. D. FIELD, JR., R. Z. FUZESY, M. J. LONGO, C. MOREHOUSE, T. POWELL, S. ROCK, S. SHANNON, G. SHAPIRO, AND H. WEISBERG.	77
MOREHOUSE	POLARIZATION IN PI-PLUS PROTON AND PI-MINUS PROTON ELASTIC SCATTERING FROM 250 MEV TO 410 MEV. W. GORN, C. MOREHOUSE, T. POWELL, P. ROBRISH, S. ROCK, S. SHANNON, H. STEINER, AND H. WEISBERG.	76
MOREHOUSE	POLARIZED-PROTON TARGET IMPROVEMENTS. O. CHAMBERLAIN, W. GORN, C. MOREHOUSE, T. POWELL, P. ROBRISH, S. ROCK, S. SHANNON, G. SHAPIRO, AND H. WEISBERG.	77
MORGADO	KE4 EXPERIMENT. B. GAULD, V. PEREZ-MENDEZ, R. J. CENCE, B. D. JONES, R. MORGADO, V. Z. PETERSON, AND L. SHIRAISHI.	60
MORGAN	FOF -- GEOMETRY, KINEMATICAL ANALYSIS, DATA DISPLAY. M. BLOCK, S. BUCKMAN, D. CHRISLER, V. MORGAN, AND F. WINDORSKI.	110
MORRISON	COMPARISON OF THE LIFETIMES OF POSITIVE AND NEGATIVE PIONS. D. S. AYERS, D. O. CALDWELL, A. M. CORMACK, V. B. ELINGS, A. J. GREENBERG, W. P. HESSE, R. W. KENNEY, AND R. J. MORRISON.	60
MOTTERSHEAD	ANALYSIS OF PION-HELIUM SCATTERING FOR THE PION ELECTROMAGNETIC FORM FACTOR. C. T. MOTTERSHEAD.	15
MOYER	K-ZERO L GOES TO 2 PI-ZERO. A. C. HELMHOLZ, R. W. KENNEY, I. R. LINSCOTT, B. J. MOYER, W. P. OLIVER, S. I. PARKER, C. A. REY, R. J. CENCE, B. D. JONES, V. Z. PETERSON, V. J. STENGER, AND J. WILSON.	61
MOYER-HELMHOLZ	APPLICATIONS PROGRAMMING FOR MOYER-HELMHOLZ GROUP. F. GEY, R. HINKINS, AND L. WILSON.	96
MOYER-HELMHOLZ	PROGRAM IN COLLABORATION WITH MOYER-HELMHOLZ GROUP. O. I. DAHL, M. PRIPSTEIN, AND M. WALIG.	34
MOYER-HELMHOLZ	PUBLICATIONS -- MOYER-HELMHOLZ.	64
MULLER	PRODUCTION AND DECAY OF CASCADE HYPERONS. P. M. DAUBER AND R. MULLER.	25

MULTIDIMENSIONAL	PROGRAMMING FOR MULTIDIMENSIONAL EXPERIMENTS.	97
MULTIPERIPHERAL	MULTIPERIPHERAL DYNAMICS. G. F. CHEW, C. DETAR, AND A. PIGNOTTI.	1
MULTIPERIPHERAL	MULTIPERIPHERAL UNITARITY AWAY FROM THE FORWARD DIRECTION. M. N. MISHELOFF.	1
MULTIPERIPHERAL	THE NEW MULTIPERIPHERAL MODEL IN S , T VARIABLE. P. D. TING.	1
MULTIPLET	DIRECT EVIDENCE FOR THE MULTIPLET ASSIGNMENTS OF LAMBDA(1520) AND LAMBDA(1405). R. D. TRIPP, R. O. BANGERTER, A. BARBARO-GALTIERI, AND T. S. MAST.	28
MULVEY	LOW-ENERGY PI-MINUS PROTON INTERACTIONS. W. CHINOWSKY, W. R. GAGE, J. H. MULVEY, AND D. H. SAXON.	75
MUONS	PARTIAL CAPTURE RATES OF MUONS BY OXYGEN-16 LEADING TO EXCITED NUCLEAR STATES OF NITROGEN-15. S. N. KAPLAN, R. V. PYLE, L. E. TEMPLE, AND G. F. VALBY.	59
MUONS	SOME IMPLICATIONS OF A NEW SOURCE OF COSMIC-RAY MUONS. S. PAKVASA.	21
MURRAY	BACKSCATTERED LASER BEAM AT SLAC. W. PODOLSKY, M. S. RABIN, J. J. MURRAY, P. KLEIN, AND C. K. SINCLAIR.	34
MYERS	APPLICATIONS PROGRAMMING FOR POWELL-BIRGE GROUP. H. C. ALBRECHT, M. H. MYERS, J. TYSON, AND J. VISSER, JR.	93
MYERS	AVERAGE NUCLEAR PROPERTIES. W. D. MYERS.	18
MYERS	AVERAGE NUCLEAR PROPERTIES. W. D. MYERS AND W. J. SWIATECKI.	18
NAL	NAL BOOSTER SYNCHROTRON.	115
NAL	NAL MAGNET DESIGN.	115
NAL	NAL RADIO-FREQUENCY SYSTEMS.	115
NEFKENS	MEASUREMENT OF THE DIFFERENTIAL CROSS SECTION FOR PI-MINUS PROTON GOES TO NEUTRON GAMMA BETWEEN 500-MEV AND 1200-MEV PION ENERGIES. K. M. CROWE, A. FAINBERG, A. S. L. PARSONS, P. TRUOEL, R. P. HADDOCK, B. M. K. NEFKENS, L. J. VERHEY, A. WEISS, AND M. E. ZELLER.	50
NEFKENS	MEASUREMENT OF THE DIFFERENTIAL CROSS SECTION FOR PI-MINUS PROTON GOES TO NEUTRON GAMMA AT 200 MEV, 320 MEV, AND 370 MEV. A. S. L. PARSONS, P. TRUOEL, P. BERARDO, R. P. HADDOCK, J. A. HELLAND, B. M. K. NEFKENS, L. VERHEY, AND M. E. ZELLER.	47
NEGATIVE	COMPARISON OF THE LIFETIMES OF POSITIVE AND NEGATIVE PIONS. D. S. AYERS, D. O. CALDWELL, A. M. CORMACK, V. B. ELINGS, A. J. GREENBERG, W. P. HESSE, R. W. KENNEY, AND R. J. MORRISON.	60
NELSON	ETA-ZERO DECAY AND PI-ZERO PI-ZERO NEUTRON EXPERIMENTS. R. CHAFFEE, O. DAHL, R. W. KENNEY, J. NELSON, M. PRIPSTEIN, T. B. RISSER, A. SKUJA, AND M. A. WAHLIG.	59
NEUTRON	ETA-ZERO DECAY AND PI-ZERO PI-ZERO NEUTRON EXPERIMENTS. R. CHAFFEE, O. DAHL, R. W. KENNEY, J. NELSON, M. PRIPSTEIN, T. B. RISSER, A. SKUJA, AND M. A. WAHLIG.	59
NEUTRON	EVALUATION OF FLUXES AND DOSE-EQUIVALENT RATES IN NEUTRON FIELDS AROUND HIGH-ENERGY PROTON ACCELERATORS. A. RINDI.	90
NEUTRON	HIGH-ENERGY NEUTRON SPECTRUM MEASUREMENTS. H. H. HECKMAN AND H. W. PATTERSON.	54
NEUTRON	K-MINUS DEUTERON AND K-MINUS NEUTRON ELASTIC SCATTERING. G. E. KALMUS AND N. JEW.	67
NEUTRON	MEASUREMENT OF NEUTRON PROTON GOES TO GAMMA DEUTERON ANGULAR DISTRIBUTION AS A DIRECT TEST OF TIME REVERSAL IN THE ELECTROMAGNETIC INTERACTION. D. CHENG, V. PEREZ-MENDEZ, J. M. SPERINDE, J. A. HELLAND, B. L. SCHROCK, R. P. HADDOCK, J. DETOEUF, M. J. LONGO, S. WILSON, AND K. K. YOUNG.	63
NEUTRON	MEASUREMENT OF THE DIFFERENTIAL CROSS SECTION FOR PI-MINUS PROTON GOES TO NEUTRON GAMMA BETWEEN 500-MEV AND 1200-MEV PION ENERGIES. K. M. CROWE, A. FAINBERG, A. S. L. PARSONS, P. TRUOEL, R. P. HADDOCK, B. M. K. NEFKENS, L. J. VERHEY, A. WEISS, AND M. E. ZELLER.	50
NEUTRON	MEASUREMENT OF THE DIFFERENTIAL CROSS SECTION FOR PI-MINUS PROTON GOES TO NEUTRON GAMMA AT 200 MEV, 320 MEV, AND 370 MEV. A. S. L. PARSONS, P. TRUOEL, P. BERARDO, R. P. HADDOCK, J. A. HELLAND, B. M. K. NEFKENS, L. VERHEY, AND M. E. ZELLER.	47
NEUTRON	SEARCH FOR THE DECAY N*(1688) GOES TO NEUTRON ETA.	35
NEUTRON	THE REACTIONS K-MINUS PROTON GOES TO ANTIK-ZERO NEUTRON AND K-MINUS PROTON GOES TO LAMBDA PI-ZERO. S. M. FLATTE, A. BARBARO-GALTIERI, R. D. TRIPP, AND C. G. WOHL.	26
NEUTRON-PROTON	POLARIZATION IN BACKWARD NEUTRON-PROTON SCATTERING AT 3 GEV TO 6 GEV. P. ROBRISH, O. CHAMBERLAIN, R. D. FIELD, JR., R. Z. FUZESY, M. J. LONGO, C. MOREHOUSE, T. POWELL, S. ROCK, S. SHANNON, G. SHAPIRO, AND H. WEISBERG.	77

NEWTON	MEASUREMENT OF THE (K-PLUS GOES TO POSITRON NU)/(K-PLUS GOES TO MU-PLUS NU) BRANCHING RATIO. A. R. CLARK, B. CORK, T. ELIOFF, D. NEWTON, L. T. KERTH, J. F. MCREYNOLDS, AND W. A. WENZEL.	57
NEWTON	NEUTRAL LEPTONIC CURRENTS. A. R. CLARK, T. ELIOFF, R. C. FIELD, H. J. FRISCH, R. P. JOHNSON, D. KEEFE, L. T. KERTH, M. H. KRIEGER, D. NEWTON, AND W. A. WENZEL.	57
NILSSON	STABILITY OF SUPERHEAVY NUCLEI AND THEIR POSSIBLE OCCURRENCE IN NATURE. C.-F. TSANG AND S. G. NILSSON.	18
NITROGEN-15	PARTIAL CAPTURE RATES OF MUONS BY OXYGEN-16 LEADING TO EXCITED NUCLEAR STATES OF NITROGEN-15. S. N. KAPLAN, R. V. PYLE, L. E. TEMPLE, AND G. F. VALBY.	59
NONASYMPTOTIC	WHY THE TOTAL NUCLEON-ANTINUCLEON CROSS SECTION IS LARGER THAN THE TOTAL NUCLEON-NUCLEON CROSS SECTION AT NONASYMPTOTIC INCIDENT ENERGY. P. D. TING.	7
NONGASEOUS	RANGES AND STOPPING POWER OF HEAVY IONS IN NONGASEOUS MEDIA. R. W. WALLACE.	91
NONLINEAR	NONLINEAR BLOCK SUCCESSIVE OVERRELAXATION.	106
NONRELATIVISTIC	NONRELATIVISTIC QUANTUM MECHANICS IN TERMS OF CURRENTS. D. J. GROSS.	9
NONSTRANGE	NONSTRANGE INTERACTIONS IN PROTON-PROTON COLLISIONS AT 6.6 GEV/C. E. GELLERT AND G. A. SMITH.	32
NONSTRONG	THEORY OF CURRENTS AND THE NONSTRONG INTERACTIONS. D. J. GROSS AND M. B. HALPERN.	10
NOONEY	RESEARCH IN MATHEMATICS AND COMPUTER SCIENCE. W. BENSON, P. CONCUS, H. HANERFELD, D. JENSON, L. MEISSNER, G. NOONEY, AND L. VARDAS.	105
NUCLEAR	AVERAGE NUCLEAR PROPERTIES. W. D. MYERS.	18
NUCLEAR	AVERAGE NUCLEAR PROPERTIES. W. D. MYERS AND W. J. SWIATECKI.	18
NUCLEAR	NUCLEAR CHEMISTRY PROGRAMMING. N. BROWN, P. COLLOM, M. ITZKOWITZ, G. LITTON, E. QUIGG, C. RUGGE, AND E. SCHROEDER.	97
NUCLEAR	PARTIAL CAPTURE RATES OF MUONS BY OXYGEN-16 LEADING TO EXCITED NUCLEAR STATES OF NITROGEN-15. S. N. KAPLAN, R. V. PYLE, L. E. TEMPLE, AND G. F. VALBY.	59
NUCLEI	RADIATIVE CAPTURE OF STOPPED PI-MINUS MESONS ON NUCLEI. K. M. CROWE, A. S. L. PARSONS, AND P. TRUOEL.	47
NUCLEI	STABILITY OF SUPERHEAVY NUCLEI AND THEIR POSSIBLE OCCURRENCE IN NATURE. C.-F. TSANG AND S. G. NILSSON.	18
NUCLEON	CALCULATION OF THE LAMBDA-K-NUCLEON AND SIGMA-K-NUCLEON COUPLING CONSTANTS G USING KAON-NUCLEON DISPERSION RELATIONS. T. W. ROGERS.	13
NUCLEON	WHY THE TOTAL NUCLEON-ANTINUCLEON CROSS SECTION IS LARGER THAN THE TOTAL NUCLEON-NUCLEON CROSS SECTION AT NONASYMPTOTIC INCIDENT ENERGY. P. D. TING.	7
NUCLEON-ANTINUCLEON	EXCHANGE DEGENERATE CONSPIRATORS IN NUCLEON-NUCLEON AND NUCLEON-ANTINUCLEON CHARGE-EXCHANGE REACTIONS. A. AHMADZADEH.	4
NUCLEON-NUCLEON	EXCHANGE DEGENERATE CONSPIRATORS IN NUCLEON-NUCLEON AND NUCLEON-ANTINUCLEON CHARGE-EXCHANGE REACTIONS. A. AHMADZADEH.	4
NUCLEON-NUCLEON	NUCLEON-NUCLEON INTERACTIONS. W. CHINOWSKY AND W. R. GAGE.	75
NUCLEON-NUCLEON	NUCLEON-NUCLEON TRIPLE SCATTERING. C. M. ANKENBRANDT, D. CHENG, L. T. KERTH, K. C. LEUNG, B. MACDONALD, AND P. T. SURKO.	58
NUCLEON-NUCLEON	SEPARABLE POTENTIAL MODELS OF THE NUCLEON-NUCLEON INTERACTION. T. R. MONGAN.	18
NUCLEON-NUCLEON	WHY THE TOTAL NUCLEON ANTINUCLEON CROSS SECTION IS LARGER THAN THE TOTAL NUCLEON-NUCLEON CROSS SECTION AT NONASYMPTOTIC INCIDENT ENERGY. P. D. TING.	7
NUCLEON-NUCLEON	1G4 NUCLEON-NUCLEON PHASE SHIFT AND THE SIGMA MESON. J. BINSTOCK.	16
NUMERICAL	NUMERICAL SOLUTION METHODS FOR FIRST-ORDER FREDHOLM INTEGRAL EQUATIONS. J. T. ROUTTI.	90
OCTET	CONNECTION BETWEEN OCTET DOMINANCE AND EXCHANGE DEGENERACY. H. LEE.	12
OLIVER	K-ZERO L GOES TO 2 PI-ZERO. A. C. HELMHOLZ, R. W. KENNEY, I. R. LINSCOTT, B. J. MOYER, W. P. OLIVER, S. I. PARKER, C. A. REY, R. J. CENCE, B. D. JONES, V. Z. PETERSON, V. J. STENGER, AND J. WILSON.	61
OMEGA	DOUBLE REGGE ANALYSIS OF THE REACTION K-PLUS PROTON GOES TO K-PLUS OMEGA PROTON AT HIGH ENERGY. A. PIGNOTTI, G. ALEXANDER, A. FIRESTONE, C. FU, AND G. GOLDHABER.	6
OMEGA	THE DECAY OMEGA GOES TO PI-PLUS PI-MINUS. S. M. FLATTE.	26
ON-LINE	ON-LINE SYSTEM. R. W. BIRGE AND P. W. WEBER.	69
ONG	CROSSING-SYMMETRIC BOOTSTRAP SOLUTION AND LARGE-ANGLE PROTON-PROTON SCATTERING. K. M. ONG AND J. HARTE.	9

ORBIT	INFLUENCE OF FLUCTUATING FORCES AT ORBIT EXTREMA. B. R. PATTERSON.	20
ORBIT	ORBIT STUDIES PROGRAMMING.	100
OSBORNE	TRIST -- SYSTEM MONITOR. P. DAVIS AND C. OSBORNE.	110
OVERRELAXATION	NONLINEAR BLOCK SUCCESSIVE OVERRELAXATION.	106
OXYGEN-16	PARTIAL CAPTURE RATES OF MUONS BY OXYGEN-16 LEADING TO EXCITED NUCLEAR STATES OF NITROGEN-15. S. N. KAPLAN, R. V. PYLE, L. E. TEMPLE, AND G. F. VALBY.	59
PACIOTTI	K-ZERO-2 CHARGE ASYMMETRY. D. H. MILLER AND M. A. PACIOTTI.	48
PAKVASA	SOME IMPLICATIONS OF A NEW SOURCE OF COSMIC-RAY MUONS. S. PAKVASA.	21
PARAMETERIZATION	GENERAL PARAMETERIZATION OF REGGE RESIDUES AND TRAJECTORIES. S. KLEIN.	5
PARDOE	GROUP A PROGRAMMING EFFORT. B. PARDOE.	41
PARKER	K-ZERO L GOES TO 2 PI-ZERO. A. C. HELMHOLZ, R. W. KENNEY, I. R. LINSCOTT, B. J. MOYER, W. P. OLIVER, S. I. PARKER, C. A. REY, R. J. CENCE, B. D. JONES, V. Z. PETERSON, V. J. STENGER, AND J. WILSON.	61
PARSONS	MEASUREMENT OF THE DIFFERENTIAL CROSS SECTION FOR PI-MINUS PROTON GOES TO NEUTRON GAMMA BETWEEN 500-MEV AND 1200-MEV PION ENERGIES. K. M. CROWE, A. FAINBERG, A. S. L. PARSONS, P. TRUOEL, R. P. HADDOCK, B. M. K. NEFKENS, L. J. VERHEY, A. WEISS, AND M. E. ZELLER.	50
PARSONS	MEASUREMENT OF THE DIFFERENTIAL CROSS SECTION FOR PI-MINUS PROTON GOES TO NEUTRON GAMMA AT 200 MEV, 320 MEV, AND 370 MEV. A. S. L. PARSONS, P. TRUOEL, P. BERARDO, R. P. HADDOCK, J. A. HELLAND, B. M. K. NEFKENS, L. VERHEY, AND M. E. ZELLER.	47
PARSONS	PION FORM FACTOR. K. M. CROWE, A. S. L. PARSONS, AND A. FAINBERG.	50
PARSONS	RADIATIVE CAPTURE OF STOPPED PI-MINUS MESONS ON NUCLEI. K. M. CROWE, A. S. L. PARSONS, AND P. TRUOEL.	47
PARTICLE	HIGH-ALTITUDE PARTICLE PHYSICS AND COSMIC-RAY EXPERIMENTAL FACILITY. L. W. ALVAREZ, J. A. ANDERSON, A. H. BUFFINGTON, P. M. DAUBER, L. J. LLOYD, L. H. SMITH, AND M. A. WAHLIG.	36
PARTICLE	PARTICLE DATA GROUP. A. H. ROSENFELD, N. BARASH-SCHMIDT, A. BARBARO-GALTIERI, O. BENARY, L. R. PRICE, P. SODING, AND C. G. WOHL.	44
PARTICLE	PARTICLE IDENTIFIER. D. GREINER, R. ALBERT, AND H. H. HECKMAN.	53
PARTICLES	REGGEIZATION OF EXTERNAL PARTICLES. M. L. THIEBAUX.	7
PATTERSON	HIGH-ENERGY NEUTRON SPECTRUM MEASUREMENTS. H. H. HECKMAN AND H. W. PATTERSON.	54
PATTERSON	INFLUENCE OF FLUCTUATING FORCES AT ORBIT EXTREMA. B. R. PATTERSON.	20
PATTERSON	PUBLICATIONS -- PATTERSON.	91
PAUL	STATUS OF THE 184-INCH CYCLOTRON EXTRACTION STUDIES. A. C. PAUL.	50
PENNY	SYSTEMS PROGRAMMING. E. BEALS, W. BENSON, J. BORGES, D. BRAINARD, M. CLINNICK, W. DEMPSTER, R. FINK, R. FRIEDMAN, J. GLASNER, W. HUTCHINSON, J. JOHNSTON, J. KNIGHT, S. PENNY, D. STEVENS, AND R. TRACY.	103
PEREZ-MENDEZ	KE4 EXPERIMENT. B. GAULD, V. PEREZ-MENDEZ, R. J. CENCE, B. D. JONES, R. MORGADO, V. Z. PETERSON, AND L. SHIRAISHI.	60
PEREZ-MENDEZ	MEASUREMENT OF NEUTRON PROTON GOES TO GAMMA DEUTERON ANGULAR DISTRIBUTION AS A DIRECT TEST OF TIME REVERSAL IN THE ELECTROMAGNETIC INTERACTION. D. CHENG, V. PEREZ-MENDEZ, J. M. SPERINDE, J. A. HELLAND, B. L. SCHROCK, R. P. HADDOCK, J. DETOEUF, M. J. LONGO, S. WILSON, AND K. K. YOUNG.	63
PEREZ-MENDEZ	PHOTOPRODUCTION OF VECTOR MESONS AT SLAC. L. KAUFMAN, V. PEREZ-MENDEZ, A. W. STETZ, S. H. WILLIAMS, F. BULOS, R. DIEBOLD, R. LARSEN, D. LEITH, B. F. RICHTER, AND W. BUSZA.	62
PEREZ-MENDEZ	PI-MINUS HE3 INTERACTIONS. J. SPERINDE, B. M. SMITH, V. PEREZ-MENDEZ, AND D. FREDERICKSON.	63
PEREZ-MENDEZ	PROTON-HE SCATTERING EXPERIMENT. A. W. STETZ, V. PEREZ-MENDEZ, AND J. M. SPERINDE.	62
PEREZ-MENDEZ	SPARK CHAMBERS FOR THE MEDICAL PROGRAM. L. KAUFMAN, V. PEREZ-MENDEZ, J. SPERINDE, A. RINDI, AND H. WOLLENBERG.	64
PEREZ-MENDEZ	WIRE SPARK CHAMBERS AND ELECTRONIC READOUTS. R. L. GROVE, G. L. STOKER, AND V. PEREZ-MENDEZ.	63
PERIPHERAL	DOUBLE PERIPHERAL MODEL FOR THREE-BODY FINAL-STATE REACTIONS. E. L. BERGER.	3

PERTURBATION	PERTURBATION THEORY FOR MAGNETIC MONOPOLES. A. RABL.	21
PETERSON	K-ZERO L GOES TO 2 PI-ZERO. A. C. HELMHOLZ, R. W. KENNEY, I. R. LINSCOTT, B. J. MOYER, W. P. OLIVER, S. I. PARKER, C. A. REY, R. J. CENCE, B. D. JONES, V. Z. PETERSON, V. J. STENGER, AND J. WILSON.	61
PETERSON	KE4 EXPERIMENT. B. GAULD, V. PEREZ-MENDEZ, R. J. CENCE, B. D. JONES, R. MORGADO, V. Z. PETERSON, AND L. SHIRAISHI.	60
PHOTOPRODUCTION	DO FINITE-ENERGY SUM RULES IN PION PHOTOPRODUCTION PROVE THE EXISTENCE OF A PION CONSPIRACY. J. D. JACKSON AND C. QUIGG.	2
PHOTOPRODUCTION	PHOTOPRODUCTION OF VECTOR MESONS AT SLAC. L. KAUFMAN, V. PEREZ-MENDEZ, A. W. STETZ, S. H. WILLIAMS, F. BULOS, R. DIEBOLD, R. LARSEN, D. LEITH, B. F. RICHTER, AND W. BUSZA.	62
PHOTOPRODUCTION	STUDY OF VECTOR-MESON PHOTOPRODUCTION. W. PODOLSKY, M. S. RABIN, A. H. ROSENFELD, AND R. WINDMOLDERS.	34
PHYSICS	APPLICATIONS PROGRAMMING FOR LOFGREN PHYSICS GROUP. J. P. TYSON, L. D. WILSON, AND D. H. ZURLINDEN.	96
PHYSICS	HIGH-ALTITUDE PARTICLE PHYSICS AND COSMIC-RAY EXPERIMENTAL FACILITY. L. W. ALVAREZ, J. A. ANDERSON, A. H. BUFFINGTON, P. M. DAUBER, L. J. LLOYD, L. H. SMITH, AND M. A. WAHLIG.	36
PHYSICS	PHYSICS RESEARCH STAFF.	135
PHYSICS	PLASMA PHYSICS -- VAN ATTA.	85
PHYSICS	PUBLICATIONS, PHYSICS -- LOFGREN.	58
PI	ANTIK PROTON GOES TO LAMBDA PI INTERACTIONS AT LOW ENERGY. J. H. CHAN AND J. A. KADYK.	82
PI	RESONANCE PRODUCTION IN K-MINUS PROTON GOES TO SIGMA PI PI, SIGMA PI PI PI. P. EBERHARD, J. H. FRIEDMAN, M. PRIPSTEIN, AND R. R. ROSS.	26
PI-MINUS	K-MINUS PROTON GOES TO LAMBDA PI-PLUS PI-MINUS AND K-MINUS PROTON GOES TO LAMBDA + MISSING MASS. T. S. MAST, A. BARBARO-GALTIERI, AND R. D. TRIPP.	29
PI-MINUS	LOW-ENERGY PI-MINUS PROTON INTERACTIONS. W. CHINOWSKY, W. R. GAGE, J. H. MULVEY, AND D. H. SAXON.	75
PI-MINUS	LRL-SLAC EXPERIMENT ON PI-MINUS PROTON INELASTIC REACTIONS. B. DELER, L. R. PRICE, A. H. ROSENFELD, P. SODING, D. HERNDON, R. LONGACRE, D. LEITH, A. BRODY, AND B. SHEN.	33
PI-MINUS	MEASUREMENT OF THE DIFFERENTIAL CROSS SECTION FOR PI-MINUS PROTON GOES TO NEUTRON GAMMA BETWEEN 500-MEV AND 1200-MEV PION ENERGIES. K. M. CROWE, A. FAINBERG, A. S. L. PARSONS, P. TRUOEL, R. P. HADDOCK, B. M. K. NEFKENS, L. J. VERHEY, A. WEISS, AND M. E. ZELLER.	50
PI-MINUS	MEASUREMENT OF THE DIFFERENTIAL CROSS SECTION FOR PI-MINUS PROTON GOES TO NEUTRON GAMMA AT 200 MEV, 320 MEV, AND 370 MEV. A. S. L. PARSONS, P. TRUOEL, P. BERARDO, R. P. HADDOCK, J. A. HELLAND, B. M. K. NEFKENS, L. VERHEY, AND M. E. ZELLER.	47
PI-MINUS	PI-MINUS HE3 INTERACTIONS. J. SPERINDE, B. M. SMITH, V. PEREZ-MENDEZ, AND D. FREDERICKSON.	63
PI-MINUS	POLARIZATION IN PI-PLUS PROTON AND PI-MINUS PROTON ELASTIC SCATTERING FROM 250 MEV TO 410 MEV. W. GORN, C. MOREHOUSE, T. POWELL, P. ROBRISH, S. ROCK, S. SHANNON, H. STEINER, AND H. WEISBERG.	76
PI-MINUS	RADIATIVE CAPTURE OF STOPPED PI-MINUS MESONS ON NUCLEI. K. M. CROWE, A. S. L. PARSONS, AND P. TRUOEL.	47
PI-MINUS	THE DECAY OMEGA GOES TO PI-PLUS PI-MINUS. S. M. FLATTE.	26
PI-MINUSPLUS	STUDY OF THE REACTION K-MINUS PROTON GOES TO SIGMA PLUSMINUS PI-MINUSPLUS. P. M. DAUBER AND A. BARBARO-GALTIERI.	27
PI-PLUS	EVIDENCE FOR EXCHANGE OF THE RHO AND A2 REGGE POLES IN THE REACTIONS PI-PLUS PROTON GOES TO PI-ZERO DELTA-PLUSPLUS, PI-PLUS PROTON GOES TO ETA-ZERO DELTA-PLUSPLUS, AND K-PLUS PROTON GOES TO K-ZERO DELTA-PLUSPLUS. R. MATHEWS.	5
PI-PLUS	FOURTH-ORDER ELECTROMAGNETIC PI-PLUS PI-ZERO MASS DIFFERENCE. I. S. GERSTEIN AND H. J. SCHNITZER.	11
PI-PLUS	K-MINUS PROTON GOES TO LAMBDA PI-PLUS PI-MINUS AND K-MINUS PROTON GOES TO LAMBDA + MISSING MASS. T. S. MAST, A. BARBARO-GALTIERI, AND R. D. TRIPP.	29
PI-PLUS	PI-PLUS DEUTERON INTERACTIONS FROM 1.1 GEV/C TO 2.3 GEV/C. M. A. ABOLINS, O. I. DAHL, G. DANBURG, D. DAVIES, AND R. RADER.	30
PI-PLUS	PI-PLUS DEUTERON INTERACTIONS FROM 2.8 GEV/C TO 4.2 GEV/C. M. A. ABOLINS, O. I. DAHL, AND P. HOCH.	30
PI-PLUS	PI-PLUS PROTON INTERACTION AT 3.7 GEV/C. W. R. BUTLER, D. G. COYNE, AND J. N. MACNAUGHTON.	81

PI-PLUS	PI-PLUS PROTON INTERACTIONS BETWEEN 2.9 GEV/C AND 4.1 GEV/C. G. GIDAL, R. BIRGE, G. BORREANI, D. BROWN, AND F. LOTT.	68
PI-PLUS	POLARIZATION IN PI-PLUS PROTON AND PI-MINUS PROTON ELASTIC SCATTERING FROM 250 MEV TO 410 MEV. W. GORN, C. MCREHOUSE, T. POWELL, P. ROBRISH, S. ROCK, S. SHANNON, H. STEINER, AND H. WEISBERG.	76
PI-PLUS	SEARCH FOR A TWO-PI-ZERO RESONANCE NEAR 730 MEV IN PI-PLUS DEUTERON INTERACTIONS. R. J. MANNING AND G. A. SMITH.	31
PI-PLUS	STUDY OF THE STRANGE-PARTICLE CHANNELS IN PI-PLUS PROTON BETWEEN 1.3 GEV/C AND 1.65 GEV/C. G. BORREANI, G. KALMUS, AND J. LOUIE.	68
PI-PLUS	THE DECAY OMEGA GOES TO PI-PLUS PI-MINUS. S. M. FLATTE.	26
PI-PLUS	TWO-PRONG EVENTS IN PI-PLUS PROTON FILM BETWEEN 1.3 GEV/C AND 1.85 GEV/C. R. W. BIRGE AND G. E. KALMUS.	69
PI-ZERO	ETA-ZERO DECAY AND PI-ZERO PI-ZERO NEUTRON EXPERIMENTS. R. CHAFFEE, O. DAHL, R. W. KENNEY, J. NELSON, M. PRIPSTEIN, T. B. RISSER, A. SKUJA, AND M. A. WAHLIG.	59
PI-ZERO	EVIDENCE FOR EXCHANGE OF THE RHO AND A2 REGGE POLES IN THE REACTIONS PI-PLUS PROTON GOES TO PI-ZERO DELTA-PLUSPLUS, PI-PLUS PROTON GOES TO ETA-ZERO DELTA-PLUSPLUS, AND K-PLUS PROTON GOES TO K-ZERO DELTA-PLUSPLUS. R. MATHEWS.	5
PI-ZERO	FOURTH-ORDER ELECTROMAGNETIC PI-PLUS PI-ZERO MASS DIFFERENCE. I. S. GERSTEIN AND H. J. SCHNITZER.	11
PI-ZERO	K-MINUS PROTON GOES TO LAMBDA PI-ZERO. J. LOUIE.	67
PI-ZERO	K-ZERO L GOES TO 2 PI-ZERO. A. C. HELMHOLZ, R. W. KENNEY, I. R. LINSCOTT, B. J. MOYER, W. P. OLIVER, S. I. PARKER, C. A. REY, R. J. CENCE, B. D. JONES, V. Z. PETERSON, V. J. STENGER, AND J. WILSON.	61
PI-ZERO	THE REACTIONS K-MINUS PROTON GOES TO ANTIK-ZERO NEUTRON AND K-MINUS PROTON GOES TO LAMBDA PI-ZERO. S. M. FLATTE, A. BARBARO-GALTIERI, R. D. TRIPP, AND C. G. WOHL.	26
PIGNOTTI	DOUBLE REGGE ANALYSIS OF THE REACTION K-PLUS PROTON GOES TO K-PLUS OMEGA PROTON AT HIGH ENERGY. A. PIGNOTTI, G. ALEXANDER, A. FIRESTONE, C. FU, AND G. GOLDHABER.	6
PIGNOTTI	MULTIPERIPHERAL DYNAMICS. G. F. CHEW, C. DETAR, AND A. PIGNOTTI.	1
PION	ANALYSIS OF PION-HELIUM SCATTERING FOR THE PION ELECTROMAGNETIC FORM FACTOR. C. T. MOTTERSHEAD.	15
PION	DO FINITE-ENERGY SUM RULES IN PION PHOTOPRODUCTION PROVE THE EXISTENCE OF A PION CONSPIRACY. J. D. JACKSON AND C. QUIGG.	2
PION	MEASUREMENT OF THE DIFFERENTIAL CROSS SECTION FOR PI-MINUS PROTON GOES TO NEUTRON GAMMA BETWEEN 500-MEV AND 1200-MEV PION ENERGIES. K. M. CROWE, A. FAINBERG, A. S. L. PARSONS, P. TRUOEL, R. P. HADDOCK, B. M. K. NEFKENS, L. J. VERHEY, A. WEISS, AND M. E. ZELLER.	50
PION	PION CONSPIRACY AND CONTINUOUS-MOMENT SUM RULES. R. L. THEWS.	12
PION	PION FORM FACTOR. K. M. CROWE, A. S. L. PARSONS, AND A. FAINBERG.	50
PION	STRONG PION-ALPHA SCATTERING WITH ELECTROMAGNETIC CORRECTIONS. R. CHRISTENSEN.	14
PION-PION	A MODEL FOR PION-PION SCATTERING. J. SHAPIRO AND J. YELLIN.	3
PION-PION	AN I=1 PION-PION SUM RULE AND THE DERIVATIVE OF THE S-WAVE AMPLITUDES. S. Y. CHU AND B. R. DESAI.	12
PION-PION	PION-PION S-WAVE INTERACTION. K. M. CROWE, N. DAIRIKI, AND T. MAUNG.	49
PIONIC	PIONIC ATOMS. R. KUNSELMAN AND G. A. GRIN.	74
PIONS	COMPARISON OF THE LIFETIMES OF POSITIVE AND NEGATIVE PIONS. D. S. AYERS, D. O. CALDWELL, A. M. CORMACK, V. B. ELINGS, A. J. GREENBERG, W. P. HESSE, R. W. KENNEY, AND R. J. MORRISON.	60
PIONS	DIBOSON PRODUCTION BY 2-GEV/C PIONS. A. R. CLARK, B. CORK, T. ELIOFF, L. T. KERTH, T. N. RANGASWAMY, AND W. A. WENZEL.	57
PIONS	STOPPING-POWER DIFFERENCES OF CHARGED PIONS IN EMULSION. H. H. HECKMAN.	54
PI82	PI82 EXPERIMENT. S. M. FLATTE, J. H. FRIEDMAN, A. BARBARO-GALTIERI, M. ALSTON-GARNJOST, G. R. LYNCH, M. S. RABIN, F. T. SOLMITZ, P. DAVIS, M. MATISON, N. UYEDA, AND V. WALUCH.	34
PLASMA	PLASMA PHYSICS -- VAN ATTA.	85

PLASMAS	INTERACTION OF INTENSE, RELATIVISTIC ELECTRON BEAMS WITH SELF-GENERATED PLASMAS. S. D. PUTNAM.	20
PLUSMINUS	STUDY OF THE REACTION K-MINUS PROTON GOES TO SIGMA PLUSMINUS PI-MINUSPLUS. P. M. DAUBER AND A. BARBARO-GALTIERI.	27
PODOLSKY	BACKSCATTERED LASER BEAM AT SLAC. W. PODOLSKY, M. S. RABIN, J. J. MURRAY, P. KLEIN, AND C. K. SINCLAIR.	34
PODOLSKY	STUDY OF VECTOR-MESON PHOTOPRODUCTION. W. PODOLSKY, M. S. RABIN, A. H. ROSENFELD, AND R. WINDMOLDERS.	34
POLARIZATION	POLARIZATION IN BACKWARD NEUTRON-PROTON SCATTERING AT 3 GEV TO 6 GEV. P. ROBRISH, O. CHAMBERLAIN, R. D. FIELD, JR., R. Z. FUZESY, M. J. LONGO, C. MOREHOUSE, T. POWELL, S. ROCK, S. SHANNON, G. SHAPIRO, AND H. WEISBERG.	77
POLARIZATION	POLARIZATION IN PI-PLUS PROTON AND PI-MINUS PROTON ELASTIC SCATTERING FROM 250 MEV TO 410 MEV. W. GORN, C. MOREHOUSE, T. POWELL, P. ROBRISH, S. ROCK, S. SHANNON, H. STEINER, AND H. WEISBERG.	76
POLARIZED-PROTON	POLARIZED-PROTON TARGET IMPROVEMENTS. O. CHAMBERLAIN, W. GORN, C. MOREHOUSE, T. POWELL, P. ROBRISH, S. ROCK, S. SHANNON, G. SHAPIRO, AND H. WEISBERG.	77
POLES	EVIDENCE FOR EXCHANGE OF THE RHO AND A2 REGGE POLES IN THE REACTIONS PI-PLUS PROTON GOES TO PI-ZERO DELTA-PLUSPLUS, PI-PLUS PROTON GOES TO ETA-ZERO DELTA-PLUSPLUS, AND K-PLUS PROTON GOES TO K-ZERO DELTA-PLUSPLUS. R. MATHEWS.	5
POMERANCHON	THE POMERANCHON AS A MIRAGE TRAJECTORY. S.-Y. CHU, C.-I. TAN, AND P. D. TING.	8
POMERANCHUK	LOW-ENERGY THEOREMS AND THE POMERANCHUK TRAJECTORY FOR COMPTON SCATTERING. F. ARBAB AND R. C. BROWER.	14
POWELL	ACCELERATOR AND MAGNET-DESIGN PROGRAMMING. V. BRADY, B. BURKHART, E. CLOSE, J. COLONIAS, N. HARRISON, R. HEALEY, A. KENNEY, B. LEVINE, B. POWELL, AND S. SACKETT.	99
POWELL	POLARIZATION IN BACKWARD NEUTRON-PROTON SCATTERING AT 3 GEV TO 6 GEV. P. ROBRISH, O. CHAMBERLAIN, R. D. FIELD, JR., R. Z. FUZESY, M. J. LONGO, C. MOREHOUSE, T. POWELL, S. ROCK, S. SHANNON, G. SHAPIRO, AND H. WEISBERG.	77
POWELL	POLARIZATION IN PI-PLUS PROTON AND PI-MINUS PROTON ELASTIC SCATTERING FROM 250 MEV TO 410 MEV. W. GORN, C. MOREHOUSE, T. POWELL, P. ROBRISH, S. ROCK, S. SHANNON, H. STEINER, AND H. WEISBERG.	76
POWELL	POLARIZED-PROTON TARGET IMPROVEMENTS. O. CHAMBERLAIN, W. GORN, C. MOREHOUSE, T. POWELL, P. ROBRISH, S. ROCK, S. SHANNON, G. SHAPIRO, AND H. WEISBERG.	77
POWELL	25-INCH HYDROGEN BUBBLE CHAMBER. W. M. POWELL, J. A. KADYK, AND G. J. ECKMAN.	87
POWELL-BIRGE	APPLICATIONS PROGRAMMING FOR POWELL-BIRGE GROUP. H. C. ALBRECHT, M. H. MYERS, J. TYSON, AND J. VISSER, JR.	93
POWELL-BIRGE	PUBLICATIONS -- POWELL-BIRGE.	70
POWER	RANGES AND STOPPING POWER OF HEAVY IONS IN NONGASEOUS MEDIA. R. W. WALLACE.	91
PPU	ACCELERATOR LINK PROGRAM PPU.	104
PRICE	LRL-SLAC EXPERIMENT ON PI-MINUS PROTON INELASTIC REACTIONS. B. DELER, L. R. PRICE, A. H. ROSENFELD, P. SODING, D. HERNDON, R. LONGACRE, D. LEITH, A. BRODY, AND B. SHEN.	33
PRICE	PARTICLE DATA GROUP. A. H. ROSENFELD, N. BARASH-SCHMIDT, A. BARBARO-GALTIERI, O. BENARY, L. R. PRICE, P. SODING, AND C. G. WOHL.	44
PRINTED-CIRCUIT	PROGRAM FOR PRINTED-CIRCUIT ARTWORK.	103
PRIPSTEIN	D66 EXPERIMENT. P. EBERHARD, G. R. LYNCH, AND M. PRIPSTEIN.	32
PRIPSTEIN	ETA-ZERO DECAY AND PI-ZERO PI-ZERO NEUTRON EXPERIMENTS. R. CHAFFEE, O. DAHL, R. W. KENNEY, J. NELSON, M. PRIPSTEIN, T. B. RISSER, A. SKUJA, AND M. A. WAHLIG.	59
PRIPSTEIN	PROGRAM IN COLLABORATION WITH MOYER-HELMHOLZ GROUP. O. I. DAHL, M. PRIPSTEIN, AND M. WALIG.	34
PRIPSTEIN	RESONANCE PRODUCTION IN K-MINUS PROTON GOES TO SIGMA PI PI, SIGMA PI PI PI. P. EBERHARD, J. H. FRIEDMAN, M. PRIPSTEIN, AND R. R. ROSS.	26
PROCESSING	BIOMEDICAL DATA PROCESSING.	102
PROCESSOR	GENERAL-PURPOSE MACRO PROCESSOR.	105
PROGRAM	ACCELERATOR LINK PROGRAM PPU.	104
PROGRAM	COMPUTER PROGRAM DEVELOPMENT.	109
PROGRAM	EMULSION SPECTROGRAPH PROGRAM. L. W. ALVAREZ, A. H. BUFFINGTON, P. M. DAUBER, J. H. FRIEDMAN, M. ALSTON-GARNJOST, L. H. SMITH, F. T. SOLMITZ, M. L. STEVENSON, AND M. A. WAHLIG.	38

PROGRAM	MAGNET TEST DATA PROGRAM.	103
PROGRAM	PROGRAM FOR PRINTED-CIRCUIT ARTWORK.	103
PROGRAM	PROGRAM IN COLLABORATION WITH MOYER-HELMHOLZ GROUP. O. I. DAHL, M. PRIPSTEIN, AND M. WALIG.	34
PROGRAM	PROGRAM STORAGE SYSTEM.	104
PROGRAM	SHOP AND ENGINEER JOB-SCHEDULING PROGRAM SHUFL.	103
PROGRAM	SPARK CHAMBERS FOR THE MEDICAL PROGRAM. L. KAUFMAN, V. PEREZ-MENDEZ, J. SPERINDE, A. RINDI, AND H. WOLLENBERG.	64
PROGRAMMING	ACCELERATOR AND MAGNET-DESIGN PROGRAMMING. V. BRADY, B. BURKHART, E. CLOSE, J. COLONIAS, N. HARRISON, R. HEALEY, A. KENNEY, B. LEVINE, B. POWELL, AND S. SACKETT.	99
PROGRAMMING	APPLICATIONS PROGRAMMING FOR POWELL-BIRGE GROUP. H. C. ALBRECHT, M. H. MYERS, J. TYSON, AND J. VISSER, JR.	93
PROGRAMMING	APPLICATIONS PROGRAMMING FOR TRILLING-GOLDHABER GROUP. R. AHLSTRAND, D. ARMSTRONG, E. BURNS, B. HALL, D. LAMB, AND J. MILLER.	94
PROGRAMMING	APPLICATIONS PROGRAMMING FOR LOFGREN PHYSICS GROUP. J. P. TYSON, L. D. WILSON, AND D. H. ZURLINDEN.	96
PROGRAMMING	APPLICATIONS PROGRAMMING FOR MOYER-HELMHOLZ GROUP. F. GEY, R. HINKINS, AND L. WILSON.	96
PROGRAMMING	APPLICATIONS PROGRAMMING FOR SEGRE-CHAMBERLAIN GROUP. W. MCCARTY.	96
PROGRAMMING	BEVATRON CONTROL PROGRAMMING.	103
PROGRAMMING	BIOMEDICAL INSTRUMENTATION PROGRAMMING.	100
PROGRAMMING	BIOMEDICAL PROGRAMMING. D. BASINGER, D. HARRELL, C. HERRIN, R. HINKINS, W. HOGAN, H. HOLMES, M. HOROVITZ, T. MAHAN, E. SCHROEDER, M. SIMMONS, AND K. WILEY.	100
PROGRAMMING	CROSS SECTION PROGRAMMING.	99
PROGRAMMING	ELECTRON-RING ACCELERATOR PROGRAMMING.	100
PROGRAMMING	GROUP A PROGRAMMING EFFORT. B. PARDOE.	41
PROGRAMMING	GROUP A PROGRAMMING NOTES WRITTEN DURING THIS PERIOD.	43
PROGRAMMING	MAGNET DESIGN PROGRAMMING.	99
PROGRAMMING	MISCELLANEOUS PROGRAMMING. R. BELSHE, D. HARRELL, M. SIMMONS, K. WILEY, AND E. WILLIAMS.	103
PROGRAMMING	NUCLEAR CHEMISTRY PROGRAMMING. N. BROWN, P. COLLOM, M. ITZKOWITZ, G. LITTON, E. QUIGG, C. RUGGE, AND E. SCHROEDER.	97
PROGRAMMING	ORBIT STUDIES PROGRAMMING.	100
PROGRAMMING	PROGRAMMING FOR MULTIDIMENSIONAL EXPERIMENTS.	97
PROGRAMMING	PROGRAMMING FOR QUANTITATIVE BIOMEDICAL MODELS.	101
PROGRAMMING	PROGRAMMING FOR SPECTRAL ANALYSIS.	98
PROGRAMMING	RADIATION DOSIMETRY PROGRAMMING.	102
PROGRAMMING	SYSTEMS PROGRAMMING. E. BEALS, W. BENSON, J. BORGES, D. BRAINARD, M. CLINNICK, W. DEMPSTER, R. FINK, R. FRIEDMAN, J. GLASNER, W. HUTCHINSON, J. JOHNSTON, J. KNIGHT, S. PENNY, D. STEVENS, AND R. TRACY.	103
PROGRAMS	DATA-ANALYSIS PROGRAMS, GROUP A.	42
PROGRAMS	DATA-EDITING PROGRAMS, GROUP A.	42
PROGRAMS	LIBRARY-FUNCTION PROGRAMS, GROUP A.	42
PROGRAMS	SPARK-CHAMBER PROGRAMS, GROUP A.	43
PROGRAMS	SPIRAL-READER PROGRAMS, GROUP A.	42
PROGRAMS	SUPPORT PROGRAMS, GROUP A.	43
PROPERTIES	AVERAGE NUCLEAR PROPERTIES. W. D. MYERS.	18
PROPERTIES	AVERAGE NUCLEAR PROPERTIES. W. D. MYERS AND W. J. SWIATECKI.	18
PROPERTIES	MACROSCOPIC CAUSALITY AND ANALYTICITY PROPERTIES OF THE S MATRIX. D. IAGOLNITZER AND H. P. STAPP.	17
PROTON	ANTIK PROTON GOES TO LAMBDA PI INTERACTIONS AT LOW ENERGY. J. H. CHAN AND J. A. KADYK.	82
PROTON	ANTIPROTON-PROTON INTERACTIONS. R. BURNS, P. CONDON, M. MANDELKERN, J. SCHULTZ, W. CHINOWSKY, AND W. R. GAGE.	75
PROTON	DOUBLE REGGE ANALYSIS OF THE REACTION K-PLUS PROTON GOES TO K-PLUS OMEGA PROTON AT HIGH ENERGY. A. PIGNOTTI, G. ALEXANDER, A. FIRESTONE, C. FU, AND G. GOLDHABER.	6
PROTON	EVALUATION OF FLUXES AND DOSE-EQUIVALENT RATES IN NEUTRON FIELDS AROUND HIGH-ENERGY PROTON ACCELERATORS. A. RINDI.	90
PROTON	EVIDENCE FOR EXCHANGE OF THE RHO AND A2 REGGE POLES IN THE REACTIONS PI-PLUS PROTON GOES TO PI-ZERO DELTA-PLUSPLUS, PI-PLUS PROTON GOES TO ETA-ZERO DELTA-PLUSPLUS, AND K-PLUS PROTON GOES TO K-ZERO DELTA-PLUSPLUS. R. MATHEWS.	5
PROTON	K-MINUS PROTON GOES TO LAMBDA PI-ZERO. J. LOUIE.	67
PROTON	K-MINUS PROTON GOES TO LAMBDA PI-PLUS PI-MINUS AND K-MINUS PROTON GOES TO LAMBDA + MISSING MASS. T. S. MAST, A. BARBARO-GALTIERI, AND R. D. TRIPP.	29

PROTON	K-MINUS PROTON INTERACTIONS AROUND 1 GEV/C AND THE Y*0(1815). J. SAHOURIA.	67
PROTON	K-PLUS PROTON INTERACTIONS AT 9 GEV/C. G. ALEXANDER, A. FIRESTONE, C. FU, G. GOLDHABER, AND D. LISSAUER.	82
PROTON	LAMBDA-ZERO PROTON INTERACTIONS. G. ALEXANDER, P. GAPOSCHKIN, J. A. KADYK, AND G. H. TRILLING.	82
PROTON	LOW-ENERGY PI-MINUS PROTON INTERACTIONS. W. CHINOWSKY, W. R. GAGE, J. H. MULVEY, AND D. H. SAXON.	75
PROTON	LRL-SLAC EXPERIMENT ON PI-MINUS PROTON INELASTIC REACTIONS. B. DELER, L. R. PRICE, A. H. ROSENFELD, P. SODING, D. HERNDON, R. LONGACRE, D. LEITH, A. BRODY, AND B. SHEN.	33
PROTON	MEASUREMENT OF NEUTRON PROTON GOES TO GAMMA DEUTERON ANGULAR DISTRIBUTION AS A DIRECT TEST OF TIME REVERSAL IN THE ELECTROMAGNETIC INTERACTION. D. CHENG, V. PEREZ-MENDEZ, J. M. SPERINDE, J. A. HELLAND, B. L. SCHROCK, R. P. HADDOCK, J. DETOEUF, M. J. LONGO, S. WILSON, AND K. K. YOUNG.	63
PROTON	MEASUREMENT OF THE DIFFERENTIAL CROSS SECTION FOR PI-MINUS PROTON GOES TO NEUTRON GAMMA BETWEEN 500-MEV AND 1200-MEV PION ENERGIES. K. M. CROWE, A. FAINBERG, A. S. L. PARSONS, P. TRUOEL, R. P. HADDOCK, B. M. K. NEFKENS, L. J. VERHEY, A. WEISS, AND M. E. ZELLER.	50
PROTON	MEASUREMENT OF THE DIFFERENTIAL CROSS SECTION FOR PI-MINUS PROTON GOES TO NEUTRON GAMMA AT 200 MEV, 320 MEV, AND 370 MEV. A. S. L. PARSONS, P. TRUOEL, P. BERARDO, R. P. HADDOCK, J. A. HELLAND, B. M. K. NEFKENS, L. VERHEY, AND M. E. ZELLER.	47
PROTON	PI-PLUS PROTON INTERACTION AT 3.7 GEV/C. W. R. BUTLER, D. G. COYNE, AND J. N. MACNAUGHTON.	81
PROTON	PI-PLUS PROTON INTERACTIONS BETWEEN 2.9 GEV/C AND 4.1 GEV/C. G. GIDAL, R. BIRGE, G. BORREANI, D. BROWN, AND F. LOTT.	68
PROTON	POLARIZATION IN PI-PLUS PROTON AND PI-MINUS PROTON ELASTIC SCATTERING FROM 250 MEV TO 410 MEV. W. GORN, C. MOREHOUSE, T. POWELL, P. ROBRISH, S. ROCK, S. SHANNON, H. STEINER, AND H. WEISBERG.	76
PROTON	RESONANCE PRODUCTION IN K-MINUS PROTON GOES TO SIGMA PI PI, SIGMA PI PI PI. P. EBERHARD, J. H. FRIEDMAN, M. PRIPSTEIN, AND R. R. ROSS.	26
PROTON	STUDY OF K-MINUS PROTON FOUR-PRONGED REACTIONS. J. H. FRIEDMAN AND R. R. ROSS.	27
PROTON	STUDY OF THE STRANGE-PARTICLE CHANNELS IN PI-PLUS PROTON BETWEEN 1.3 GEV/C AND 1.65 GEV/C. G. BORREANI, G. KALMUS, AND J. LOUIE.	68
PROTON	THE REACTION K-MINUS PROTON GOES TO K*1/2(892)N*3/2(1238). J. H. FRIEDMAN AND R. R. ROSS.	27
PROTON	THE REACTIONS K-MINUS PROTON GOES TO ANTIK-ZERO NEUTRON AND K-MINUS PROTON GOES TO LAMBDA PI-ZERO. S. M. FLATTE, A. BARBARO-GALTIERI, R. D. TRIPP, AND C. G. WOHL.	26
PROTON	TWO-PRONG EVENTS IN PI-PLUS PROTON FILM BETWEEN 1.3 GEV/C AND 1.85 GEV/C. R. W. BIRGE AND G. E. KALMUS.	69
PROTON-HE	PROTON-HE SCATTERING EXPERIMENT. A. W. STETZ, V. PEREZ-MENDEZ, AND J. M. SPERINDE.	62
PROTON-PROTON	CROSSING-SYMMETRIC BOOTSTRAP SOLUTION AND LARGE-ANGLE PROTON-PROTON SCATTERING. K. M. ONG AND J. HARTE.	9
PROTON-PROTON	NONSTRANGE INTERACTIONS IN PROTON-PROTON COLLISIONS AT 6.6 GEV/C. E. GELLERT AND G. A. SMITH.	32
PROTON-PROTON	REGGE POLES AND THE PROTON-PROTON DIFFERENTIAL CROSS SECTIONS FROM SERPUKHOV. W. RARITA.	6
PROTON-PROTON	STRANGE-PARTICLE INTERACTIONS IN PROTON-PROTON COLLISIONS AT 5.5 GEV/C AND 6.6 GEV/C. A. B. WICKLUND AND G. A. SMITH.	33
PROTONS	LOW-ALTITUDE GEOMAGNETICALLY TRAPPED PROTONS. H. H. HECKMAN.	53
PROVE	DO FINITE-ENERGY SUM RULES IN PION PHOTOPRODUCTION PROVE THE EXISTENCE OF A PION CONSPIRACY. J. D. JACKSON AND C. QUIGG.	2
PSEUDOSCALAR	DECAYS OF NEUTRAL PSEUDOSCALAR MESONS INTO LEPTON PAIRS. C. QUIGG AND J. D. JACKSON.	14
PUBLICATIONS	PUBLICATIONS -- BAKER.	107
PUBLICATIONS	PUBLICATIONS -- CHEW.	22
PUBLICATIONS	PUBLICATIONS -- CROWE, MILLER.	51
PUBLICATIONS	PUBLICATIONS -- GROUP A.	44
PUBLICATIONS	PUBLICATIONS -- HECKMAN.	55
PUBLICATIONS	PUBLICATIONS -- MOYER-HELMHOLZ.	64

PUBLICATIONS	PUBLICATIONS -- PATTERSON.	91
PUBLICATIONS	PUBLICATIONS -- POWELL-BIRGE.	70
PUBLICATIONS	PUBLICATIONS -- SEGRE-CHAMBERLAIN.	77
PUBLICATIONS	PUBLICATIONS -- SHUGART.	79
PUBLICATIONS	PUBLICATIONS -- TRILLING-GOLDHABER.	83
PUBLICATIONS	PUBLICATIONS -- VAN ATTA.	85
PUBLICATIONS	PUBLICATIONS -- WHITE.	113
PUBLICATIONS	PUBLICATIONS, ACCELERATOR STUDY -- LOFGREN.	125
PUBLICATIONS	PUBLICATIONS, BEVATRON -- LOFGREN.	128
PUBLICATIONS	PUBLICATIONS, PHYSICS -- LOFGREN.	58
PUTNAM	INTERACTION OF INTENSE, RELATIVISTIC ELECTRON BEAMS WITH SELF-GENERATED PLASMAS. S. D. PUTNAM.	20
PYLE	PARTIAL CAPTURE RATES OF MUONS BY OXYGEN-16 LEADING TO EXCITED NUCLEAR STATES OF NITROGEN-15. S. N. KAPLAN, R. V. PYLE, L. E. TEMPLE, AND G. F. VALBY.	59
QUANTITATIVE	PROGRAMMING FOR QUANTITATIVE BIOMEDICAL MODELS.	101
QUANTUM	NONRELATIVISTIC QUANTUM MECHANICS IN TERMS OF CURRENTS. D. J. GROSS.	9
QUANTUM	ON INTERACTING LOCAL QUANTUM FIELDS DESCRIBING MANY MASSES AND SPINS. W. BIERTER AND K. M. BITAR.	15
QUASILINEAR	QUASILINEAR EVOLUTION OF THE WEIBEL-KAHN INSTABILITY. N. ALBRIGHT.	20
QUIGG	DECAYS OF NEUTRAL PSEUDOSCALAR MESONS INTO LEPTON PAIRS. C. QUIGG AND J. D. JACKSON.	14
QUIGG	DO FINITE-ENERGY SUM RULES IN PION PHOTOPRODUCTION PROVE THE EXISTENCE OF A PION CONSPIRACY. J. D. JACKSON AND C. QUIGG.	2
QUIGG	NUCLEAR CHEMISTRY PROGRAMMING. N. BROWN, P. COLLOM, M. ITZKOWITZ, G. LITTON, E. QUIGG, C. RUGGE, AND E. SCHROEDER.	97
RABIN	BACKSCATTERED LASER BEAM AT SLAC. W. PODOLSKY, M. S. RABIN, J. J. MURRAY, P. KLEIN, AND C. K. SINCLAIR.	34
RABIN	K82 EXPERIMENT. S. M. FLATTE, J. H. FRIEDMAN, A. BARBARO-GALTIERI, M. ALSTON-GARNJOST, G. R. LYNCH, M. S. RABIN, F. T. SOLMITZ, P. DAVIS, M. MATISON, N. UYEDA, AND V. WALUCH.	33
RABIN	PI82 EXPERIMENT. S. M. FLATTE, J. H. FRIEDMAN, A. BARBARO-GALTIERI, M. ALSTON-GARNJOST, G. R. LYNCH, M. S. RABIN, F. T. SOLMITZ, P. DAVIS, M. MATISON, N. UYEDA, AND V. WALUCH.	34
RABIN	STUDY OF VECTOR-MESON PHOTOPRODUCTION. W. PODOLSKY, M. S. RABIN, A. H. ROSENFELD, AND R. WINDMOLDERS.	34
RABL	PERTURBATION THEORY FOR MAGNETIC MONOPOLES. A. RABL.	21
RABL	SUGAWARA'S THEORY OF CURRENTS. A. RABL.	10
RADER	PI-PLUS DEUTERON INTERACTIONS FROM 1.1 GEV/C TO 2.3 GEV/C. M. A. ABOLINS, O. I. DAHL, G. DANBURG, D. DAVIES, AND R. RADER.	30
RADIATION	RADIATION DOSIMETRY PROGRAMMING.	102
RADIATIVE	RADIATIVE CAPTURE OF STOPPED PI-MINUS MESONS ON NUCLEI. K. M. CROWE, A. S. L. PARSONS, AND P. TRUOEL.	47
RADIO-FREQUENCY	MODEL OF RADIO-FREQUENCY SYSTEM FOR IMPROVEMENT OF 184-INCH CYCLOTRON. L. KANSTEIN.	130
RADIO-FREQUENCY	NAL RADIO-FREQUENCY SYSTEMS.	115
RADIOGEOLOGY	RADIOGEOLOGY. H. A. WOLLENBERG AND A. R. SMITH.	89
RANGASWAMY	DIBOSON PRODUCTION BY 2-GEV/C PIONS. A. R. CLARK, B. CORK, T. ELIOFF, L. T. KERTH, T. N. RANGASWAMY, AND W. A. WENZEL.	57
RARE	RARE DECAYS OF CHARGED K MESONS. R. HILDEBRAND, R. STIENING, AND C. WIEGAND.	73
RARITA	REGGE POLES AND THE PROTON-PROTON DIFFERENTIAL CROSS SECTIONS FROM SERPUKHOV. W. RARITA.	6
REACTION	DOUBLE REGGE ANALYSIS OF THE REACTION K-PLUS PROTON GOES TO K-PLUS OMEGA PROTON AT HIGH ENERGY. A. PIGNOTTI, G. ALEXANDER, A. FIRESTONE, C. FU, AND G. GOLDHABER.	6
REACTION	STUDY OF THE REACTION K-MINUS PROTON GOES TO SIGMA PLUSMINUS PI-MINUSPLUS. P. M. DAUBER AND A. BARBARO-GALTIERI.	27
REACTION	THE REACTION K-MINUS PROTON GOES TO K*1/2(892)N*3/2(1238). J. H. FRIEDMAN AND R. R. ROSS.	27
REACTIONS	CHARGE-EXCHANGE (K-MINUS PROTON GOES TO ANTIK-ZERO NEUTRON) AND ELASTIC (K-MINUS PROTON GOES TO K-MINUS PROTON) REACTIONS. T. S. MAST, R. BANGERTER, A. BARBARO-GALTIERI, AND R. D. TRIPP.	29
REACTIONS	DOUBLE PERIPHERAL MODEL FOR THREE-BODY FINAL-STATE REACTIONS. E. L. BERGER.	3
REACTIONS	EVIDENCE FOR EXCHANGE OF THE RHO AND A2 REGGE POLES IN THE REACTIONS PI-PLUS PROTON GOES TO PI-ZERO DELTA-PLUSPLUS, PI-PLUS PROTON GOES TO ETA-ZERO DELTA-PLUSPLUS, AND K-PLUS PROTON GOES TO K-ZERO DELTA-PLUSPLUS. R. MATHEWS.	5

REACTIONS	EXCHANGE DEGENERATE CONSPIRATORS IN NUCLEON-NUCLEON AND NUCLEON-ANTINUCLEON CHARGE-EXCHANGE REACTIONS. A. AHMADZADEH.	4
REACTIONS	LRL-SLAC EXPERIMENT ON PI-MINUS PROTON INELASTIC REACTIONS. B. DELER, L. R. PRICE, A. H. ROSENFELD, P. SODING, D. HERNDON, R. LONGACRE, D. LEITH, A. BRODY, AND B. SHEN.	33
REACTIONS	STUDY OF K-MINUS PROTON FOUR-PRONGED REACTIONS. J. H. FRIEDMAN AND R. R. ROSS.	27
REACTIONS	THE REACTIONS K-MINUS PROTON GOES TO ANTIK-ZERO NEUTRON AND K-MINUS PROTON GOES TO LAMBDA PI-ZERO. S. M. FLATTE, A. BARBARO-GALTIERI, R. D. TRIPP, AND C. G. WOHL.	26
READOUTS	WIRE SPARK CHAMBERS AND ELECTRONIC READOUTS. R. L. GROVE, G. L. STOKER, AND V. PEREZ-MENDEZ.	63
REDUCTION	DATA REDUCTION. R. W. BIRGE AND P. W. WEBER.	69
REGGE	A REGGE CLASSIFICATION OF THE BARYON RESONANCES. S. KLEIN.	5
REGGE	ABSORPTION AND REGGE EXCHANGE. G. FOX AND G. A. RINGLAND.	4
REGGE	DOUBLE REGGE ANALYSIS OF THE REACTION K-PLUS PROTON GOES TO K-PLUS OMEGA PROTON AT HIGH ENERGY. A. PIGNOTTI, G. ALEXANDER, A. FIRESTONE, C. FU, AND G. GOLDHABER.	6
REGGE	EVIDENCE FOR EXCHANGE OF THE RHO AND A2 REGGE POLES IN THE REACTIONS PI-PLUS PROTON GOES TO PI-ZERO DELTA-PLUSPLUS, PI-PLUS PROTON GOES TO ETA-ZERO DELTA-PLUSPLUS, AND K-PLUS PROTON GOES TO K-ZERO DELTA-PLUSPLUS. R. MATHEWS.	5
REGGE	GENERAL PARAMETERIZATION OF REGGE RESIDUES AND TRAJECTORIES. S. KLEIN.	5
REGGE	REGGE TRAJECTORIES. K. H. WANG.	3
REGGE POLES	REGGE POLES AND THE PROTON-PROTON DIFFERENTIAL CROSS SECTIONS FROM SERPUKHOV. W. RARITA.	6
REGGE-POLE	REGGE-POLE EXPANSION AT T=0. J. H. WEIS.	6
REGGE-POLE	SUMS OF DIRECT-CHANNEL REGGE-POLE CONTRIBUTIONS AND CROSSING SYMMETRY. N. N. KHURI.	2
REGGEIZATION	REGGEIZATION OF EXTERNAL PARTICLES. M. L. THIEBAUX.	7
REGGEIZED	REGGEIZED EXTERNAL LINES. I. T. GRODSKY.	8
RESIDUES	GENERAL PARAMETERIZATION OF REGGE RESIDUES AND TRAJECTORIES. S. KLEIN.	5
RESONANCE	RESONANCE PRODUCTION IN K-MINUS PROTON GOES TO SIGMA PI PI, SIGMA PI PI PI. P. EBERHARD, J. H. FRIEDMAN, M. PRIPSTEIN, AND R. R. ROSS.	26
RESONANCE	SEARCH FOR A TWO-PI-ZERO RESONANCE NEAR 730 MEV IN PI-PLUS DEUTERON INTERACTIONS. R. J. MANNING AND G. A. SMITH.	31
RESONANCES	A REGGE CLASSIFICATION OF THE BARYON RESONANCES. S. KLEIN.	5
REY	K-ZERO L GOES TO 2 PI-ZERO. A. C. HELMHOLZ, R. W. KENNEY, I. R. LINSCOTT, B. J. MOYER, W. P. OLIVER, S. I. PARKER, C. A. REY, R. J. CENCE, B. D. JONES, V. Z. PETERSON, V. J. STENGER, AND J. WILSON.	61
RHO	EVIDENCE FOR EXCHANGE OF THE RHO AND A2 REGGE POLES IN THE REACTIONS PI-PLUS PROTON GOES TO PI-ZERO DELTA-PLUSPLUS, PI-PLUS PROTON GOES TO ETA-ZERO DELTA-PLUSPLUS, AND K-PLUS PROTON GOES TO K-ZERO DELTA-PLUSPLUS. R. MATHEWS.	5
RHODES	COMPUTER OPERATIONS. F. M. ATCHLEY AND P. A. RHODES.	106
RICHTER	PHOTOPRODUCTION OF VECTOR MESONS AT SLAC. L. KAUFMAN, V. PEREZ-MENDEZ, A. W. STETZ, S. H. WILLIAMS, F. BULOS, R. DIEBOLD, R. LARSEN, D. LEITH, B. F. RICHTER, AND W. BUSZA.	62
RINDI	EVALUATION OF FLUXES AND DOSE-EQUIVALENT RATES IN NEUTRON FIELDS AROUND HIGH-ENERGY PROTON ACCELERATORS. A. RINDI.	90
RINDI	MEDICAL SPARK-CHAMBER PROJECT. A. RINDI AND H. A. WOLLENBERG.	89
RINDI	SPARK CHAMBERS FOR THE MEDICAL PROGRAM. L. KAUFMAN, V. PEREZ-MENDEZ, J. SPERINDE, A. RINDI, AND H. WOLLENBERG.	64
RINGLAND	ABSORPTION AND REGGE EXCHANGE. G. FOX AND G. A. RINGLAND.	4
RINGLAND	MECHANISM FOR CROSS-OVER. G. FOX, R. LOGAN, AND G. A. RINGLAND.	5
RISING	A MODEL OF INDEFINITELY RISING TRAJECTORIES. S.-Y. CHU, C.-I. TAN, AND P. D. TING.	4
RISSER	ETA-ZERO DECAY AND PI-ZERO PI-ZERO NEUTRON EXPERIMENTS. R. CHAFFEE, O. DAHL, R. W. KENNEY, J. NELSON, M. PRIPSTEIN, T. B. RISSER, A. SKUJA, AND M. A. WAHLIG.	59
RITTENBERG	ANTIPROTON INTERACTIONS IN HYDROGEN AND DEUTERIUM. M. A. ABOLINS, A. RITTENBERG, AND G. A. SMITH.	31

RITTENBERG	K-MINUS INTERACTIONS IN DEUTERIUM. A. BARBARO-GALTIERI, M. MATISON, AND A. RITTENBERG.	27
ROBRISH	POLARIZATION IN BACKWARD NEUTRON-PROTON SCATTERING AT 3 GEV TO 6 GEV. P. ROBRISH, O. CHAMBERLAIN, R. D. FIELD, JR., R. Z. FUZESY, M. J. LONGO, C. MOREHOUSE, T. POWELL, S. ROCK, S. SHANNON, G. SHAPIRO, AND H. WEISBERG.	77
ROBRISH	POLARIZATION IN PI-PLUS PROTON AND PI-MINUS PROTON ELASTIC SCATTERING FROM 250 MEV TO 410 MEV. W. GORN, C. MOREHOUSE, T. POWELL, P. ROBRISH, S. ROCK, S. SHANNON, H. STEINER, AND H. WEISBERG.	76
ROBRISH	POLARIZED-PROTON TARGET IMPROVEMENTS. O. CHAMBERLAIN, W. GORN, C. MOREHOUSE, T. POWELL, P. ROBRISH, S. ROCK, S. SHANNON, G. SHAPIRO, AND H. WEISBERG.	77
ROBRISH	SEARCH FOR T VIOLATION IN INELASTIC ELECTRON-PROTON SCATTERING. O. CHAMBERLAIN, G. SHAPIRO, H. WEISBERG, P. ROBRISH, S. ROCK, S. SHANNON, R. TAYLOR, L. MO, E. BLOOM, J. LITT, H. KENDALL, AND J. FRIEDMAN.	76
ROCK	POLARIZATION IN BACKWARD NEUTRON-PROTON SCATTERING AT 3 GEV TO 6 GEV. P. ROBRISH, O. CHAMBERLAIN, R. D. FIELD, JR., R. Z. FUZESY, M. J. LONGO, C. MOREHOUSE, T. POWELL, S. ROCK, S. SHANNON, G. SHAPIRO, AND H. WEISBERG.	77
ROCK	POLARIZATION IN PI-PLUS PROTON AND PI-MINUS PROTON ELASTIC SCATTERING FROM 250 MEV TO 410 MEV. W. GORN, C. MOREHOUSE, T. POWELL, P. ROBRISH, S. ROCK, S. SHANNON, H. STEINER, AND H. WEISBERG.	76
ROCK	POLARIZED-PROTON TARGET IMPROVEMENTS. O. CHAMBERLAIN, W. GORN, C. MOREHOUSE, T. POWELL, P. ROBRISH, S. ROCK, S. SHANNON, G. SHAPIRO, AND H. WEISBERG.	77
ROCK	SEARCH FOR T VIOLATION IN INELASTIC ELECTRON-PROTON SCATTERING. O. CHAMBERLAIN, G. SHAPIRO, H. WEISBERG, P. ROBRISH, S. ROCK, S. SHANNON, R. TAYLOR, L. MO, E. BLOOM, J. LITT, H. KENDALL, AND J. FRIEDMAN.	76
ROGERS	CALCULATION OF THE LAMBDA-K-NUCLEON AND SIGMA-K-NUCLEON COUPLING CONSTANTS G USING KAON NUCLEON DISPERSION RELATIONS. T. W. ROGERS.	13
ROSENFELD	LRL-SLAC EXPERIMENT ON PI-MINUS PROTON INELASTIC REACTIONS. B. DELER, L. R. PRICE, A. H. ROSENFELD, P. SODING, D. HERNDON, R. LONGACRE, D. LEITH, A. BRODY, AND B. SHEN.	33
ROSENFELD	PARTICLE DATA GROUP. A. H. ROSENFELD, N. BARASH-SCHMIDT, A. BARBARO-GALTIERI, O. BENARY, L. R. PRICE, P. SODING, AND C. G. WOHL.	44
ROSENFELD	STUDY OF VECTOR-MESON PHOTOPRODUCTION. W. PODOLSKY, M. S. RABIN, A. H. ROSENFELD, AND R. WINDMOLDERS.	34
ROSS	FLUX AMPLIFIER. P. EBERHARD AND R. ROSS.	38
ROSS	K-ZERO-MU3 CHARGE ASYMMETRY. D. H. MILLER, R. J. BUDNITZ, W. N. ROSS, R. L. MCCARTHY, AND J. H. BREWER.	49
ROSS	RESONANCE PRODUCTION IN K-MINUS PROTON GOES TO SIGMA PI PI, SIGMA PI PI PI. P. EBERHARD, J. H. FRIEDMAN, M. PRIPSTEIN, AND R. R. ROSS.	26
ROSS	STUDY OF K-MINUS PROTON FOUR-PRONGED REACTIONS. J. H. FRIEDMAN AND R. R. ROSS.	27
ROSS	THE REACTION K-MINUS PROTON GOES TO K*1/2(892)N*3/2(1238). J. H. FRIEDMAN AND R. R. ROSS.	27
ROUTTI	NUMERICAL SOLUTION METHODS FOR FIRST-ORDER FREDHOLM INTEGRAL EQUATIONS. J. T. ROUTTI.	90
RUGGE	NUCLEAR CHEMISTRY PROGRAMMING. N. BROWN, P. COLLOM, M. ITZKOWITZ, G. LITTON, E. QUIGG, C. RUGGE, AND E. SCHROEDER.	97
S	THE NEW MULTIPERIPHERAL MODEL IN S , T VARIABLE. P. D. TING.	1
S	WEAK ASYMPTOTIC CAUSALITY OF THE HAAG-RUELLE S MATRIX. D. N. WILLIAMS.	17
S MATRIX	MACROSCOPIC CAUSALITY AND ANALYTICITY PROPERTIES OF THE S MATRIX. D. IAGOLNITZER AND H. P. STAPP.	17
S-MATRIX	EXPLORATION FOR S-MATRIX DYNAMICS. R. C. HWA.	8
S-MATRIX	ZERO-MASS BOSONS IN S-MATRIX THEORY. F. ARBAB AND R. C. BROWER.	14
S-WAVE	AN I=1 PION-PION SUM RULE AND THE DERIVATIVE OF THE S-WAVE AMPLITUDES. S. Y. CHU AND B. R. DESAI.	12
S-WAVE	PION-PION S-WAVE INTERACTION. K. M. CROWE, N. DAIRIKI, AND T. MAUNG.	49
SACHERER	TRANSVERSE SPACE-CHARGE EFFECTS IN CIRCULAR ACCELERATORS. F. SACHERER.	19

SACKETT	ACCELERATOR AND MAGNET-DESIGN PROGRAMMING. V. BRADY, B. BURKHART, E. CLOSE, J. COLONIAS, N. HARRISON, R. HEALEY, A. KENNEY, B. LEVINE, B. POWELL, AND S. SACKETT.	99
SAHOURIA	K-MINUS PROTON INTERACTIONS AROUND 1 GEV/C AND THE Y*0(1815). J. SAHOURIA.	67
SAXON	LOW-ENERGY PI-MINUS PROTON INTERACTIONS. W. CHINOWSKY, W. R. GAGE, J. H. MULVEY, AND D. H. SAXON.	75
SCANNING	DAPR -- FULLY AUTOMATIC EVENT SCANNING AND MEASUREMENT. B. BRITTON, J. FRANZ, W.-S. GEE, D. HALL, L. JONTULOVICH, H. WHITE, AND F. WINDORSKI.	110
SCATTERING	A MODEL FOR PION-PION SCATTERING. J. SHAPIRO AND J. YELLIN.	3
SCATTERING	ANALYSIS OF PION-HELIUM SCATTERING FOR THE PION ELECTROMAGNETIC FORM FACTOR. C. T. MOTTERSHEAD.	15
SCATTERING	CALCULATION OF SCATTERING WITH A SPINOR BETHE-SALPETER EQUATION. B. C. MCINNIS.	9
SCATTERING	CROSSING-SYMMETRIC BOOTSTRAP SOLUTION AND LARGE-ANGLE PROTON-PROTON SCATTERING. K. M. ONG AND J. HARTE.	9
SCATTERING	K-MINUS DEUTERON AND K-MINUS NEUTRON ELASTIC SCATTERING. G. E. KALMUS AND N. JEW.	67
SCATTERING	LOW-ENERGY THEOREMS AND THE POMERANCHUK TRAJECTORY FOR COMPTON SCATTERING. F. ARBAB AND R. C. BROWER.	14
SCATTERING	NUCLEON-NUCLEON TRIPLE SCATTERING. C. M. ANKENBRANDT, D. CHENG, L. T. KERTH, K. C. LEUNG, B. MACDONALD, AND P. T. SURKO.	58
SCATTERING	POLARIZATION IN BACKWARD NEUTRON-PROTON SCATTERING AT 3 GEV TO 6 GEV. P. ROBRISH, O. CHAMBERLAIN, R. D. FIELD, JR., R. Z. FUZESY, M. J. LONGO, C. MOREHOUSE, T. POWELL, S. ROCK, S. SHANNON, G. SHAPIRO, AND H. WEISBERG.	77
SCATTERING	POLARIZATION IN PI-PLUS PROTON AND PI-MINUS PROTON ELASTIC SCATTERING FROM 250 MEV TO 410 MEV. W. GORN, C. MOREHOUSE, T. POWELL, P. ROBRISH, S. ROCK, S. SHANNON, H. STEINER, AND H. WEISBERG.	76
SCATTERING	PROTON-HE SCATTERING EXPERIMENT. A. W. STETZ, V. PEREZ-MENDEZ, AND J. M. SPERINDE.	62
SCATTERING	SEARCH FOR T VIOLATION IN INELASTIC ELECTRON-PROTON SCATTERING. O. CHAMBERLAIN, G. SHAPIRO, H. WEISBERG, P. ROBRISH, S. ROCK, S. SHANNON, R. TAYLOR, L. MO, E. BLOOM, J. LITT, H. KENDALL, AND J. FRIEDMAN.	76
SCATTERING	STRONG PION-ALPHA SCATTERING WITH ELECTROMAGNETIC CORRECTIONS. R. CHRISTENSEN.	14
SCHMID	FINITE-ENERGY SUM RULES AND THE PROCESS ZERO-MINUS + ZERO-MINUS GOES TO ZERO-MINUS + ZERO-MINUS. C. SCHMID AND J. YELLIN.	12
SCHNITZER	FOURTH-ORDER ELECTROMAGNETIC PI-PLUS PI-ZERO MASS DIFFERENCE. I. S. GERSTEIN AND H. J. SCHNITZER.	11
SCHROCK	MEASUREMENT OF NEUTRON PROTON GOES TO GAMMA DEUTERON ANGULAR DISTRIBUTION AS A DIRECT TEST OF TIME REVERSAL IN THE ELECTROMAGNETIC INTERACTION. D. CHENG, V. PEREZ-MENDEZ, J. M. SPERINDE, J. A. HELLAND, B. L. SCHROCK, R. P. HADDOCK, J. DETOEUF, M. J. LONGO, S. WILSON, AND K. K. YOUNG.	63
SCHROEDER	BIOMEDICAL PROGRAMMING. D. BASINGER, D. HARRELL, C. HERRIN, R. HINKINS, W. HOGAN, H. HOLMES, M. HOROVITZ, T. MAHAN, E. SCHROEDER, M. SIMMONS, AND K. WILEY.	100
SCHROEDER	NUCLEAR CHEMISTRY PROGRAMMING. N. BROWN, P. COLLOM, M. ITZKOWITZ, G. LITTON, E. QUIGG, C. RUGGE, AND E. SCHROEDER.	97
SCHULTZ	ANTIPROTON-PROTON INTERACTIONS. R. BURNS, P. CONDON, M. MANDELKERN, J. SCHULTZ, W. CHINOWSKY, AND W. R. GAGE.	75
SCHWARTZ	VARIATIONAL PRINCIPLES FOR INTEGRALS. C. SCHWARTZ.	21
SCIENCE	RESEARCH IN MATHEMATICS AND COMPUTER SCIENCE. W. BENSON, P. CONCUS, H. HANERFELD, D. JENSON, L. MEISSNER, G. NOONEY, AND L. VARDAS.	105
SEEGER	K-PLUS DEUTERON INTERACTIONS FROM 860 MEV/C TO 1580 MEV/C. R. W. BLAND, A. A. HIRATA, G. GOLDHABER, V. H. SEEGER, G. H. TRILLING, AND C. G. WOHL.	81
SEGRE-CHAMBERLAIN	APPLICATIONS PROGRAMMING FOR SEGRE-CHAMBERLAIN GROUP. W. MCCARTY.	96
SEGRE-CHAMBERLAIN	PUBLICATIONS -- SEGRE-CHAMBERLAIN.	77
SELF-GENERATED	INTERACTION OF INTENSE, RELATIVISTIC ELECTRON BEAMS WITH SELF-GENERATED PLASMAS. S. D. PUTNAM.	20
SEMIAUTOMATIC	HAZE -- SEMIAUTOMATIC EVENT MEASUREMENT. P. DAVIS, W.-S. GEE, AND L. SHALZ.	109

SEPARABLE	SEPARABLE POTENTIAL MODELS OF THE NUCLEON-NUCLEON INTERACTION. T. R. MONGAN.	18
SERPUKHOV	REGGE POLES AND THE PROTON-PROTON DIFFERENTIAL CROSS SECTIONS FROM SERPUKHOV. W. RARITA.	6
SESSLER	ANALYSIS OF THE ELECTRON-RING ACCELERATOR. L. J. LASLETT AND A. M. SESSLER.	19
SHALZ	HAZE -- SEMIAUTOMATIC EVENT MEASUREMENT. P. DAVIS, W.-S. GEE, AND L. SHALZ.	109
SHANNON	POLARIZATION IN BACKWARD NEUTRON-PROTON SCATTERING AT 3 GEV TO 6 GEV. P. ROBRISH, O. CHAMBERLAIN, R. D. FIELD, JR., R. Z. FUZESY, M. J. LONGO, C. MOREHOUSE, T. POWELL, S. ROCK, S. SHANNON, G. SHAPIRO, AND H. WEISBERG.	77
SHANNON	POLARIZATION IN PI-PLUS PROTON AND PI-MINUS PROTON ELASTIC SCATTERING FROM 250 MEV TO 410 MEV. W. GORN, C. MOREHOUSE, T. POWELL, P. ROBRISH, S. ROCK, S. SHANNON, H. STEINER, AND H. WEISBERG.	76
SHANNON	POLARIZED-PROTON TARGET IMPROVEMENTS. O. CHAMBERLAIN, W. GORN, C. MOREHOUSE, T. POWELL, P. ROBRISH, S. ROCK, S. SHANNON, G. SHAPIRO, AND H. WEISBERG.	77
SHANNON	SEARCH FOR T VIOLATION IN INELASTIC ELECTRON-PROTON SCATTERING. O. CHAMBERLAIN, G. SHAPIRO, H. WEISBERG, P. ROBRISH, S. ROCK, S. SHANNON, R. TAYLOR, L. MO, E. BLOOM, J. LITT, H. KENDALL, AND J. FRIEDMAN.	76
SHAPIRO	A MODEL FOR PION-PION SCATTERING. J. SHAPIRO AND J. YELLIN.	3
SHAPIRO	POLARIZATION IN BACKWARD NEUTRON-PROTON SCATTERING AT 3 GEV TO 6 GEV. P. ROBRISH, O. CHAMBERLAIN, R. D. FIELD, JR., R. Z. FUZESY, M. J. LONGO, C. MOREHOUSE, T. POWELL, S. ROCK, S. SHANNON, G. SHAPIRO, AND H. WEISBERG.	77
SHAPIRO	POLARIZED-PROTON TARGET IMPROVEMENTS. O. CHAMBERLAIN, W. GORN, C. MOREHOUSE, T. POWELL, P. ROBRISH, S. ROCK, S. SHANNON, G. SHAPIRO, AND H. WEISBERG.	77
SHAPIRO	SEARCH FOR T VIOLATION IN INELASTIC ELECTRON-PROTON SCATTERING. O. CHAMBERLAIN, G. SHAPIRO, H. WEISBERG, P. ROBRISH, S. ROCK, S. SHANNON, R. TAYLOR, L. MO, E. BLOOM, J. LITT, H. KENDALL, AND J. FRIEDMAN.	76
SHEN	LRL-SLAC EXPERIMENT ON PI-MINUS PROTON INELASTIC REACTIONS. B. DELER, L. R. PRICE, A. H. ROSENFELD, P. SODING, D. HERNDON, R. LONGACRE, D. LEITH, A. BRODY, AND B. SHEN.	33
SHERS	CURRENT ALGEBRA. P. SHERS.	11
SHIELDING	CONTINUING PROJECT -- 88-INCH-CYCLOTRON CAVE-4 SHIELDING STUDIES. L. D. STEPHENS.	90
SHIFTS	CALCULATION OF STRONG-COUPLING-CONSTANT SHIFTS. M. K. AU-YANG.	13
SHIRAISHI	KE4 EXPERIMENT. B. GAULD, V. PEREZ-MENDEZ, R. J. CENCE, B. D. JONES, R. MORGADO, V. Z. PETERSON, AND L. SHIRAISHI.	60
SHOP	SHOP AND ENGINEER JOB-SCHEDULING PROGRAM SHUFL.	103
SHUFL	SHOP AND ENGINEER JOB-SCHEDULING PROGRAM SHUFL.	103
SHUGART	ATOMIC BEAM STUDIES. H. SHUGART.	79
SHUGART	PUBLICATIONS -- SHUGART.	79
SIGMA	RESONANCE PRODUCTION IN K-MINUS PROTON GOES TO SIGMA PI PI, SIGMA PI PI PI. P. EBERHARD, J. H. FRIEDMAN, M. PRIPSTEIN, AND R. R. ROSS.	26
SIGMA	SIGMA INTERACTIONS AND DECAYS. L. K. GERSHWIN.	28
SIGMA	STUDY OF SIGMA DECAY PARAMETERS. R. D. TRIPP, F. T. SOLMITZ, AND R. C. BANGERTER.	28
SIGMA	STUDY OF THE REACTION K-MINUS PROTON GOES TO SIGMA PLUSMINUS PI-MINUSPLUS. P. M. DAUBER AND A. BARBARO-GALTIERI.	27
SIGMA	1G4 NUCLEON-NUCLEON PHASE SHIFT AND THE SIGMA MESON. J. BINSTOCK.	16
SIGMA-K-NUCLEON	CALCULATION OF THE LAMBDA-K-NUCLEON AND SIGMA-K-NUCLEON COUPLING CONSTANTS G USING KAON-NUCLEON DISPERSION RELATIONS. T. W. ROGERS.	13
SIGMA-PLUS	SIGMA-PLUS MAGNETIC MOMENT. T. S. MAST AND L. K. GERSHWIN.	29
SIMMONS	BIOMEDICAL PROGRAMMING. D. BASINGER, D. HARRELL, C. HERRIN, R. HINKINS, W. HOGAN, H. HOLMES, M. HOROVITZ, T. MAHAN, E. SCHROEDER, M. SIMMONS, AND K. WILEY.	100
SIMMONS	MISCELLANEOUS PROGRAMMING. R. BELSHE, D. HARRELL, M. SIMMONS, K. WILEY, AND E. WILLIAMS.	103
SINCLAIR	BACKSCATTERED LASER BEAM AT SLAC. W. PODOLSKY, M. S. RABIN, J. J. MURRAY, P. KLEIN, AND C. K. SINCLAIR.	34

SKUJA	ETA-ZERO DECAY AND PI-ZERO PI-ZERO NEUTRON EXPERIMENTS. R. CHAFFEE, O. DAHL, R. W. KENNEY, J. NELSON, M. PRIPSTEIN, T. B. RISSER, A. SKUJA, AND M. A. WAHLIG.	59
SLAC	BACKSCATTERED LASER BEAM AT SLAC. W. PODOLSKY, M. S. RABIN, J. J. MURRAY, P. KLEIN, AND C. K. SINCLAIR.	34
SLAC	PHOTOPRODUCTION OF VECTOR MESONS AT SLAC. L. KAUFMAN, V. PEREZ-MENDEZ, A. W. STETZ, S. H. WILLIAMS, F. BULOS, R. DIEBOLD, R. LARSEN, D. LEITH, B. F. RICHTER, AND W. BUSZA.	62
SMITH	ANTIPROTON INTERACTIONS IN HYDROGEN AND DEUTERIUM. M. A. ABOLINS, A. RITTENBERG, AND G. A. SMITH.	31
SMITH	BP66 EXPERIMENT. J. A. ANDERSON AND D. B. SMITH.	31
SMITH	DEUTERON MISSING-MASS EXPERIMENT. M. A. ABOLINS, G. S. SMITH, L. H. SMITH, AND A. B. WICKLUND.	35
SMITH	EMULSION SPECTROGRAPH PROGRAM. L. W. ALVAREZ, A. H. BUFFINGTON, P. M. DAUBER, J. H. FRIEDMAN, M. ALSTON-GARNJOST, L. H. SMITH, F. T. SOLMITZ, M. L. STEVENSON, AND M. A. WAHLIG.	38
SMITH	HIGH-ALTITUDE PARTICLE PHYSICS AND COSMIC-RAY EXPERIMENTAL FACILITY. L. W. ALVAREZ, J. A. ANDERSON, A. H. BUFFINGTON, P. M. DAUBER, L. J. LLOYD, L. H. SMITH, AND M. A. WAHLIG.	36
SMITH	LOW-BACKGROUND COUNTING FACILITY. A. R. SMITH AND H. A. WOLLENBERG.	89
SMITH	NONSTRANGE INTERACTIONS IN PROTON-PROTON COLLISIONS AT 6.6 GEV/C. E. GELLERT AND G. A. SMITH.	32
SMITH	PI-MINUS HE3 INTERACTIONS. J. SPERINDE, B. M. SMITH, V. PEREZ-MENDEZ, AND D. FREDERICKSON.	63
SMITH	RADIOGEOLOGY. H. A. WOLLENBERG AND A. R. SMITH.	89
SMITH	SEARCH FOR A TWO-PI-ZERO RESONANCE NEAR 730 MEV IN PI-PLUS DEUTERON INTERACTIONS. R. J. MANNING AND G. A. SMITH.	31
SMITH	STRANGE-PARTICLE INTERACTIONS IN PROTON-PROTON COLLISIONS AT 5.5 GEV/C AND 6.6 GEV/C. A. B. WICKLUND AND G. A. SMITH.	33
SODING	LRL-SLAC EXPERIMENT ON PI-MINUS PROTON INELASTIC REACTIONS. B. DELER, L. R. PRICE, A. H. ROSENFELD, P. SODING, D. HERNDON, R. LONGACRE, D. LEITH, A. BRODY, AND B. SHEN.	33
SODING	PARTICLE DATA GROUP. A. H. ROSENFELD, N. BARASH-SCHMIDT, A. BARBARO-GALTIERI, O. BENARY, L. R. PRICE, P. SODING, AND C. G. WOHL.	44
SOLIDS	FUNDAMENTAL STUDIES OF TRACK FORMATION IN SOLIDS. H. H. HECKMAN AND R. M. WALKER.	54
SOLMITZ	EMULSION SPECTROGRAPH PROGRAM. L. W. ALVAREZ, A. H. BUFFINGTON, P. M. DAUBER, J. H. FRIEDMAN, M. ALSTON-GARNJOST, L. H. SMITH, F. T. SOLMITZ, M. L. STEVENSON, AND M. A. WAHLIG.	38
SOLMITZ	K82 EXPERIMENT. S. M. FLATTE, J. H. FRIEDMAN, A. BARBARO-GALTIERI, M. ALSTON-GARNJOST, G. R. LYNCH, M. S. RABIN, F. T. SOLMITZ, P. DAVIS, M. MATISON, N. UYEDA, AND V. WALUCH.	33
SOLMITZ	PI82 EXPERIMENT. S. M. FLATTE, J. H. FRIEDMAN, A. BARBARO-GALTIERI, M. ALSTON-GARNJOST, G. R. LYNCH, M. S. RABIN, F. T. SOLMITZ, P. DAVIS, M. MATISON, N. UYEDA, AND V. WALUCH.	34
SOLMITZ	STUDY OF SIGMA DECAY PARAMETERS. R. D. TRIPP, F. T. SOLMITZ, AND R. G. BANGERTER.	28
SOLMITZ	STUDY OF THE NEUTRAL K MESON. B. R. WEBBER, F. T. SOLMITZ, F. S. CRAWFORD, JR., AND M. ALSTON-GARNJOST.	30
SPACE-CHARGE	TRANSVERSE SPACE-CHARGE EFFECTS IN CIRCULAR ACCELERATORS. F. SACHERER.	19
SPARK CHAMBERS	SPARK CHAMBERS FOR THE MEDICAL PROGRAM. L. KAUFMAN, V. PEREZ-MENDEZ, J. SPERINDE, A. RINDI, AND H. WOLLENBERG.	64
SPARK CHAMBERS	WIRE SPARK CHAMBERS AND ELECTRONIC READOUTS. R. L. GROVE, G. L. STOKER, AND V. PEREZ-MENDEZ.	63
SPARK-CHAMBER	MEDICAL SPARK-CHAMBER PROJECT. A. RINDI AND H. A. WOLLENBERG.	89
SPARK-CHAMBER	SPARK-CHAMBER PROGRAMS, GROUP A.	43
SPECTRAL	PROGRAMMING FOR SPECTRAL ANALYSIS.	98
SPECTRAL-FUNCTION	T PRODUCTS AND SPECTRAL-FUNCTION SUM RULES IN A THEORY OF CURRENTS. W. BIERTER AND K. M. BITAR.	15
SPECTROGRAPH	EMULSION SPECTROGRAPH PROGRAM. L. W. ALVAREZ, A. H. BUFFINGTON, P. M. DAUBER, J. H. FRIEDMAN, M. ALSTON-GARNJOST, L. H. SMITH, F. T. SOLMITZ, M. L. STEVENSON, AND M. A. WAHLIG.	38

SPECTRUM	HIGH-ENERGY NEUTRON SPECTRUM MEASUREMENTS. H. H. HECKMAN AND H. W. PATTERSON.	54
SPERINDE	MEASUREMENT OF NEUTRON PROTON GOES TO GAMMA DEUTERON ANGULAR DISTRIBUTION AS A DIRECT TEST OF TIME REVERSAL IN THE ELECTROMAGNETIC INTERACTION. D. CHENG, V. PEREZ-MENDEZ, J. M. SPERINDE, J. A. HELLAND, B. L. SCHROCK, R. P. HADDOCK, J. DETOEUF, M. J. LONGO, S. WILSON, AND K. K. YOUNG.	63
SPERINDE	PI-MINUS HE3 INTERACTIONS. J. SPERINDE, B. M. SMITH, V. PEREZ-MENDEZ, AND D. FREDERICKSON.	63
SPERINDE	PROTON-HE SCATTERING EXPERIMENT. A. W. STETZ, V. PEREZ-MENDEZ, AND J. M. SPERINDE.	62
SPERINDE	SPARK CHAMBERS FOR THE MEDICAL PROGRAM. L. KAUFMAN, V. PEREZ-MENDEZ, J. SPERINDE, A. RINDI, AND H. WOLLENBERG.	64
SPIN	VENEZIANO-SUZUKI MODEL WITH SPIN. S. MANDELSTAM.	3
SPINOR	CALCULATION OF SCATTERING WITH A SPINOR BETHE-SALPETER EQUATION. B. C. MCINNIS.	9
SPINS	ON INTERACTING LOCAL QUANTUM FIELDS DESCRIBING MANY MASSES AND SPINS. W. BIERTER AND K. M. BITAR.	15
SPIRAL-READER	SPIRAL-READER PROGRAMS, GROUP A.	42
STABILITY	STABILITY OF SUPERHEAVY NUCLEI AND THEIR POSSIBLE OCCURRENCE IN NATURE. C.-F. TSANG AND S. G. NILSSON.	18
STAFF	PHYSICS RESEARCH STAFF.	135
STAPP	DERIVATION OF THE CUTKOSKY FORMULA. J. COSTER AND H. P. STAPP.	16
STAPP	MACROSCOPIC CAUSALITY AND ANALYTICITY PROPERTIES OF THE S MATRIX. D. IAGOLNITZER AND H. P. STAPP.	17
STEINER	POLARIZATION IN PI-PLUS PROTON AND PI-MINUS PROTON ELASTIC SCATTERING FROM 250 MEV TO 410 MEV. W. GORN, C. MOREHOUSE, T. POWELL, P. ROBRISH, S. ROCK, S. SHANNON, H. STEINER, AND H. WEISBERG.	76
STENGER	K-ZERO L GOES TO 2 PI-ZERO. A. C. HELMHOLZ, R. W. KENNEY, I. R. LINSCOTT, B. J. MOYER, W. P. OLIVER, S. I. PARKER, C. A. REY, R. J. CENCE, B. D. JONES, V. Z. PETERSON, V. J. STENGER, AND J. WILSON.	61
STEPHENS	CONTINUING PROJECT -- 88-INCH-CYCLOTRON CAVE-4 SHIELDING STUDIES. L. D. STEPHENS.	90
STETZ	PHOTOPRODUCTION OF VECTOR MESONS AT SLAC. L. KAUFMAN, V. PEREZ-MENDEZ, A. W. STETZ, S. H. WILLIAMS, F. BULOS, R. DIEBOLD, R. LARSEN, D. LEITH, B. F. RICHTER, AND W. BUSZA.	62
STETZ	PROTON-HE SCATTERING EXPERIMENT. A. W. STETZ, V. PEREZ-MENDEZ, AND J. M. SPERINDE.	62
STEVENS	SYSTEMS PROGRAMMING. E. BEALS, W. BENSON, J. BORGES, D. BRAINARD, M. CLINNICK, W. DEMPSTER, R. FINK, R. FRIEDMAN, J. GLASNER, W. HUTCHINSON, J. JOHNSTON, J. KNIGHT, S. PENNY, D. STEVENS, AND R. TRACY.	103
STEVENSON	EMULSION SPECTROGRAPH PROGRAM. L. W. ALVAREZ, A. H. BUFFINGTON, P. M. DAUBER, J. H. FRIEDMAN, M. ALSTON-GARNJOST, L. H. SMITH, F. T. SOLMITZ, M. L. STEVENSON, AND M. A. WAHLIG.	38
STEVENSON	LRL-SLAC COSMIC-RAY EXPERIMENT. S. M. FLATTE, M. L. STEVENSON, R. DECOSTER, W. TONER, AND T. ZIPF.	38
STIENING	RARE DECAYS OF CHARGED K MESONS. R. HILDEBRAND, R. STIENING, AND C. WIEGAND.	73
STOKER	WIRE SPARK CHAMBERS AND ELECTRONIC READOUTS. R. L. GROVE, G. L. STOKER, AND V. PEREZ-MENDEZ.	63
STOPPED	RADIATIVE CAPTURE OF STOPPED PI-MINUS MESONS ON NUCLEI. K. M. CROWE, A. S. L. PARSONS, AND P. TRUOEL.	47
STOPPING-POWER	STOPPING-POWER DIFFERENCES OF CHARGED PIONS IN EMULSION. H. H. HECKMAN.	54
STORAGE	MASS STORAGE SYSTEM.	104
STORAGE	PROGRAM STORAGE SYSTEM.	104
STRANGE-PARTICLE	STRANGE-PARTICLE INTERACTIONS IN PROTON-PROTON COLLISIONS AT 5.5 GEV/C AND 6.6 GEV/C. A. B. WICKLUND AND G. A. SMITH.	33
STRANGE-PARTICLE	STUDY OF THE STRANGE-PARTICLE CHANNELS IN PI-PLUS PROTON BETWEEN 1.3 GEV/C AND 1.65 GEV/C. G. BORREANI, G. KALMUS, AND J. LOUIE.	68
STRONG-COUPLING	CALCULATION OF STRONG-COUPLING-CONSTANT SHIFTS. M. K. AU-YANG.	13
SUGAWARA'S	SUGAWARA'S THEORY OF CURRENTS. A. RABL.	10
SUM	AN I=1 PION-PION SUM RULE AND THE DERIVATIVE OF THE S-WAVE AMPLITUDES. S. Y. CHU AND B. R. DESAI.	12
SUM	COMPTON-SCATTERING SUM RULES. G. C. FOX AND D. Z. FREEDMAN.	12

SUM	DO FINITE-ENERGY SUM RULES IN PION PHOTOPRODUCTION PROVE THE EXISTENCE OF A PION CONSPIRACY. J. D. JACKSON AND C. QUIGG.	2
SUM	FINITE-ENERGY SUM RULES AND THE PROCESS ZERO-MINUS + ZERO-MINUS GOES TO ZERO-MINUS + ZERO-MINUS. C. SCHMID AND J. YELLIN.	12
SUM	PION CONSPIRACY AND CONTINUOUS-MOMENT SUM RULES. R. L. THEWS.	12
SUM	T PRODUCTS AND SPECTRAL-FUNCTION SUM RULES IN A THEORY OF CURRENTS. W. BIERTER AND K. M. BITAR.	15
SUMS	SUMS OF DIRECT-CHANNEL REGGE-POLE CONTRIBUTIONS AND CROSSING SYMMETRY. N. N. KHURI.	2
SUPERCONDUCTIVITY	SUPERCONDUCTIVITY.	115
SUPERHEAVY	STABILITY OF SUPERHEAVY NUCLEI AND THEIR POSSIBLE OCCURRENCE IN NATURE. C.-F. TSANG AND S. G. NILSSON.	18
SUPPORT	SUPPORT PROGRAMS, GROUP A.	43
SURKO	NUCLEON-NUCLEON TRIPLE SCATTERING. C. M. ANKENBRANDT, D. CHENG, L. T. KERTH, K. C. LEUNG, B. MACDONALD, AND P. T. SURKO.	58
SWIATECKI	AVERAGE NUCLEAR PROPERTIES. W. D. MYERS AND W. J. SWIATECKI.	18
SYMMETRY	SUMS OF DIRECT-CHANNEL REGGE-POLE CONTRIBUTIONS AND CROSSING SYMMETRY. N. N. KHURI.	2
SYNCHROTRON	NAL BOOSTER SYNCHROTRON.	115
T	SEARCH FOR T VIOLATION IN INELASTIC ELECTRON-PROTON SCATTERING. O. CHAMBERLAIN, G. SHAPIRO, H. WEISBERG, P. ROBRISH, S. ROCK, S. SHANNON, R. TAYLOR, L. MO, E. BLOOM, J. LITT, H. KENDALL, AND J. FRIEDMAN.	76
T	THE NEW MULTIPERIPHERAL MODEL IN S , T VARIABLE. P. D. TING.	1
T PRODUCTS	T PRODUCTS AND SPECTRAL-FUNCTION SUM RULES IN A THEORY OF CURRENTS. W. BIERTER AND K. M. BITAR.	15
T=0	REGGE-POLE EXPANSION AT T=0. J. H. WEIS.	6
TAN	A MODEL OF INDEFINITELY RISING TRAJECTORIES. S.-Y. CHU, C.-I. TAN, AND P. D. TING.	4
TAN	THE POMERANCHON AS A MIRAGE TRAJECTORY. S.-Y. CHU, C.-I. TAN, AND P. D. TING.	8
TARGET	POLARIZED-PROTON TARGET IMPROVEMENTS. O. CHAMBERLAIN, W. GORN, C. MOREHOUSE, T. POWELL, P. ROBRISH, S. ROCK, S. SHANNON, G. SHAPIRO, AND H. WEISBERG.	77
TAYLOR	SEARCH FOR T VIOLATION IN INELASTIC ELECTRON-PROTON SCATTERING. O. CHAMBERLAIN, G. SHAPIRO, H. WEISBERG, P. ROBRISH, S. ROCK, S. SHANNON, R. TAYLOR, L. MO, E. BLOOM, J. LITT, H. KENDALL, AND J. FRIEDMAN.	76
TEMPLE	PARTIAL CAPTURE RATES OF MUONS BY OXYGEN-16 LEADING TO EXCITED NUCLEAR STATES OF NITROGEN-15. S. N. KAPLAN, R. V. PYLE, L. E. TEMPLE, AND G. F. VALBY.	59
THEOREMS	LOW-ENERGY THEOREMS AND THE POMERANCHUK TRAJECTORY FOR COMPTON SCATTERING. F. ARBAB AND R. C. BROWER.	14
THEORIES	THEORIES AT INFINITE MOMENTUM. K. BARDAKCI AND M. B. HALPERN.	10
THEWS	PION CONSPIRACY AND CONTINUOUS-MOMENT SUM RULES. R. L. THEWS.	12
THIEBAUX	REGGEIZATION OF EXTERNAL PARTICLES. M. L. THIEBAUX.	7
THREE-BODY	DOUBLE PERIPHERAL MODEL FOR THREE-BODY FINAL-STATE REACTIONS. E. L. BERGER.	3
TIME REVERSAL	MEASUREMENT OF NEUTRON PROTON GOES TO GAMMA DEUTERON ANGULAR DISTRIBUTION AS A DIRECT TEST OF TIME REVERSAL IN THE ELECTROMAGNETIC INTERACTION. D. CHENG, V. PEREZ-MENDEZ, J. M. SPERINDE, J. A. HELLAND, B. L. SCHROCK, R. P. HADDOCK, J. DETOEUF, M. J. LONGO, S. WILSON, AND K. K. YOUNG.	63
TIME-SHARING	INTERACTIVE TIME-SHARING SYSTEM.	105
TING	A MODEL OF INDEFINITELY RISING TRAJECTORIES. S.-Y. CHU, C.-I. TAN, AND P. D. TING.	4
TING	THE NEW MULTIPERIPHERAL MODEL IN S , T VARIABLE. P. D. TING.	1
TING	THE POMERANCHON AS A MIRAGE TRAJECTORY. S.-Y. CHU, C.-I. TAN, AND P. D. TING.	8
TING	WHY THE TOTAL NUCLEON-ANTINUCLEON CROSS SECTION IS LARGER THAN THE TOTAL NUCLEON-NUCLEON CROSS SECTION AT NONASYMPTOTIC INCIDENT ENERGY. P. D. TING.	7
TONER	LRL-SLAC COSMIC-RAY EXPERIMENT. S. M. FLATTE, M. L. STEVENSON, R. DECOSTER, W. TONER, AND T. ZIPF.	38
TRACK	FUNDAMENTAL STUDIES OF TRACK FORMATION IN SOLIDS. H. H. HECKMAN AND R. M. WALKER.	54

TRACY	SYSTEMS PROGRAMMING. E. BEALS, W. BENSON, J. BORGES, D. BRAINARD, M. CLINNICK, W. DEMPSTER, R. FINK, R. FRIEDMAN, J. GLASNER, W. HUTCHINSON, J. JOHNSTON, J. KNIGHT, S. PENNY, D. STEVENS, AND R. TRACY.	103
TRAJECTORIES	A MODEL OF INDEFINITELY RISING TRAJECTORIES. S.-Y. CHU, C.-I. TAN, AND P. D. TING.	4
TRAJECTORIES	GENERAL PARAMETERIZATION OF REGGE RESIDUES AND TRAJECTORIES. S. KLEIN.	5
TRAJECTORIES	REGGE TRAJECTORIES. K. H. WANG.	3
TRAJECTORY	LOW-ENERGY THEOREMS AND THE POMERANCHUK TRAJECTORY FOR COMPTON SCATTERING. F. ARBAB AND R. C. BROWER.	14
TRAJECTORY	THE POMERANCHON AS A MIRAGE TRAJECTORY. S.-Y. CHU, C.-I. TAN, AND P. D. TING.	8
TRANSVERSE	TRANSVERSE SPACE-CHARGE EFFECTS IN CIRCULAR ACCELERATORS. F. SACHERER.	19
TRAPPED	LOW-ALTITUDE GEOMAGNETICALLY TRAPPED PROTONS. H. H. HECKMAN.	53
TRILLING	K-PLUS DEUTERON INTERACTIONS FROM 860 MEV/C TO 1580 MEV/C. R. W. BLAND, A. A. HIRATA, G. GOLDHABER, V. H. SEEGER, G. H. TRILLING, AND C. G. WOHL.	81
TRILLING	LAMBDA-ZERO PROTON INTERACTIONS. G. ALEXANDER, P. GAPOSCHKIN, J. A. KADYK, AND G. H. TRILLING.	82
TRILLING-GOLDHABER	APPLICATIONS PROGRAMMING FOR TRILLING-GOLDHABER GROUP. R. AHLSTRAND, D. ARMSTRONG, E. BURNS, B. HALL, D. LAMB, AND J. MILLER.	94
TRILLING-GOLDHABER	PUBLICATIONS -- TRILLING-GOLDHABER.	83
TRIPLE	NUCLEON-NUCLEON TRIPLE SCATTERING. C. M. ANKENBRANDT, D. CHENG, L. T. KERTH, K. C. LEUNG, B. MACDONALD, AND P. T. SURKO.	58
TRIPP	CHARGE-EXCHANGE (K-MINUS PROTON GOES TO ANTIK-ZERO NEUTRON) AND ELASTIC (K-MINUS PROTON GOES TO K-MINUS PROTON) REACTIONS. T. S. MAST, R. BANGERTER, A. BARBARO-GALTIERI, AND R. D. TRIPP.	29
TRIPP	DIRECT EVIDENCE FOR THE MULTIPLET ASSIGNMENTS OF LAMBDA(1520) AND LAMBDA(1405). R. D. TRIPP, R. O. BANGERTER, A. BARBARO-GALTIERI, AND T. S. MAST.	28
TRIPP	K-MINUS PROTON GOES TO LAMBDA PI-PLUS PI-MINUS AND K-MINUS PROTON GOES TO LAMBDA + MISSING MASS. T. S. MAST, A. BARBARO-GALTIERI, AND R. D. TRIPP.	29
TRIPP	STUDY OF SIGMA DECAY PARAMETERS. R. D. TRIPP, F. T. SOLMITZ, AND R. O. BANGERTER.	28
TRIPP	THE REACTIONS K-MINUS PROTON GOES TO ANTIK-ZERO NEUTRON AND K-MINUS PROTON GOES TO LAMBDA PI-ZERO. S. M. FLATTE, A. BARBARO-GALTIERI, R. D. TRIPP, AND C. G. WOHL.	26
TRIST	TRIST -- SYSTEM MONITOR. P. DAVIS AND C. OSBORNE.	110
TRUOEL	MEASUREMENT OF THE DIFFERENTIAL CROSS SECTION FOR PI-MINUS PROTON GOES TO NEUTRON GAMMA BETWEEN 500-MEV AND 1200-MEV PION ENERGIES. K. M. CROWE, A. FAINBERG, A. S. L. PARSONS, P. TRUOEL, R. P. HADDOCK, B. M. K. NEFKENS, L. J. VERHEY, A. WEISS, AND M. E. ZELLER.	50
TRUOEL	MEASUREMENT OF THE DIFFERENTIAL CROSS SECTION FOR PI-MINUS PROTON GOES TO NEUTRON GAMMA AT 200 MEV, 320 MEV, AND 370 MEV. A. S. L. PARSONS, P. TRUOEL, P. BERARDO, R. P. HADDOCK, J. A. HELLAND, B. M. K. NEFKENS, L. VERHEY, AND M. E. ZELLER.	47
TRUOEL	RADIATIVE CAPTURE OF STOPPED PI-MINUS MESONS ON NUCLEI. K. M. CROWE, A. S. L. PARSONS, AND P. TRUOEL.	47
TSANG	STABILITY OF SUPERHEAVY NUCLEI AND THEIR POSSIBLE OCCURRENCE IN NATURE. C. F. TSANG AND S. G. NILSSON.	18
TWO-PI-ZERO	SEARCH FOR A TWO-PI-ZERO RESONANCE NEAR 730 MEV IN PI-PLUS DEUTERON INTERACTIONS. R. J. MANNING AND G. A. SMITH.	31
TWO-PRONG	TWO-PRONG EVENTS IN PI-PLUS PROTON FILM BETWEEN 1.3 GEV/C AND 1.85 GEV/C. R. W. BIRGE AND G. E. KALMUS.	69
TYPOGRAPHY	COMPUTER TYPOGRAPHY.	105
TYSON	APPLICATIONS PROGRAMMING FOR POWELL-BIRGE GROUP. H. C. ALBRECHT, M. H. MYERS, J. TYSON, AND J. VISSER, JR.	93
TYSON	APPLICATIONS PROGRAMMING FOR LOFGREN PHYSICS GROUP. J. P. TYSON, L. D. WILSON, AND D. H. ZURLINDEN.	96
UNITARITY	MULTIPERIPHERAL UNITARITY AWAY FROM THE FORWARD DIRECTION. M. N. MISHELOFF.	1
UYEDA	K82 EXPERIMENT. S. M. FLATTE, J. H. FRIEDMAN, A. BARBARO-GALTIERI, M. ALSTON-GARNJOST, G. R. LYNCH, M. S. RABIN, F. T. SOLMITZ, P. DAVIS, M. MATISON, N. UYEDA, AND V. WALUCH.	33
UYEDA	PI82 EXPERIMENT. S. M. FLATTE, J. H. FRIEDMAN, A. BARBARO-GALTIERI, M. ALSTON-GARNJOST, G. R. LYNCH, M. S. RABIN, F. T. SOLMITZ, P. DAVIS, M. MATISON, N. UYEDA, AND V. WALUCH.	34

VALBY	PARTIAL CAPTURE RATES OF MUONS BY OXYGEN-16 LEADING TO EXCITED NUCLEAR STATES OF NITROGEN-15. S. N. KAPLAN, R. V. PYLE, L. E. TEMPLE, AND G. F. VALBY.	59
VALE	184-INCH CYCLOTRON. J. VALE.	129
VAN ATTA	PLASMA PHYSICS -- VAN ATTA.	85
VAN ATTA	PUBLICATIONS -- VAN ATTA.	85
VARDAS	RESEARCH IN MATHEMATICS AND COMPUTER SCIENCE. W. BENSON, P. CONCUS, H. HANERFELD, D. JENSON, L. MEISSNER, G. NOONEY, AND L. VARDAS.	105
VECTOR	PHOTOPRODUCTION OF VECTOR MESONS AT SLAC. L. KAUFMAN, V. PEREZ-MENDEZ, A. W. STETZ, S. H. WILLIAMS, F. BULOS, R. DIEBOLD, R. LARSEN, D. LEITH, B. F. RICHTER, AND W. BUSZA.	62
VECTOR-MESON	STUDY OF VECTOR-MESON PHOTOPRODUCTION. W. PODOLSKY, M. S. RABIN, A. H. ROSENFELD, AND R. WINDMOLDERS.	34
VENEZIANO-SUZUKI	VENEZIANO-SUZUKI MODEL WITH SPIN. S. MANDELSTAM.	3
VERHEY	MEASUREMENT OF THE DIFFERENTIAL CROSS SECTION FOR PI-MINUS PROTON GOES TO NEUTRON GAMMA BETWEEN 500-MEV AND 1200-MEV PION ENERGIES. K. M. CROWE, A. FAINBERG, A. S. L. PARSONS, P. TRUOEL, R. P. HADDOCK, B. M. K. NEFKENS, L. J. VERHEY, A. WEISS, AND M. E. ZELLER.	50
VERHEY	MEASUREMENT OF THE DIFFERENTIAL CROSS SECTION FOR PI-MINUS PROTON GOES TO NEUTRON GAMMA AT 200 MEV, 320 MEV, AND 370 MEV. A. S. L. PARSONS, P. TRUOEL, P. BERARDO, R. P. HADDOCK, J. A. HELLAND, B. M. K. NEFKENS, L. VERHEY, AND M. E. ZELLER.	47
VIOLATION	SEARCH FOR T VIOLATION IN INELASTIC ELECTRON-PROTON SCATTERING. O. CHAMBERLAIN, G. SHAPIRO, H. WEISBERG, P. ROBRISH, S. ROCK, S. SHANNON, R. TAYLOR, L. MO, E. BLOOM, J. LITT, H. KENDALL, AND J. FRIEDMAN.	76
VISSER, JR	APPLICATIONS PROGRAMMING FOR POWELL-BIRGE GROUP. H. C. ALBRECHT, M. H. MYERS, J. TYSON, AND J. VISSER, JR.	93
WAHLIG	EMULSION SPECTROGRAPH PROGRAM. L. W. ALVAREZ, A. H. BUFFINGTON, P. M. DAUBER, J. H. FRIEDMAN, M. ALSTON-GARNJOST, L. H. SMITH, F. T. SOLMITZ, M. L. STEVENSON, AND M. A. WAHLIG.	38
WAHLIG	ETA-ZERO DECAY AND PI-ZERO PI-ZERO NEUTRON EXPERIMENTS. R. CHAFFEE, O. DAHL, R. W. KENNEY, J. NELSON, M. PRIPSTEIN, T. B. RISSER, A. SKUJA, AND M. A. WAHLIG.	59
WAHLIG	HIGH-ALTITUDE PARTICLE PHYSICS AND COSMIC-RAY EXPERIMENTAL FACILITY. L. W. ALVAREZ, J. A. ANDERSON, A. H. BUFFINGTON, P. M. DAUBER, L. J. LLOYD, L. H. SMITH, AND M. A. WAHLIG.	36
WALIG	PROGRAM IN COLLABORATION WITH MOYER-HELMHOLZ GROUP. O. I. DAHL, M. PRIPSTEIN, AND M. WALIG.	34
WALKER	FUNDAMENTAL STUDIES OF TRACK FORMATION IN SOLIDS. H. H. HECKMAN AND R. M. WALKER.	54
WALLACE	RANGES AND STOPPING POWER OF HEAVY IONS IN NONGASEOUS MEDIA. R. W. WALLACE.	91
WALUCH	K82 EXPERIMENT. S. M. FLATTE, J. H. FRIEDMAN, A. BARBARO-GALTIERI, M. ALSTON-GARNJOST, G. R. LYNCH, M. S. RABIN, F. T. SOLMITZ, P. DAVIS, M. MATISON, N. UYEDA, AND V. WALUCH.	33
WALUCH	PI82 EXPERIMENT. S. M. FLATTE, J. H. FRIEDMAN, A. BARBARO-GALTIERI, M. ALSTON-GARNJOST, G. R. LYNCH, M. S. RABIN, F. T. SOLMITZ, P. DAVIS, M. MATISON, N. UYEDA, AND V. WALUCH.	34
WANG	CROSSING MATRIX FOR THE HELICITY AMPLITUDES OF $A + B \rightarrow 1 + 2 + 3$. C. K. CHEN AND K. H. WANG.	16
WANG	REGGE TRAJECTORIES. K. H. WANG.	3
WATSON	REARRANGEMENT COLLISIONS BETWEEN SLOW ATOMS AND IONS. J. C. CHEN AND K. M. WATSON.	20
WAVE	RELATIVISTIC WAVE EQUATIONS FOR STRONG INTERACTIONS. C. ZEMACH.	8
WEBBER	STUDY OF THE NEUTRAL K MESON. B. R. WEBBER, F. T. SOLMITZ, F. S. CRAWFORD, JR., AND M. ALSTON-GARNJOST.	30
WEBER	DATA REDUCTION. R. W. BIRGE AND P. W. WEBER.	69
WEBER	ON-LINE SYSTEM. R. W. BIRGE AND P. W. WEBER.	69
WEIBEL-KAHN	QUASILINEAR EVOLUTION OF THE WEIBEL-KAHN INSTABILITY. N. ALBRIGHT.	20
WEIS	REGGE-POLE EXPANSION AT T=0. J. H. WEIS.	6
WEISBERG	POLARIZATION IN BACKWARD NEUTRON-PROTON SCATTERING AT 3 GEV TO 6 GEV. P. ROBRISH, O. CHAMBERLAIN, R. D. FIELD, JR., R. Z. FUZESY, M. J. LONGO, C. MOREHOUSE, T. POWELL, S. ROCK, S. SHANNON, G. SHAPIRO, AND H. WEISBERG.	77

WEISBERG	POLARIZATION IN PI-PLUS PROTON AND PI-MINUS PROTON ELASTIC SCATTERING FROM 250 MEV TO 410 MEV. W. GORN, C. MOREHOUSE, T. POWELL, P. ROBRISH, S. ROCK, S. SHANNON, H. STEINER, AND H. WEISBERG.	76
WEISBERG	POLARIZED-PROTON TARGET IMPROVEMENTS. O. CHAMBERLAIN, W. GORN, C. MOREHOUSE, T. POWELL, P. ROBRISH, S. ROCK, S. SHANNON, G. SHAPIRO, AND H. WEISBERG.	77
WEISBERG	SEARCH FOR T VIOLATION IN INELASTIC ELECTRON-PROTON SCATTERING. O. CHAMBERLAIN, G. SHAPIRO, H. WEISBERG, P. ROBRISH, S. ROCK, S. SHANNON, R. TAYLOR, L. MO, E. BLOOM, J. LITT, H. KENDALL, AND J. FRIEDMAN.	76
WEISS	MEASUREMENT OF THE DIFFERENTIAL CROSS SECTION FOR PI-MINUS PROTON GOES TO NEUTRON GAMMA BETWEEN 500-MEV AND 1200-MEV PION ENERGIES. K. M. CROWE, A. FAINBERG, A. S. L. PARSONS, P. TRUOEL, R. P. HADDOCK, B. M. K. NEFKENS, L. J. VERHEY, A. WEISS, AND M. E. ZELLER.	50
WENZEL	DIBOSON PRODUCTION BY 2-GEV/C PIONS. A. R. CLARK, B. CORK, T. ELIOFF, L. T. KERTH, T. N. RANGASWAMY, AND W. A. WENZEL.	57
WENZEL	MEASUREMENT OF THE (K-PLUS GOES TO POSITRON NU)/(K-PLUS GOES TO MU-PLUS NU) BRANCHING RATIO. A. R. CLARK, B. CORK, T. ELIOFF, D. NEWTON, L. T. KERTH, J. F. MCREYNOLDS, AND W. A. WENZEL.	57
WENZEL	NEUTRAL LEPTONIC CURRENTS. A. R. CLARK, T. ELIOFF, R. C. FIELD, H. J. FRISCH, R. P. JOHNSON, D. KEEFE, L. T. KERTH, M. H. KRIEGER, D. NEWTON, AND W. A. WENZEL.	57
WHITE	DAPR -- FULLY AUTOMATIC EVENT SCANNING AND MEASUREMENT. B. BRITTON, J. FRANZ, W. S. GEE, D. HALL, L. JONTULOVICH, H. WHITE, AND F. WINDORSKI.	110
WHITE	DATA HANDLING -- WHITE.	109
WHITE	DATA PROCESSING -- WHITE.	112
WHITE	PUBLICATIONS -- WHITE.	113
WICKLUND	DEUTERON MISSING-MASS EXPERIMENT. M. A. ABOLINS, G. S. SMITH, L. H. SMITH, AND A. B. WICKLUND.	35
WICKLUND	STRANGE-PARTICLE INTERACTIONS IN PROTON-PROTON COLLISIONS AT 5.5 GEV/C AND 6.6 GEV/C. A. B. WICKLUND AND G. A. SMITH.	33
WIEGAND	K-MINUS MESIC ATOMS. C. WIEGAND AND R. KUNSELMAN.	73
WIEGAND	OBSERVATION OF DELTA-MINUS HYPERONIC ATOMS. C. WIEGAND.	73
WIEGAND	RARE DECAYS OF CHARGED K MESONS. R. HILDEBRAND, R. STIENING, AND C. WIEGAND.	73
WILEY	BIOMEDICAL PROGRAMMING. D. BASINGER, D. HARRELL, C. HERRIN, R. HINKINS, W. HOGAN, H. HOLMES, M. HOROVITZ, T. MAHAN, E. SCHROEDER, M. SIMMONS, AND K. WILEY.	100
WILEY	MISCELLANEOUS PROGRAMMING. R. BELSHE, D. HARRELL, M. SIMMONS, K. WILEY, AND E. WILLIAMS.	103
WILLIAMS	MISCELLANEOUS PROGRAMMING. R. BELSHE, D. HARRELL, M. SIMMONS, K. WILEY, AND E. WILLIAMS.	103
WILLIAMS	PHOTOPRODUCTION OF VECTOR MESONS AT SLAC. L. KAUFMAN, V. PEREZ-MENDEZ, A. W. STETZ, S. H. WILLIAMS, F. BULOS, R. DIEBOLD, R. LARSEN, D. LEITH, B. F. RICHTER, AND W. BUSZA.	62
WILLIAMS	WEAK ASYMPTOTIC CAUSALITY OF THE HAAG-RUELLE S MATRIX. D. N. WILLIAMS.	17
WILSON	APPLICATIONS PROGRAMMING FOR LOFGREN PHYSICS GROUP. J. P. TYSON, L. D. WILSON, AND D. H. ZURLINDEN.	96
WILSON	APPLICATIONS PROGRAMMING FOR MOYER-HELMHOLZ GROUP. F. GEY, R. HINKINS, AND L. WILSON.	96
WILSON	K-ZERO L GOES TO 2 PI-ZERO. A. C. HELMHOLZ, R. W. KENNEY, I. R. LINSCOTT, B. J. MOYER, W. P. OLIVER, S. I. PARKER, C. A. REY, R. J. CENCE, B. D. JONES, V. Z. PETERSON, V. J. STENGER, AND J. WILSON.	61
WILSON	MEASUREMENT OF NEUTRON PROTON GOES TO GAMMA DEUTERON ANGULAR DISTRIBUTION AS A DIRECT TEST OF TIME REVERSAL IN THE ELECTROMAGNETIC INTERACTION. D. CHENG, V. PEREZ-MENDEZ, J. M. SPERINDE, J. A. HELLAND, B. L. SCHROCK, R. P. HADDOCK, J. DETOEUF, M. J. LONGO, S. WILSON, AND K. K. YOUNG.	63
WINDMOLDERS	STUDY OF VECTOR-MESON PHOTOPRODUCTION. W. PODOLSKY, M. S. RABIN, A. H. ROSENFELD, AND R. WINDMOLDERS.	34
WINDORSKI	DAPR -- FULLY AUTOMATIC EVENT SCANNING AND MEASUREMENT. B. BRITTON, J. FRANZ, W. S. GEE, D. HALL, L. JONTULOVICH, H. WHITE, AND F. WINDORSKI.	110
WINDORSKI	FOF -- GEOMETRY, KINEMATICAL ANALYSIS, DATA DISPLAY. M. BLOCK, S. BUCKMAN, D. CHRISLER, V. MORGAN, AND F. WINDORSKI.	110

WIRE	WIRE SPARK CHAMBERS AND ELECTRONIC READOUTS. R. L. GROVE, G. L. STOKER, AND V. PEREZ-MENDEZ.	63
WOHL	K-PLUS DEUTERON INTERACTIONS FROM 860 MEV/C TO 1580 MEV/C. R. W. BLAND, A. A. HIRATA, G. GOLDHABER, V. H. SEEGER, G. H. TRILLING, AND C. G. WOHL.	81
WOHL	PARTICLE DATA GROUP. A. H. ROSENFELD, N. BARASH-SCHMIDT, A. BARBARO-GALTIERI, O. BENARY, L. R. PRICE, P. SODING, AND C. G. WOHL.	44
WOHL	THE REACTIONS K-MINUS PROTON GOES TO ANTIK-ZERO NEUTRON AND K-MINUS PROTON GOES TO LAMBDA PI-ZERO. S. M. FLATTE, A. BARBARO-GALTIERI, R. D. TRIPP, AND C. G. WOHL.	26
WOLLENBERG	LOW-BACKGROUND COUNTING FACILITY. A. R. SMITH AND H. A. WOLLENBERG.	89
WOLLENBERG	MEDICAL SPARK-CHAMBER PROJECT. A. RINDI AND H. A. WOLLENBERG.	89
WOLLENBERG	RADIOGEOLOGY. H. A. WOLLENBERG AND A. R. SMITH.	89
WOLLENBERG	SPARK CHAMBERS FOR THE MEDICAL PROGRAM. L. KAUFMAN, V. PEREZ-MENDEZ, J. SPERINDE, A. RINDI, AND H. WOLLENBERG.	64
WRITTEN	GROUP A PROGRAMMING NOTES WRITTEN DURING THIS PERIOD.	43
YELLIN	A MODEL FOR PION-PION SCATTERING. J. SHAPIRO AND J. YELLIN.	3
YELLIN	FINITE-ENERGY SUM RULES AND THE PROCESS ZERO-MINUS + ZERO-MINUS GOES TO ZERO-MINUS + ZERO-MINUS. C. SCHMID AND J. YELLIN.	12
YOUNG	MEASUREMENT OF NEUTRON PROTON GOES TO GAMMA DEUTERON ANGULAR DISTRIBUTION AS A DIRECT TEST OF TIME REVERSAL IN THE ELECTROMAGNETIC INTERACTION. D. CHENG, V. PEREZ-MENDEZ, J. M. SPERINDE, J. A. HELLAND, B. L. SCHROCK, R. P. HADDOCK, J. DETOEUF, M. J. LONGO, S. WILSON, AND K. K. YOUNG.	63
ZELLER	MEASUREMENT OF THE DIFFERENTIAL CROSS SECTION FOR PI-MINUS PROTON GOES TO NEUTRON GAMMA BETWEEN 500-MEV AND 1200-MEV PION ENERGIES. K. M. CROWE, A. FAINBERG, A. S. L. PARSONS, P. TRUOEL, R. P. HADDOCK, B. M. K. NEFKENS, L. J. VERHEY, A. WEISS, AND M. E. ZELLER.	50
ZELLER	MEASUREMENT OF THE DIFFERENTIAL CROSS SECTION FOR PI-MINUS PROTON GOES TO NEUTRON GAMMA AT 200 MEV, 320 MEV, AND 370 MEV. A. S. L. PARSONS, P. TRUOEL, P. BERARDO, R. P. HADDOCK, J. A. HELLAND, B. M. K. NEFKENS, L. VERHEY, AND M. E. ZELLER.	47
ZEMACH	RELATIVISTIC WAVE EQUATIONS FOR STRONG INTERACTIONS. C. ZEMACH.	8
ZERO-MINUS	FINITE-ENERGY SUM RULES AND THE PROCESS ZERO-MINUS + ZERO-MINUS GOES TO ZERO-MINUS + ZERO-MINUS. C. SCHMID AND J. YELLIN.	12
ZIPF	LRL-SLAC COSMIC-RAY EXPERIMENT. S. M. FLATTE, M. L. STEVENSON, R. DECOSTER, W. TONER, AND T. ZIPF.	38
ZURLINDEN	APPLICATIONS PROGRAMMING FOR LOFGREN PHYSICS GROUP. J. P. TYSON, L. D. WILSON, AND D. H. ZURLINDEN.	96
1.1 GEV/C	PI-PLUS DEUTERON INTERACTIONS FROM 1.1 GEV/C TO 2.3 GEV/C. M. A. ABOLINS, O. I. DAHL, G. DANBURG, D. DAVIES, AND R. RADER.	30
1.3 GEV/C	STUDY OF THE STRANGE-PARTICLE CHANNELS IN PI-PLUS PROTON BETWEEN 1.3 GEV/C AND 1.65 GEV/C. G. BORREANI, G. KALMUS, AND J. LOUIE.	68
1.3 GEV/C	TWO-PRONG EVENTS IN PI-PLUS PROTON FILM BETWEEN 1.3 GEV/C AND 1.85 GEV/C. R. W. BIRGE AND G. E. KALMUS.	69
1.65 GEV/C	STUDY OF THE STRANGE-PARTICLE CHANNELS IN PI-PLUS PROTON BETWEEN 1.3 GEV/C AND 1.65 GEV/C. G. BORREANI, G. KALMUS, AND J. LOUIE.	68
1.85 GEV/C	TWO-PRONG EVENTS IN PI-PLUS PROTON FILM BETWEEN 1.3 GEV/C AND 1.85 GEV/C. R. W. BIRGE AND G. E. KALMUS.	69
1 GEV/C	K-MINUS PROTON INTERACTIONS AROUND 1 GEV/C AND THE Y*0(1815). J. SAHOURIA.	67
1G4	1G4 NUCLEON-NUCLEON PHASE SHIFT AND THE SIGMA MESON. J. BINSTOCK.	16
1200-MEV	MEASUREMENT OF THE DIFFERENTIAL CROSS SECTION FOR PI-MINUS PROTON GOES TO NEUTRON GAMMA BETWEEN 500-MEV AND 1200-MEV PION ENERGIES. K. M. CROWE, A. FAINBERG, A. S. L. PARSONS, P. TRUOEL, R. P. HADDOCK, B. M. K. NEFKENS, L. J. VERHEY, A. WEISS, AND M. E. ZELLER.	50
1580 MEV/C	K-PLUS DEUTERON INTERACTIONS FROM 860 MEV/C TO 1580 MEV/C. R. W. BLAND, A. A. HIRATA, G. GOLDHABER, V. H. SEEGER, G. H. TRILLING, AND C. G. WOHL.	81
184-INCH	MODEL OF RADIO-FREQUENCY SYSTEM FOR IMPROVEMENT OF 184-INCH CYCLOTRON. L. KANSTEIN.	130

184-INCH	STATUS OF THE 184-INCH CYCLOTRON EXTRACTION STUDIES. A. C. PAUL.	50
184-INCH	184-INCH CYCLOTRON. J. VALE.	129
2.3 GEV/C	PI-PLUS DEUTERON INTERACTIONS FROM 1.1 GEV/C TO 2.3 GEV/C. M. A. ABOLINS, O. I. DAHL, G. DANBURG, D. DAVIES, AND R. RADER.	30
2.8 GEV/C	PI-PLUS DEUTERON INTERACTIONS FROM 2.8 GEV/C TO 4.2 GEV/C. M. A. ABOLINS, O. I. DAHL, AND P. HOCH.	30
2.9 GEV/C	PI-PLUS PROTON INTERACTIONS BETWEEN 2.9 GEV/C AND 4.1 GEV/C. G. GIDAL, R. BIRGE, G. BORREANI, D. BROWN, AND F. LOTT.	68
2-GEV/C	DIBOSON PRODUCTION BY 2-GEV/C PIONS. A. R. CLARK, B. CORK, T. ELIOFF, L. T. KERTH, T. N. RANGASWAMY, AND W. A. WENZEL.	57
200 MEV	MEASUREMENT OF THE DIFFERENTIAL CROSS SECTION FOR PI-MINUS PROTON GOES TO NEUTRON GAMMA AT 200 MEV, 320 MEV, AND 370 MEV. A. S. L. PARSONS, P. TRUOEL, P. BERARDO, R. P. HADDOCK, J. A. HELLAND, B. M. K. NEFKENS, L. VERHEY, AND M. E. ZELLER.	47
25-INCH	25-INCH HYDROGEN BUBBLE CHAMBER. W. M. POWELL, J. A. KADYK, AND G. J. ECKMAN.	87
250 MEV	POLARIZATION IN PI-PLUS PROTON AND PI-MINUS PROTON ELASTIC SCATTERING FROM 250 MEV TO 410 MEV. W. GORN, C. MOREHOUSE, T. POWELL, P. ROBRISH, S. ROCK, S. SHANNON, H. STEINER, AND H. WEISBERG.	76
3.7 GEV/C	PI-PLUS PROTON INTERACTION AT 3.7 GEV/C. W. R. BUTLER, D. G. COYNE, AND J. N. MACNAUGHTON.	81
3 GEV	POLARIZATION IN BACKWARD NEUTRON-PROTON SCATTERING AT 3 GEV TO 6 GEV. P. ROBRISH, O. CHAMBERLAIN, R. D. FIELD, JR., R. Z. FUZESY, M. J. LONGO, C. MOREHOUSE, T. POWELL, S. ROCK, S. SHANNON, G. SHAPIRO, AND H. WEISBERG.	77
320 MEV	MEASUREMENT OF THE DIFFERENTIAL CROSS SECTION FOR PI-MINUS PROTON GOES TO NEUTRON GAMMA AT 200 MEV, 320 MEV, AND 370 MEV. A. S. L. PARSONS, P. TRUOEL, P. BERARDO, R. P. HADDOCK, J. A. HELLAND, B. M. K. NEFKENS, L. VERHEY, AND M. E. ZELLER.	47
370 MEV	MEASUREMENT OF THE DIFFERENTIAL CROSS SECTION FOR PI-MINUS PROTON GOES TO NEUTRON GAMMA AT 200 MEV, 320 MEV, AND 370 MEV. A. S. L. PARSONS, P. TRUOEL, P. BERARDO, R. P. HADDOCK, J. A. HELLAND, B. M. K. NEFKENS, L. VERHEY, AND M. E. ZELLER.	47
4.1 GEV/C	PI-PLUS PROTON INTERACTIONS BETWEEN 2.9 GEV/C AND 4.1 GEV/C. G. GIDAL, R. BIRGE, G. BORREANI, D. BROWN, AND F. LOTT.	68
4.2 GEV/C	PI-PLUS DEUTERON INTERACTIONS FROM 2.8 GEV/C TO 4.2 GEV/C. M. A. ABOLINS, O. I. DAHL, AND P. HOCH.	30
410 MEV	POLARIZATION IN PI-PLUS PROTON AND PI-MINUS PROTON ELASTIC SCATTERING FROM 250 MEV TO 410 MEV. W. GORN, C. MOREHOUSE, T. POWELL, P. ROBRISH, S. ROCK, S. SHANNON, H. STEINER, AND H. WEISBERG.	76
5.5 GEV/C	STRANGE-PARTICLE INTERACTIONS IN PROTON-PROTON COLLISIONS AT 5.5 GEV/C AND 6.6 GEV/C. A. B. WICKLUND AND G. A. SMITH.	33
500-MEV	MEASUREMENT OF THE DIFFERENTIAL CROSS SECTION FOR PI-MINUS PROTON GOES TO NEUTRON GAMMA BETWEEN 500-MEV AND 1200-MEV PION ENERGIES. K. M. CROWE, A. FAINBERG, A. S. L. PARSONS, P. TRUOEL, R. P. HADDOCK, B. M. K. NEFKENS, L. J. VERHEY, A. WEISS, AND M. E. ZELLER.	50
6.6 GEV/C	NONSTRANGE INTERACTIONS IN PROTON-PROTON COLLISIONS AT 6.6 GEV/C. E. GELLERT AND G. A. SMITH.	32
6.6 GEV/C	STRANGE-PARTICLE INTERACTIONS IN PROTON-PROTON COLLISIONS AT 5.5 GEV/C AND 6.6 GEV/C. A. B. WICKLUND AND G. A. SMITH.	33
6 GEV	POLARIZATION IN BACKWARD NEUTRON-PROTON SCATTERING AT 3 GEV TO 6 GEV. P. ROBRISH, O. CHAMBERLAIN, R. D. FIELD, JR., R. Z. FUZESY, M. J. LONGO, C. MOREHOUSE, T. POWELL, S. ROCK, S. SHANNON, G. SHAPIRO, AND H. WEISBERG.	77
6411	6411.	103
6600	6600.	104
730	SEARCH FOR A TWO-PI-ZERO RESONANCE NEAR 730 MEV IN PI-PLUS DEUTERON INTERACTIONS. R. J. MANNING AND G. A. SMITH.	31
860 MEV/C	K-PLUS DEUTERON INTERACTIONS FROM 860 MEV/C TO 1580 MEV/C. R. W. BLAND, A. A. HIRATA, G. GOLDHABER, V. H. SEEGER, G. H. TRILLING, AND C. G. WOHL.	81
88-INCH-CYCLOTRON	CONTINUING PROJECT -- 88-INCH-CYCLOTRON CAVE-4 SHIELDING STUDIES. L. D. STEPHENS.	90
9 GEV/C	K-PLUS PROTON INTERACTIONS AT 9 GEV/C. G. ALEXANDER, A. FIRESTONE, C. FU, G. GOLDHABER, AND D. LISSAUER.	82

This report was prepared as an account of Government sponsored work. Neither the United States, nor the Commission, nor any person acting on behalf of the Commission:

A. Makes any warranty or representation, expressed or implied, with respect to the accuracy, completeness, or usefulness of the information contained in this report, or that the use of any information, apparatus, method, or process disclosed in this report may not infringe privately owned rights; or

B. Assumes any liabilities with respect to the use of, or for damages resulting from the use of any information, apparatus, method, or process disclosed in this report.

As used in the above, "person acting on behalf of the Commission" includes any employee or contractor of the Commission, or employee of such contractor, to the extent that such employee or contractor of the Commission, or employee of such contractor prepares, disseminates, or provides access to, any information pursuant to his employment or contract with the Commission, or his employment with such contractor.