UCRL-1965

CONFIDENTIAL
SECURITY INFORMATION

UNIVERSITY OF CALIFORNIA — BERKELEY

TWO-WEEK LOAN COPY

This is a Library Circulating Copy which may be borrowed for two weeks. For a personal retention copy, call Tech. Info. Division, Ext. 5545

RADIATION LABORATORY

UCRL-1965 c.2

CONFIDENTIAL
SECURITY INFORMATION

DISCLAIMER

This document was prepared as an account of work sponsored by the United States Government. While this document is believed to contain correct information, neither the United States Government nor any agency thereof, nor the Regents of the University of California, nor any of their employees, makes any warranty, express or implied, or assumes any legal responsibility for the accuracy, completeness, or usefulness of any information, apparatus, product, or process disclosed, or represents that its use would not infringe privately owned rights. Reference herein to any specific commercial product, process, or service by its trade name, trademark, manufacturer, or otherwise, does not necessarily constitute or imply its endorsement, recommendation, or favoring by the United States Government or any agency thereof, or the Regents of the University of California. The views and opinions of authors expressed herein do not necessarily state or reflect those of the United States Government or any agency thereof or the Regents of the University of California.

UNIVERSITY OF CALIFORNIA
Radiation Laboratory

Cover Sheet
Do not remove

INDEX NO. UCRL-1865
This document contains 46 pages
This is copy 19 of 35 series A

DECLASSIFIED

Issued to University of California
Radiation Laboratory

[redacted]
Classification

Each person who receives this document must sign the cover sheet in the space below.

Route to	Noted by	Date	Route to	Noted by	Date
	B. Hubbard	10-22-52			
				RKW	OCT 28 1955

I-5(M)

DECLASSIFIED

UCRL-1865
Technology-Materials Testing
Accelerator Distribution

CONFIDENTIAL
SECURITY INFORMATION

UNIVERSITY OF CALIFORNIA

Radiation Laboratory

Contract No. W-7405-eng-48

CLASSIFICATION CANCELLED
BY AUTHORITY OF THE DECLASSIFICATION BRANCH USAEC
BY B Forbell 6-11-56
SIGNATURE OF THE PERSON MAKING THE CHANGE — DATE

CONSIDERATIONS ON THE EFFECT OF BEAM-DEE COUPLING IN A CYCLOTRON RF SYSTEM

L. F. Wouters

July 14, 1952

RESTRICTED DATA

This document contains restricted data as defined in the Atomic Energy Act of 1946. Its transmittal or disclosure of its contents in any manner to an unauthorizer person is prohibited.

Berkeley, California

CONFIDENTIAL
SECURITY INFORMATION

DECLASSIFIED

CONFIDENTIAL

SECURITY INFORMATION

Standard Distribution: Series A

	Copy Nos.
Atomic Energy Commission, Washington	1 - 4
California Research and Development Company	5 - 9
Carbide and Carbon Chemicals Company (ORNL)	10
Carbide and Carbon Chemicals Company (Y-12 Area)	11
Chicago Operations Office	12
Patent Branch, Washington	13
San Francisco Area Office	14 - 15
University of California Radiation Laboratory	16 - 20
Technical Information Service, Oak Ridge	21 - 35

CONFIDENTIAL
SECURITY INFORMATION

DECLASSIFIED

UCRL-1865
Technology-Materials Testing
Accelerator Distribution

CONFIDENTIAL
SECURITY INFORMATION

CONSIDERATIONS ON THE EFFECT OF BEAM-DEE COUPLING IN A CYCLOTRON RF SYSTEM

L. F. Wouters

Radiation Laboratory, Department of Physics
University of California, Berkeley, California

July 14, 1952

INTRODUCTION

Analysis of the problem of accelerating ions in a Thomas cyclotron has been confined almost entirely to the integration of various equations of motion (for single particles) for which a complete field description is necessary. In contrast, the problem of principal interest to rf system engineers concerns the gross transfer of electrical energy from an rf generator into an accelerated beam.

We shall first discuss the electrical equivalence of the beam as a load impedance across the rf generator which drives the cyclotron dee. It will be shown that the beam can be legitimately considered as a complex shunt impedance; the pertinent magnitude and phase components will be derived.

In the second section, the purely resistive loading effects occurring at exact resonance are considered. Graphical representations are developed and interpreted which attempt to correlate the operating parameters of the complete machine. Certain educated guesses are introduced (concerned chiefly with the behavior of ion sources) which constitute the most questionable steps of the analysis. However, it will point to which observations are needed to verify or correct these assumptions; a useful prediction of the range of impedance presented to the rf generator is also developed.

The last section deals with the possible reactive effects of large beam currents in mitigating or aggravating the mistuning of a dee resonant system. As a general rule, it can be concluded that for systems driven by the power amplifier type of rf generator, no consistent, significant phase effects occur, beyond those normally expected due to the reduction of rf system Q by loading. In the case of self-excited oscillator generators, a mistuning of the rf system is always aggravated by the beam reactance. In discussing the effect of beam on electrical stability of resonant systems, this section thereby presents additional criteria for choice of the type of resonant system.

ELECTRICAL REPRESENTATION OF BEAM LOAD

The obvious and most convenient electrical representation of the beam load is that of an equivalent complex impedance. Clearly for small beam currents such an equivalent impedance is very high, and there is little influence on the rf system. The region of interest is that for which the beam impedance becomes of the same order as the dee system impedance, or smaller. In particular, one is first interested in expressing the equivalent beam impedance or load current as a function of beam current in that region.

The validity of such a representation is a question of first concern; consider the charge-field interaction between particle packet and dee. In order to simplify the problem, consider a slotted pillbox located inside a grounded enclosure, through which a packet of particles is passed, as illustrated in Fig. 1.

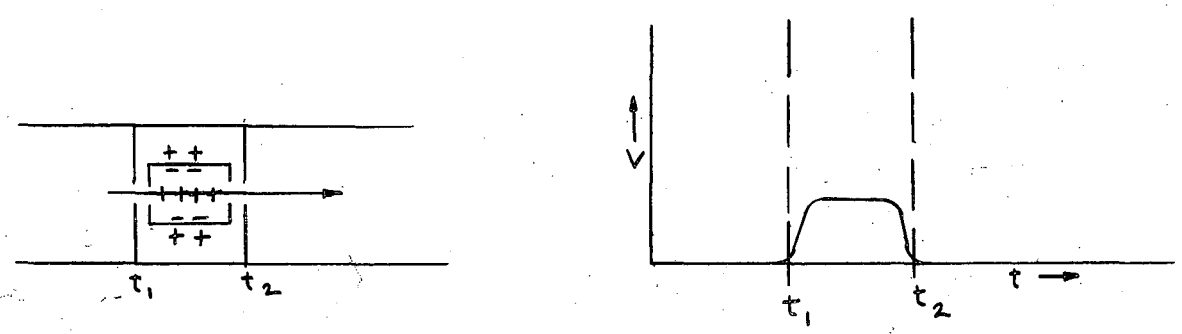

Fig. 1

Consider first the case in which it is well insulated, with no external rf generator. During entrance of the ions, electrons flow on the surface into the box, so that when all the ions are inside, the box has acquired a net charge to ground equal to the total packet charge. When the ions leave the box, the charge distribution recovers to normal conditions. (As long as the ion velocity is small compared to c, and the packet is of some

finite extent, it is safe to neglect impulse excitation of the pillbox space as a resonator and similar electrodynamic effects.)

If the pillbox were connected to ground through an electrical circuit, the latter can be considered as being shock excited by an approximately rectangular charge pulse (for simplicity), having a width equal to the packet transit time and in the obvious practical extension, repeated at the ions' resonant frequency. Such a charge pulse can be considered as two opposite step functions with an intervening delay; the circuit's net response can be most simply deduced by superposing its behavior for each of the two step functions.

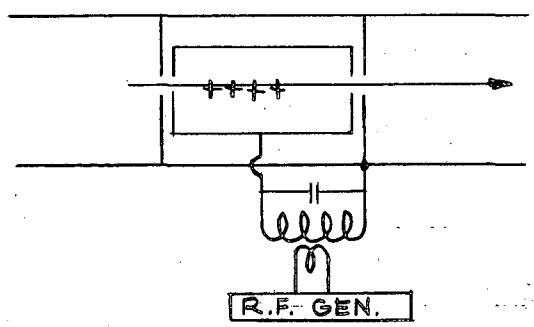

Fig. 2

In particular, suppose the pillbox is connected to a circuit resonant at the ion frequency as shown in Fig. 2; it will contribute part of the circuit capacitance, and in the ultimate case, the pillbox becomes a dee and is the entire capacitance. In this case the entrance pulse starts a free oscillation in the resonant system, and the exit pulse starts an opposite oscillation with a phase shift corresponding to the transit angle. Both of these oscillations, as well as their resultant, will decay with a decrement determined by the circuit Q, of course.

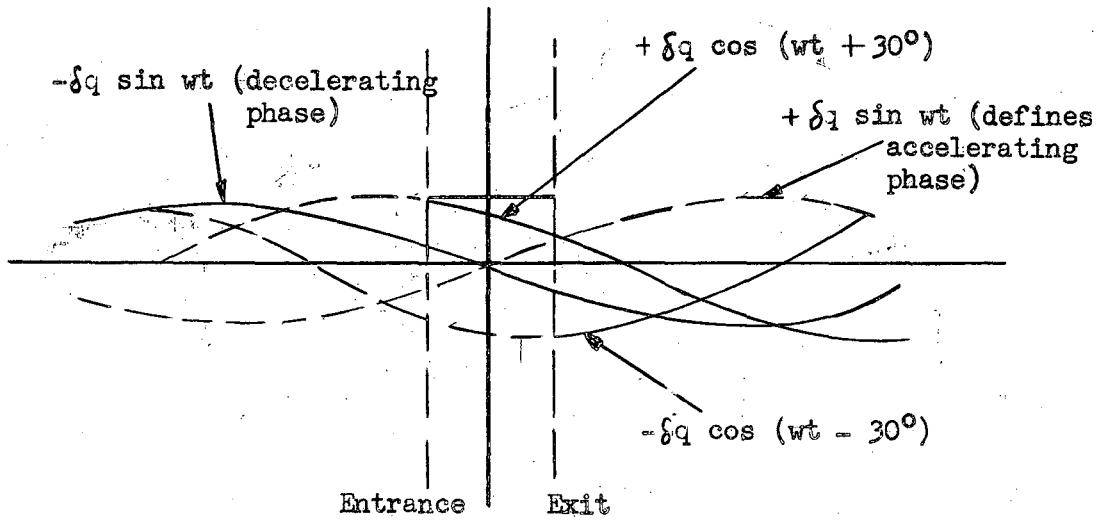

<u>Analytically</u>: $\delta q_\circ \cos (wt + 30^\circ) - \delta q_\circ \cos (wt - 30^\circ)$

$$= -2\, \delta q_\circ \sin wt \sin 30^\circ = -\delta q_\circ \sin wt.$$

Fig. 3

Finally, if the excitation is repetitive as in a cyclotron, a summation of all the properly attenuated contributions from preceding charge pulses must be made to find the steady state oscillation conditions. This has the effect of multiplying the single pulse magnitudes by the factor Q, at resonance.

The simple graphical superposition of Figure 3 immediately reveals that the phase of the net induced oscillations is just 180° away from the oscillations leading to the optimum acceleration conditions (i.e., maximum gain per turn). In fact, it is also clear that the induced steady state oscillation can only be maintained at the expense of work done by the beam packet on the dee, with consequent deceleration of the particles.* A situation of this sort might be approached in a neutralized 3 Ø unit by shutting off one dee rf generator.

---

* A particle traveling through any materially bounded space is decelerated due to the work it must do in "dragging" its overall image charge through the surrounding matter.

In order to complete the qualitative picture, suppose a rf generator were made to excite the resonant mode. As the injected amplitude is increased, the work done by the beam would decrease until the dee is maintained at an equilibrium level, at which the particles neither gain nor lose energy. At this condition, the rf generator is just supplying enough power to circulate the "neutralizing" charge in the rf circuit and $V = 0$. At higher rf levels, the beam would gain energy at each passage through the dee.

Quantitative arguments are based on the linear form of the differential equation for the charge circulating in the resonant system in various cases.

In the free resonant system, this is familiar:

$$L\ddot{q} + R\dot{q} + \frac{1}{c} q = 0$$

If an applied repetitive induced charge impulse is approximated by a sinusoidal charge variation, then:

$$L\ddot{q} + R\dot{q} + \frac{1}{c}\left[q + q_b\, e^{j(wt + a)}\right] = 0$$

In a high Q system, this is a valid approach, inasmuch as the resonant system picks out the corresponding frequency contribution in a very singular way.

Similarly if the resonant system is excited by an external rf generator which injects repetitive charge impulses, one writes:

$$(L\ddot{q} + R\dot{q} + \frac{q}{c}) + \frac{q_b}{c} e^{j(\omega t + \alpha)} = \frac{q_d}{c} e^{jwt}$$

whose general solution is of the form $q = q_0 e^{j(\omega t + \beta)}$ of course.

Making this substitution, one obtains:

$$q_d = (1 - w^2 Lc + jwRc)\, q_0 e^{j\beta} + q_b e^{j\alpha}$$

It is now simple to explicitly demonstrate the linear analytic character of the beam; consider first the situation for no beam current, $q_b = 0$

$$q_d^{(1)} = (1 - w^2 Lc + jwRc)\, q_0 e^{j\beta_1}$$

This is just the driving charge required to maintain the circulating current

q_o. Next, for the same q_o, consider the situation with beam current:

$$q_d^{(2)} = (1 - w^2 Lc + j_w Rc)\, q_o e^{j\beta_2} + q_b e^{j\alpha}$$

This can also be expressed as:

$$q_d^{(2)} = q_d^{(1)}\, e^{j(\beta_2 - \beta_1)} + q_b e^{j\alpha}$$

(in particular, $\beta_1 = 0$)

i.e., the driving charge is now the sum of that required to drive the rf circulating charge plus that required to neutralize the beam charge. It follows at once, that, since the time variations are chosen to be sinusoidal, a similar expression relating driving current, rf current and equivalent beam current must be true, in complex form:

$$\vec{i_d} = \vec{i_r} + \vec{i_b}$$

i_r and i_b are then the currents flowing into two parallel branches of an equivalent circuit driven by i_d.

There is another detail concerning validity of this representation, which has to do with the "static" versus "dynamic" nature of the beam. Statically, it is satisfactory to represent the beam loading as an equivalent resistance and reactance; dynamically, these impedance terms behave non-linearly as functions of voltage and current. The effect of this on the recent argument concerning the beam-dee interaction can be side-stepped by assuming that dynamic variations in operating conditions must occur adiabatically as far as the beam is concerned. This is realized in practice since the Q of the resonant system makes its time constant long compared to the beam's time constant, i.e., Q is much larger than N, the total number of beam turns.

By the same argument, situations in which the initial, source-injected beam current is dependent on dee voltage may be treated by applying parametrically an analytic expression of that dependence to the consideration of the constant source output case.

The Equivalent Circuit.

Analytically, an equivalent circuit is useful if the dynamic character is written into the definition of the components; see Fig. 4.

Fig. 4

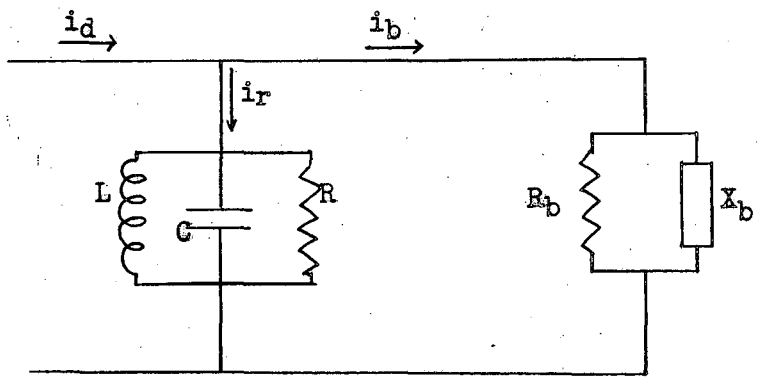

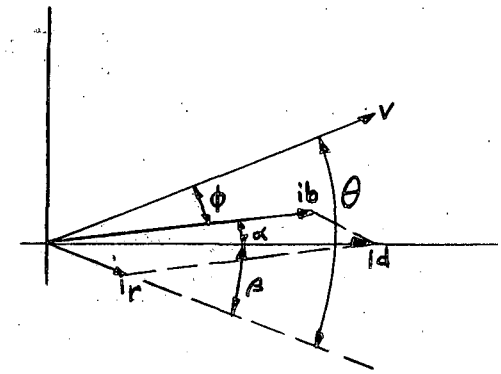

Z_r = dee impedance

Z_b = beam impedance

V = dee voltage

i_d = equivalent rf driving current

i_r = rf current required to obtain V on dee system alone

i_b = equivalent beam load current

ϕ = phase angle between beam current and dee voltage

θ = phase angle of dee system, defined as follows:

$$Z_r = \frac{1}{\frac{1}{R} + \frac{1}{j\omega L} + j\omega C} = R\,\frac{1}{1 + jR\left(\omega C - \frac{1}{\omega L}\right)}$$

$$i_r = \frac{V}{Z_r} = \frac{V}{R}\left[1 + jR\left(\omega C - \frac{1}{\omega L}\right)\right] \simeq \frac{V}{R}\left[1 + j\left(2Q\,\frac{\delta\omega}{\omega}\right)\right]$$

where: $Q = \frac{R}{\omega L}$ for a parallel circuit

and: $\delta\omega = \omega - \omega_{rf}$ $\qquad \omega_{rf} = \frac{1}{\sqrt{LC}}$

$$\therefore \tan\theta = \frac{\mathrm{Im}\,(i_r)}{\mathrm{Re}\,(i_r)} = 2Q\,\frac{\delta\omega}{\omega}$$

and $\left|i_r\right| = \frac{V}{R}\left|1 + j\tan\theta\right| = \frac{V}{R\cos\theta}$

$\vec{i_d} = \vec{i_b} + \vec{i_r}$

Now $\vec{i_b} = |i_b| \ (\cos\alpha + j \sin\alpha)$

$\vec{i_r} = |i_r| \ (\cos\beta - j \sin\beta)$

$$\left\{ \begin{array}{l} i_d = |i_b| \cos\alpha + |i_r| \cos\beta \\ 0 = |i_b| \sin\alpha - |i_r| \sin\beta \end{array} \right\}$$

The equivalent rf driving current (i_d) can be represented as the rf current required from a hypothetical oscillator/amplifier operating with a plate voltage swing equal to the rf dee voltage. The equivalent plate current would be a narrow "pip" of much larger electron current delivered to the resonant system during the negative half-cycle, of course. These voltages and currents are evidently related to the output of the real rf generator by the transformation ratio built into the dee system; the generator-dee coupling is usually so tight that no essential phase difference exists between plate and dee voltages.

Similarly the equivalent beam load current is an average of the relatively narrow, high "pips" of load current required from the system at each acceleration. This averaging, as performed by the resonant circuit is not much different from that performed by the beam current meter. This makes plausible the criterion for proper representation: In an exactly resonant system, the equivalent beam load must equal the total beam power:

$$nVi_B = V_m \ i_B = NV_t \ i_B = NfVi_B$$

so that the equivalent <u>r.m.s.</u> beam load current (at resonance) is:

$$i_B = \frac{1}{N} \frac{V_m}{V} i_B = \frac{Nf}{n} i_B$$

where: n = number of dee circuits

f = numerical factor defining energy gain per turn $\left\{ \begin{array}{l} \text{e.g.: for } 3\,\phi: \\ f = \frac{3V_o}{V} = 3\sqrt{2} \end{array} \right.$

N = number of turns to full energy

V = <u>r.m.s.</u> rf dee voltage ($V_o = \sqrt{2}\,V$, of course)

V_m = total beam energy (in electron volts)

V_t = energy gain per turn (in electron volts)

i_B = metered beam current

It was mentioned above that the beam loading pulses are resolvable into a sinusoidal load current whose phase with respect to a dee is such as to be zero when the beam packet crosses the dee center line and hence the phase of the equivalent beam load current is identified with beam phase angle.

In the more general, off-resonant case, consider the loading on the individual dee as the beam packet traverses it; one defines an equivalent current whose phase angle is to be the same as that of the beam packet:

$$\text{(acceleration power)} = \text{(total beam power)} \times \left\{\begin{array}{l}\text{fraction of energy}\\ \text{gain per turn con-}\\ \text{tributed by one dee}\end{array}\right\}$$

$$Vi_B \cos\phi = (V_m\, i_B) \times \left\{\frac{f_n\, V \cos\phi}{\sum_n^1 V \cos\phi}\right\} = (V_m\, i_B) \times \left(\frac{f_n\, V \cos\phi}{V_t}\right)$$

$$\therefore\quad i_b = \frac{f}{n}\frac{V_m}{V_t}\, i_B = \frac{Nf}{n}\, i_B$$

just as before.

For a single phase machine, 180° dees:

Resonant: $i_B = \frac{1}{2}\,\frac{V_m}{V}\, i_B$ Non-resonant: $(i_B) = 2\sqrt{2}\, Ni_B$

For a three phase machine, 60° dees:

Resonant: $i_B = \frac{1}{3}\,\frac{V_m}{V}\, i_B$ Non-resonant: $|i_B| = \sqrt{2}\, Ni_B$

Miscellaneous Arguments Concerning Other Operating Parameters.

In an ideal cyclotron, the ion source would inject ions into the machine near its center in such a way that all enter the dee and are picked up into median plane paths crossing the entire accelerating field at each gap. Then the entire beam load is due to the accelerating mechanism and in an

efficient machine, one desires that this be greater than the dee system rf load. Indeed, the discussion thus far has considered only just such a situation; in practice, there is also a loading due to mechanisms associated with the source region: ion pickup from source, initial acceleration between dees, direct stray ion current, etc. While in a small machine these effects are noticeable, in a large machine, on the other hand, an approach must be made to the ideal in practise, if really large currents are going to be accelerated without destroying the electrodes. This criterion fortunately permits one to dispense source loading effects from consideration with some confidence.

These arguments do not mean that there is no interaction between ion source and dee system of importance, however. Even though the ion source is considered "perfect", the magnitude of initially accelerated beam current may depend on dee voltage and this may be considered adiabatically, as mentioned before. For analytic purposes, sources can be typified by the power of the beam current-dee voltage dependence; later, arguments will be developed which identify the actual sources with such hypothetical beam injectors.

(1) Constant Source Output. This represents the class of sources which inject a constant beam current independent of dee voltage.

(2) Linear Source Output. This includes sources which inject a beam current proportional to the dee voltage. Since such a voltage-current behavior is ohmic, the analytic representation can be most easily made in terms of an effective source resistance $R_S = \frac{V}{i_B}$.

(3) Parabolic Source Output. This class includes sources which inject a current dependent on the square of the dee voltage. Analytically, it will appear that such a machine has a constant efficiency for conversion of rf power into beam power for any given source condition.

A particular source may not behave exactly like one of these classes, but it can be shown that the variation in behavior from one class to the next is not great. Hence one can bracket the operation (especially with regard to slopes) sufficiently well for most design purposes.

The type of rf generator also influences the course of analysis:

(1) MOPA (master oscillator-power amplifier) for which net reactive circuit impedances cause relative beam-dee phase changes as beam current varies.

(2) SEO (self-excited oscillator) for which net reactive circuit impedances cause frequency changes as beam current varies.

The analytic representation of such generators also requires different equivalent forms:

(1) Constant Current Generator, approached by loaded pentode MOPA.

(2) Constant Voltage Generator, approached by SEO and unloaded MOPA.

A further variation is provided by the question of single-phase versus three-phase accelerating systems; and finally, the three-phase system introduces inter-phase coupling effects. Two ideal systems may be considered in order to obtain a practicable interpretation :

(1) Single-phase and Tightly-coupled Multi-phase Systems. Relative dee voltage and current phases are practically unaffected by load changes.

(2) Completely uncoupled multi-phase systems (obtainable in practice by phase neutralization). Such a system can be treated as three separate systems driven by independent generators having fixed relative output phases and magnitudes, coupled by the beam energy gain during acceleration, on which the condition of optimum acceleration is imposed. This is that the beam phase angles are such as to give maximum energy gain per turn:

$$\frac{dV_t}{d\alpha} = 0$$

EXACT RESONANCE

This is the simplest and most desirable operating situation, of course, in which beam, dee, and driving frequencies are all equal and the phase angles are in proper adjustment. From an elementary consideration of power balance, various operating properties of heavily loaded cyclotrons can be deduced and these are interpreted by the curves of Figure 5. Here is plotted the total equivalent rf current input (i_d) to a dee against the dee voltage (V) for a typical 3 Ø machine. So:

(rf power input) ≡ (dee power) + (beam acceleration power)

or: $W = \frac{V^2}{R} + \frac{V_m\, i_B}{n}$ <u>per dee</u> (n ≡ no. of dees)

Also:

$$i_d = \frac{W}{V} = i_r + i_B = \frac{V}{R} + \frac{V_m\, i_B}{nV}$$

and:

$$V = \frac{1}{2} R i_d \left(1 \pm \sqrt{1 - \frac{4}{n} \frac{V_m\, i_B}{R i_d^2}}\right)$$

Finally the loci of Figure 5 plot:

$$i_d = \frac{V}{R} + \frac{V_m\, i_B}{3V}$$

for our "typical 3 Ø machine" in which R ≡ 250000 ohms, Vm ≡ 300 mev. Each point of such a plot corresponds to a certain unique division of power between dee and beam acceleration, and therefore to a unique beam current, for a machine of given shunt impedance and beam energy. The uniqueness of this dependence is affected in no way by the type of beam injection nor by the type of rf driver. These latter factors do influence the path of operation of a machine, that is, the locus traced by V and i_d starting at some given beam current and operating condition and ending at some other point. In practice, such a traversal through a region is accomplished by operational adjustments pertaining either to the rf power input or to the source

operating conditions. The particular locus $i_B = 0$ corresponds, of course, to the excitation of the dee by itself with no beam, and this is a straight line of slope $1/R$.

The loci of equal beam current are indicated; also plotted are loci of constant power and of constant efficiency where the latter is defined by:

$$\varepsilon = \left\{\frac{\text{beam power}}{\text{total power}}\right\} 100\% = 100 \left\{\frac{1}{1+\left(\frac{3V^2}{V_m\, R i_B}\right)}\right\} \% = 100 \left\{\frac{1}{1+\frac{R_B}{R}}\right\} \%$$

To each value of operating efficiency, there corresponds a unique total shunt resistance as seen by the rf-generator at resonance and (as also indicated on those loci):

$$R_t = \frac{R\, R_b}{R + R_b} = R\left(1 - \frac{\varepsilon}{100}\right)$$

Constant Source Loci.

Consider now the behavior of systems typical of the various source injectors as function of rf voltage and power, i.e., determine the paths traversed for parametrically constant source operating conditions as the amplifier plate voltage is changed.

I Constant Beam Injection. i_B = parametric constant. Thus $i_d = \frac{V}{R} + \frac{V_m\, i_B}{3V}$ also represents the operating curves for this system, which are loci of constant beam current.

II Linear Source Output. Write $i_B = \frac{V}{R_s}$ where R_s is an effective source resistance and is the parametric constant. Now $i_d = \frac{V}{R} + \frac{V_m}{3R_s}$ and the corresponding loci are lines parallel to $i_B = 0$ ($R_s = \infty$) displaced by $\frac{V_m}{3R_s}$.

III Parabolic Source Output. $i_B = \frac{V^2}{V_m R_p}$ where R_p is now the parametric constant representative of a given source condition. Here $i_d = \left(\frac{3R_p + R}{3R_p}\right)\frac{V}{R}$. The corresponding loci coincide with lines of constant efficiency, i.e., a cyclotron using a source having this characteristic operates at a fixed efficiency for a given source condition, regardless of dee voltage.*

In each case, it is seen that the position of the locus is determined by a parameter which is representative of the overall source operating condition. We are not concerned in the analysis with its dependence on arc pressure, voltage and current; rather the parameters i_B, R_s, R_p lump the effect of these source conditions into one number for each case. Nevertheless this is at least an empirically determinable dependence: $i_B = i_B(P, V_s, i_s)$, $R_s = R_s(P, V_s, i_s)$, $R_p = R_p = R_p(P, V_s, i_s)$ Hence, in discussing the behavior of a cyclotron as these source conditions change, when we speak of changing the source parameter, we assume that we know how to do this by a manipulation of arc controls. In a qualitative way, the direction of these changes is fairly obvious. Thus when we speak of increasing i_B, which corresponds to decreasing R_s or R_p, this would be accomplished in practice by any adjustment which should increase the available number of ions, such as increasing source pressure and current.

The usefulness of such an approach becomes more evident when related to the behavior of a typical rf generator; thus far no limitations imposed

---

* $$\left.\begin{aligned} E &= 100\left(\frac{R}{nR_p + R}\right) \ \% \\ i_d &= \left(\frac{n\,R_p + R}{R}\right)\frac{V}{n\,R_p} \end{aligned}\right\} \text{ for a parabolic source}$$

Thus each R_p determines a unique E and corresponding unique slope $\left(\frac{i_d}{V}\right)$.

by the rf generator have been taken into account; we have assumed that at any voltage, the rf generator can supply any current i_d. So it is natural to further assume that any point of Figure 5 can be reached - at least until we understand the path of operation required to reach it and what limits exist on that path.

Constant RF Generator Loci.

Consider then the behavior of a machine as a function of the source parameter, i.e., determine the paths traversed for parametrically constant rf generator operating conditions as i_B, R_s or R_p is changed. A high power cyclotron will doubtlessly be driven by a final amplifier utilizing pentode type tubes, and its characteristics must be more closely examined in order to appreciate the meaning of "constant rf generator conditions."

A pentode generator has somewhat unique operating properties. When lightly loaded, the plate voltage swing is limited only by $(V_p - V_{b_2})$, and the screen current is very high, since it collects all those electrons not reaching the plate at maximum swing (Figure 6a); the efficiency is poor. As the load increases, the plate swing decreases a little bit, but the plate current increases markedly until a space-charge limited condition (determined principally by the grid drive) is attained; meanwhile the "phase angle" and efficiency improve (Figure 6b). Beyond this region, even lower load resistance results in a lower plate swing, the plate current remaining essentially constant, and the efficiency once more decreasing.

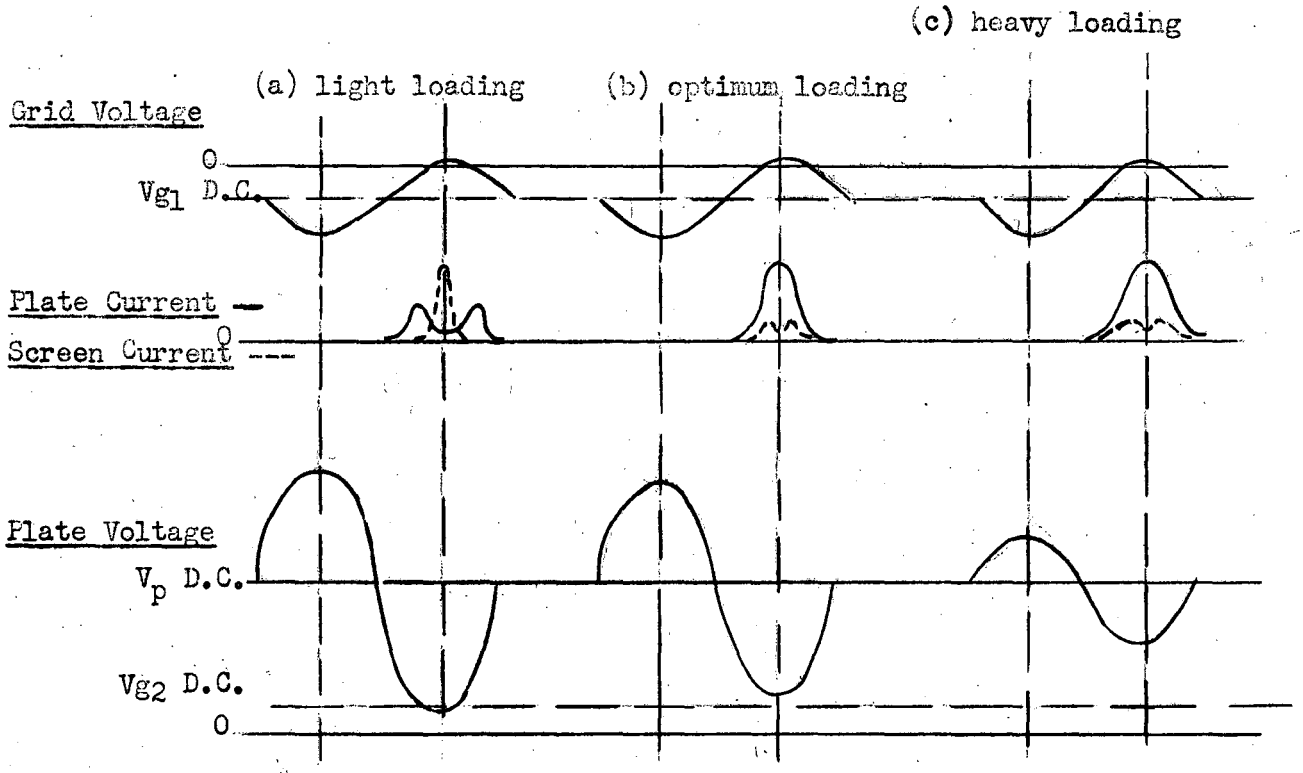

Fig. 6

Since the plate-dee coupling is assumed to be tight, a lightly-loaded machine thus acts as if it were driven by an approximately constant-voltage generator, and a heavily-loaded machine, as if it were driven by an approximately constant-current generator.

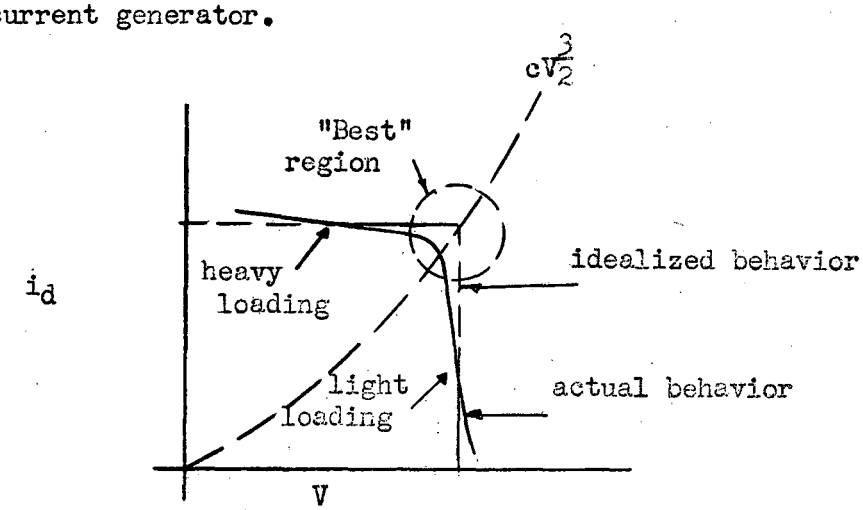

Fig. 7

The optimum operating region from the standpoint of the rf generator is around the knee of this curve, and this region moves through the plot along something like a $V^{3/2}$ locus, with a constant determined by the grid drive. A higher level of grid drive will result in a steeper "optimum operation" slope, and so forth; examples are presented in Figure 5.

In summary, the principal operational adjustments are:

(1) Change in rf drive -- obtained by changing V_p and hence V and represented by motion along paths of constant i_B, R_s, or R_p (or of intermediate slope). We term these "source" loci.

(2) Change in source conditions -- equivalent to varying i_B, R_s, or R_p, and represented by motion along paths approximating constant V or constant i_d. These will be called "generator" loci.

Consider a typical "turning-on" path for a "parabolic" source as illustrated by the path "2b" in Fig. 5. Rf power is first applied with no source arc, and dee voltage is established well above threshold, say at 500 KV. This corresponds to moving from the origin along $i_B = 0$ to the point V = 500 KV, i_d = 2 amps. The source is now "turned on" and a beam current is injected; as the equivalent source resistance is decreased, the beam current rises and the operating point moves along an almost constant voltage line until space charge limitation sets in, in the vicinity of 8 amps in this example. The operation curve bends over into an almost constant current characteristic at 10 amps; a further decrease in source resistance reduces not only the dee voltage but the beam current as well. For a given plate voltage setting, the maximum beam is obtained when the slope of the operation path is tangent to the constant beam current curves.

So we observe two interesting effects as a result of the inverse dependence of beam turns on dee voltage and of space-charge limitation in

the amplifier. Firstly, the maximum beam current is determined not so much by the source behavior as by the rf generator characteristics. Secondly, for a pentode generator, the best cyclotron operating region (both from the standpoint of high beam and high efficiency) corresponds roughly to the best efficiency region for the rf generator.

Suppose now the machine has been adjusted to the optimum operating point by source adjustments alone; in order to shift to a different optimum point, the plate voltage can be changed. The operating point shifts along an appropriate "source" locus; in general, it reaches a new optimum position only after a further readjustment of the source.

Another method of shifting the operating point consists in readjusting amplifier grid drive; this shifts just the constant current part of the generator locus up and down on the scale. The particular values of grid drive and space charge limited currents are, of course, dependent on the pentode geometry, so that only qualitative consideration can be given to this aspect. Examples of various possible characteristics of this sort are also shown in Figure 5.

Finally, the range of overall rf system impedance is illustrated by Figure 8. Constant voltage and current loci corresponding to representative families of operating paths are plotted. As choice of abscissae which consistently identify points along these paths, the operating efficiency/input resistance intercepts are used. It is seen that the impedance may vary within a 4:1 range (120000 to 30000 ohms) in the most important operating region.

"Forbidden" Conditions and Defocusing Effects.

Regions of operation beyond a "generator" locus are not accessible for that particular level of operation - thus, for the path indicated as

2a, the adjustment $R_s = 5 \times 10^6$ ohms would not be realizeable for a "linear" source. Such a situation turns out to violate the initial conditions of the problem. In practice, it is certainly possible to adjust a source into such a region; the dee voltage must perforce drop until an additional beam limiting mechanism "loses" the excess injected beam. This implies that from the standpoint of the main accelerating process, neither a constant injection nor a "linear" injection source are representative of the beam-dee voltage dependence but that a higher order beam-dee voltage dependence should exist. Examining Figure 5, it is seen that all the loci belonging to the next higher power dependence (parabolic) always intercept any operating path, so that this class is analytically complete.

Certainly in the case of the calutron-type rf-injection source, both empirical evidence and qualitative considerations support an approximately parabolic dependence. The space-charge limited output of the emission sheath should have a $V^{3/2}$ behavior; in addition, the retraction of the sheath as the field increases and the enhanced collection of those ions emitted with appreciable axial momenta should make additional contributions, so that a higher power dependence may be expected, such as V^2.

Crude measurements of efficiency of collecting ions out of the source into an accelerated beam have shown that at best perhaps one-third of the beam which makes the first turn will appear after many turns (in the region of constant radial dependence), and that most of the uncollected beam is lost by the fourth or fifth turn. In order to account properly for the fraction of power lost in this way, the effective beam current i_b could be written:

$$i_b = N i_B + \sum_{1}^{N'} i_{lost} = (N + \overline{N'})\, i_B$$

where $\overline{N'} = \approx 2$ or 3

Thus, in a large machine where $N \gg N'$, the "defocused" acceleration load is negligible. Nevertheless it does represent a fair amount of power dissipated in a confined region; if 100 ma were lost in the first two turns, this represents of the order of 100 kw being lost in a volume roughly two feet in diameter, including "top" and "bottom" tank walls and dee tips.

Taking into account the rf efficiency of the final amplifier, the beam power loss measurements on the 20-inch model show an acceleration efficiency of 25 percent to 33 percent. A preliminary check of the constant source characteristics shows a slope (on a V-i_d plot for that model) corresponding to an acceleration efficiency of 30 percent, roughly. (Actually even for the 20-inch model, the defocused contribution is lost within the error of the crude power measurements).

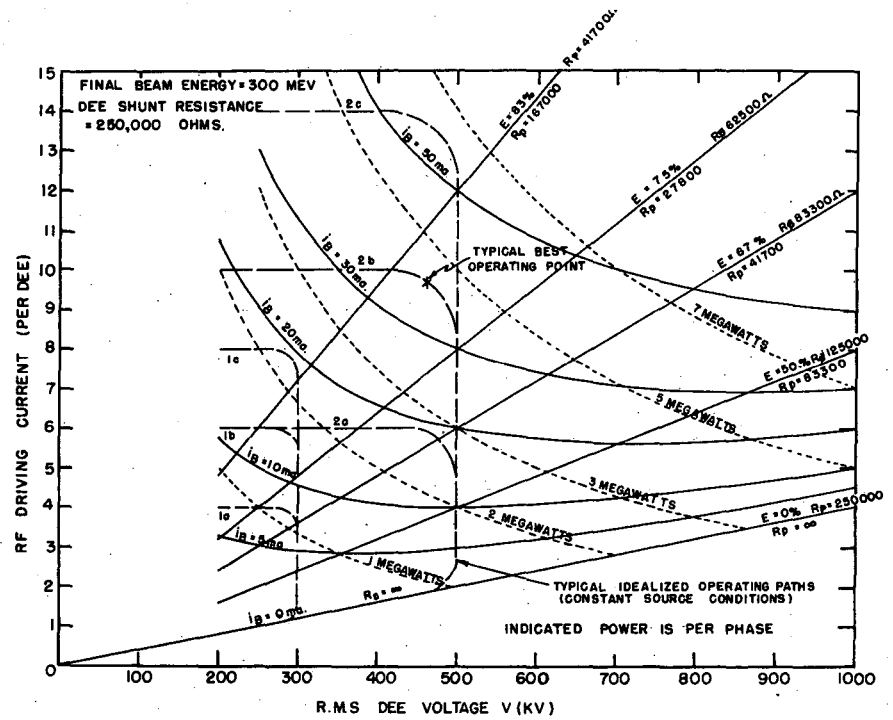

FIG. 5

NOMOGRAPH OF 3Φ CYCLOTRON R.F. OPERATING CONDITIONS (PER PHASE)

CONFIDENTIAL

MU3934

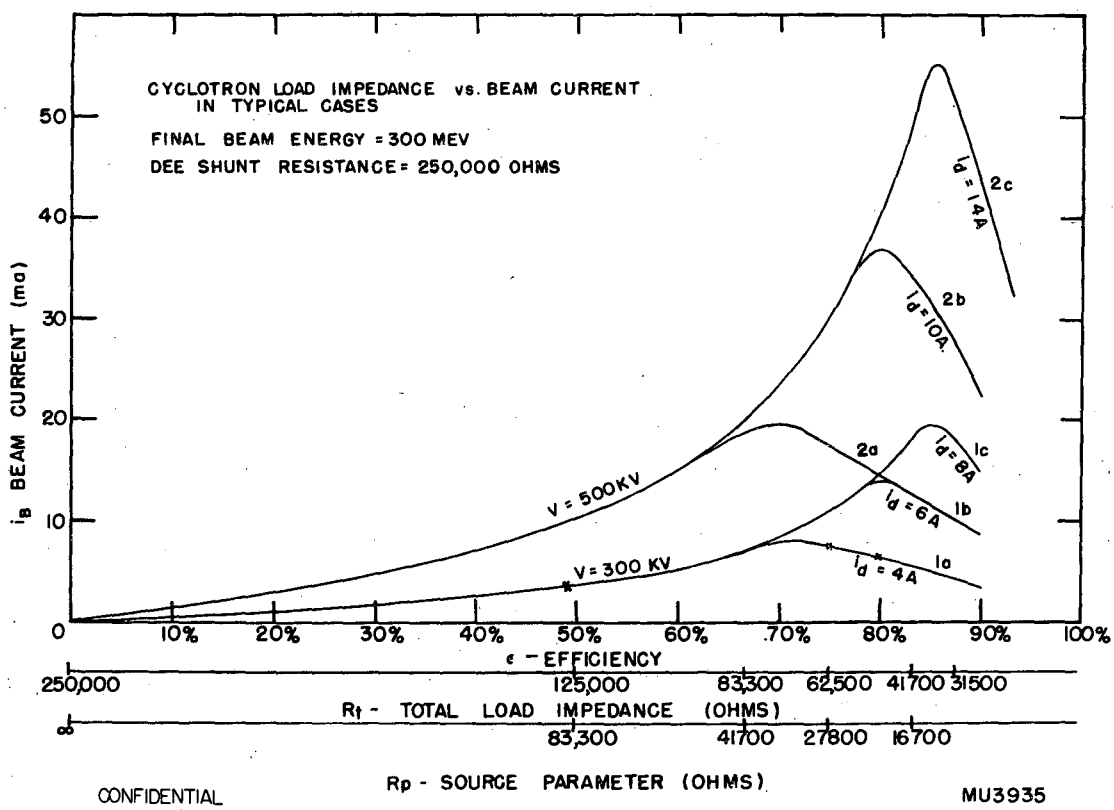

CONFIDENTIAL

MU3935

FIG. 8

NON-RESONANT SYSTEMS

The problem which first called attention to the possible effects of the beam-dee interaction has to do with the mechanical stability needed in the massive dee structures to be used in a high power cyclotron.

From $\omega^2 Lc = 1$ and $c = k\,A/d$:

$$\left|\frac{\delta d}{d}\right| = \left|\frac{\delta c}{c}\right| = 2\left|\frac{\delta \omega}{\omega}\right|$$

Then in order that rf phase, amplitude and efficiency remain within reasonable limits, the structure should be sufficiently rigid so that $\left|\frac{\delta d}{d}\right| < \frac{1}{Q} \approx 0.0001$ for a representative dee.

Thus, (mechanical) beams many feet in length must hold their position within a few thousandths of an inch, a prohibitive requirement. The simpler and slower servo mechanisms can compensate for long period fluctuations, but short, transient distortions and vibrations would still cause extensive modulation.

A mechanism which might mitigate this situation is the beam-dee interaction. Clearly the acceleration loading reduces the Q of the system and thereby tends to minimize the effects of mistuning. For MOPA driven cyclotrons no further large, consistent phase-locking effects can be found on the basis of the concepts presented here. The analysis does indicate that the resonant system behaves electrically somewhat like a current transformer at high beam levels. The form of $i_d = i_r + i_b$ indicates this; when i_b gets big enough, then i_d and i_b are almost parallel, no matter how i_r is oriented. At one end of the electrical system, a sequence of electron pulses are fed in, at the other end, a sequence of positive ion pulses emerge at a different "voltage" with an efficiency approaching that of orthodox transformers.

Only in the case of SEO driven machines is there indicated a significant phasing effect; here it appears as an aggravation of a pre-existing mistuning condition, as the beam current is increased. For example, if the beam frequency is higher than the dee frequency, then the beam load appears to have a shunt capacitive reactance, which shifts the oscillation frequency further below the dee frequency. (The argument is considered in detail below.)

Thus, for the present, it appears to be essential to introduce a rapid response servo retuning device which can compensate for moderately high frequency vibrations and sharp transient shifts of the structures. It would appear to be sufficient to require a response time of the order of the loaded resonator decrement. Operating at about 6 Mc with an unloaded Q of 10000, and a maximum efficiency of 80 percent (P = 4), this would indicate $\tau_{servo} \approx 0.3$ millisecond. $(\tau = \frac{1}{f}\frac{Q}{P})$

Tightly-coupled Three-Phase Systems and Single Phase Systems.

These are analytically equivalent except for small numerical factors; they belong to the class for which the accelerated beam can be considered as effectively coupled to a single rotating rf mode to which belongs the major part of the stored energy. Only three resonant frequencies are involved in such a case: beam (ω_b), driving (ω), and mode or dee (ω_r).

We set up: $\vec{i_d} = \vec{i_b} + \vec{i_r}$; we must determine the phase and amplitude of each term:

$\vec{i_r}$: The phase of the resonator driving current is defined by: $\tan\theta = 2Q\frac{\delta\omega}{\omega}$ where $\delta\omega = \omega_r - \omega$ to get the proper sign; the amplitude is given by: $|i_r| = \frac{V}{R\cos\theta}$.

$\overrightarrow{i_b}$: The effective phase ($\bar{\phi}$) of the equivalent beam load current is here an average of the radially varying acceleration phase angle and may be defined by:

$$V_m = \sum_0^N V_t(n) = 3\sqrt{2}\, V \sum_0^N \cos \phi\,(n) = 3\sqrt{2}\, V\, N \cos \bar{\phi}$$

in which $\phi(n) = \phi_o + n\,\Delta\phi$ defines the phase angle at the nth turn, where:

ϕ_o = initial phase angle

$\Delta\phi = 2\pi\frac{\Delta t}{T} = 2\,\frac{\Delta\omega}{\omega}$ = phase gain per turn

$\Delta\omega = \omega_b - \omega$

N numbers the last turn; ϕ_n = emergent phase angle

In order to simplify matters, we say that the phase bunching in the initial turns, together with optimum ion "catching" at maximum voltage gain per turn, make it reasonable to set $\phi_o = 0$. Also replacing Σ by $\int$, find after integration and substitution:

$$V_m = \frac{3\sqrt{2}}{2\pi}\, V \frac{\omega}{\Delta\omega} \sin\left(2\pi N \frac{\Delta\omega}{\omega}\right) = 3\sqrt{2}\, V\, N \cos \bar{\phi}$$

but $\phi_N = 2\pi N \frac{\Delta\omega}{\omega}$ is the phase of the last turn and this is a particularly useful and applicable independent variable. So: $\cos \bar{\phi} = \frac{\sin \phi_N}{\phi_N}$

(Note that: $\sin \phi_N = \frac{2\pi}{3\sqrt{2}} \frac{V_m}{V} \frac{\Delta\omega}{\omega} = 1.48 \frac{V_m}{V} \frac{\Delta\omega}{\omega}$)

The amplitude of the equivalent beam load current is still:

$|i_b| = \sqrt{2}\; N\, i_B$. But now $N \neq \frac{V_m}{V_t}$ inasmuch as the gain per turn is a function of the particular turn; in fact, $V_t(n) = 3\sqrt{2}\, V \cos \phi\,(n)$. From the preceding expressions, find:

$$N = \left(\frac{V_m}{3\sqrt{2}\, V}\right) \frac{1}{\cos \bar{\phi}} = \frac{V_m}{3\sqrt{2}\, V}\left(\frac{\phi_N}{\sin \phi_N}\right)$$

and finally:

$$|i_b| = \frac{V_m}{3V}\left(\frac{\phi_N}{\sin \phi_N}\right) i_B$$

Figure 9 relates $\bar{\phi}$, ϕ_N and $\sin \phi_N$ for easy reference. For small ϕ_N:

$$\sin \Phi = \frac{1}{\sqrt{3}} \phi_N \quad \tan \Phi = \frac{1}{\sqrt{3}} \sin \phi_N \left(1 + \frac{4}{15} \sin^2 \phi_N\right)$$

<u>Fixed Frequency Driver (MOPA)</u>. $(\omega \neq \omega_r \neq \omega_b)$

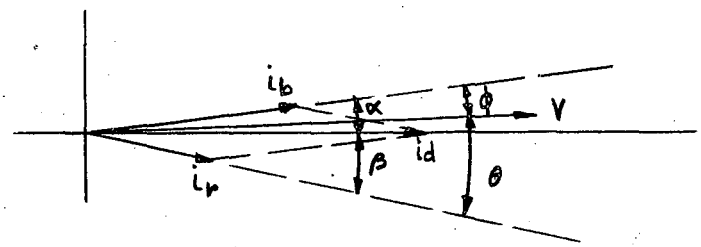

Fig. 10

Set up the components of $\overline{i_d}$:

$$i_d = \frac{V_m}{3V} \; i_B \; \frac{\cos \alpha}{\cos \phi} + \frac{V}{R} \; \frac{\cos \beta}{\cos \theta}$$

$$0 = \frac{V_m}{3V} \; i_B \; \frac{\sin \alpha}{\sin \phi} - \frac{V}{R} \; \frac{\sin \beta}{\cos \theta}$$

From $\sin \beta = \dfrac{V_m \, R i_B}{3V^2} \; \dfrac{\cos \theta}{\cos \phi} \; \sin \alpha$

and $\sin \beta = \sin (\phi + \theta) \cos \alpha - \cos (\phi + \theta) \sin \alpha$

find: $\tan \alpha = \dfrac{\sin (\phi + \theta)}{\cos (\phi + \theta) + P \dfrac{\cos \theta}{\cos \phi}}$ where:

<u>Constant Voltage Region</u>. V and ϕ are parametric and:

$$P = \frac{V_m \, R i_B}{3V^2}$$

<u>Constant Current Region</u>. Introduce $i_B = \dfrac{V^2}{V_m \, R_p}$ in the exemplary case of a "parabolic source", so that:

$$P = \frac{R}{3 \, R_p}$$

In any case, it is easily seen that those adjustments which increase beam current (and hence increase P) tend to reduce α; i.e., the machine tends to become a "current transformer". According to this analysis, it is also evident that in this type of machine no first-order beam or dee

phase changes can be expected; both θ and ϕ are parametric numbers set by physical conditions divorced from the beam load current.

The behavior of the other phase angles for representative values of θ, ϕ, and P over the possible range of operation is summarized by Fig. 11; the same cyclotron resonator characteristics have been assumed as used before.

Effect of Fluctuations.

If we perform a perturbation on θ, corresponding in practice to the effect of a mechanical fluctuation of the dee structure, we find, neglecting second order terms;

$$\tan(\delta\alpha) = \frac{\tan\alpha}{\tan(\phi+\theta)} \sin(\delta\theta)$$

In general $\frac{\tan\alpha}{\tan(\phi+\theta)} < 1$ so that $\delta\alpha < \delta\theta$; in fact, for large P, $\delta\alpha << \delta\theta$ and the load angle α becomes small and nearly independent of mistuning effects.

Fixed Phase Driver (SEO).

By virtue of the self-excitation mechanism of the oscillator, take V and i_d to be always parallel. Then $\alpha = \phi$ and $\beta = \theta$, and this imposes certain conditions on the relative frequencies.

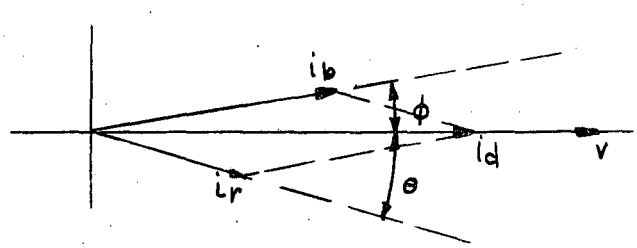

Fig. 12

Recall that $i_d = \mathrm{Re}\,(i_r) + \mathrm{Re}\,(i_b)$ and $\mathrm{Im}\,(i_r) = -\mathrm{Im}\,(i_b)$ where $i_r = \frac{V}{Z_r} = \frac{V}{R}\left\{1 + jR\left(\omega C - \frac{1}{\omega L}\right)\right\}$. If $\omega_b > \omega$, then i_b leads V (the illustrated case) and $\therefore$ $\mathrm{Im}\,(i_b) > 0$, $\mathrm{Im}\,(i_r) < 0$. So $(\omega^2 L C - 1) = \left(\frac{\omega^2}{\omega_r^2} - 1\right) < 0$ and $\therefore$ $\omega_r > \omega$ also. But, with very small beams, $\omega \simeq \omega_r$ and the situation must diverge from there as the beam current is increased. Hence $\omega_b > \omega_r > \omega$.

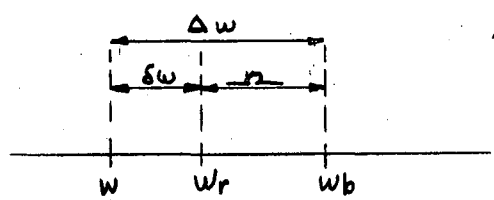

$\Delta\omega = \omega_b - \omega$
$\delta\omega = \omega_r - \omega$
$\Omega = \omega_b - \omega_r$

Fig. 13

Proceeding as before:

$$i_d = \frac{V_m}{3V}\, i_B + \frac{V}{R}$$

$$0 = \frac{V_m}{3V}\, i_B \tan\phi - \frac{V}{R}\tan\theta$$

$$\therefore \quad \tan\theta = P\tan\phi \qquad \text{where } P = \frac{V_m R i_B}{3V^2} \text{ as before.}$$

Subtsitute

$$\begin{cases} \tan\theta = 2\theta\,\dfrac{\delta\omega}{\omega} \\ \tan\phi = \dfrac{1}{\sqrt{3}}\sin\phi_N\left(1 + \dfrac{4}{15}\sin^2\phi_N\right) \\ \qquad \approx \dfrac{2\pi}{3\sqrt{6}}\left(\dfrac{V_m}{V}\,\dfrac{\Delta\omega}{\omega}\right) \end{cases}$$

within 1? percent when $\sin\phi_N \le \frac{1}{\sqrt{2}}$

Solving find:

$$\frac{\delta\omega}{\omega} = \left(\frac{\pi}{9\sqrt{6}\,Q}\right)\left(\frac{R i_B}{V_m}\right)\left(\frac{V_m}{V}\right)^3 \frac{\Delta\omega}{\omega}$$

This is valid for:

$$\left\{\begin{array}{l} \tan\theta < 1,\ \theta < 45^\circ,\ \dfrac{\delta\omega}{\omega} \le \dfrac{1}{2Q} \\ \sin\phi_N < \dfrac{1}{\sqrt{2}},\ \phi_N < 45^\circ,\ \dfrac{\Delta\omega}{\omega} \le \dfrac{3}{2\pi}\,\dfrac{V}{V_m} \end{array}\right\}$$

For constant voltage operation:

$$\frac{\Delta\omega}{\Omega} = \frac{1}{1 - \left(\frac{\pi}{9\sqrt{6}Q}\right)\left(\frac{Ri_B}{V_m}\right)\left(\frac{V_m}{V}\right)^3} = \frac{1}{1 - 14.2 \times 10^{-6} \left(\frac{Ri_B}{V_m}\right)\left(\frac{V_m}{V}\right)^3}$$

For constant current operation: Again introduce the parabolic dependence: $i_B = \frac{V^2}{V_m R_p}$ (as an example); Obtain:

$$\frac{\Delta\omega}{\Omega} = \frac{1}{1 - \left(\frac{\pi}{3\sqrt{6}Q}\right)\left(\frac{V_m}{Ri_d}\right)\left(\frac{R}{3R_p}\right)\left(1 + \frac{R}{3R_p}\right)}$$

$$= \frac{1}{1 - 42.7 \times 10^{-6}\left(\frac{V_m}{Ri_d}\right)\left(\frac{R}{3R_p}\right)\left(1 + \frac{R}{3R_p}\right)}$$

The most striking feature of this case is that the oscillation frequency is predicted to always shift away from the beam frequency as the beam load is increased. Note that for any given beam and generator setting this oscillator shift will be proportional to the relative mistuning of beam and dee. Moreover, in either case this factor of proportionality rises sharply as adjustments are made to increase beam current. However, the region of operation in which this occurs can be located well outside attainable conditions by suitable choice of the other operating parameters; this is illustrated in Fig. 14 which plots $\frac{\Delta\omega}{\Omega}$ for various probable operating conditions. Note especially the steep (inverse) dependence on dee voltage or driving current.

Effect of fluctuations is self-evident: A mechanical disturbance in the dee system causing a certain shift in resonant frequency results in a proportional shift in oscillation frequency, the factor being $\left(\frac{\Delta\omega}{\Omega}\right)$ of course.

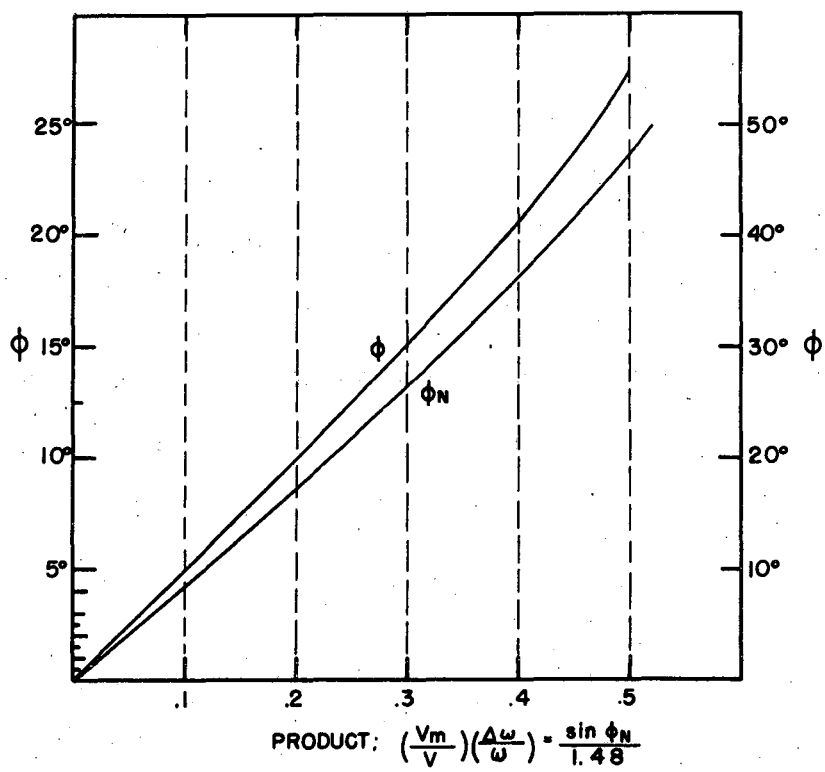

FIG. 9

CONFIDENTIAL

MU 3936

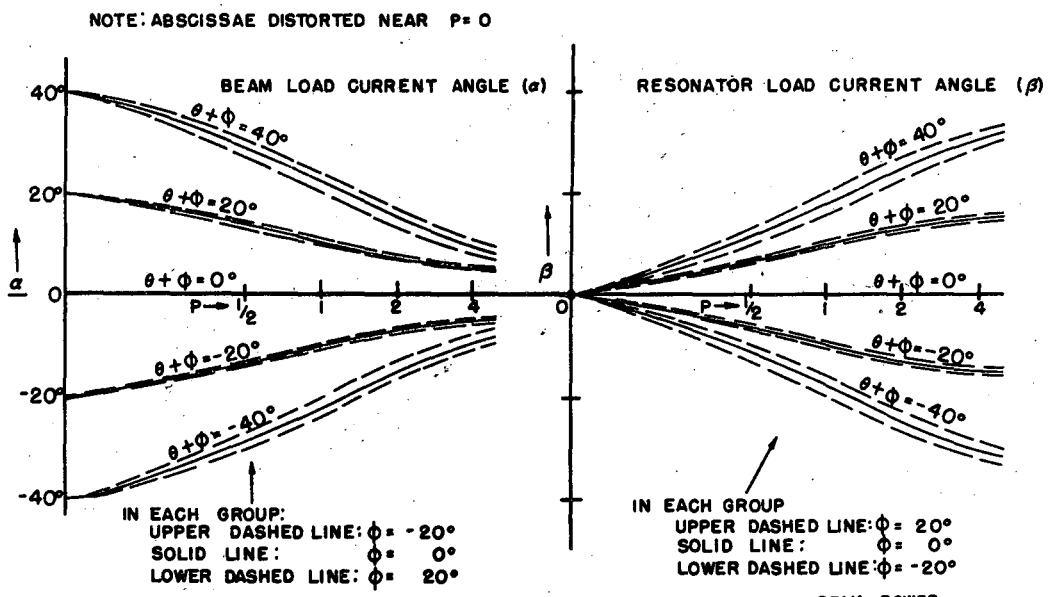

FIG. 11 - LOAD CURRENT ANGLES AS FUNCTIONS OF BEAM: $P = \frac{\text{BEAM POWER}}{\text{RESONATOR POWER}}$

SINGLE PHASE MOPA

MU3937

CONFIDENTIAL

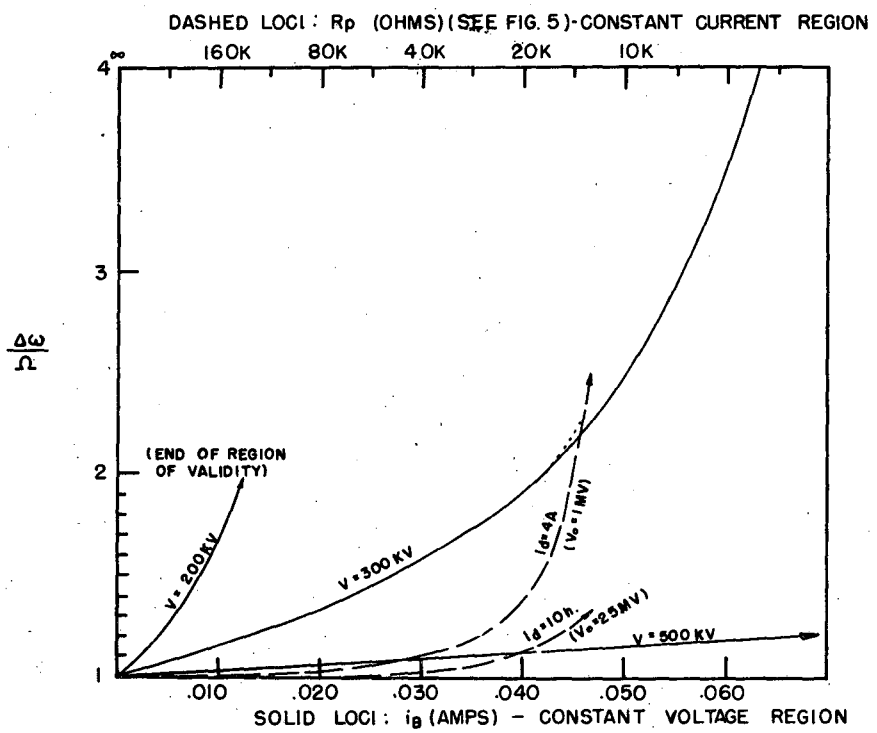

FIG. 14 - RATIO OF FINAL MISTUNING TO INITIAL ERROR AS FUNCTION OF BEAM SINGLE PHASE S.E.O.

MU3938

CONFIDENTIAL

Uncoupled or Neutralized Three-Phase System (MOPA only).

In order to be able to perform this analysis, we assume, as a manageable example, the case in which two dee systems are exactly resonant, and the third dee is mistuned. ($\theta_1 = \theta_2 = 0$, $\theta_3 = \theta$). The beam frequency is equal to the driving frequency.

In a practical machine, those phases most easily kept constant are the relative phase angles between the three driving currents. These can be kept in relative adjustment by means essentially independent of what is going on in the machine, principally because of the nature of the class C mode of amplifier operation (as indicated in the second section). All current phase angles are therefore referred back to the driving current vectors as located at 0°.

The magnitudes and phases of the various components are not as simply determinable as in the single mode case; here they are also dependent on the relative beam phase angle α, which now has the interesting property of being necessarily the same with respect to each driving vector. In order to make it determinable we must introduce an additional condition: the criterion of maximum energy gain per turn, in the form:

$$\frac{dV_t}{d\alpha} = 0$$

Constant Voltage Region (any source).

The parametric constants here are θ, V, and i_B (or P).

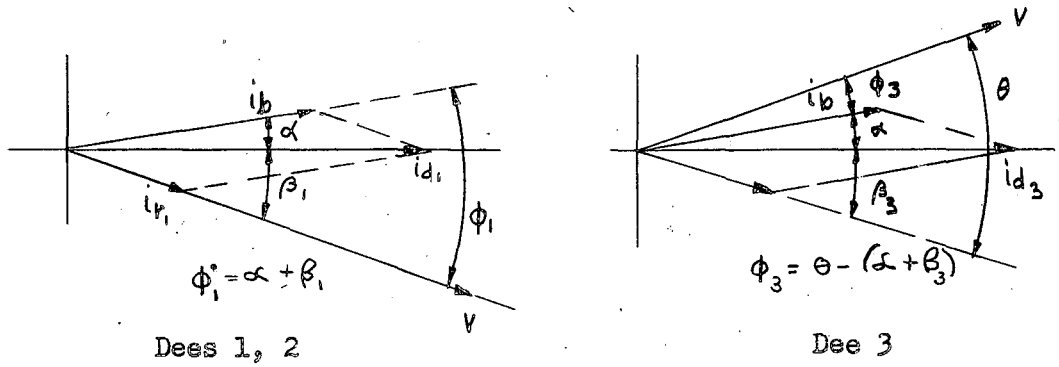

Fig. 15

In general:

$$\left\{\begin{aligned} i_d &= 2\,\frac{V_m}{V_t}\,i_B\cos\alpha + \frac{V}{R}\,\frac{\cos\beta}{\cos\theta} \\ 0 &= 2\,\frac{V_m}{V_t}\,i_B\sin\alpha - \frac{V}{R}\,\frac{\sin\beta}{\cos\theta} \end{aligned}\right\}$$

This all leads to three forms for V_t:

(a) $V_t^{(1)} = \sqrt{2}\,\frac{V_m}{V}\,Ri_B\,\frac{\sin\alpha}{\sin\beta_1}$

(b) $V_t^{(3)} = \sqrt{2}\,\frac{V_m}{V}\,Ri_B\,\frac{\sin\alpha}{\sin\beta_3}\,\cos\theta$

(c) $V_t = \sqrt{2}\,V\,(\cos\phi_1 + \cos\phi_2 + \cos\phi_3)$

$$= \sqrt{2}\,V\left\{2\,(\cos\alpha\cos\beta_1 - \sin\alpha\sin\beta_1) + \left[\cos(\theta-\alpha)\times\sqrt{1-\sin^2\beta_1\cos^2\theta} + \sin(\theta-\alpha)\sin\beta_1\cos\theta\right]\right\}$$

having used in (c), from (a) and (b):

$$\sin\beta_3 = \sin\beta_1\cos\theta \qquad \cos\beta_3 = 1 - \sin^{-2}\beta_1\cos^2\theta$$

Equating (a) and (c) and solving, obtain:

$$aPZ^2_{(1)} + bZ_{(1)} + (c + aP) = 0$$

in which:

$$a = 3\sin\alpha\cos\theta \qquad P = \frac{V_m\,Ri_B}{3V^2}$$

$$b = -\left[2f\cos\alpha + \cos(\theta-\alpha)\right] \qquad Z_{(1)} = \frac{\sqrt{1-\cos^2\theta\sin^2\beta_1}}{\cos\theta\sin\beta_1} > 1$$

$$c = 2\left[\frac{\sin\alpha}{\cos\beta} - \sin(\theta-\alpha)\right] \qquad f = \frac{\sqrt{1-\sin^2}}{\sqrt{1-\cos^2\theta\sin^2\beta_1}} \simeq 1$$

$$Z_1 = -\frac{b}{2aP}\left\{1 \pm \sqrt{1 - \frac{4aP\,(c+aP)}{b^2}}\right\}$$

Introduce condition for best acceleration:

From the current equations:

$$\frac{dV_t}{d\alpha} = \sqrt{2}\ \frac{V_m}{V}\ Ri_B \cos\theta \frac{d}{d\alpha}\left(\frac{\sin\alpha}{\sin\beta}\right) = 0$$

whence

$$\frac{d\beta}{d\alpha} = \tan\beta \cos\alpha$$

From the energy gain per turn:

$$\frac{dV_t}{d\alpha} = \sqrt{2}\ V\Big\{ -2\sin(\alpha+\beta_1)\,(1+\tan\beta_1\cos\alpha) +$$

$$\left[\sin(\theta-\alpha)\sqrt{1-\sin^2\beta_1\cos^2\theta} - \cos(\theta-\alpha)\sin\beta_1\cos\theta\right]$$

$$+\left[\sin(\theta-\alpha)\cos\beta_1\cos\theta - \cos(\theta-\alpha)\frac{\sin\beta_1\cos\beta_1\cos^2\theta}{\sqrt{1-\sin^2\beta_1\cos^2\theta}}\right]$$

$$\tan\beta_1\cos\alpha = 0$$

After some juggling, obtain:

$$AZ^2_{(2)} + BZ_{(2)} + C = 0$$

where:

$$A = \left[2f\tan\alpha - \frac{\sin(\theta-\alpha)}{\cos\alpha}\right] \qquad Z_{(2)} = \frac{\sqrt{1-\cos^2\theta\sin^2\beta_1}}{\cos\theta\sin\beta_1} > 1$$

$$B = \left[2\ \frac{(1+\sin\alpha)}{\cos\theta} + \frac{\cos(\theta-\alpha)}{\cos\alpha} - \sin(\theta-\alpha)\right]$$

$$C = \left[\frac{2}{f}\ \frac{\cos\alpha}{\cos\theta} + \cos(\theta-\alpha)\right] \qquad f = \frac{\sqrt{1-\sin^2\beta_1}}{\sqrt{1-\cos^2\theta\sin^2\beta_1}} \simeq 1$$

$$\therefore\ Z_2 = -\frac{B}{2A}\left\{1 \pm \sqrt{1-\frac{4AC}{B^2}}\right\}$$

These two expressions for $Z(\beta_1, \theta)$ would permit us to effectively eliminate β_1, thereby obtaining an equation determining α corresponding to each choice of P and θ.

$$F(\alpha, \theta, P) = 0$$

A number of justifiable simplifications rescues this procedure from the impossible. A consideration of the probable range of variables and hence of the coefficients in the quadratics shows that the radicals in the solutions are not far from unity, so that we can use $\sqrt{1+x} \simeq 1 + 1/2\, x$, (for $P < 5$). Then

$$Z_1^+ = -\frac{b}{aP} \qquad Z_2^+ = -\frac{B}{A}$$

$$Z_1^- = -\frac{c + aP}{b} \qquad Z_2^- = -\frac{C}{B}$$

Again a consideration of the ranges of these solutions shows that Z_1^-, Z_2^- are not compatible with $Z > 1$ and that Z_1^+ and Z_2^+ are continuously connected to the asymptote $Z \longrightarrow +\infty$ when $P \longrightarrow 0$. Then the simultaneous solution becomes simply:

$$-Z = \frac{b}{aP} = \frac{B}{A} \qquad (P < 5)$$

The form obtained by substitution of coefficients can be simplified, obtaining (taking $f = 1$):

$$P = 1/3\ g\ (\theta) \left\{ \left(\frac{\sin\theta}{\tan\alpha}\right) - (2 + \cos\theta) \right\}$$

in which

$$g\ (\theta) = \left\{ \frac{(2 + \cos\theta)}{2 + \cos\theta\ (\cos\theta - \sin\theta)} \right\} \approx 1$$

An explicit expression for α is readily found:

$$\tan\alpha = \frac{\sin\theta}{(2 + \cos\theta) + \frac{3P}{g(\theta)}}$$

For $P = 0$, define $\tan\alpha_0 = \dfrac{\sin\theta}{2 + \cos\theta}$

Returning to $Z = -\dfrac{b}{aP}$ obtain:

$$\tan\beta_3 = \frac{1}{Z} = g\ (\theta)\ \cos\theta \left\{ \tan\alpha_0 - \tan\alpha \right\}$$

and $$\sin\beta_1 = \frac{\sin\beta_3}{\cos\theta} = \frac{1}{\sqrt{Z^2 + 1}\ \cos\theta}$$

Thus all the phase angles are analytically expressed as functions of the parameters P and θ.

Note that $\tan \alpha \approx 1/3 \sin \theta$ for small θ and small P (small mistuning and beam current); this is consistent with what one might expect intuitively: We know that the maximum energy gain per turn will occur for a phase angle somewhere between the resonant voltage vector position (V_1, V_2) and the mistuned vector (V_3). Since the beam receives about twice the contribution from resonant dees than it does from the mistuned one, it is reasonable that the beam phase would lie at about one third of the arc from V_1, V_2 to V_3, and this is just what is predicted. (At small beam currents, V_1, V_2 will lie practically parallel to i_d, of course.)

The expression for α shows the same sort of dependence as in the single phase case; increasing the beam current reduces α and increases β; the beam phase angles (ϕ) are not materially disturbed. Fig. 16 summarizes the behavior of these various angles in typical operating circumstances.

Effect of Fluctuations.

A perturbation calculation gives

$$\delta a \approx \frac{\tan \alpha}{\tan \theta} \delta\theta$$

and again we see that large beams and small "load" angles lead to smaller phase fluctuations.

Constant Current Region.

The parametric constants are now θ, i_d and R_p.

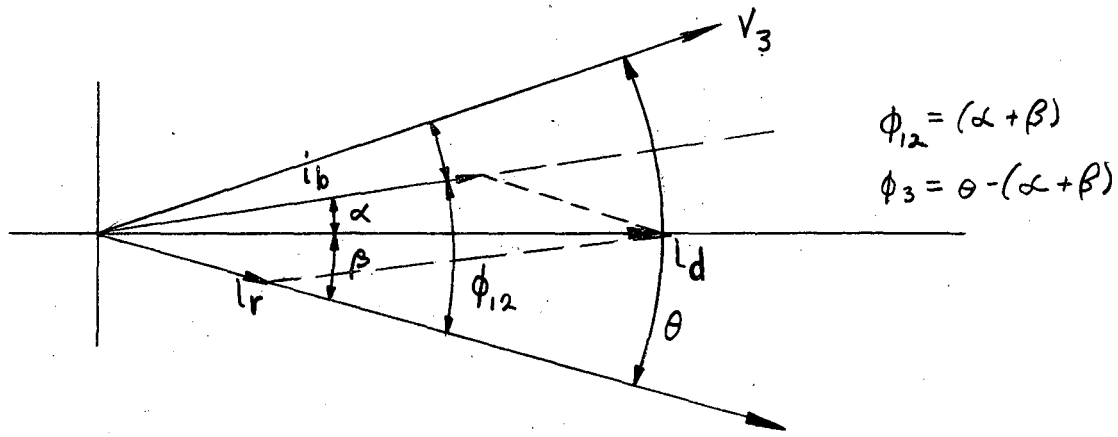

Fig. 17

It is seen from the vector diagram that since i_b and i_d are the same for the three dees, then β and i_r must be the same all the way around, in addition to α. Thus phase changing effects can only re-position the vectors to obtain maximum energy gain per turn, and the voltage vectors must stay fixed with respect to one another.

In order to make headway with this case, the beam current is taken proportional to V_p^2, V_p being essentially an integral of the field which picks up those ions making the principal contribution to the acceleration load. Because of the resonance condition and bunching effects, it is reasonable that even for an injection source, the amount of accelerated beam depends somewhat in this way not only on the "source" dee voltage, but on the other dee voltages as well. While this dependence is doubtlessly complex, as long as the dee voltages and phase angles are not radically out of adjustment, V_p can be taken, in the first order, proportional to V_t. Then

$$i_B = \frac{V_t^2}{18\, V_m\, R_p} \longrightarrow \frac{V^2}{V_m\, R_p} \qquad \text{(at resonance)}$$

So at resonance $\frac{R_p}{R} = \frac{1}{3P_{res.}}$; the factor 18 makes this R_p the same as that introduced before.

Then:

$$\left\{\begin{aligned} i_d &= \frac{\sqrt{2}}{18}\,\frac{V_t}{R_p}\,\cos\alpha + \frac{V}{R\cos\theta}\,\cos\beta \\ 0 &= \frac{\sqrt{2}}{18}\,\frac{V_t}{R_p}\,\sin\alpha - \frac{V}{R\cos\theta}\,\sin\beta \end{aligned}\right\}$$

whence:

$$V = Ri_d\, p\cos\theta\,\frac{\sin\alpha}{\sin\beta} \qquad\qquad p = \frac{\sqrt{2}}{18}\,\frac{V_t}{R_p\, i_d}$$

From i_d, find: $\quad \frac{1}{p} = (\cos\alpha + \sin\alpha\,\cot\beta)$

Now: $\quad V_t = \sqrt{2}\,(V_1\cos\phi_1 + V_2\cos\phi_2 + V_3\cos\phi_3)$

Substituting for V_j, ϕ_j:

$$V\cos\phi = 1/2\, Ri_d\left\{\left[\sin 2\theta\,\sin\alpha + (1+\cos 2\theta)\cos\alpha\right] - (1+\cos\theta)\,p\right\}$$

Further manipulation yields:

$$V_t = \left\{\frac{\sin 2\theta\,\sin\alpha + (5+\cos 2\theta)\cos\alpha}{1+\frac{R}{18\,R_p}(5+\cos 2\theta)}\right\}\frac{Ri_d}{\sqrt{2}}$$

Introduce condition for best acceleration:

$$\frac{dV_t}{d\alpha} = \left\{\frac{\sin 2\theta\,\cos\alpha - (5+\cos 2\theta)\sin\alpha}{1+\frac{R}{18\,R_p}(5+\cos 2\theta)}\right\}\frac{Ri_d}{\sqrt{2}} = 0$$

whence $\tan\alpha = \dfrac{\sin 2\theta}{5+\cos 2\theta}$

Solving for $\sin\alpha$, $\cos\alpha$ and p, one can find:

$$\tan(\alpha+\beta) = \frac{\sin\alpha}{\cos\alpha - p} = \frac{\sin 2\theta}{(5+\cos 2\theta) - \left[\dfrac{26+10\cos 2\theta}{18\,\frac{R_p}{R} + (5+\cos 2\theta)}\right]}$$

which determines β; then

$$\phi_{12} = \alpha+\beta \qquad \text{and } \phi_3 = \theta - \phi_{12}$$

As indicated previously, this predicts that the best accelerating angle, α, becomes independent of beam level; it is a consequence of the fixed relative position of the voltage vectors. This result is independent of the type of source assumed, also. Fig. 18 displays the behavior of the other phase

angles in representative cases. They behave anomalously at high source output for low generator current levels; actually those operating regions are excluded for several other reasons. See Figs. 5 and 8.

Effect of Fluctuations.

Again:

$$\delta a = \frac{\tan \alpha}{\tan 2\theta} \delta\theta$$

which in independent of beam current in this case.

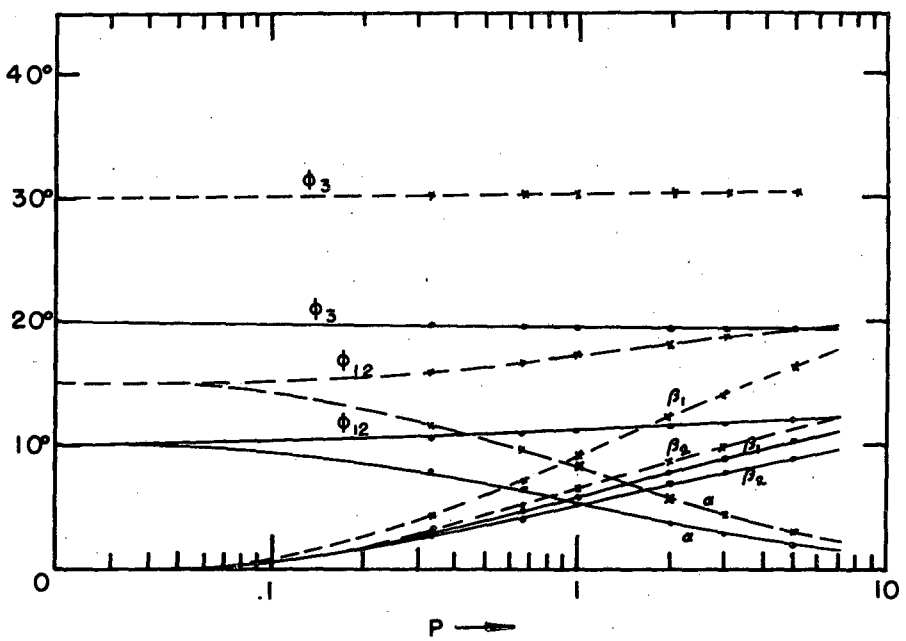

3 ϕ CONSTANT VOLTAGE

FIG. 16 BEAM & LOAD PHASE ANGLES AS FUNCTIONS OF (i_B)

SOLID LOCI $\theta = 30°$

DASHED LOCI $\theta = 45°$

CONFIDENTIAL MU3939

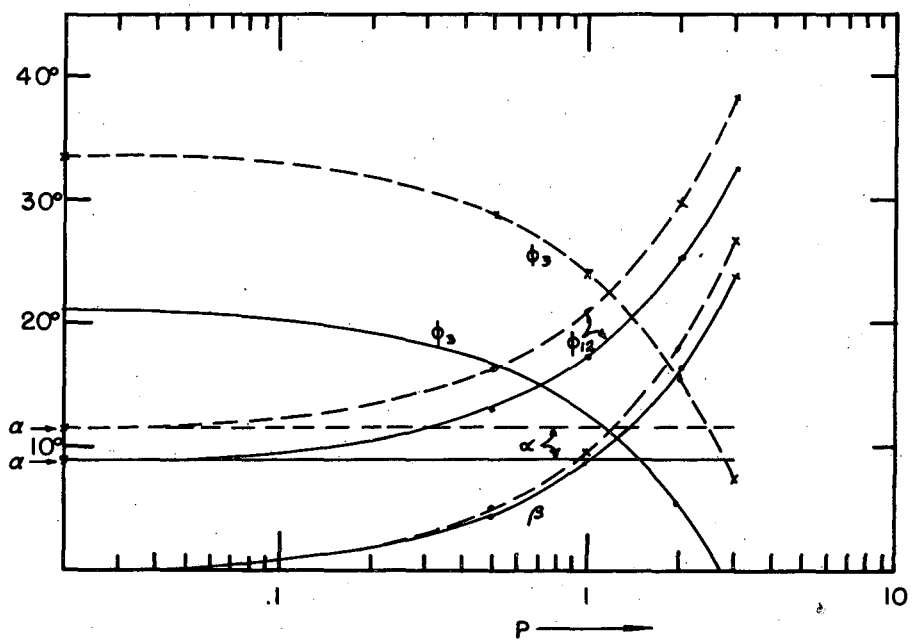

3ϕ CONSTANT CURRENT

FIG. 18 BEAM & LOAD PHASE ANGLES AS FUNCTIONS OF $P(i_B)$
SOLID LOCI $\theta = 30°$
DASHED LOCI $\theta = 45°$

MU3940

CONFIDENTIAL

The Q Reduction Effect.

As a general rule of thumb, our original guess that high beam currents would result in small "load" angles (α) is confirmed in most cases. The extent of shift is approximately that to be expected just from the reduction in effective circuit Q due to beam loading. There is a particularly simple asymptotic case which exhibits this: Consider again the single-mode MOPA system, this time taking $\omega = \omega_b \neq \omega_r$ (i.e., only the resonator is mistuned). Then the beam current and dee voltage must be in phase and $\phi = 0$.

For a parallel resonant system $Q = \frac{R}{X}$; if the system is additionally loaded:

$$Q_{eff} = \frac{R_{eff}}{X_{eff}} = \left(\frac{X}{X_{eff}}\right)\left(\frac{1}{1 + \frac{R}{R_b}}\right) Q$$

Since $i_b \ll i_{circ}$, then $X_b \gg X$, so that $X_{eff} \approx X$. Also, at resonance,

$\frac{R}{R_b} = \frac{V_m R\, i_B}{V^2} = P$, so one writes:

$$Q_{eff} = \frac{1}{1 + P} Q$$

Finally $\tan \theta_{eff} = \frac{Q_{eff}}{Q} \tan \theta = \frac{\tan \theta}{1 + P}$

Now θ_{eff} is the angle between V and i_d; examining the vector diagram (Fig. 10) it is seen that θ_{eff} is identified as α (when $\phi = 0$), so that:

$$\tan \alpha = \frac{\tan \theta}{1 + P}$$

But this same result is obtained from the more formally derived expression for $\tan \alpha$, for this case, upon substituting $\phi = 0$.

CONFIDENTIAL
SECURITY INFORMATION

CONFIDENTIAL

DECLASSIFIED

CONFIDENTIAL