UCRL 187 Cy 2

UNIVERSITY OF CALIFORNIA

Radiation Laboratory

TWO-WEEK LOAN COPY

This is a Library Circulating Copy which may be borrowed for two weeks. For a personal retention copy, call Tech. Info. Division, Ext. 5545

BERKELEY, CALIFORNIA

UCRL-187 c.2

DISCLAIMER

This document was prepared as an account of work sponsored by the United States Government. While this document is believed to contain correct information, neither the United States Government nor any agency thereof, nor the Regents of the University of California, nor any of their employees, makes any warranty, express or implied, or assumes any legal responsibility for the accuracy, completeness, or usefulness of any information, apparatus, product, or process disclosed, or represents that its use would not infringe privately owned rights. Reference herein to any specific commercial product, process, or service by its trade name, trademark, manufacturer, or otherwise, does not necessarily constitute or imply its endorsement, recommendation, or favoring by the United States Government or any agency thereof, or the Regents of the University of California. The views and opinions of authors expressed herein do not necessarily state or reflect those of the United States Government or any agency thereof or the Regents of the University of California.

UCRL-187

UNCLASSIFIED

MANUAL

for

SLOAN X-RAY MACHINE

U.C. HOSPITAL
San Francisco

By
John Francis O'Halloran
University of California
Radiation Laboratory
September 1948

SLOAN X-RAY MACHINE

Contents

I INTRODUCTION

1.10 General Description
1.20 Application
1.30 Operating Technique

II SYSTEM DESCRIPTION

2.10 General
2.20 Cooling
2.21 City Water Pump
2.22 Treated Water Pump
2.23 Air Blowers
2.30 Vacuum
2.31 Fore-Vac Pump
2.32 Diffusion Pump
2.40 High Voltage Generator
2.50 X-ray Treatment

III INSTALLATION

3.10 General

IV ADJUSTMENTS AND TESTS

4.10 City Water Pump
4.11 City Water Electrical Interlocks
4.12 Treated Water Pump
4.13 Treated Water Electrical Interlocks
4.14 Oscillator Blowers
4.20 Vacuum System
4.21 Vacuum Meters and Electrical Interlocks
4.22 Fore-Vac Pump
4.23 Diffusion Pump
4.30 High Voltage Generator
4.40 X-rays
4.41 Radiation
4.42 Target Adjustment
4.43 Treatment Cone
4.44 X-ray Absorption Measurements

Contents

V OPERATION

5.10 General
5.20 Morning Starting Procedure
5.30 X-ray Treatment
5.40 Technical Procedure

VI MAINTENANCE

6.10 Cooling
6.11 Treated Water Pipe Flushing
6.12 Air Filters
6.13 Motor Care
6.20 Vacuum System
6.21 Vacuum Tightness
6.22 Vacuum Leak Detection
6.30 Electrical System
6.40 Water Rheostat
6.50 Hydraulic Ports

VII CONCLUSION

7.10 General

SLOAN X-RAY MACHINE

I INTRODUCTION

1.10 General Description

The Sloan X-ray Machine is named for D. H. Sloan, Ph.D., who conceived the idea of developing high voltage by exciting a low loss resonant coil at its natural frequency in a vacuum tank. By properly setting up a tuned-plate, tuned grid-radio frequency generator, whose operating frequency is determined by the resonant coil, it was found possible to develop alternating voltages of the order of 1 million peak between the ends of the coil. X-rays are obtained by properly supplying an electron source biased to emit only during the positive peak level of the alternating voltage.

1.20 Application

The vacuum tank in which the X-rays are obtained is covered with lead shielding adequate for positive protection. The X-rays are allowed to escape through three openings, or ports which are located on east and west sides, and bottom of tank. From these ports sufficient X-rays are emitted for treatment of three patients at a time.

1.30 Operating Technique

It is necessary that a physicist set machine in operating condition and determine operation procedure every day. He then has to place over the port a filter of proper quality to remove the soft X-rays, and a cone of proper length so that the patient placed at open end is 80 cm away from target. When the patient is in position, the operating technician at the Treatment Control Desk turns on the machine and sets X-ray$ bias ~~generator~~ voltage for proper emission current and radiation level. The opening and closing of ports at the control desk permits individual patients to receive appropriate radiation or dosage. The dosage and exposure time are recorded at the operator's desk.

II SYSTEM DESCRIPTION

2.10 General

All electrical work on this machine is protected from overload by "Deion" circuit breakers, which prevent any wires or equipment from overheating. The breakers are located on the left side of the control rack, and must be reset in case of overload. All equipment is operated by push-buttons after proper conditions (proper water flow for cooling etc.) are established. An electrical interlock system automatically turns the equipment off if any failure occurs, and only the correcting of the failure permits restoration of operation. A green ready-light indicates establishment of proper conditions; a red light indicates that the equipment is operating. The electrical system is presented in detail on UCRL schematic Dwg. 2V6495. Such a setup allows unskilled operators to handle the equipment safely, while accentuating the need for proper maintenance.

2.20 Cooling

All cooling systems are electrically interlocked with flow switches and blower vanes to provide positive protection to the unit being cooled. Both pumps and heat exchanger are mounted in the penthouse on the roof, while the blowers are in the Treatment Room Attic.

II SYSTEM DESCRIPTION (Cont.)

2.21 City Water Pump

The main cooling source is city water, stored in a 50,000 gallon tank on a hill 75' above the control room. This water is used to cool the two vacuum pumps and the heat exchanger, and supplies water for the water rheostat. During operation of the machine, water is returned to reservoir by means of a pump, but at night, or when the machine is not operating, water for vacuum pumps is automatically carried off through a drain to the sewer.

2.22 Treated Water Pump

For cooling X-ray and oscillator components, where a high electrical resistance path is essential, distilled water is used. This distilled water recirculates in a closed system composed of a pump, heat load and heat exchanger. City water cools the distilled water via the heat exchanger. A 5 gallon expansion tank on inlet to circulating pump maintains a positive head and allows thermal expansion space for the water. An electrical overheat interlock on the treated water heat exchanger outlet assures cooling operation.

2.23 Air Blowers

The metal to glass seals for the oscillator tubes are cooled by a blast of air directed through an insulated housing. Two blower fans draw cool air from outside the building. Warm air is taken out via a separate exhaust duct.

2.30 Vacuum

The X-ray tank has a continuously pumped vacuum system consisting of a Kinney fore-vac mechanical pump, 6" booster diffusion pump and a 14" oil diffusion pump. The operating ranges of the vacuum interlocks employed can be determined from the Vacuum System Reference Chart UCRL Dwg. 2V8263. By a careful study of this chart, one can learn the various units employed, and their respective ratios. This chart also shows the operating ranges of various vacuum meters and pumps.

2.31 Fore-Vac Pump

The Kinney pump is located in a pit below the control room floor. It is needed to obtain low enough fore-vac pressure or exhaust vacuum to allow the diffusion pump to function. This fore-vac pump is capable of pumping to base pressure of 10 microns, but usually operates connected to exhaust of booster diffusion pump around 20-30 microns of pressure. Thermocouple pressure gauges are placed at strategic places in vacuum system. A selector switch at control rack allows individual gauges to be read on pressure micron meter on same panel.

2.32 Diffusion Pump

This high vacuum pump is composed of a 14" three stage oil diffusion pump in tandem with a 6" double stage booster pump. The diffusion pump stands next to the shielding wall between the Treatment Room and the Control Room. It is connected to the 24" manifold coming out from the X-ray tank. The system is electrically interlocked so that the diffusion pump pressure must be lower than 200 microns before the pump heaters can be turned on. A roughing by-pass valve system allows the tank to be brought down to this level of vacuum from atmospheric pressure, while the diffusion pump is sealed at a low pressure. The pump maintains the tank at 0.1 to 0.3 microamperes of pressure (10^{-5} to $3X10^{-5}$ millimeters of pressure) as read on Ion gauge Power Supply on Control Rack.

II SYSTEM DESCRIPTION (Cont.)

The entire system can be brought to this vacuum in one to one and a half hours, depending upon conditions for which it was opened.

2.40 High Voltage Generator

Two RCA#9C21 triodes are connected in a push pull tuned-grid tuned-plate oscillator circuit to supply the resonant coil with energy. A coupling loop connecting both tube anodes passes through a vacuum seal into tank where resonant coil is supported. This vacuum seal is so constructed as to allow coupling to be adjusted from top of vacuum tank. Since no supply voltage exists on this resonant coil, one end can be mounted directly to ground, while on the other end is mounted a tungsten target directly in front of filament. Voltages that appear across the coil will now exist between ground and target end of coil. Cooling water for resonant coil and target is injected at grounded end of coil. The tuned-grid circuit is so set that the oscillator will always oscillate very near the resonate frequency of coil. This osc. is supplied with 60 cycles alternating voltage from a 120 KW - 18KV/4KV transformer. Since this oscillator is an electronic tube generator, target voltages will only be generated during the positive half cycle, of the transformer voltage. Voltage applied to the plates of the oscillator tubes is varied by means of a limiting resistor consisting of a water rheostat in which the distance between the electrodes is controled from the operator's position.

2.50 X-ray Treatment

The treatment of the patient is to be determined mainly by the medical radiologists in charge. It is the job of the physicists on hand to determine radiation output weekly, so that the medical director always knows what he has to work with. The radiation output has to be watched closely and checked ~~roughly~~ every morning when operating conditions for the day are established. It is necessary that the ratio of X-ray output from both the east port and bottom port to the west port be determined, since output is monitored during treatment at the west port only. The operating technician only needs to turn on high voltage and adjust X-ray bias for the proper emission. The ports where patients are to be exposed are preset to open automatically. The operating technician will observe the corrected dosage on the Integron. The time of opening of ports until the last port closes is automatically recorded at the Treatment Control Desk.

III INSTALLATION

3.10 General

The modernization of the Crocker X-ray machine and the entire installation was accomplished with the assistance of University of California Radiation Laboratory Personnel. They will be available for consultant purposes at any time in the future.

IV ADJUSTMENTS AND TESTS

4.10 City Water Pump

It is necessary that the valve on the exhaust line of this pump be throttled in order that the pump maintain a constant flow and consequently a positive pressure at the inlet side of the pump.

IV ADJUSTMENTS AND TESTS (Cont.)

With this pump operating correctly, the outlet pressure is about 50 psi, as read in the control Room, while the inlet pressure is about 0 psi, or a slight bit negative because the gauge is approximately 10 feet lower than pump inlet. It is also necessary to throttle the outlet valve on the heat exchanger so as to maintain enough positive head to circulate water through both vacuum pumps and water rheostat.

4.11 City Water System Electrical Interlocks

The water flow for the Kinney Fore-Vac pump needs to be checked frequently, since this is the only devise where the water cooling is not electrically interlocked for flow failure or temperature overheat. The Kinney pump is sturdy and reliable enough to operate for a time, at least, without cooling water, but the base pressure would not be as low, nor would the pump operate as efficiently. Actually all flow switches and overheat devices should be checked on a monthly basis. They are reliable enough for daily operation but may stick or plug up due to impurities in the water. The best test for the electrical interlocks is to stand by while the water is shut off and watch operation. The flow switch interlock will immediately open electrical circuit and regisiter trouble. Trouble will not show up immediately in case of temperature overheat interlock, such as that used on the Diffusion pump.

4.12 Treated Water Pump

The by-pass valve on the treated-water manifold should be kept closed unless inlet manifold pressure exceeds 80 psi. The treated water expansion tank must be kept half full at all times to assure a positive head on the inlet of the pump.

4.13 Treated Water Electrical Interlocks

To assure heat exchanger action it is necessary that the city water pump be running before the treated water pump is started. System is so interlocked electrically that treated water pump cannot be turned on unless city water pump is first energized. A time delay relay controls the operation of the pumps so that neither pump stops running until 15 minutes from the time the off button is pushed. This insures the removal of all residual heat after operations. The electrical over heat interlock should be checked for operation. This is set to open various circuits if the treated water entering manifold from the heat exchanger rises above 80° F. Individual flows should be adjusted so that outlet temperature never rises above 70° C. Flow interlocks protect for 80% to 120% determined flow. These flow interlocks work best from 1 gpm to 25 gpm.

4.14 Oscillator Blowers

Three blowers are energized when treated water pump is turned on. Two blowers bring air from outside and the third blower exhausts air to the outside. In adjusting the tube blowers for transformer cooling air, it must be remembered that the blowers must primarily keep the tubes cool. On hot days this adjustment will prove quite important, since the metal to glass seal on the tubes must not go above 150 deg. C. Air flow is assured in these two blower ducts by the electrical blower vane interlocks. These can be checked easily once one learns the familiar click they make in operation and watches the indicator lights on control panel.

IV ADJUSTMENTS AND TEST (Cont.)

4.20 Vacuum System

When making vacuum system adjustments which bring about any possibility of a rise in pressure (such as installing a new ion gauge tube or changing the oil in the fore-vac pump), it is advisable to close the gate on top of the diffusion pump, thus sealing the tank. This procedure is suggested until familiarity with the operation of the vacuum system is gained in order to avoid the drifting of oil particals from the diffusion pump back into tank (which results from increase in fore-vac pressure.) It is this diffusion pump oil drifting into the tank which causes so much trouble in outgassing during operation.

4.21 Vacuum Meters and Interlocks

4.21A The Geissler voltage has a direct relationship with the vacuum at the point of installation in system, but since this interlock has been found useful only for sudden unexpected increases in pressure, the voltage setting is not critical. The Geissler is approximately set at 3000 volts, corresponding to approximately 100 microns of pressure.

4.21B The thermocouple heater current (which is indicated on the ammeter in the panel) should be adjusted for the individual thermocouple gauge for which the selector switch position is set. This adjustment is made by means of the rheostat knob on the panel. The heater current setting is factory calibrated and the decimal addition to six amperes is marked on each thermocouple gauge stem. With proper heater current, the pressure is read in microns on the calibrated pressure meter.

4.21c The ion gauge power supply has on its front panel the meters necessary for adjusting ion gauge conditions so that the proper relationship can be set up between emission current and ion current, thereby making the ion current a direct measurment of pressure. The filament current (usually below two amperes) is automatically regulated to obtain the emission current setting. The emission current is set at 1.15 ma. by the knob on the panel. The zero adjust knob (which is used to zero the pressure microammeter) should be set with range switch on the scale to be used and the filament switch in off position.

4.21D The Ion Gauge Vacuum Interlock is adjustable between 30% and 200% of the pressure meter scale reading. This usually is set high enough so that the meter can go to the full extent of meter reading without opening the interlock. In order to reset interlock after it has once opened, it is necessary to momentarily press reset button.

4.22 Fore Vac Pump

The Kinney fore-vac pump Model #8-8-11, is a water cooled pump with a pumping speed of 43 cfm. The oil flow valves should be adjusted for the best base pressure of pump. It is very important that the oil used to seal the vacuum pumping section be changed frequently. To check the base pressure of this pump the 2" gate valve above pump is closed and fore-vac pump thermocouple gauge is observed. This should read below 20 microns.

4.23 Diffusion Pump

The 14" oil diffusion pump was found to operate most efficiently after installtion with 1.8KW of heater power. There is an auxiliary 1 KW

IV ADJUSTMENTS AND TESTS (Cont.)

heater (with control switch on diffusion pump terminal box) for fast heating after diffusion pump has been off. This auxiliary heater should not be left on once pump has started to function at a low pressure. Heater operating conditions can be determined from current meter on terminal box. The oil should be kept up to the middle of the level sight gauge. To maintain this level, three quarts of Litton oil are required. This oil supplies both the 14" and the 6" diffusion pumps (via the equalizer line.) The water cooling coils should always have enough water circulating so that they are just above room temperature at the bottom of pump wall. If water flow ceases in this cooling coil, the mercoid clamp-on overheat switch removes the power from the pump heaters. This temperature interlock is set about 150° F. Also if the oil level is too low, the temperature at the bottom of the pump will increase to about 300° C. at which time the GE over-heat interlock removes the power from the heaters. Also, when the pump heaters are off, the city water continues to go down the drain after cooling the pump, until the temperature at the bottom of the pump has reached 100° F. Then another GE temperature control switch closes a solenoid valve which stops the water flow and thereby prevents further cooling.

4.30 High Voltage Generator

4.30A The filament voltage of each RCA #9C21 tube is adjustable between 17.0 and 20 volts as read on the oscillator tube filament voltmeters on the same rack. To eliminate interference of these voltmeter readings, the variacs on the emmission control panel should be de-energized.

4.30B The limiting series resistor (water rheostat) prevents the full transformer voltage from being applied to the plates of the oscillator tubes, thus allowing them to start oscillating at a low voltage and minimizing the power surge on the 4KV line. The water rheostat can be controlled manually or it may be set to operate automatically so that it decreases the resistance to a predetermined value, thus supplying the oscillator with repetitive operating voltages. The various automatic water rheostat positions are set from a selector switch at the control panel.

4.30C The osc. plate transformer primary is supplied from a 4 KV line and draws between 90 and 105 KW, which is far enough below its rated value of 120KW for safe operation. The secondary voltage can be adjusted by tap switches on transformer secondary to 12-14-16 and 18 KV. It will be found necessary when installing a new tube to start at the low voltage tap and gradually work up. Also, if any experimental work is to be done on the oscillator, it is a good policy to go to a low voltage tap for safety of equipment. In normal operation it was found that a compromise had to be reached between the 16 KV and the 18 KV taps. The 18 KV might appear to allow a higher X-ray output, but the danger of flashover between water rheostat electrodes is increased: while the 16 KV tap draws too much average current and saturates the transformer. The tap (16 KV or 18 KV) which gives the highest radiation output should be used. Whichever one is used, caution must still be observed in letting the water rheostat electrodes get too close together because a transient in the high voltage line will cause an arc between these electrodes. This is always undesirable and can be very dangerous if the arc persists long enough to cause steam to be formed in the water column. The risk is reduced if the overload relay is set low enough that power is removed quickly after transient fault.

ADJUSTMENTS AND TESTS (Cont.)

4.30D Once oscillator voltage is applied it is necessary to observe grid current and the peak to peak amplitude of the pattern on the scope. Average oscillator current can be read at meter on panel and target voltage can be seen on oscilloscope connected to a pick-up probe in the tank. It will be found that there is a position of the grid tuning loop which will give maximum peak to peak voltage on the target as indicated on the scope. When the grid loop is continously turned in one direction it is found that the target voltage reaches a maximum value but the grid current continues to increase. The grid current meter should read approximately 0.6 milliamperes or less. An optimum point can be found in grid loop position for both maximum target voltage output, minimum grid current and stability of oscillator. This is best determined by familiarity with oscillator.

4.30E Adjusting the anode coupling loop varies the impedance of the oscillator plate load. By separating the loop from the resonant coil, the impedance is decreased, thus lowering the plate voltage and increasing the cathode current of each tube as seen on respective meters at control panel. It is not good practice to let the average cathode current of each tube rise above 3.0 amps. Since the sum of the average cathode current for the two tubes exceeds the 5 amps D.C. rating of the transformer secondary, there is little to be gained by further exceeding this 3 amperes.

4.30F The taps from thecoupling loop to the inductor (the ends of which connect to the plate of each tube) will also have an effect on the plate impedance. These taps can only be adjusted by trial and error. It is of primary importance that the individual tube cathode currents do not differ by more than 0.5 of an ampere. With this condition maintained, the taps are then adjusted for maximum target voltage as observed on the oscilloscope.

4.40A X-ray Output

Primarily, hard or high voltage X-rays are desired. The generation of soft X-rays are eliminated by biasing the filament so that electron emission occurs only at the peak voltage of the 8 megacycle alternating target voltage. The X-ray filament current should be set at 65 amperes for a .045 inch diameter tungsten filament. The bias voltage will depend upon the physical setting of filament and bias block in vacuum tank. This bias voltage should be used to adjust the emission current to keep a constant radiation level of 20 r/m at 80 cm from target at west port. If target voltage is high, this 20 r/m can be obtained with an emission current of 1 ma; however if target voltage is low it will take a higher emission current. This emission current should not be allowed to exceed 3 ma for any length of time because this will shorten the life of the target. Actually the life of the target is shortened by a radiation levelhigher than 20 r/m since a higher target voltage at a low emission current causes as intense a heat at target surface as a high emission current with a low target voltage.

4.40B The distance from the X-ray filament to the target should beset at an electrical minimum. Too small a distance will cause frequent flashovers from the target to the bias block as indicated by sudden disappearance of the bias voltage. The filament assembly should be moved away from the target in quarter inch steps until the bias voltage change is as observed with normal outgassing. Experience with this set-up enables one to know just what this minimum distance is.

ADJUSTMENTS AND TESTS (Cont.)

4.41 Radiation

Radiation exposure is measured by the Integron at the west port. The calibration ratio for this instrument has to be determined daily for actual patient dosage at each of the individual treatment cone ends. The adjustment of this Victoreen instrument is well described in manual supplied by manufacturer.

4.42 Target Adjustment

The most difficult adjustment is the proper placement of the target so that the electrons hit the tungsten. This can only be done accurately by observing an intensity meter and emission current meter while adjusting target position. Although a definite peak intensity can be observed for constant emission current, it is not easy to maintain the target in this position, relative to filament, due to the physical mounting of target. This alignment, though very difficult is very important since the effective X-ray voltage may be as much as 50% lower by misalignment.

4.43 Treatment Cone

For the purpose of knowing where the treatment beam is being placed, it is essential that the beam hit exactly in the center of the cone face. This can be determined by locating the center of treatment cone face with lead crosslines and exposing a film over these crosslines. Quadrants made by lead crosslines should be marked so that orientation can be established after film is developed. The treatment cone mounting should be shimmed until the center of the X-ray beam coincides with the center of the cone surface. In some cases it will be found necessary to move target to make this alignment. In such cases, it is again necessary to realign target for maximum X-ray intensity. It will probably be necessary to repeat these steps several times until an optimum condition is found.

4.44 X-ray Absorption Measurement

4.44A The only means provided to determine the peak voltage of the target is by X-ray absorption measurement. This is a difficult method, but since it is the effective peak voltage of the X-rays with which one is really concerned, this method is more direct than might at first be apparent. The quality of the X-ray beam is determined by the half value layer (i.e. thickness of absorption material which reduces the intensity of X-ray beam to half its original value). A close approximation of the target peak voltage is obtained by the half value layer after filtering beam with at least 4 cm of lead. The intensity of X-rays corresponding to the peak voltage is very small, but this is true even with a constant potential machine. The knowledge of the X-ray quality is important to the radiologist so that he can compare various sources.

4.44B The monochromatic effective peak X-ray energy is obtained by plotting an absorption curve of the X-ray beam. This curve is plotted on semi-log paper with the thickness of absorbing material as the absissa and the relative intensity as the ordinate. The ratio of the X-ray intensity with certain thickness of absorbing material to the initial X-ray intensity with no absorbers determines the relative intensity.

ADJUSTMENTS AND TESTS (Cont.)

The absorption curve can be represented by the equation:

$$\text{Log}_e \frac{I}{I_o} = -\mu \times \rho$$

Where I_o is initial intensity
I intensity after absorption
μ the mass absorption coefficient
$\times$ the thickness of absorbing material
ρ the density of absorbing material

This equation can also be expressed as

$$\frac{I}{I_o} = e^{-\mu \times \rho}$$

By finding the half value layer of absorbing material ($\times$) which makes $\frac{I}{I_o} = \frac{1}{2}$, one can readily solve for the absorption coefficient (μ). If lead is employed as the absorbing material, this absorption coefficient can be interpreted in terms of voltage by reference to G. Failla's experimental data which is plotted on curve sheet "Mass Absorption Coefficients of Lead for X-rays."

4.44C The method employed to obtain this absorption curve is probably the most important phase in determining the quality of the X-ray beam. The technique of this measurement can be observed by study of UCRL drawing #2V9293. Here it is seen that the beam is colliminated by an octagonal hole in a 3 inch thick lead block. Absorbers are placed under lead block in octagonal beam and relative intensity measured as absorber thickness is varied. The intensity meter must be placed far enough below absorbers so that scattered radiation, caused by absorption does not appreciably affect meter reading. Meter is placed in lead chamber with 2" thick lead walls which minimizes scattered radiation about room from affecting meter reading. Also the chamber is lined with 1/4" aluminum to minimize back scattering from the beam terminating on inside walls of chamber. The 3" thick lead block rests on table which has large castors on it so that it can be moved about under X-ray tank to attain vertical collimination. This is determined by exposing X-ray film at bottom of table and measuring across flats of octagonal figure on film. Film must be so marked that after development it can again be placed in same position as when is was exposed. When this figure is a perfect octagonal picture on film, that is all four across flat measurements are equal, then it follows that collimination is vertical. It is now necessary to align lead hhamber so the beam passes through the center of 2-1/2" chamber entry hole without hitting the sides. Such misalignment would cause secondary radiation to affect the measuring instrument. The beam size at the chamber entry hole is approximately 2-1/8" across corners. This beam size is necessary to completely cover the 250 mr Victoreen chamber. Passing of the beam exactly through center of chamber entry hole is determined by exposing a film through a suitably marked mask positioned by alignment studs on chamber top. This mask is nothing more than a 1/8" thick lead sheet with holes indented to form cross lines marking the center of chamber entry hole and a reference symbol showing orientation. Rough alignment of chamber can be checked this way, while final alignment has to be checked by actually putting a smaller film inside the chamber under the circular entry hole. Secondary radiation caused by beam hitting side of entry hole will show on this smaller film. When a very clearly defined octagonal picture is obtained, mask cross lines are in center of picture, and across-flat measurements of octagonal are all equal, collimination is then completed. This is a long and tedious job, but further study of this sort of test will explain the need of its accuracy and precision.

ADJUSTMENTS AND TESTS (Cont.)

4.44D Proceed to obtain intensity meter readings as absorbers (~~perferably lead~~) in beam collimination is varied in thickness. Survey meter is placed as shown in UCRL drawing #2V9293 to measure original X-ray quantity. Since the survey meter bears a direct ratio to the initial reading in chamber without the absorbers in place, the relative intensities for the absorption curve can be obtained from these two meter readings. This gives the relative intensity that is plotted vs. absorber thickness to obtain the absorption curve.

V OPERATIONS

5.10 General

When the machine and equipment are left in proper condition, it is possible for anyone to start operation by following simple "cook-book" directions outlined in the following "Morning Starting Procedure." The electrical interlock system will permit operation of the X-ray machine only if everything is working properly (water flow valves, etc properly set). The section on "Technical Procedure" covers the operation more in detail and is the concern of the physicist responsible for proper operation of equipment.

5.20 Morning Starting Procedure

5.20A Vacuum must be lower than 0.5 ua before proceeding. After ascertaining from the previous days operating condition that machine is ready for use and observing that the "Fore-Vac Pump" and "Diffusion Pump" push button "ON" lights (red) are lit, the first step is to check the reading of the "Microamperes Pressure" meter on the Ion Gauge Power Supply. This should be read with "Range" switch set on "1" and should read below 0.5 ua. The "Range" switch is then set to "25" so that with initial tank outgassing, the "Ion Gauge Protection Unit" will not turn off the ion gauge filament. If the "Ion Gauge Protection Unit" functions and turns off the ion gauge filament, it is necessary to press the "Reset" button on "Ion Gauge Protection Unit" panel before the vacuum can be read.

5.20B Turn on the "City Water Pump". The "Diffusion Pump Cooling" indicator light(green) will go out, showing that cooling water in this pump is being recirculated by the city water pump and is no longer going down the sewer drain. The "Treated Water Pump" ready light (green) should now be lit.

5.20C Turn on "Treated Water Pump". After a short period (max. 1 min.) ready lights should appear above "Oscillator Filament" and "X-ray Bias & Filament Supply" push buttons.

5.20D Adjust the oscillator filament variacs and turn on filament power. This is accomplished by setting "#1 Osc Fil ± 10% Volt Adj" and "#2 Osc Fil ±10% Volt Adj" variacs to "0". Proceed to turn on "Oscillator Filament". Adjust "#1 Osc Fil ±10% Volt Adj" variac so that the "#1 Osc Fil" meter reads 19.5 V. Repeat adjustment with #2 Osc Fil. Readjust after about one minute warm up time before proceeding to next step.

5.20E Adjust X-ray bias voltage variac and X-ray filament current variac and turn on power. This is accomplished by setting "X-ray Bias KV Adj" and "X-ray Fil I Adj" variacs to "0". Set the three treatment control switches so that control is from rack. Proceed to turn on "X-ray Bias & Fil Supply". The "High Voltage" ready light should now be lit.

V OPERATIONS (Cont.)

5.20F Outgas the vacuum tank. This is done by turning on "High Voltage" and decreasing water rheostat resistance slowly until outgas in tank causes high voltage overload relay to open breaker. The "High Voltage" ready light will not appear until the water rheostat returns to maximum resistance. It will be necessary to repeat this outgassing procedure until machine will stay on at approximately the same oscillator "Peak Reading Kilovolt" meter level as prescribed in previous days operating procedure. This should not take longer than 5 minutes, but might take as long as thirty minutes.

5.20G Set X-ray Fil current at 65a. While holding finger on "X-ray Filament Operating" button, set "X-ray Fil I Adj" variac by turning knob clockwise until "X-ray Fil" current meter indicates 65a. Proceed to set the three switches on treatment control panel so that control is now at "Operators Control Desk." All further adjustments can be made from "Operators Control Desk."

5.20H Adjust X-ray bias voltage to 5KV. This is done by turning "X-ray Bias KV Adj" variac knob clockwise until the "X-ray Bias" voltmeter on "Operators Control Panel" indicates 5KV.

5.20I Make adjustments for radiation level. After setting the water rheostat control on "Automatic" at the normal tap setting, proceed to turn on "High Voltage". Then the "X-ray Bias KV Adj" variac is adjusted for the proper emission current as prescribed in operating procedure of previous day.
CAUTION: Do not allow emission current to exceed 3 ma.

5.20J Proceed to treat patients.

5.30 X-ray Treatment

Once machine has been set up as prescribed in the section on Morning Starting Procedure, the operator sets the patients in place as prescribed by the medical radiologist. The placement of patients and the adjustment of individual port shutters for beam size is to be included in this prescription. When the patients are in place, preset the ports that are to be used by pressing the appropriate "Preset" buttons. Ascertain which patient is to receive the least amount of radiation and set the Integron for that patient's dosage, (correcting for port Integron ratios as necessary.) Turn on the high voltage and adjust the emission to the appropriate daily radiation level. The ports will open automatically and remain open until closed by the Integron. Check that the ports actually open by observing the "Open" light (red) during each treatment. Reset Integron for the next patient (allowing for previous dosage and also port Integron correction), and operate the preset buttons for the remaining patients. Do not preset the ports where patients have received full dosage. Ports which are supposed to be closed should give the appropriate "Closed" light (green). The same procedure is repeated until all patients have been treated.

5.40 Technical Procedure

5.40A After a thorough study of UCRL overall schematic #2V6495, one can readily see the use and layout of the electrical circuits. The first step in use and control of any electrical item is the Deion circuit breaker which has to be closed before operation can be attempted. On overload these breakers will open and it is only necessary to push them in the off direction to reset them.

V OPERATION (Cont.)

These must then be pushed to "On" position for usage. When operation is to be started, all circuit breakers should be set in "On" position. The "Ready" light (green) on the push button panel indicates that the individual breaker and any associated interlocks are closed. When this light is lit, it means that equipment is ready to operate when "On" push button is pressed, actual operation is indicated by the "On" light (red). The vacuum system is the first thing to be concidered. When establishing a vacuum, it is a wise policy to pump on each separate section working away from main fore-vac pump, proceeding from the pump itself, to the line leading to the diffusion pump, then on to the diffusion pump and finally on to tank via diffusion pump by-pass line or roughing line. This is possible because of the vacuum modified 2" gate valves which separate the various sections. During this process vacuum is indicated by the thermocouple gauges connected to the individual sections.

5.40B Assuming the vacuum system has been off, the first step is to set the automatic fore-vac valve on manual set by pressing the "On" button of the second set from left of push buttons on push button panel. The first set has no ready light and is just a spare. After this circuit is set, it is necessary to manually place vacuum valve in open position, which will be held there by electrical solenoid toggle. When this is in position, a micro-switch is tripped which puts ready light on fore-vac pump push buttons.

5.40C Although ready light appears on fore-vac pump push buttons on control rack, this pump has to be turned on down in pit by control buttons mounted on pump stand. This was so arranged that pump inspection is made while pump is starting. This pump should be started under no load, that is started with its intake open to atmosphere. With the large 2" gate valve at pump inlet closed, the Kerotest valve should be opened and then closed again as soon as pump is running. When fore-vac pump is started, thermocouple panel power is applied and if power switch on front of panel is in "On" position, pressure gauge is ready for use. After a short period (approximately 15 minutes) the base pressure of pump can be determined from fore-vac thermocouple gauge. This pressure should be below 20 microns.

5.40D Proceeding to test fore-vac line the 2" gate valves are closed at diffusion pump end and opened at fore-vac end. Here again the pressure can be obtained from the meter reading of thermocouple gauge on fore-vac pump. This pressure should now read lower than 30 microns and after sufficient pumping lower than 20 microns.

5.40E Closing large valve on top of diffusion pump makes it possible to determine diffusion pump vacuum tightness after opening 2" gate valve on line connected to booster diffusion pump outlet. It is now possible to read thermocouple pressure at both fore-vac pump and outlet of booster diffusion pump.

5.40F When the pressure as determined from the thermocouple gauge on outlet of booster diffusion pump is around 100 microns, the Geissler electrical interlock should function as shown by indicator light "Geissler Holding" and allow the automatic fore-vac valve to be set in automatic. Pressing "Off" button of automatic fore-vac valve set of push buttons establishes this condition.

V OPERATION

5.40G With automatic valve being held open by Geissler electrical interlock system, diffusion pump ready light should show that diffusion pump heaters are ready. These heaters should be energized and oil allowed to heat for at least 15 minutes before valve on top of pump is opened.

5.40H If X-ray tank is sealed vacuum tight, fore-vac pump can be used for roughing down from atmospheric pressure to 100 microns, a point where diffusion pump can be used. To prevent Geissler interlock from operating due to increased pressure from tank, automatic fore-vac valve is set back in manual position. The electrical interlock system at this time removes power from diffusion pump heaters and allows power to remain on fore-vac pump as well as automatic fore-vac valve. It is also necessary to close the 2" gate valve on outlet of booster diffusion pump to prevent oxidation of hot oil with increased pressure. The roughing valve can then be opened, thus by-passing the diffusion pump. The tank pressure can now be read with the appropriate thermocouple gauge on the pressure meter of the thermocouple panel.

5.40I As soon as the "Geissler" indicator light (green) shows the system interlock function again, the automatic valve push button should be reset into automatic. The Geissler should be ready about 15 minutes after roughing valve isopened if tank is vacuum tight. The 2" gate valve on the booster diffusion pump exhaust should be opened again and diffusion pump heaters energized for about 15 minutes before pump is put into use. When tank thermocouple reads a around 100 microns of pressure, the roughing valve should be closed and large valve on top of diffusion pump opened.

5.40J The ion gauge power supply voltage was supplied when diffusion pump heaters were turned on. If power switch on front panel of IGPS is in "On" position, the unit should be ready for use. Making sure that the 2" gate valve on ion gauge is opened so the ion gauge is connected to the vacuum system, it is only necessary to get ion gauge filament current on. This is done by putting switch on IGPS front panel to "Normal" position and pushing "Reset" button on IG Protection Unit panel front. With IGPS "Range" switch set at "100" this interlock should hold. It might be necessary to press "Outgas" button on IG Protection Unit panel, but this should not be held for long. The thermocouple gauge on tank should now be reading lower than 10 microns.

5.40K Machine is now in condition to proceed with Morning Starting Procedure instructions. It will first be observed that the vacuum is not low enough, but after an hours pumping time, this pressure will be down to less than 1 microamp as read on the IGPS "Microamperes Pressure" meter. It is advisable to proceed to outgas tank.

5.40L Once a repetitive setting is determined for the water rheostat, it is necessary that X-ray bias operating range and X-ray emission current be specified for daily operation. These are adjusted so as to have 20 r/m at 80 cm from target at the west port. X-ray output being properly obtained, it is necessary that the calibration ratio be established between the end face of the cone at each port and the reading of Integron. This is done by placing a Victoreen Chamber at center of cone face and comparing this chamber reading to Integron reading. The chamber should have full scale reading of 100 roentgens and should be exposed to about three quarters full scale. This data should be determined every day and the information then turned over to the operating technician.

VI MAINTENANCE

6.10 Cooling System

The cooling function of the water system is essential to the operation of the machine and the maintenance of this system probably will require the most care. Contamination in the lines may plug the various flow meters so that they do not function properly. These flow meters must frequently be given visual inspection for sluggishness and inconsistant operation, etc. If these conditions exist the flow meters must be carefully taken apart and cleaned, and special care to maintain calibration should be observed in reassembling.

6.11 Treated Water Pipe Flushing

The treated water piping system should frequently be flushed by opening the drain valve and admitting clean water into the expansion tank while pump continues to circulate water. If this is done with ordinary city water, it should be completely removed from the system. This is best done by flushing the system with the treated water to be used. The system should then be filled with treated water.

6.12 Air Filters

The filters on the intake to oscillator blowers should be cleaned out about once a month. It is important that these be replaced in the intake holder so that the air flows in the same direction as it did before they were removed. This prevents any residual dirt from later getting into the system.

6.13 Motor Care

Blower motors and pump motors require regular lubrication and oiling. If the bearings seem to be stiff, it might be advisable to disassemble and clean making sure to pack well with grease when reassembling.

6.20 Vacuum System

The only care that the vacuum pumps need other than standard lubrication and oiling of fore-vac motor is to check the condition of the pumping oils. For normal operation the fore-vac oil should be changed every two weeks. In addition, it should be changed each time the tank is pumped down from atmosphere. This requires 5 gallons of DTE Medium-Heavy oil. The diffusion oil level should be kept to the center line of glass sight gauge and should be changed about every 6 months. This requires 3 quarts of Litton oil.

6.21 Vacuum Tightness

The rate of rise of the vacuum in the tank (the pressure increase per unit time after tank is sealed by the large valve on top of diffusion pump) is a direct indication of vacuum tightness of tank. This should be checked when the pressure is high and vacuum trouble is suspected. Familiarity with this procedure should be established.

6.22 Vacuum Leak Detection

Vacuum leaks can frequently be detected by applying acetone at the suspected location of the leak. If the leak is actually there, the ion gauge reading will increase rapidly, and after a short time decrease to a normal reading.

6.30 Electrical System

The electrical system is designed for minimum maintenance. There is very little that can be done until something actually goes wrong. By making a thorogh study of UCRL overall schematic #2V6495, one can learn to quickly

VI MAINTENANCE (Cont.)

remedy the trouble. It is necessary to have a stock of essential spare parts on hand to replace components immediately as they wear out. All stock items should be actually tested in the machine to ascertain their working condition. Any electrical changes that are made should be marked on print #2V6495 and on the individual component prints so that these drawings will always be up to date. This will permit quick and positive trouble shooting.

6.40 Water Rheostat

Due to the high temperature developed in the water rheostat, the calcium products come out of solution and deposit themselves on the negative electrode. This forms a high resistance coating on the electrode which has to be removed and cleaned about once a month, depending on usage of the machine.

6.50 Hydraulic Port

The motor for this hydraulic pump is designed to operate on 6 volts DC but is installed to run on 8 volts AC. This causes more heating than designed for originally, but the short operating cycle makes this usage possible. The oil reservoir for this pump must be replenished at least once a month, due mainly to oil leakage at the pistons. SAE #20 oil should be used.

VII CONCLUSION

7.10 General

At the time UCRL personnel completed this job, the high voltage would remain on for periods of about 2 to 3 minutes. This short operating period was due to outgassing of the tank which caused the overload breaker to open the 4KV contractor on primary of high voltage transformer. It was hoped that after vacuum pumping and application of high voltages to the tank, this operating period would increase. Since an outgassing period of more than a week is impractical it is suggested that a better means of pumping the space between copper liner and the steel tank be provided. Vertical slots approximately ½" wide and 30" long in the sides of copper liner would increase the pumping speed of this space on the sides. Pumping speed of the space around the bottom and top can be increased by means of 1" circular holes. Care must be exercised neither to remove copper from a high current path, nor to leave any copper edges pointing toward high voltage.

It also seems apparent that better high voltage transformer operation would result if a means of lowering direct current from secondary is developed. Pulsing of oscillator grids so that tubes do not draw current during the time of low transformer voltage would accomplish this. By putting a bias voltage on the oscillator grids which can be removed by pulsing the grid of a triode tied to this bias voltage, the oscillator will generate high voltage only at times of high plate voltage.

With these improvements made in due time by the physicists in charge the machine will operate with consistancy depending mainly upon the care and maintenance is receives. It is to be emphasized that the most important phase of unskilled operation of this machine is proper maintenance. Occasional neglect results in complete forgetfullness.

SPARE PARTS

(to be kept in stock at U C H)

QUANTITY	ITEM AND DESCRIPTION
2	Ion Gauge - Western Electric #D79510
4	Bias Supply - Rectifier Tube WE #3B24
1	Geissler Thyratron RCA #2050
	Diode RCA #6H6
1	Emission Control Thyratron RCA #2050
25 gals	Fore-vac oil - DTE Medium Heavy
5 gals	Diffusion pump oil - Litton
1	Diffusion pump heaters: Kromlock 230V 1KW
1	Kromlock 230V 1.25 KW
1	Kromlock 230V 1.8 KW
1	Peaking KV reading voltmeter rectifier tube RCA #2X2
3	Leach relay DTDT - #1357
12	Pilot lights Western Electric #34 lamp
12	Fuses: Little fuse 5 amp.
12	Little fuse 10 amp.
12	Little fuse 15 amp.
6	Link fuse 15 amp. - 4 KV
6	Link fuse 50 amp. - 4 KV

Spare Units in Operating Condition:

UCRL Ion Gauge Power Supply
Dumont #224 Oscilloscope
Victoreen Integron

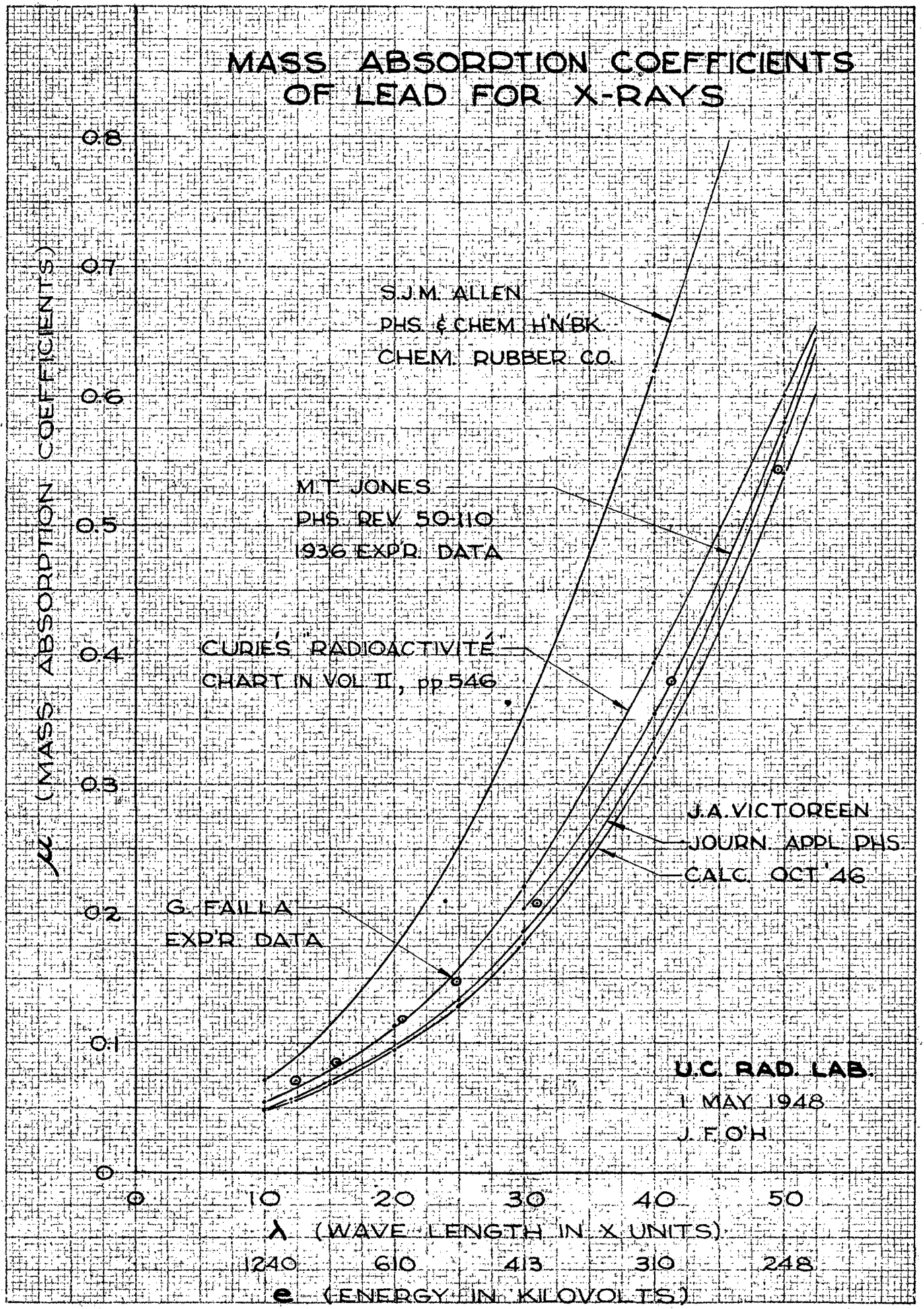
MASS ABSORPTION COEFFICIENTS
OF LEAD FOR X-RAYS
μ (MASS ABSORPTION COEFFICIENTS)
0.8
0.7
0.6
0.5
0.4
0.3
0.2
0.1
0
S.J.M. ALLEN
PHS. & CHEM. H'N'BK.
CHEM. RUBBER CO.
M.T. JONES
PHS. REV. 50-110
1936 EXP'R. DATA
CURIE'S "RADIOACTIVITÉ"
CHART IN VOL. II, pp 546
J.A. VICTOREEN
JOURN. APPL. PHS.
CALC. OCT '46
G. FAILLA
EXP'R. DATA
U.C. RAD. LAB.
1 MAY 1948
J. F. O'H.
0
10
20
30
40
50
λ (WAVE LENGTH IN X UNITS)
1240
610
413
310
248
e (ENERGY IN KILOVOLTS)

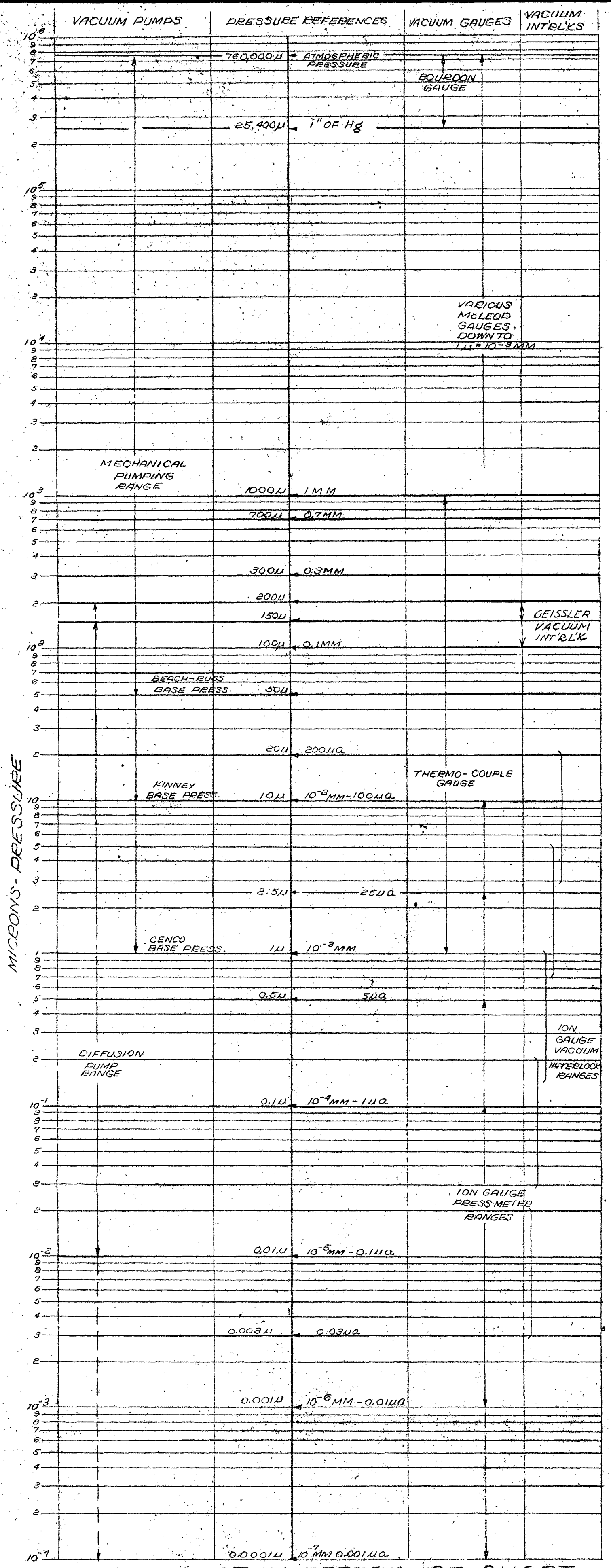

VACUUM SYSTEM REFERENCE CHART
DRG. NO. 2V8263

SHOWN ON									
ISSUED TO	DATE ISSUED	DELIVER TO	JOB NO.	DATE REQ'D	MAKE				

TOLERANCES WHERE NOT OTHERWISE GIVEN

RADIATION LABORATORY

DRG. NO. 2V7C31

UNIVERSITY OF CALIFORNIA—BERKELEY

DRAWN BY JWS	CHECK BY JFO'H	DATE 9-29-48
APPROVED BY [signature]	SCALE NONE	

SLOAN X-RAY VACUUM SYSTEM SCHEMATIC DIAGRAM

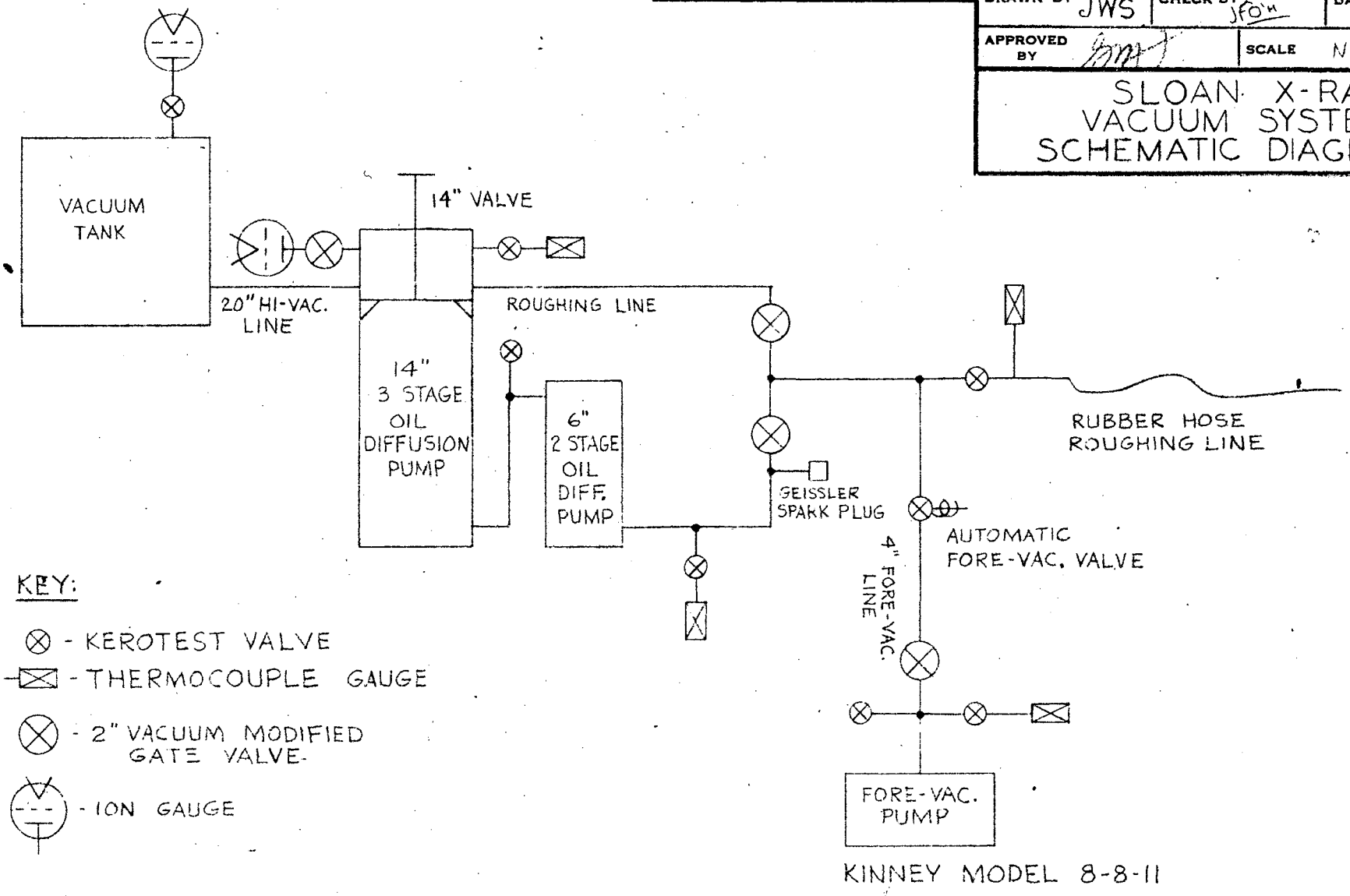

MATERIAL	CHANGE LETTER	DRAWN BY	CHECK BY	DATE	CHANGE

"ALBANENE" 195L K. & E. CO., N Y.
REG. U. S. PAT. OFF.

SHOWN ON									
ISSUED TO	DATE ISSUED	DELIVER TO	JOB NO.	DATE REQ'D	MAKE				

TOLERANCES WHERE NOT OTHERWISE GIVEN

RADIATION LABORATORY DRG. NO. 2V6-01

UNIVERSITY OF CALIFORNIA—BERKELEY

DRAWN BY JWS | CHECK BY JFOH | DATE 9-28-48

APPROVED BY | SCALE NONE

SLOAN X-RAY TREATED WATER SYSTEM SCHEMATIC DIAGRAM

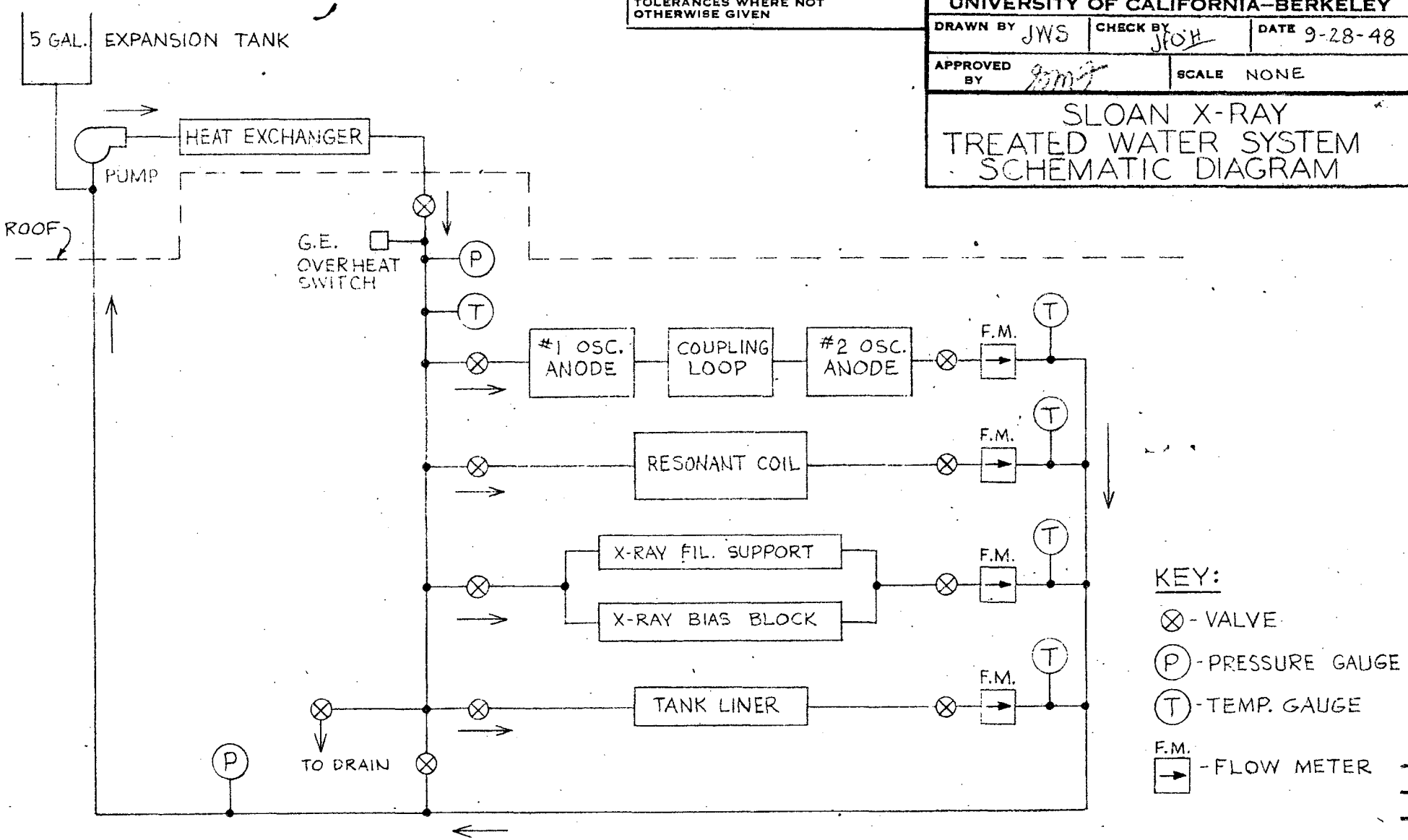

MATERIAL	CHANGE LETTER	DRAWN BY	CHECK BY	DATE	CHANGE

"ALBANENE" 195L K. & E. CO., N Y.
REG. U. S. PAT. OFF.

SHOWN ON									
ISSUED TO	DATE ISSUED	DELIVER TO	JOB NO.	DATE REQ'D	MAKE				
				TOLERANCES WHERE NOT OTHERWISE GIVEN					

RADIATION LABORATORY

DRG. NO. 2V6161

UNIVERSITY OF CALIFORNIA–BERKELEY

DRAWN BY JWS	CHECK BY JFOH	DATE 9-28-48
APPROVED BY	SCALE NONE	

SLOAN X-RAY CITY WATER SYSTEM SCHEMATIC DIAGRAM

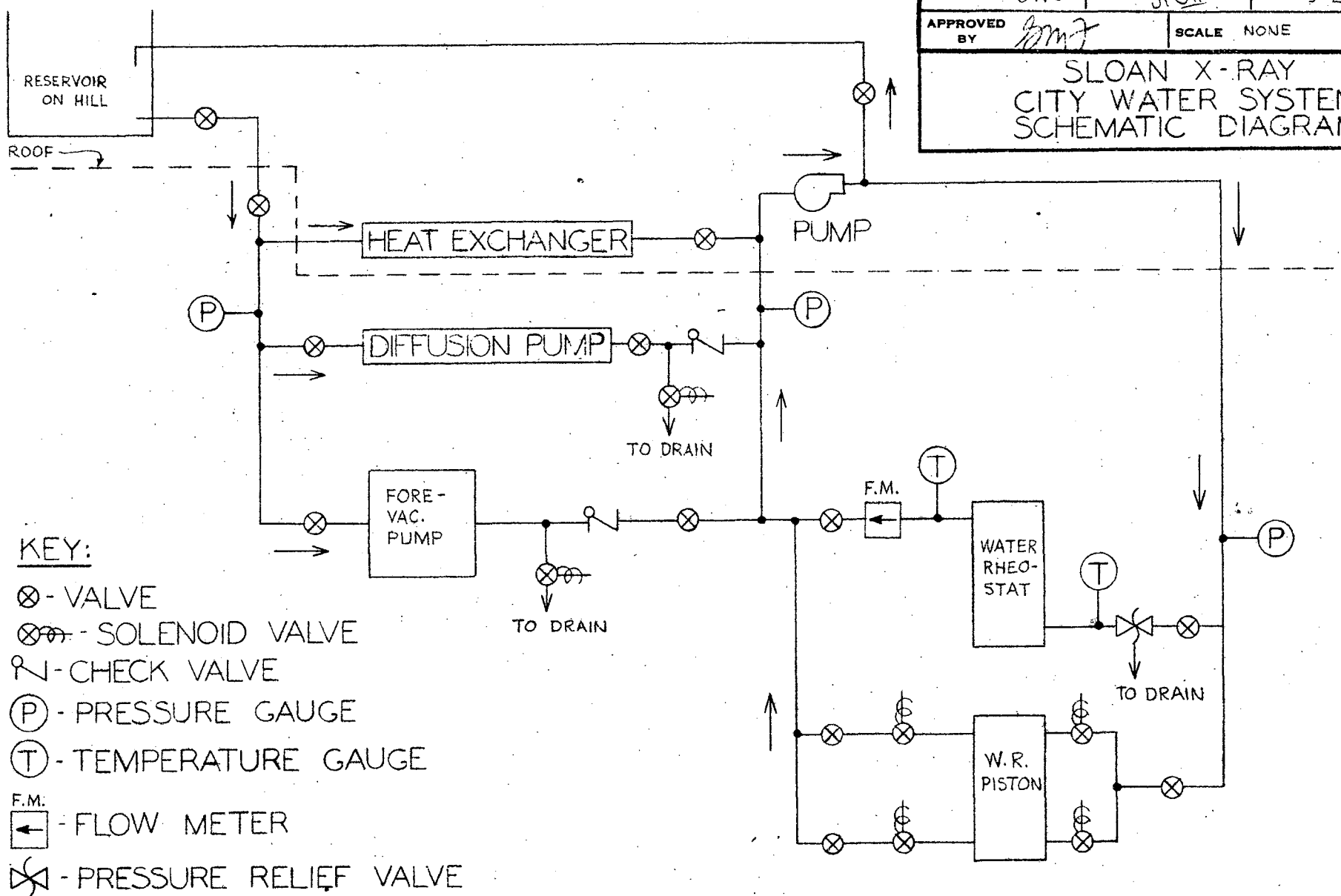

MATERIAL	CHANGE LETTER	DRAWN BY	CHECK BY	DATE	CHANGE

"ALBANENE" 195L K. & E. CO., N Y.
REG. U. S. PAT. OFF.

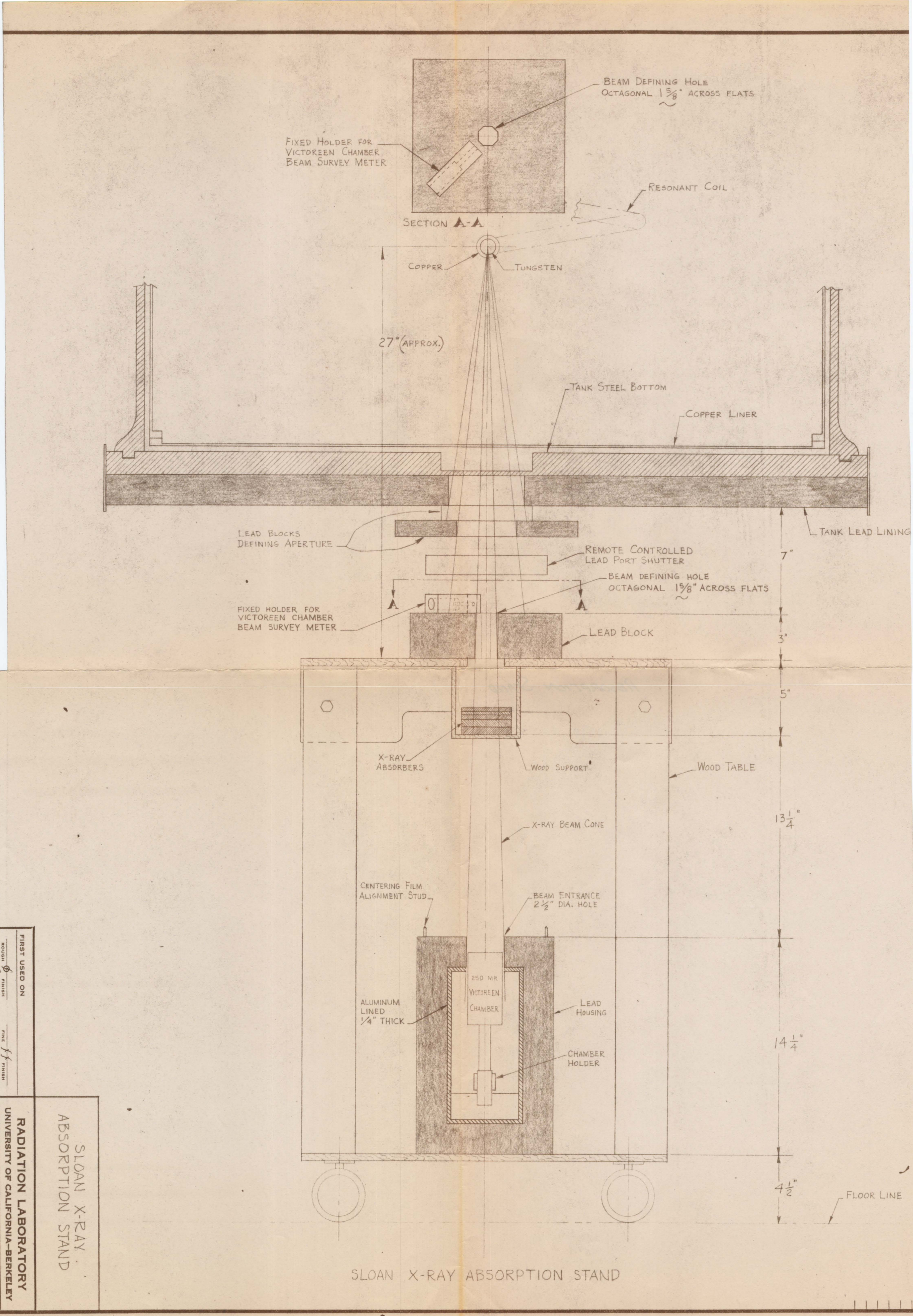

SLOAN X-RAY ABSORPTION STAND