UNIVERSITY OF CALIFORNIA — BERKELEY

[redacted]

UCRL-1884

DECLASSIFIED

TWO-WEEK LOAN COPY

This is a Library Circulating Copy which may be borrowed for two weeks. For a personal retention copy, call Tech. Info. Division, Ext. 5545

RADIATION LABORATORY

UCRL-1884 c.2

[redacted]

DISCLAIMER

This document was prepared as an account of work sponsored by the United States Government. While this document is believed to contain correct information, neither the United States Government nor any agency thereof, nor the Regents of the University of California, nor any of their employees, makes any warranty, express or implied, or assumes any legal responsibility for the accuracy, completeness, or usefulness of any information, apparatus, product, or process disclosed, or represents that its use would not infringe privately owned rights. Reference herein to any specific commercial product, process, or service by its trade name, trademark, manufacturer, or otherwise, does not necessarily constitute or imply its endorsement, recommendation, or favoring by the United States Government or any agency thereof, or the Regents of the University of California. The views and opinions of authors expressed herein do not necessarily state or reflect those of the United States Government or any agency thereof or the Regents of the University of California.

UNIVERSITY OF CALIFORNIA
Radiation Laboratory

Cover Sheet
Do not remove

INDEX NO. UCRL 1884
This document contains 39 pages
This is copy 3 of 3 series B

DECLASSIFIED Issued to Information Division

Classification

Each person who receives this document must sign the cover sheet in the space below.

Route to	Noted by	Date	Route to	Noted by	Date
	E J L.				
D Low	✓				
J Franck	✓				
Bob Smith					

I-5(M)

UCRL-1884
Technology-Materials Testing Accelerator

~~SECRET~~
~~SECURITY INFORMATION~~

UNIVERSITY OF CALIFORNIA

Radiation Laboratory

Contract No. W-7405-eng-48

DECLASSIFIED

THE CLOVERLEAF CYCLOTRON THREE PHASE RADIOFREQUENCY SYSTEM

Bob H. Smith

September 9, 1952

CLASSIFICATION CANCELLED
BY AUTHORITY OF THE DECLASSIFICATION BRANCH USAEC
BY B Forbett 3-15-57
SIGNATURE OF THE PERSON MAKING THE CHANGE — DATE

~~RESTRICTED DATA~~

~~This document contains restricted data as defined in the Atomic Energy Act of 1946. Its transmittal or disclosure of its contents in any manner to an unauthorized person is prohibited.~~

Berkeley, California

~~SECRET~~
~~SECURITY INFORMATION~~

Standard Distribution, Series A:	Copy no.
Atomic Energy Commission, Washington	1 - 4
California Research and Development Company	5 - 9
Carbide and Carbon Chemicals Company (ORNL)	10
Carbide and Carbon Chemicals Company (Y-12 Area)	11
Chicago Operations Office	12
Patent Branch, Washington	13
San Francisco Area Office	14 - 15
University of California Radiation Laboratory	16 - 20
Technical Information Service, Oak Ridge	21 - 35

DECLASSIFIED

SECRET

THE CLOVERLEAF CYCLOTRON THREE PHASE RADIOFREQUENCY SYSTEM

Bob H. Smith

Radiation Laboratory, Department of Physics
University of California, Berkeley, California

September 9, 1952

Introduction

The geometry of the magnetic pole structure in the cloverleaf cyclotron suggests the use of three dees excited by three phase rf placed in the valleys out of the way of the beam. Experience with the model machines indicates that it is desirable to be able to vary the phase angles between the three dee voltages through 30 or 40 degrees and to be able to maintain them at any given value within plus or minus one degree. It is desirable, also, to be able to vary the phase angle independently of the amplitude of the dee voltages.

There are several possible ways of meeting these requirements. The one which was chosen appears to be the most flexible and to best meet the problems presented by the center geometry of the machine.

A block diagram of the three phase rf system is shown in Fig. 1. The system may be described as follows. The crystal oscillator develops the rf signal and excites the phase generator. The latter generates the three phases and provides adjustment of the phase of the B and C vectors without changing their amplitude. Each phase voltage is amplified by the buffer and final amplifier and then applied to the dee.

The machine is maintained in perfect tune automatically by a system of servomechanisms. The particular arrangement which is used requires high

SECRET

loop gain only on the two dee phase servos and at the same time permits more dee-to-dee and plate-to-grid coupling than the more obvious connections. Briefly, the function of each servo is as follows.

The "A" amplifier efficiency servo measures the phase angle between the grid and plate voltages and adjusts this angle to 180 degrees by tuning "A" dee. Thus, amplifier "A" is maintained at maximum efficiency at all times.

The "A-B" dee phase servo measures the phase angle between the "A" and "B" dee voltages and tunes "B" dee until this angle is 120 degrees. The "A-B" grid phase servo measures the angle between the grid voltages of the two amplifiers and adjusts this angle to 120 degrees by means of the "B" phase control on the phase generator. It is evident that the phase angle between "B" grid and "B" plate is now the same as it is between "A" grid and "A" plate. Thus, if amplifier "A" is operating at maximum efficiency amplifier "B" must be also.

The "A-C" dee phase servo and the "A-C" grid phase servo work in exactly the same way as the "A-B" servos except that "A-C" is a leading angle whereas "A-B" is a lagging angle.

The Phase Generator

The purpose of the phase generator is to produce the three phase rf and to provide a means of changing the relative position of the three vectors without changing their amplitude. In order to accomplish the latter requirement with a minimum number of components, a special property of a 45 degree transmission line is employed. Such a line has the property that the magnitude but not the phase angle of its input impedance remains

constant as its load resistance is varied. This may be shown as follows: the input impedance of a lossless line is

$$Z_i = Z_o \left[\frac{Z_L \cos \beta \ell + j Z_o \sin \beta \ell}{Z_o \cos \beta \ell + j Z_L \sin \beta \ell} \right]$$

If $\beta \ell = 45^\circ$ $\cos 45^\circ = \sin 45^\circ = 0.707$

Let $Z_L = R_L + j0$

Then

$$Z_i = Z_o \left[\frac{R_L + j Z_o}{Z_o + j R_L} \right] = Z_o \, \varepsilon^{j(\delta - \gamma)}$$

where $\tan \delta = \frac{Z_o}{R_L}$

$\tan \gamma = \frac{R_L}{Z_o}$

now $\tan (A - B) = \frac{\tan A - \tan \beta}{1 + \tan A \tan B}$

$$\therefore \quad \delta - \gamma = \tan^{-1} \frac{1}{2} \left(\frac{Z_o}{R_L} - \frac{R_L}{Z_o} \right)$$

so

$$Z_i = Z_o \, e^{j\theta} \qquad \text{where } \theta = \tan^{-1} \frac{1}{2} \left(\frac{Z_o}{R_L} - \frac{R_L}{Z_o} \right)$$

Where R_L is zero, the input impedance is equal to Z_o and inductive. As R_L is increased, the magnitude remains Z_o but the phase angle becomes progressively smaller until R_L is equal to Z_o. As R_L is further increased the magnitude still remains Z_o but the phase angle changes sign and becomes progressively larger until, at R_L equal to infinity, it becomes 90 degrees capactive.

Figure 2 shows the basic circuit of the phase generator.

Consider channel B in Fig. 2. A constant 60 degree leading current is produced by the resistance capacitance combination in the grid circuit.

The voltage produced by this current flowing through the input impedance of the 45 degree transmission line is applied to the grid of the tube. Since the magnitude of the input impedance of the line is independent of the load resistance of the line and the current is constant, the magnitude of the voltage applied to the grid is constant. The phase of this voltage can be shifted ahead or behind the current by changing R_L. When R_L is set equal to Z_o, the phase of the voltage applied to the grid leads A by 60 degrees. Since there is a phase shift of 180 degrees through the tube, the output voltage of channel B lags A by 120 degrees. Channel C performs in the same manner except that the initial current lags by 60 degrees and so the output voltage leads phase A by 120 degrees.

In actual operation the load resistors, R_L, are driven by servo motors. Of course, if one wanted an entirely electronic system R_L might be the plate resistance of a vacuum tube transformed to a suitable value by means of a tuned circuit. Then the phase could be shifted by varying the bias on this tube.

Phase Drift in Rf Amplifiers

The plate circuit of a typical rf amplifier can be reduced by means of Thevenins theorem to the circiut of Fig. 3. The relation between the input and output voltages and the parameters of the circuit is:

$$\frac{e_o}{e_i} = \frac{1}{1 - j\,Q\left[1 - \left(\frac{f}{f_o}\right)^2\right]} \qquad (1)$$

The phase shift through the circuit is:

$$\tan\theta = Q\left[1 - \left(\frac{f}{f_o}\right)^2\right] \qquad (2)$$

Suppose we assume that the change in phase of the output voltage is caused by a drift in the resonant frequency of the tuned circuit. We can find how the phase changes as f_o drifts by differentiating Eq. (2):

$$\Delta\theta = \frac{2\,Q\,f^2\,d\,f_o}{f_o^3\,\sec^2\theta} = \frac{2\,Q\,f^2\,\Delta f_o}{f_o^3\left\{1 + Q^2\left[1 - \left(\frac{f}{f_o}\right)^2\right]\right.} \tag{3}$$

It is evident that the greatest phase change occurs for $f = f_o$ so the maximum phase drift is

$$\Delta\theta_{max} = 2\,Q\,\frac{\Delta f_o}{f_o} \tag{4}$$

The drift in a tuned circuit is less then 100 parts per million. The maximum Q which we can tolerate for 0.1 degree drift is

$$Q_{max} = \frac{1 \times 10^4}{573 \times 2} = 8.7$$

Thus, if the loaded Q of the tuned circuit is made about 10 the phase drift in the electronic circuit will be about 0.1 degrees per stage of amplification. In a well designed system the drift in the electronic equipment is small and the servo equipment is used only to compensate for the thermal changes in the dee structure itself.

Measurement of Phase Angle

The phase information of the dees and final amplifier grids is obtained by means of loops and is transmitted to the phase measurement equipment by means of unterminated transmission lines. Lossless lines have the property that the phase shift along the line is either zero or π. The

phase shift due to cable loss is most severe for a line whose lengths is near an odd multiple of a quarter wave length. It is advantageous therefore to make all cables an even multiple of a quarter wavelength.

Upon reaching the phase measurement rack the signals are converted to a convenient audio frequency (15 kc has been chosen as standard) where stray capacitance has negligible effect. This is accomplished by means of a heterodyne frequency converter which has the property that the amplitude of the audio output signal is independent of the amplitude of the rf input. In addition, the frequency converter contains an anti-noise circuit which supresses arc noise and power supply ripple which might be carried by the rf.

The output signal of the frequency converter is amplified and applied to the phase meter. The audio signal is monitored by oscilloscopes which provide a check on phase and the quality of the audio signal by means of Lissajou figures. An electronic switch circuit and associated oscilloscope has been developed so that three Lissajou figures can be presented on one screen.

The output voltage of the phase meter is sent to the servo control amplifier which operates the dee stem tuning motors. Let us now consider each component of the system.

The Frequency Converter

Figure 4 shows a simplified diagram of the frequency converter.

The values of the parts shows are typical. Any number of channels may be used. The local oscillator frequency is 15 kc less than that of the rf input and its amplitude is made small compared to that of the rf so that distortion will not be present in the audio output signal.

Consider the vector diagram of Fig. 5. The voltage applied to diode 1, e_{D1}, is the vector sum of the rf input, e_a, and the local oscillator voltage, e_o. The angular velocity of the oscillator vector differs from that of the rf input by the amount corresponding to the difference frequency of the two vectors. Thus, the amplitude of e_{D1} oscillates at the audio rate between e_a plus e_o and e_a minus e_o. The diode rectifies this wave and produces a d.c. component equal to the magnitude of the rf voltage and a 15 kc. audio component having the same amplitude as the local oscillator signal. It is apparent from Fig. 5 that the crest of the audio cycle occurs at the instant for which e_o is in phase with e_a. Since e_o is rotating with respect to e_a at an audio rate it is evident that the number of degrees between the audio crests of the A and B channels is the same as the number of degrees between the rf vectors e_a and e_b. Hence, the frequency converter preserves phase.

Unfortunately, the problem is somewhat complicated by the fact that the rf signal contains arc noise and rectifier ripple. Since these occur on the rf as amplitude modulation they appear in the diode load circuit along with the d.c. and 15 kc. audio components. Figure 6 shows a method of suppressing this noise. A second diode is added to each channel with identical circuitry as the signal diode except that the local oscillator signal is absent. Thus the output of this circuit contains exactly the same noise component as the signal channel but does not contain the 15 kc audio. The two signals are applied to the grids of a difference amplifier which subtracts the noise and leaves only the 15 kc. signal. The output signal of the frequency converter is amplified by a conventional audio amplifier, in which care has been taken to minimize phase shift, and is applied to the phase detector.

The Phase Detector

A simplified diagram of the phase detector is shown in Fig. 7a. In Fig. 7b, C is the midpoint of bf AB. The d.c. output voltage of V_1 is $E_A/2$ and of V_2, E_R. It is evident from Fig. 7b that if E_A and E_B are of equal magnitude and differ in phase by 120 degrees that angle OAC will be 30 degrees and that E_R will be half of E_A. If E_A and E_B differ in phase by more than 120 degrees E_R will be less than half of E_A and if they differ in phase by less than 120 degrees E_R will be greater than half of E_A. Thus, if the phase angle is greater than 120 degrees ΔE_R is negative, equal to 120 degrees ΔE_R is zero, and less than 120 degrees ΔE_R is positive. In general, if one solves the vector diagram of Fig. 7b he obtains:

$$\Delta E_R = \sqrt{(1 - \Delta E) \sin^2 \frac{1}{2} (60 - \theta) + \frac{1}{4} \overline{\Delta E}^2} - \frac{1}{2} \qquad (5)$$

ΔE is normally made equal to zero by adjusting the gain controls on the audio amplifiers and the ΔE_R meter can be calibrated to read directly in degrees by means of Eq. (5).

The two voltmeters in Fig. 7a are of the differential vacuum tube voltmeter type. It has been found advantageous to regulate the filament voltages of the diodes V_1, V_2, and V_3, by means of a sola filament transformer to minimize drift in their contact potential, which is the greatest source of drift in the circuit. With this precaution, and an audio signal level of 6 volts peak, the long time drift seems to be about one degree. Increasing the audio signal level to 100 volts should reduce this drift to less than 0.1 degrees.

Figure 8 shows a simplified circuit of the phase meter and differential voltmeter with output connection for signal to the servo control amplifier.

R_ϕ controls the phase angle for which the servo system nulls. In the center it holds at 120 degrees.

The Servo Control Amplifier

The servo control amplifier is a perfectly conventional motor controller as shown in Fig. 9. It consists of a Brown converter which converts the d.c. signal to a 60 cycle square wave. This is amplified by a standard resistance coupled amplifier with a gain of approximately 750 and applied to the grids of the grid controlled rectifiers. If there is no signal applied to the amplifier, the rectifier, being full wave, produces no 60 cycle component and the motor does not run. In this condition the d.c. component of the rectifier output serves as a brake, which incidently, increases the stability of the servo considerably. If the input signal to the control amplifier is positive the square wave produced reduces the output current of one of the rectifier tubes and increases the output of the other. This provides a 60 cycle component and reduces the d.c. component of the rectifier output, causing the motor to turn. If the input to the servo control amplifier is negative, the phase of the square wave produced by the converter is inverted, and the phase of the 60 cycle component in the rectifier output is inverted and the motor turns in the opposite direction.

It is evident that the servo system is of the non-linear type. The system is velocity limited for signals far from the null point, inertia controlled near the null point, finally coming into the null point tangentially as the d.c. braking component takes effect.

The Tuning Mechanism

The servo motors drive tuning capacitors by means of a gear train. It is essential to stability in the servo system that the compliance in the drive system be kept to a minimum so that the system is mass controlled up to a sufficiently high frequency to prevent hunting. (About 10 cps) It is desirable to keep the inertia of the mechanical system to a minimum in order that the speed of response may be a maximum.

The capacitors used on the 20 inch machine were sufficient to produce a change in the resonant frequency of the resonator of 2 percent. This is quite adequate to take care of the worst temperature changes which occur on this machine. It is necessary to keep the capacitor lead inductance to a minimum and to be sure that the tuning capacitor does not introduce anti-resonant modes, as seen by the amplifier, at any of the harmonics. Actually one only has to be very careful for the second, third, and fourth harmonics since the amplifier tank circuit can be made to effectively suppress the higher harmonics.

The tuning capacitors must be designed to withstand sparking. When a spark occurs at the dee a high voltage transient travels down the dee stem and sparks across the relatively small gap between the capacitor plates. Ball gaps were used to protect the capacitor plates, but, while they help, they are not sufficient to completely prevent discharges at the plates.

The Characteristics of the Resonator

The dee stems are foreshortened, shorted transmission lines loaded by the dee to ground, and dee-to-dee capacitances. Over the narrow frequency range which the machine tunes, one may consider the stem as a lumped inductance and the dee loads as capacitances without serious error. In

addition of course, the skin losses and beam power may be represented by resistances. Assuming the validity of these assumptions the equivalent circuit of the resonator is shown in Fig. 10.

Physically, the dee-to-dee capacitances are concentrated near the tips of the dees. Since the source is placed between two of the dee tips and the capacitance between these dees is appreciably lower than the others. This has serious consequences as one can see from the vector diagram of Fig. 11.

I_{ab} is drawn 90 degrees ahead of V_{ab} and I_{ac} is drawn 90 degrees ahead of V_{ac}. If I_{ab} does not have the same magnitude as I_{ac} the sum of these two currents will have a component in phase with V_a and thus will modify the apparent Q of A stem. While the dee-to-dee currents are small compared with the dee to ground currents, the inphase component of these currents can be very large compared with the inphase component of dee-to-ground current as a result of the high resonator Q.

As an example, consider a system for which the resonator Q is 5,000 and for which one dee-to-dee current is two percent of the dee-to-ground current and the other dee-to-dee current is one percent of the dee to ground current. Then the inphase component of the sum of the dee-to-dee currents will be 0.5 percent of the dee-to-ground current. However, the inphase component is only 0.02 percent of the dee-to-ground current. Hence, the apparent Q of the "A" stem resonator will be reduced to 4 percent of its original value and amplifier "A" will be intolerably overloaded.

Physically, this means that if the dee-to-dee capacitances are not balanced, power will flow from one dee to the other. It is entirely possible for amplifier "A" to deliver more power to one of the other dees than

to its own. This condition can cause quite a neurosis in the servo control system. The "B" dee servo system might detect a phase error for example, but if B amplifier is delivering its power to "C" dee then the servo, in attempting to correct the error, might cause more change in the phase of "C" dee than it does in "B". Hence the "C" dee servo system operates and disturbs "A" or "B". The process continues until the protective equipment turns off the power. Of course, all of this merely means that we must reduce the dee-to-dee coupling. This can be done by means of the neutralizing lines which will be discussed in the next section.

At first one might think that the way to eliminate the above difficulty might be merely to use adjustable dee-to-dee capacitors so that they can all be made equal. It is true that then there would be no power flow from dee-to-dee when the phase angles were 120 degrees and the dee voltages exactly equal. However, if one of the vectors were displaced a few degrees there would be power flow and the system would hunt. The answer to the problem is to neutralize the dee-to-dee capacitances.

The Theory of Neutralization

The simplest way to provide neutralization is connect inductances across the dee-to-dee capacitances making the circuit anti-resonant at the operating frequency. Then there can be no power flow from dee-to-dee and the machine is neutralized. This was done in the case of the 36-inch electron model and it worked very satisfactorily. However, in large machines the Q of the resonators are very high and it is difficult to build inductances to connect from dee-to-dee with sufficient Q to prevent power transfer. Probably the problems of holding voltage across such an inductance would be prohibitive also.

The method which was used on the 20 inch machine and which would be used on any high voltage machine makes use of neutralizing transmission lines connected from dee stem to dee stem. It must be emphasized that this is not equivalent to connecting inductances from dee-to-dee in two respects. It changes the resonant frequency of the resonator while the inductance method does not and almost perfect neutralization is possible with ordinary transmission line losses, whereas it is not with ordinary inductance losses.

The neutralizing lines may excite the dee stems by means of loops coupling the magnetic component of the field in the stem although the analysis here will assume a direct connection. The two methods are equivalent. In using loops it is necessary to keep the sense the same at both ends. Also, two lines and hence two loops are coupled to each dee stem. Care must be taken to keep the leakage flux to a minumum and to prevent leakage flux from coupling the two adjacent neutralizing lines together. This is accomplished by placing the neutralizing loops close to the center conductor in the stem keeping the number of turns to a minimum, and preferably placing the loops on opposite sides of the center conductor.

The position of the loops and hence the coupling can be varied by means of drive motors remotely controlled from the operating console. The lines and loops should be solidly built so that vibration will not vary the coupling and modulate the apparent dee-to-dee capacitance. In practice, this is not a serious problem.

One can build the three phase system by the superposition of three single phase systems. Thus, if we can determine the conditions necessary to neutralize the dee-to-dee capacitance between two dees we can obtain the neutralized three phase resonator by superposition.

Consider the circuit of Fig. 12 which represents two dee stems and the dee-to-dee capacitance. Suppose that only one of the two stems is excited as indicated by V_a. We seek the value of V_n which will cause V_L to be zero, i.e. we wish the excitation of "A" to produce no voltage on the other dee.

If V_L is zero then

$$I = j\, V_a\, \omega\, C_{DD} \tag{6}$$

Treating the section ℓ_1 of B stem as a transmission line, one finds that the boundary conditions at the load are:

$$V_L = 0$$
$$I_L = -\, j\, V_a\, \omega\, C_{DD} \tag{7}$$

Applying the general transmission line equations which are:

$$V_s = V_L \cos \beta \ell + j\, I_L\, Z_o \sin \beta \ell$$
$$I_s = I_L \cos \beta \ell + j\, \frac{V_L}{Z_o} \sin \beta \ell$$

one obtains:

$$V_n = V_a\, \omega\, C_{DD}\, Z_o \sin \beta \ell_1 \tag{8}$$

and

$$I_n = \frac{V_n}{j\, Z_o \tan \beta \ell_2} + \frac{V_n}{j\, Z_o \tan \beta \ell_1} = -\, j \frac{V_n}{Z_o} \left(\frac{1}{\tan \beta \ell_1} + \frac{1}{\tan \beta \ell_2} \right) \tag{9}$$

The required neutralizing voltage can be obtained by running a transmission line to A stem as shown in Fig. 13. By applying the transmission line equations to line 3 using V_n and I_n as the load voltage and current respectively we have:

$$V_x = V_n \cos \beta \ell_3 + j\, Z_o\, i_n \sin \beta \ell_3$$

$$i_x = i_n \cos \beta \ell_3 + j \frac{V_n}{Z_o} \sin \beta \ell_3$$

Again applying the transmission line equations to line one of "A" stem and using V_x and $\left(i_x \text{ plus } \frac{V_x}{j\, Z_o \tan \beta \ell_2}\right)$ as the load voltage and current we have

$$V_a = V_x \cos \beta \ell_1 + j\, Z_o \left(i_x + \frac{V_x}{j\, Z_o \tan \beta \ell_2}\right) \sin \beta \ell_1 \tag{10}$$

now:

$$j\, Z_o \left(i_x + \frac{V_x}{j\, Z_o \tan \beta \ell_2}\right) = V_n \left(\frac{1}{\tan \beta \ell_1} + \frac{1}{\tan \beta \ell_2}\right) \cos \beta \ell_3 -$$

$$V_n \sin \beta \ell_3 + \frac{V_n \cos \beta \ell_3}{\tan \beta \ell_2} \left[1 + \tan \beta \ell_3 \left(\frac{1}{\tan \beta \ell_1} + \frac{1}{\tan \beta \ell_2}\right)\right] \tag{11}$$

substituting this into (10) we get:

$$V_a = V_n \cos \beta \ell_1 \cos \beta \ell_3 \left[1 + \tan \beta \ell_3 \left(\frac{1}{\tan \beta \ell_1} + \frac{1}{\tan \beta \ell_2}\right)\right] +$$

$$V_n \cos \beta \ell_3 \sin \beta \ell_1 \left\{\tan \beta \ell_3 \left[-1 + \right.\right.$$

$$\left.\left. \frac{1}{\tan \beta \ell_2} \left(\frac{1}{\tan \beta \ell_1} + \frac{1}{\tan \beta \ell_2}\right) + \frac{1}{\tan \beta \ell_1} + \frac{2}{\tan \beta \ell_2}\right]\right\} \tag{12}$$

Upon substituting the expression for V_n (Eq. 8) we have:

$$\frac{2}{\omega\, C_{DD}\, Z_o} = \sin 2 \beta \ell_1 \cos \beta \ell_3 \left[2 + \tan \beta \ell_3 \left(\frac{1}{\tan \beta \ell_1} + \frac{2}{\tan \beta \ell_2} - \right.\right.$$

$$\left.\left. \tan \beta \ell_1\right) + \frac{\tan \beta \ell_1}{\tan \beta \ell_2} \left(\frac{1}{\tan \beta \ell_2} + 2\right)\right. \tag{13}$$

solving for $\cot \beta \ell_2$ we get the design equation for the neutralizing lines:

$$\cot \beta \ell_2 = -B + \sqrt{B^2 - C} \tag{14}$$

where:

$$B = 1 + \frac{\tan \beta \ell_3}{\tan \beta \ell_1}$$

$$C = 2 + \tan \beta \ell_3 \left(\frac{1}{\tan \beta \ell_1} - \tan \beta \ell_1 \right) = \frac{2}{\omega C_{DD} Z_o \sin^2 \beta \ell_1 \cos \beta \ell_3}$$

The procedure in designing a set of neutralizing lines is to select ℓ_1 and ℓ_3 to best meet the structural requirements of the machine. Then B and C can be computed and Eq. 14 solved for ℓ_2.

The previous analysis does not take perturbations such as the stem tuning capacitors into account and so it is best to model the resonator, after it is once designed, using ordinary coax (RG 8/U) for the dee stems and neutralizing lines, mica capacitors to represent the dee-to-ground and dee-to-dee capacitances, and mica trimmers to represent the dee stem tuning capacitors. The voltages and currents on the various lines can be obtained either from the model or by ordinary transmission line calculations.

The performance of the neutralizing lines is indicated by the neutralizing coefficients which are defined as follows:

$$N_{ij} = \frac{e_j}{e_i}$$

where e_j is the voltage appearing on j dee when only i dee is excited to a voltage e_i. It is assumed that e_j is tuned to a maximum at the time of the measurement. As an example of the magnitude of these coefficients for an actual machine, the coefficients for the 20 inch proton machine normally were below 3 percent. The rf model of the 20 inch had coefficients between 7 and 10 percent. The latter can be expected to have higher coefficients than the actual machine because the lines in such a model are not as lossless as the ones in an actual machine.

The procedure for adjusting the neutralizing lines on the 20 inch machine consists of measuring the neutralization coefficients and adjusting them to a minimum by means of the coupling adjustments on the neutralizing lines. It is necessary to let the machine down to air in order to avoid difficulties with ion lock during this adjustment. This latter requirement might be avoided by exciting all dees simultaneously and modulating one of them with a suitable low audio frequency. The neutralizing line coupling loops could then be adjusted until no modulation components appeared on the other two dees.

Control Equipment Needed on a Large Machine

In addition to the phase and efficiency servo equipment described in this report, there are several other pieces of equipment which our experience indicates would be desirable on a large machine.

First, one needs a method of adjusting the neutralizing loops without letting the machine down to air. A method was suggested in the section of the report on the theory of neutralization.

Secondly, a device which would tune the dees to resonance before the final amplifiers are turned on would be desirable. In order to break through ion lock it is necessary to have the dees in proper tune before the main rf is applied. One way of accomplishing this would be to excite the dees to a few volts and insert amplifiers in the servo system input signal lines. The servo equipment would then tune the dees automatically just as it normaly does at high power.

Thirdly, equipment to protect the final amplifiers against loss of load is needed. For example, suppose the machine were operating with

a heavy beam load and a spark occured. The rf - d.c. interlock would remove the dee excitation for a few seconds while the spark is extinguished and the vapors removed. When the excitation is applied again there might be very little beam due to a slight thermal change in tuning. With almost no load on the final amplifiers the screen current might be sufficiently high to damage the tube before the beam was brought back to normal. A device which would sample the screen current and prevent overload by reducing either grid drive or screen voltage is needed.

Fourthly, a signal which will de-energize the servo equipment whenever dee excitation is removed and which will energize the equipment again a few seconds after the excitation returns is needed. This device can be part of the rf - d.c. interlock. On the 20 inch machine it consisted of a thyratron time delay controllable from one to twenty seconds. It was usually set at three seconds.

Conclusion

Figure 14 is a complete schematic of a typical servo control system for a three phase cyclotron. It contains two phase servos and one efficiency servo. Control equipment of this type has proven to have high dependability. The equipment used on the 20 inch machine, for example, has had more than 900 hours of operation with negligible maintenance. The reason for the high dependability is that the low amount of power involved in such equipment makes possible large safety factors. Figures 15 - 19 show various views of the equipment used on the 20-inch cyclotron.

The rf system described in this report is quite simple in concept. Once the neutralizing loops are adjusted the machine behaves like three

separate single phase systems. In high power installations, where adequate safety factors are difficult to achieve, the reduction of the rf equipment into three small independant units is indeed a convenient property of this type of three phase system.

Information Division
9/10/52 bw

DECLASSIFIED

SECRET

ACKNOWLEDGMENT

The rf system described in this paper was developed from a basic design of Dr. K. R. MacKenzie. Other contributors were Minard Leavitt, Melvin Chun, Warren Dexter, and George Farley,

SECRET

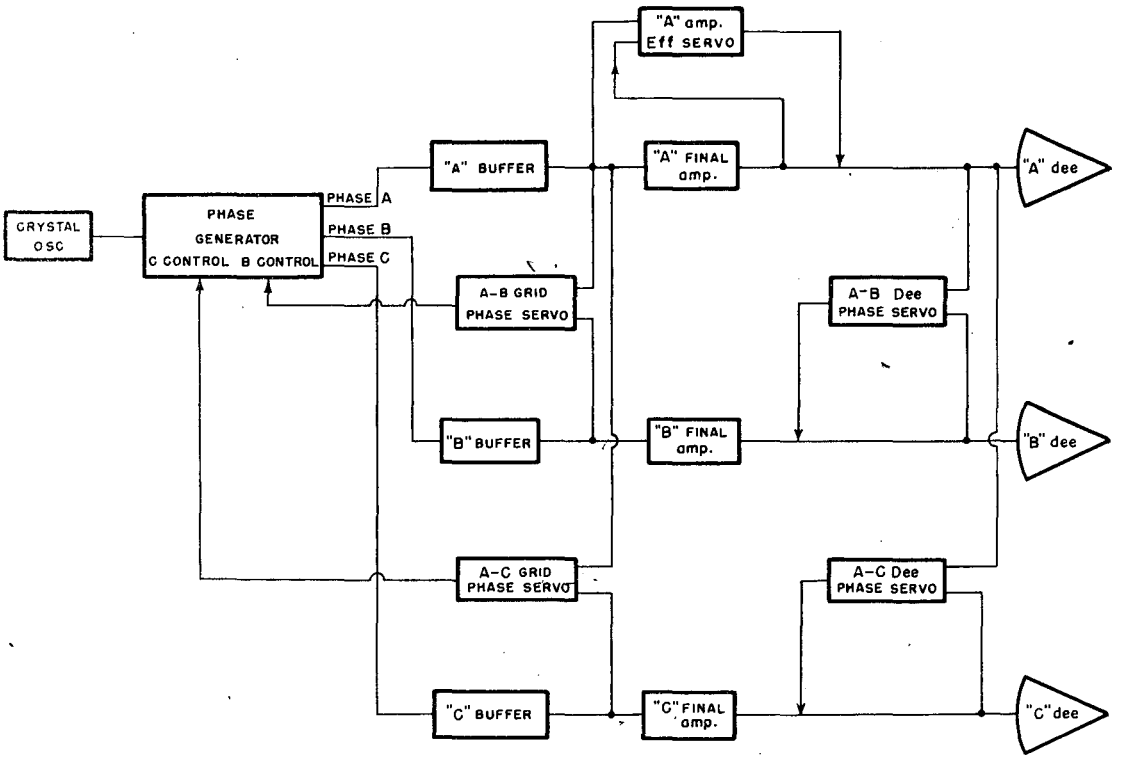

FIGURE 1

MU-4453

Block diagram of the three phase rf system.

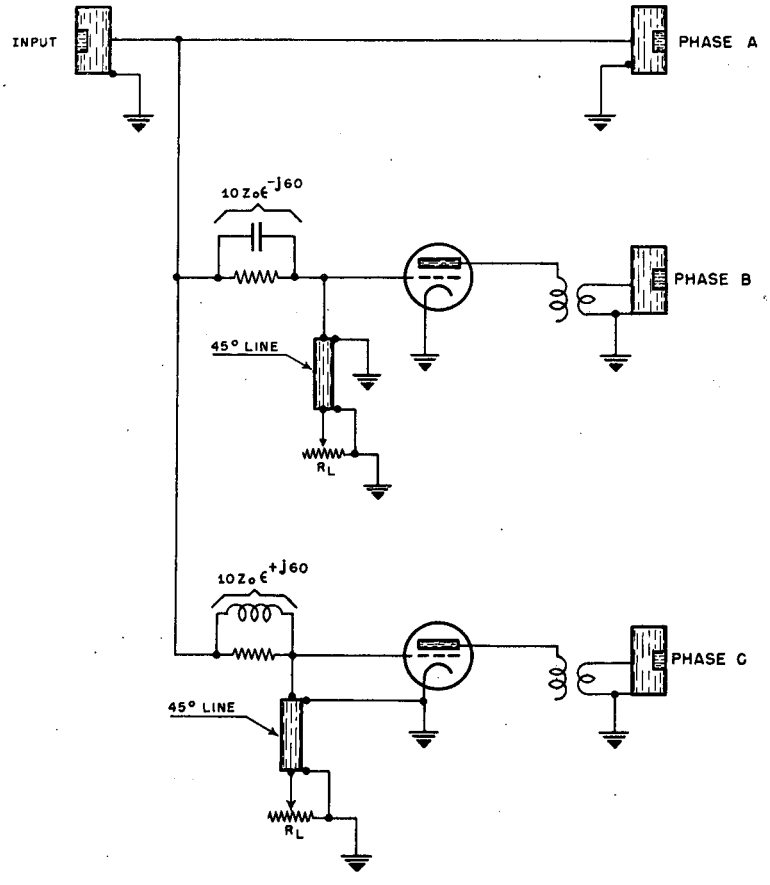

FIGURE 2

MU-4454

The basic circuit of the phase generator.

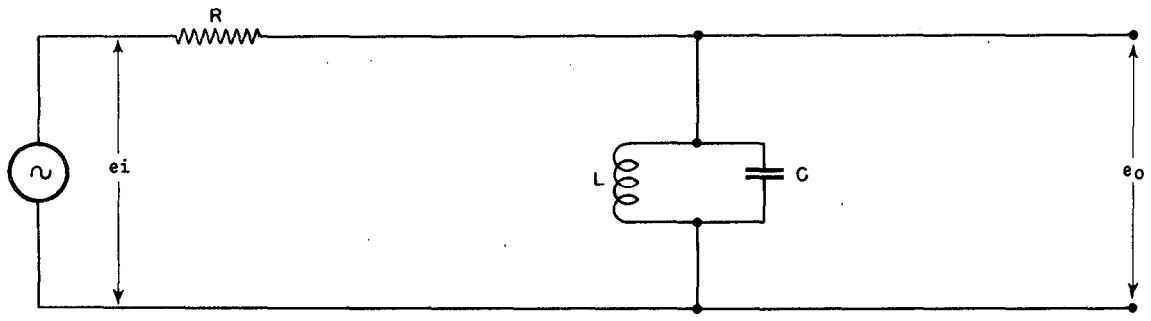

FIGURE 3

MU-4455

The equivalent circuit of an rf amplifier.

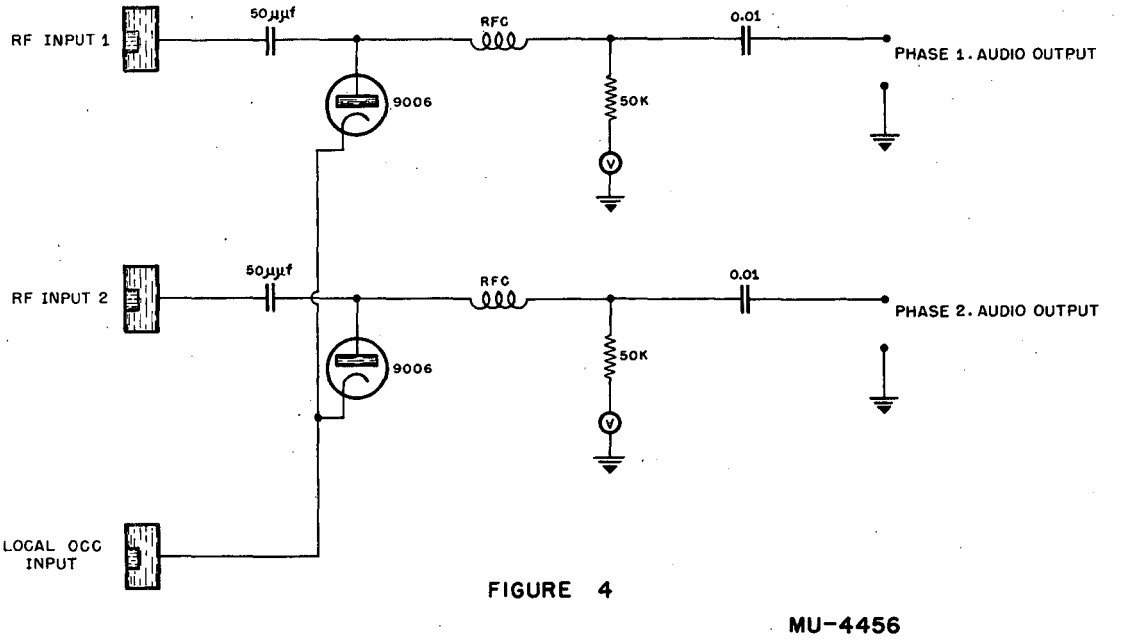

The basic circuit of the frequency converter.

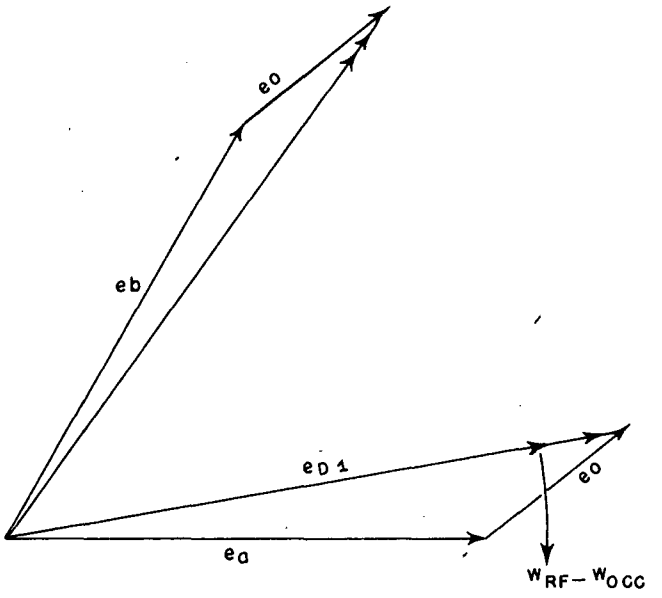

FIGURE 5

MU-4457

The vector diagram of the frequency converter.

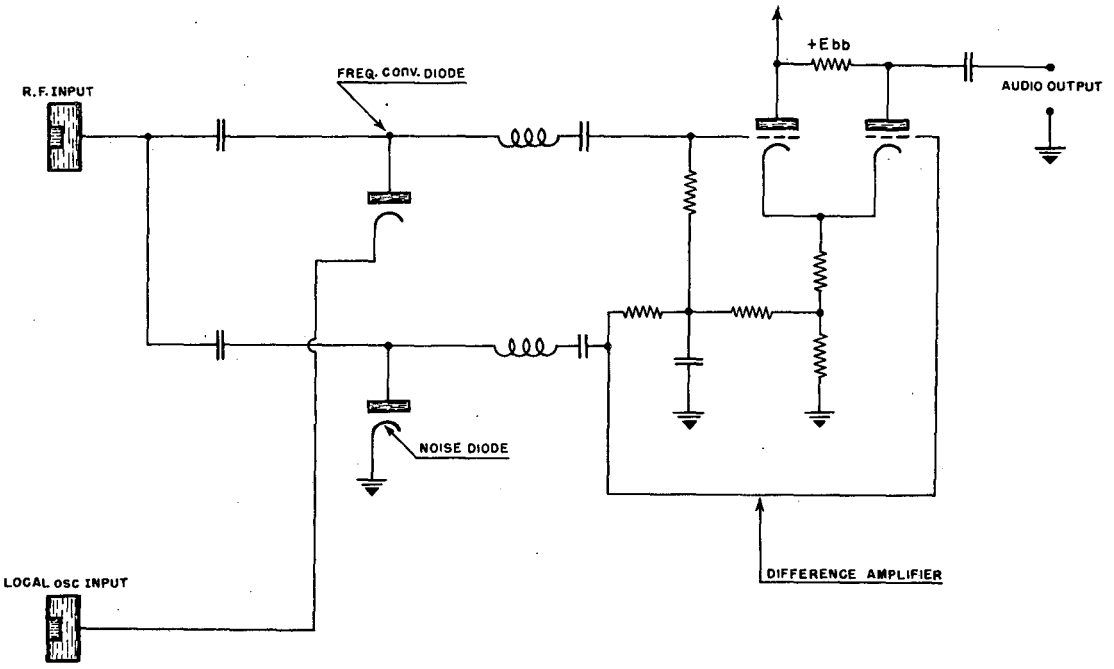

FIGURE 6

MU-4458

The frequency converter and noise suppressor.

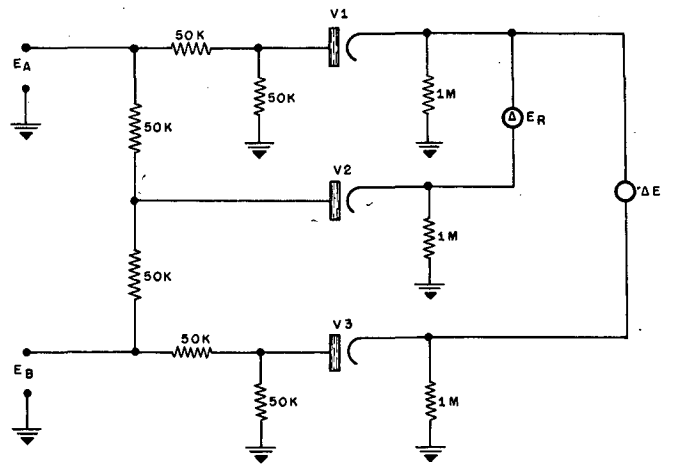

20193

FIGURE 7A

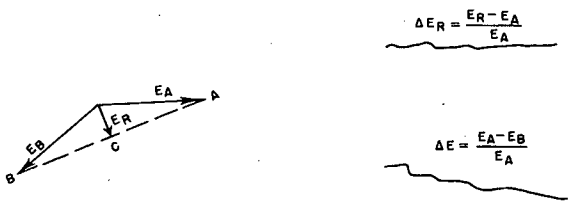

FIGURE 7B

MU-4459

Fig. 7a

The basic circuit of the phase meter.

Fig. 7b

The vector diagram of the phase meter.

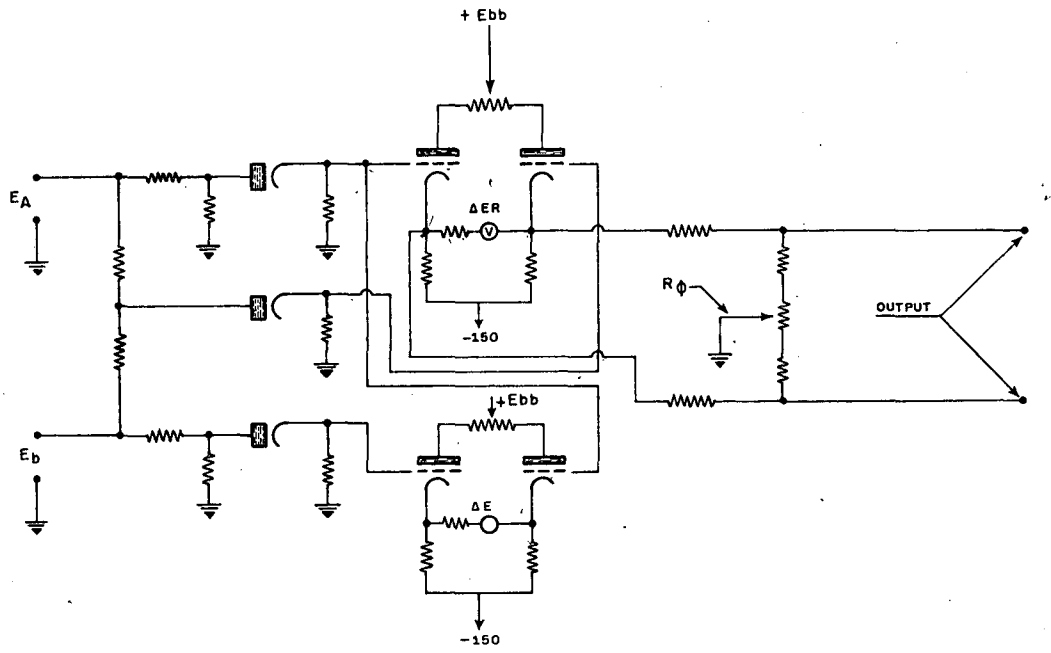

FIGURE 8 MU-4460

The basic circuit of the phase meter and associated metering equipment.

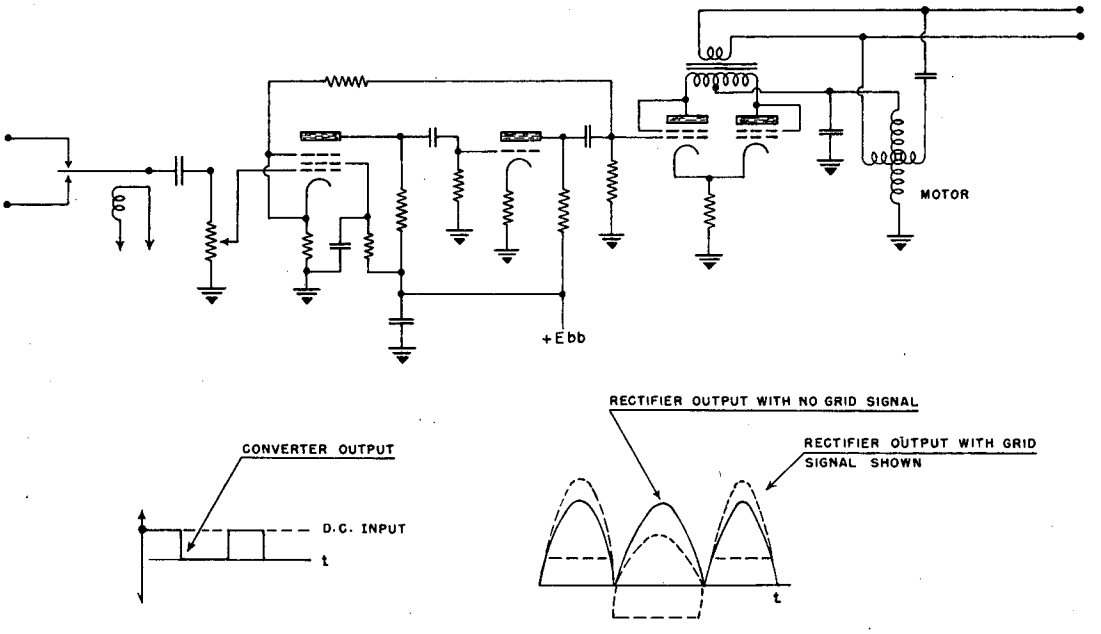

FIGURE 9

MU-4461

The basic circuit of the servo control amplifier.

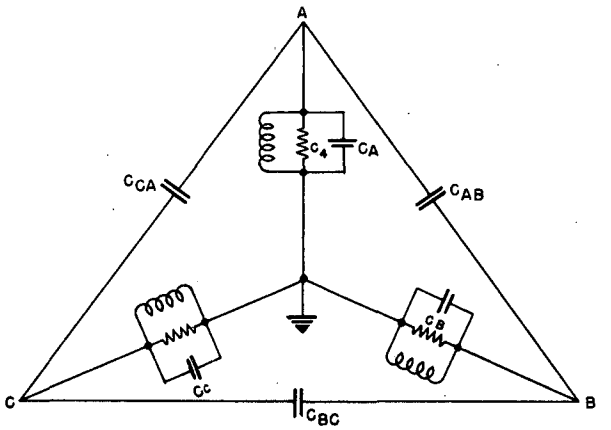

FIGURE 10

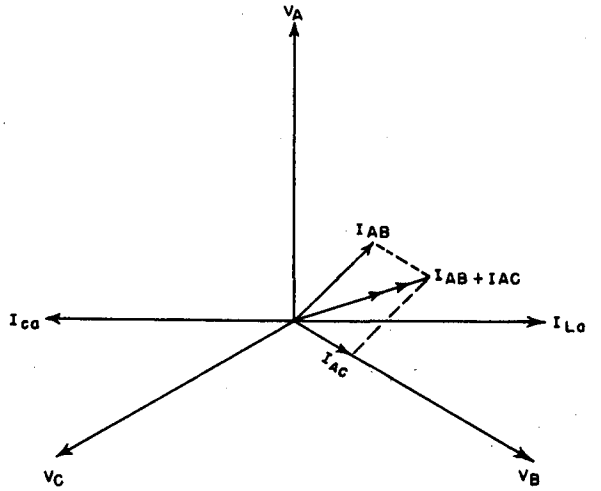

FIGURE 11

MU-4462

Fig. 10

The equivalent circuit of the three phase resonator.

Fig . 11

The vector diagram of the three phase resonator.

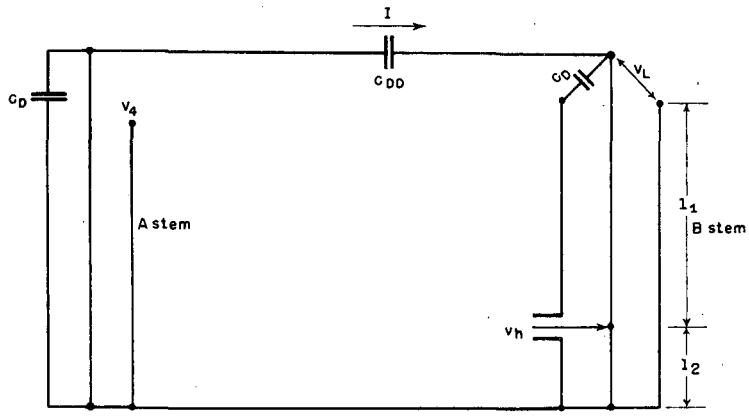

FIGURE 12

20199

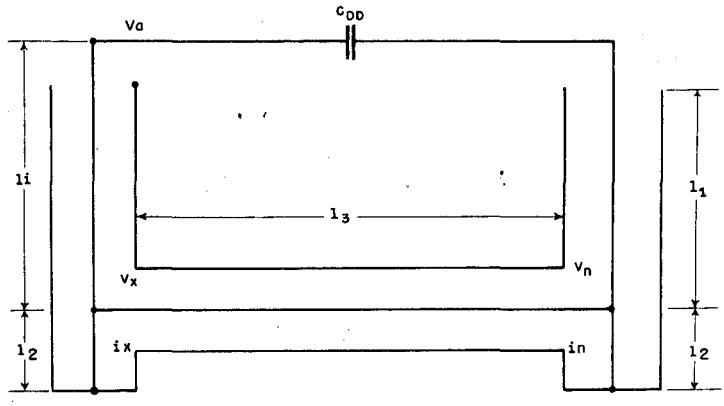

FIGURE 13

MU-4463

Fig. 12

The equivalent circuit of two dee stems and the dee to dee capacitance.

Fig. 13

The equivalent circuit of two dee stems, the dee to dee capacitance and the neutralizing line.

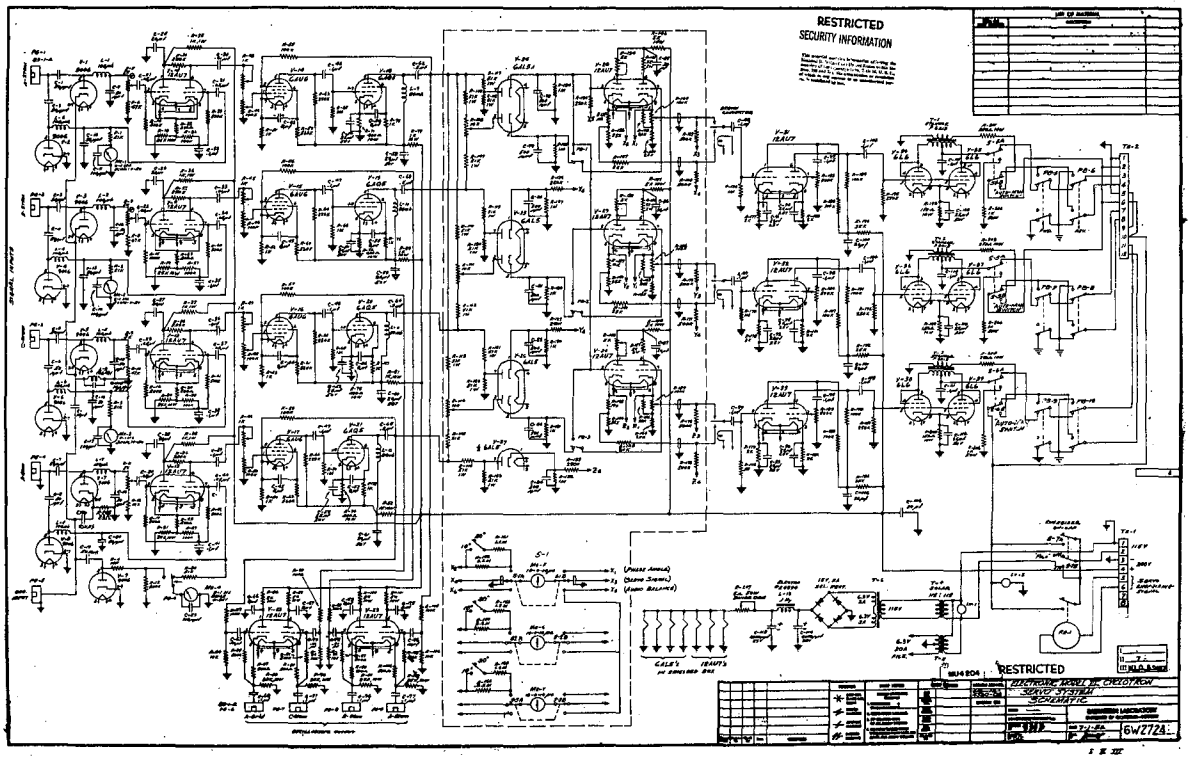

Fig. 14

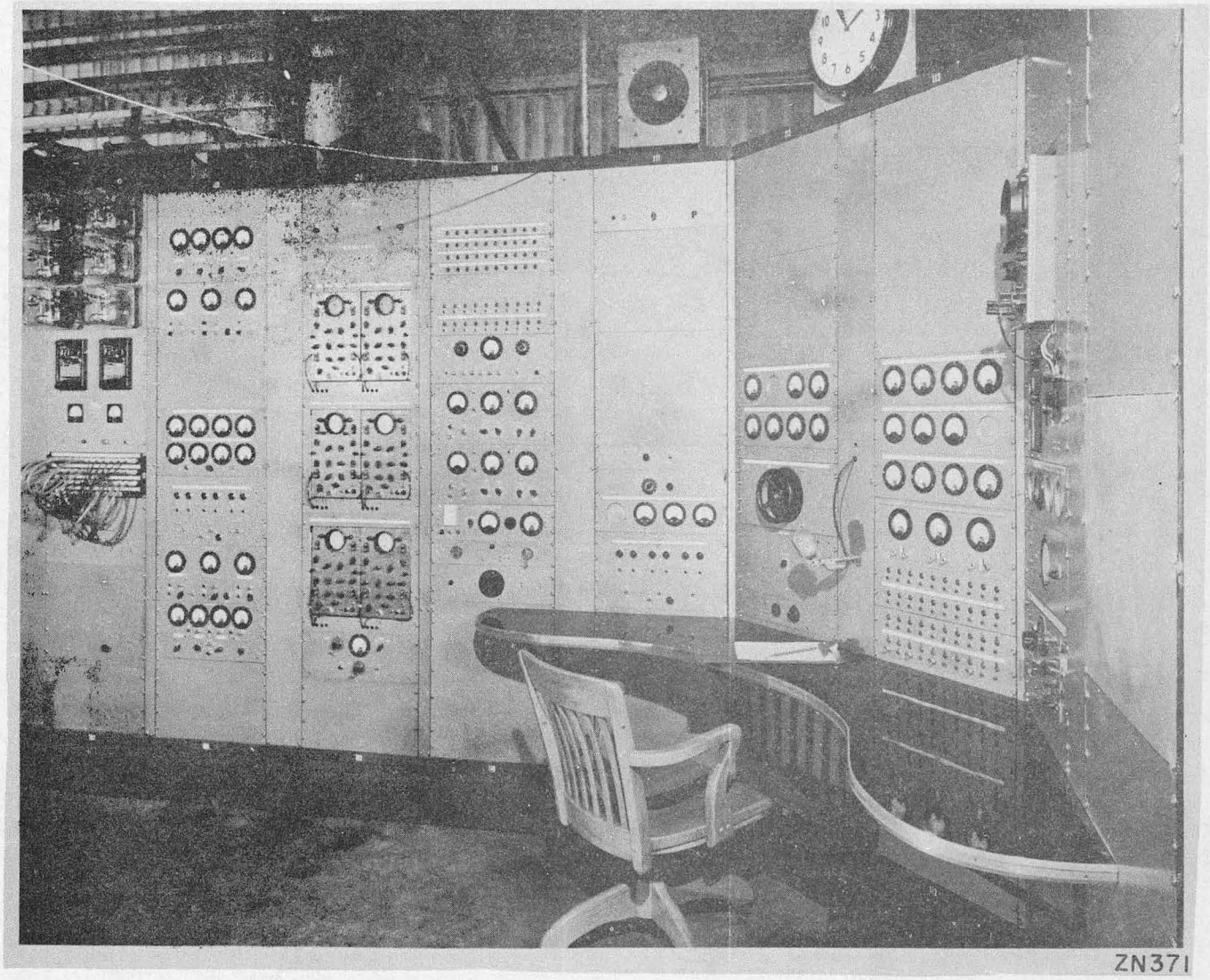

Fig. 15

The consol of the 20 in. cyclotron.

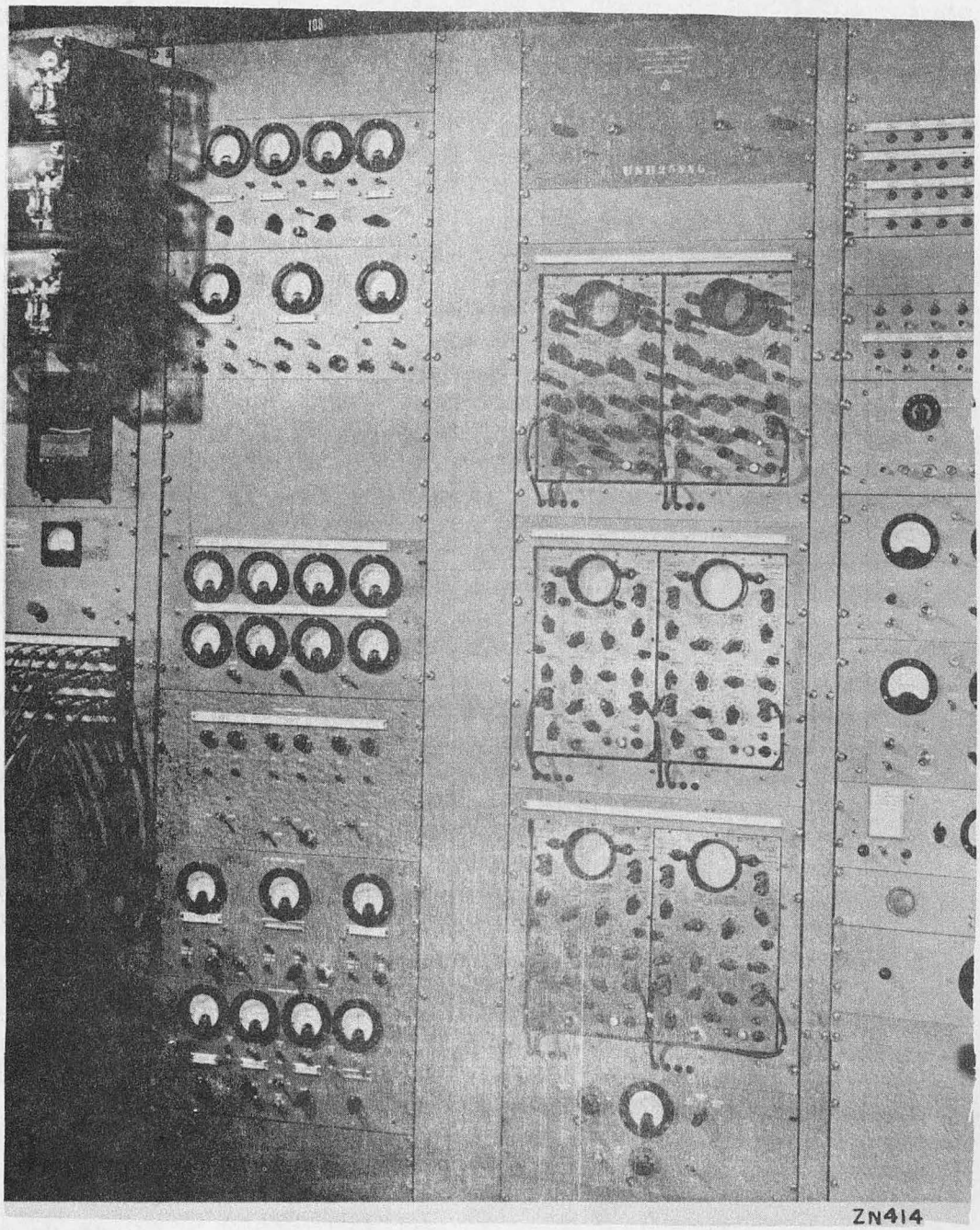

Fig. 16

Rack 108 contains most of the phase control equipment for the 20-inch cyclotron. From top to bottom the chassis are: dee audio pre-amplifiers, dee phase meters, frequency converters, grid servo control smplifiers, grid phase meters and grid audio pre-amplifiers. The oscilloscopes in rack 109 monitor the phase signals by means of lissajou figures. Left to right and top to bottom the oscilloscopes show the following phase information: A dee B dee, A dee C dee, B dee C dee, A grid B grid, A grid C grid, B grid C grid.

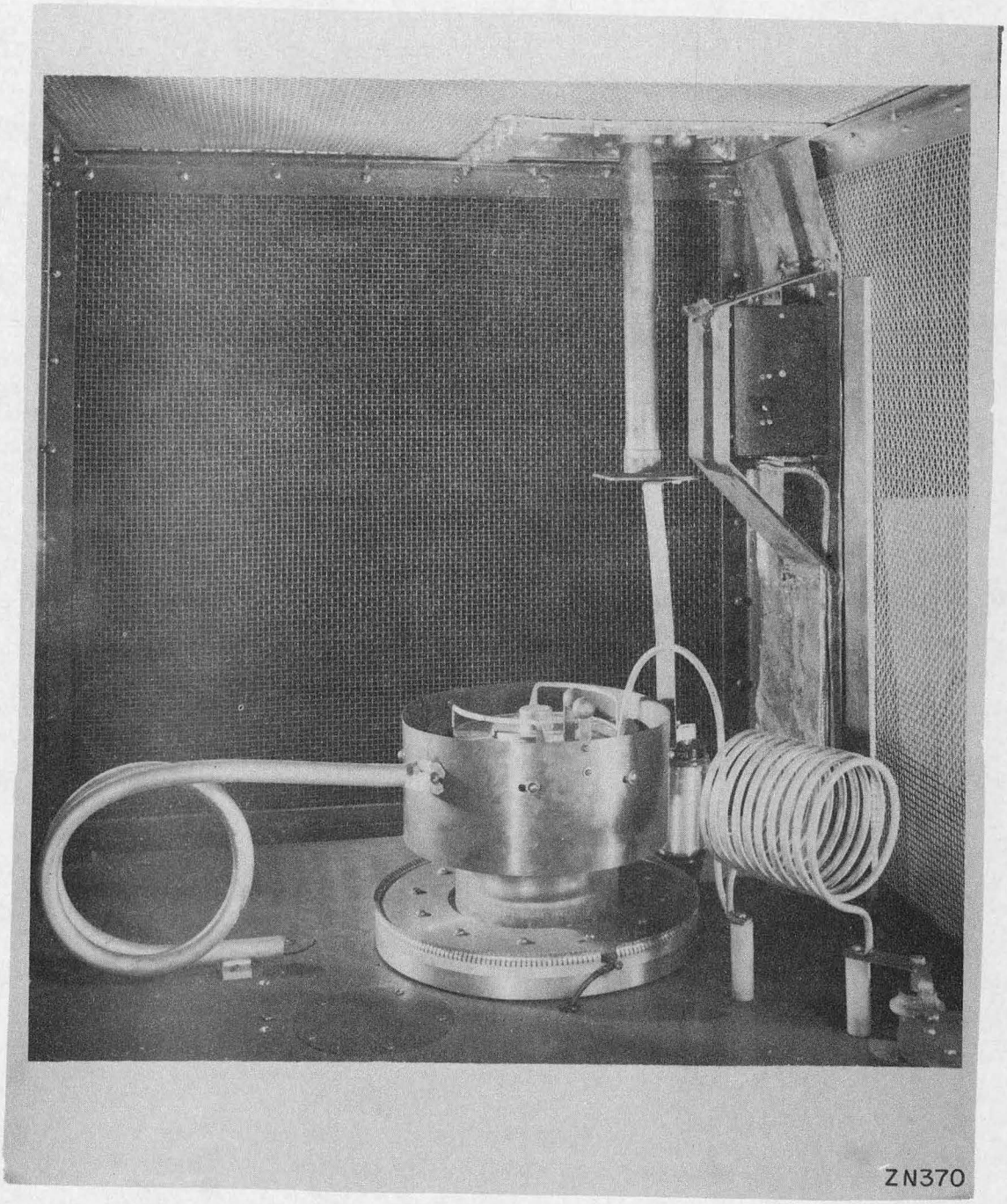

Fig. 17

One of the three final amplifiers of the 20-inch cyclotron. The tube shown is a RCA 6166.

Fig. 18

The three neutralizing lines of the 20-inch cyclotron are connected from dee stem to dee stem.

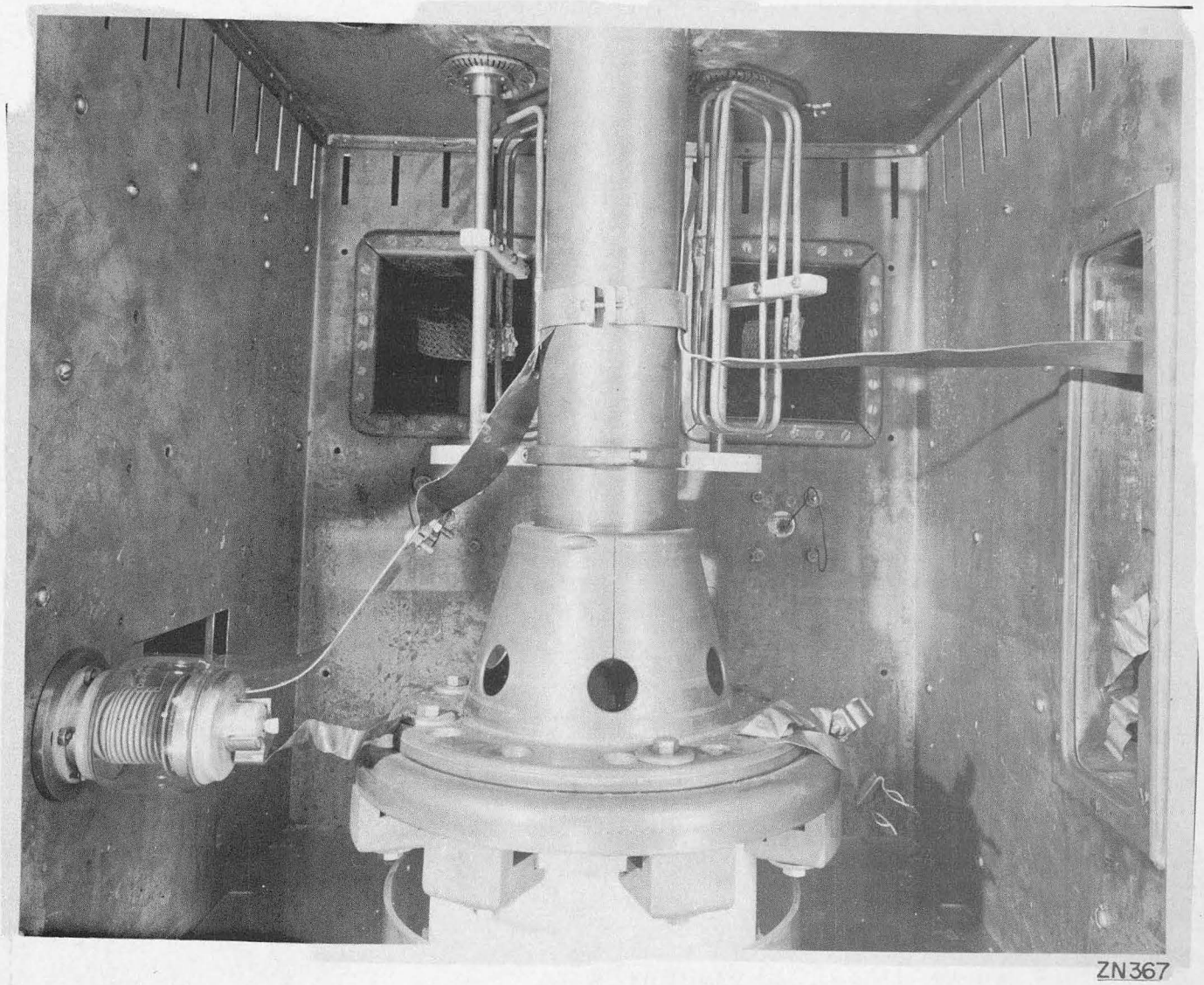

Fig. 19

An interior view of the shorted end of one of the dee stems of the 20-inch cyclotron. The two rectangular openings in the rear are the ends of the neutralizing lines. The two rectangular coils are the neutralizing loops the position of which is adjustable by means of motors mounted above. The rectangular opening to the right is the end of the driving transmission line.

DECLASSIFIED