UCRL-1885

~~CONFIDENTIAL~~

SE~~CURITY INFORMATION~~

DECLASSIFIED

UNIVERSITY OF CALIFORNIA — BERKELEY

TWO-WEEK LOAN COPY

This is a Library Circulating Copy which may be borrowed for two weeks. For a personal retention copy, call Tech. Info. Division, Ext. 5545

RADIATION LABORATORY

UCRL-1885

~~CONFIDENTIAL~~

SE~~CURITY INFORMATION~~

DISCLAIMER

This document was prepared as an account of work sponsored by the United States Government. While this document is believed to contain correct information, neither the United States Government nor any agency thereof, nor the Regents of the University of California, nor any of their employees, makes any warranty, express or implied, or assumes any legal responsibility for the accuracy, completeness, or usefulness of any information, apparatus, product, or process disclosed, or represents that its use would not infringe privately owned rights. Reference herein to any specific commercial product, process, or service by its trade name, trademark, manufacturer, or otherwise, does not necessarily constitute or imply its endorsement, recommendation, or favoring by the United States Government or any agency thereof, or the Regents of the University of California. The views and opinions of authors expressed herein do not necessarily state or reflect those of the United States Government or any agency thereof or the Regents of the University of California.

UNIVERSITY OF CALIFORNIA
Radiation Laboratory

Cover Sheet
Do not remove

INDEX NO. UCRL 1835
This document contains 31 pages
This is copy 17 of 35 series A

DECLASSIFIED

Issued to University of California Radiation Lab.

CONFIDENTIAL

Classification

Each person who receives this document must sign the cover sheet in the space below.

Route to	Noted by	Date	Route to	Noted by	Date
	B. Hubbard	10. 22. 52			

I-5(M)

UNIVERSITY OF CALIFORNIA
Radiation Laboratory

Cover Sheet
Do not remove

INDEX NO. UCRL-1885 Addendum
This document contains 1 pages
This is copy 17 of 35 series A

DECLASSIFIED

Issued to University of California Radiation Laboratory

Classification

Each person who receives this document must sign the cover sheet in the space below.

Route to	Noted by	Date	Route to	Noted by	Date

I-5(M)

DECLASSIFIED

CONFIDENTIAL

UNIVERSITY OF CALIFORNIA
Radiation Laboratory
Berkeley, California

E R R A T U M

To: Standard Distribution—Technology-Materials Testing Accelerator

From: Information Division

Subject: Erratum to UCRL-1885

It is requested this erratum be attached to your copy(s) of UCRL-1885.

The drawings listed on page 6 are the assembly drawings of the drift tubes showing the magnets in place. The assembly drawings of the magnets are as follows:

DTM 1	5G3126, 5G3136
DTM 2	5G3146, 5G3156
DTM 3	5G3166, 5G3176
DTM 4	5G3186, 5G3196
DTM 5, 6, 7 and 8	5G3206, 5G3216

CONFIDENTIAL

CLASSIFICATION CANCELLED
BY AUTHORITY OF THE DECLASSIFICATION BRANCH, USAEC
BY B J Corbett 3-15-57
SIGNATURE OF THE PERSON MAKING THE CHANGE DATE

DECLASSIFIED

UCRL-1885

Technology-Materials Testing Accelerator

CONFIDENTIAL

SECURITY INFORMATION

UNIVERSITY OF CALIFORNIA

Radiation Laboratory

Contract No. W-7405-eng-48

FULL SCALE DRIFT TUBE MAGNET REPORT

D. Sewell and H. Parmentier

July, 1952

CLASSIFICATION CANCELLED
BY AUTHORITY OF THE DECLASSIFICATION BRANCH USAEC
BY B. Foskett 3-15-57
SIGNATURE OF THE PERSON MAKING THE CHANGE
DATE

CONFIDENTIAL

SECURITY INFORMATION

RESTRICTED DATA

This document contains restricted data as defined in the Atomic Energy Act of 1946. Its transmittal or disclosure of its contents in any manner to an unauthorizer person is prohibited.

Berkeley, California

Distribution: Series A

	Copy No.
Atomic Energy Commission, Washington	1 - 4
California Research and Development Corporation	5 - 9
Carbide and Carbon Chemicals Company (ORNL)	10
Carbide and Carbon Chemicals Company (Y-12 Area)	11
Chicago Operations Office	12
Patent Branch, Washington	13
San Francisco Area Office	14 - 15
University of California Radiation Laboratory	16 - 20
Technical Information Service, Oak Ridge	21 - 35

TABLE OF CONTENTS

	Page No.
INTRODUCTION	4
Type of Measurements	4
Personnel	4
Nomenclature	5
MECHANICAL DESIGN	5
MEASURING EQUIPMENT	6
Magnetic Field	6
Magnetization and Uniformity	6
Field on the Drift Tube Surface	7
Axial Forces	7
Power, Resistance, Water Pressure, Water Flow	7
Electrical vs. Magnetic Polarity	8
Thermal Cycling	8
MEASUREMENTS	8
Magnetization	8
Uniformity	8
Magnetic Field on the Drift Tube Surface	9
Force Measurements	9
Power, Resistance, Water Pressure, Water Flow	9
Tank Polarity	10
Thermal Cycling	10
RESULTS	10
Magnetization	10
Uniformity	11
Field on Drift Tube Surface	11
Axial Forces	11
Water Pressure, Power, Resistance, Water Flow	12
Tank Polarity	13
Thermal Cycling on DTM-8	13

CONFIDENTIAL
SECURITY INFORMATION

FULL SCALE DRIFT TUBE MAGNET REPORT

D. Sewell and H. Parmentier

Radiation Laboratory, Department of Physics
University of California, Berkeley, California

July, 1952

INTRODUCTION

Type of Measurements.

Measurements were made on the full scale drift tube magnets to check values predicted from the model magnets measurements.* The following measurements were made.

1. Magnetic Field
   a. Magnetization--current vs. magnetic field.
   b. Uniformity--axial field vs. position on the axis of magnet.
   c. Magnetic field tangent to the drift tube surface.
2. Axial Forces
3. Power, resistance, water pressure, and water flow
4. Electrical vs. magnetic polarity
5. Thermal cycling on drift tube magnet no. 8

Personnel.

These investigations were carried out by the magnetic measurements group which included, in addition to the authors, the following personnel.

Eugene Cox	James Hulse
Frank Grobelch	George Plummer
Fred Holmquist	Edmund Wittry

---

* The model magnet measurements were reported in UCRL-1633.

Nomenclature.

The following nomenclature will be followed in this report.

1. The drift tubes are numbered from the injector end of the cavity with the one-half drift tube at the entrance end being numbered zero.
2. The drift tube magnets are numbered according to the drift tube in which they are placed, i.e. the magnet for drift tube number 3 is designated as DTM-3.
3. The axial forces are those parallel to the axis of the machine.
4. Distances measured in the direction of the beam are designated as positive, those against the direction of the beam as negative.
5. The "required current" is the current which will produce the required focussing.
6. The "minimum current" is 85 percent of the "required current".
7. The "maximum current" for DTM-1 is 120 percent of the "required current"; for DTM-2 is 115 percent of the "required current"; and for DTM-3 through DTM-8 is 110 percent of the required current.

MECHANICAL DESIGN

The full scale units were constructed to scale the model magnets as nearly as possible. The notable exceptions are the steel terminal boxes and the steel support structure on the outer shell, which were not included on the model magnets. The magnetic steel components were constructed of steel in the range AISI C 1020/23, with the exception of the tank extensions which are constructed of cast steel, ASTM grade N-27. The bore tubes on

DTM-1 through DTM-4 are of nonmagnetic stainless steel as are the end plates of DTM-5 through DTM-8. Figure 1 shows DTM-5. The full scale magnets are wound of square copper conductor with two layers of glass tape insulation between each turn. A round hole centrally located in the conductor is used as a passage through which cooling water is forced. Figure 2 shows the magnet coils. All coils are connected in series electrically and in parallel for water conduction. The following is a list of assembly drawings numbers for the eight magnets.

DTM-1	5G7186	DTM-5	5G7226
DTM-2	5G7196	DTM-6	5G7236
DTM-3	5G7206	DTM-7	5G7246
DTM-4	5G7216	DTM-8	5G7256

Figures 9 through 16 show the tank extensions, barrels, and bore tubes as well as the placement of the coils.

MEASURING EQUIPMENT

Magnetic Field.

Magnetization and Uniformity. The magnetization and uniformity curves were made with search coils and an integrator-speedomax set up. The signal from the coils was fed into a voltage integrator which is described in UCRL-1677. The signal from the integrator was applied to the "x" axis of an x-y recorder (leeds and Northrup Speedomax no. 69950, 50 mv. full scale, travel in both directions.) Figure 3 shows the speedomax and integrator. In the case of magnetization curves, a signal from a 50 mv. shunt in series with the current was applied directly to the "y" axis of an x-y recorder. For the uniformity runs a voltage signal proportional to the position of the coils was applied to the "y" axis. This signal was obtained from a slide wire mounted on the track that was used to position the coils. Figure 4 shows DTM-5 and search coil track set up for measurements.

Field on the Drift Tube Surface. For measuring the field on the drift tube surface a calibrated General Electric gaussmeter was used. The magnitude and polarity of the radial (perpendicular to the magnet axis) and axial (parallel to the magnet axia) components of the field were measured at several points on the surface of the drift tube.

Axial Forces.

The axial forces between magnets 1 and 2; 2 and 3 were measured directly by using three calibrated strain gages, type SR-4 5-1. The magnets were mounted with their axes horizontal. One magnet was mounted on the floor on wooden skids, while the other magnet was suspended from a crane to eliminate friction. The strain gages were placed on stainless steel rods that were spaced 120° apart. Two strain gages were mounted diametrically opposite one another on each of the rods and connected in series for the measurements. The stainless steel rods were attached to magnets at each end through universal joint connections. See Fig. 5 which illustrates the set up with magnets 2 and 3.

The axial forces between magnet 4 and 5; 5 and 6; 6 and 7; 7 and 8 were not direct measurements but values calculated from the following measurements. The "required current" was put through the magnet coils of a given magnet. A General Electric gaussmeter was used to measure the radial component of the magnetic field at several points throughout a volume that would normally be occupied by the coil of the neighboring magnet.

Power, Resistance, Water Pressure, Water Flow.

Power was measured as a function of current and voltage. To measure voltage a Hewlett Packard vacuum tube voltmeter was used. A Wester d.c. millivolt meter, Model 45, was used in conjunction with a shunt to measure current.

A General Electric portable double bridge no. 5927123G was used to measure magnet resistance.

The inlet and outlet water pressure was measured with U. S. pressure gages.

The water flow through the magnet coils was measured with a Fischer Porter Flow Meter no. S3-1146/2. Iron constantin thermocouples were used to measure the inlet and outlet water temperature. The cold junction temperature was measured with a mercury thermometer placed near the cold junction.

All of the above measuring equipment was calibrated before measurements were taken.

Electrical vs. Magnetic Polarity.

The magnetic polarity of each magnet was determined by a magnetic compass when a few amperes from a storage battery were flowing through the magnet coils.

Thermal Cycling.

A simple automatic switching device was used to periodically turn the current through a magnet on and off.

MEASUREMENTS

Magnetization.

Field strength at the center of each magnet was measured as a function of magnet current.

Uniformity.

The value of flux density was determined as a function of the position along the magnet axis. Data were taken were three different values of current for each magnet--"required current", "minimum current", and "maximum

current". Individual runs from -45 in. through the center and on to +45 in.; -60 in. through the center and on to +60 in.; from the center to -120 in., from the center of +120 in. along the magnet axis were made for each of the above values of current.

Magnetic Field on the Drift Tube Surface.

The magnitude and polarity of the magnetic field were determined at several points on the drift tube surface. To get these measurements a line was drawn to represent the cross section of the drift tube surrounding a magnet. At each point the radial and axial components of the magnetic field were measured.

Force Measurements.

Direct axial force measurements were made only on magnets 1 and 2, and 2 and 3. A constant ratio of ampere turns was maintained as the current was raised and lowered incrementally. The three strain gages that were used were interchanged so that each gage had been in every position. A full set of measurements was taken for each of the three configurations of the gages. For each magnet, 4 through 8, the radial components of the magnetic field were measured at points throughout a volume that would be normally occupied by the coil of the positive adjacent magnet coil and the negative adjacent magnet coil.

Power, Resistance, Water Pressure, Water Flow.

To determine the power the voltage across the magnet winding and the current through the windings were measured when the magnet was at thermal equilibrium. The point of thermal equilibrium was determined when the inlet and outlet water temperature reached a constant value. The water pressure across the magnet windings and the water flow through the magnet windings were also measured. To determine magnet resistance the resistance

of magnet coils was measured with no current flowing through them and with the inlet and outlet water temperatures equal and constant. The magnet resistance at 20°C was calculated from the measured resistance and temperature.

Tank Polarity.

After connecting the storage battery to the magnet with the positive terminal on the lead nearest the entrance end of the magnet, the field direction at points approximately 10 feet from the entrance end of the magnet and 10 feet from the exit end of the magnet was determined.

Thermal Cycling.

The test consisted of cycling the magnet 162 times. For each cycle 1500 amperes was allowed to pass through DTM-8 until the temperature of the outlet cooling water had reached equilibrium. Each of these cycles took approximately 30 minutes.

RESULTS

Magnetization.

The full scale magnetization curves compared very well with model measurements. The variation between model and full scale measurements on magnets 2 through 8 was 2 percent or less, while on magnet no. 1 the variation was 5 percent. The magnetization curves with adjoining magnets on (shown on Fig. 6) were computed from the magnetization and uniformity measurements made on each magent alone. The magnitude of the corrections to the magnetization of a single magnet were determined from the stray field shown on the uniformity curves of the adjoining magnets. These correction were made assuming that the fields would add algebraically. This is not exact in cases where steel is present, but since the corrections were small, the error is negligible.

Uniformity.

The curves shown in Figs. 7 and 8 are the computed uniformity curves with the neighboring full scale magnet on. The curves, Figs. 7 and 8, were determined by adding algebraically the magnetic fields taken from the uniformity measurements of adjacent individual magnets. The relative shapes of the three curves run at "maximum", "required", and "minimum" current were identical. To find the current required to produce the required focussing, the $\int_{-\infty}^{+\infty} \%H^2 dl$* was calculated from curves 7 and 8. The H^2 required was found by dividing the value of this integral into the value of $\int_{-\infty}^{+\infty} H^2 dl$ supplied by L. R. Henrich. (See model report UCRL-1633.) The amperes required to produce this value of H were then found from the magnetization curve with adjacent magnets on. These values for the current required and the ampere turns required are listed in Table I. The greatest variation between model and full scale values is 5 percent.

Field on the Drift Tube Surface.

The resultant field and its angle was computed from the measurements of axial and radial field on the drift tube surface. There were no model measurements with which to compare the full scale measurements. The results are shown in Figs. 9 through 16.

Axial Forces.

The full scale measurements between magnets 1 and 2 gave a force of 188 pounds. Comparable model measurements gave 193 pounds. This represents a difference of about 3 percent. Full scale measurements between magnet 2 and 3 gave a force of 1970 pounds, while model measurements gave 1680 pounds. This represents a difference of 15 percent. No error could be

---

* The fields are measured in terms of percent of the central field strength.

found to explain the difference between the model and full scale measurements in this case. However, since the allowable force is around 6000 pounds the full scale measurements are well within this values.

For magnets 5 through 8 the force on each winding of the magnet was calculated from the measurements of radial components of the field. The total force is determined by integrating over the entire volume of the coil. This method of determining force is only valid where the amount of steel in the presence of the coil is small. Therefore this technique could only be used on magnets 5 through 8. The greatest variation between calculated measurements on the full scale magnet and direct model measurements was 15 percent. This was considered to be good agreement for the type of measurement involved.

From the measurements made on 1-2, 2-3, 5 through 8 it was concluded that the model measurements are accurate within 15 percent and therefore it was not considered advisable to take the necessary time for direct measurements on magnets 3-4, 4-5.

Water Pressure, Power, Resistance, Water Flow.

The values for the water flow were determined from measurements made at 70 pounds pressure drop across the magnet terminals. These values were reduced to the 64 pounds pressure drop that will be available at the plant site by assuming that the flow rate varies directly as the square of the pressure drop. Power was determined as the product of voltage and current across the magnet windings.

The resistance and water flow measurements were direct. All the above values for water pressure, power, resistance, and water flow are listed in Table I.

Tank Polarity.

The measured magnet polarity was checked against assembly drawings and found to agree. Figure 17 shows the magnetic vs. electrical polarity of the magnets.

Thermal Cycling on DTM-8.

The coils, clamps, and insulation in this magnet were inspected when it was disassembled after this test. There were no indications of damage to any of these parts due to this cycling.

Table I

REQUIREMENTS FOR FULL SCALE DRIFT TUBE MAGNETS

Magnet Number	1	2	3	4	5	6	7	8
Required Current (for theoretical $\int_{-\infty}^{+\infty} H^2 dl$ along center-line*)	598	572	890	956	1045	1000	1070	1100
Mega-ampere turns	.242	.424	.574	.588	.695	.665	.712	.732
Voltage Drop across magnet terminals for required amps	69	148	167	167	149	142	154	157
Required Power-KW	42	82	152	160	156	142	164	173
Magnet Cooling Water Pressure Drop -PSI	114	114	64	64	64	64	64	64
Flow Rate -GPM	14	24	34	37	39	39	39	39
Water Temp. Rise at Required Power - °C	11	13	17	16	15	14	16	17
Coil Resistance at 20°C - ohms	.1086	.2405	.1737	.1616	.1324	.1320	.1328	.1322

* Includes estimated effects of adjacent magnets

DECLASSIFIED

CONFIDENTIAL

SECURITY INFORMATION

Information Division
7/29/52 bw

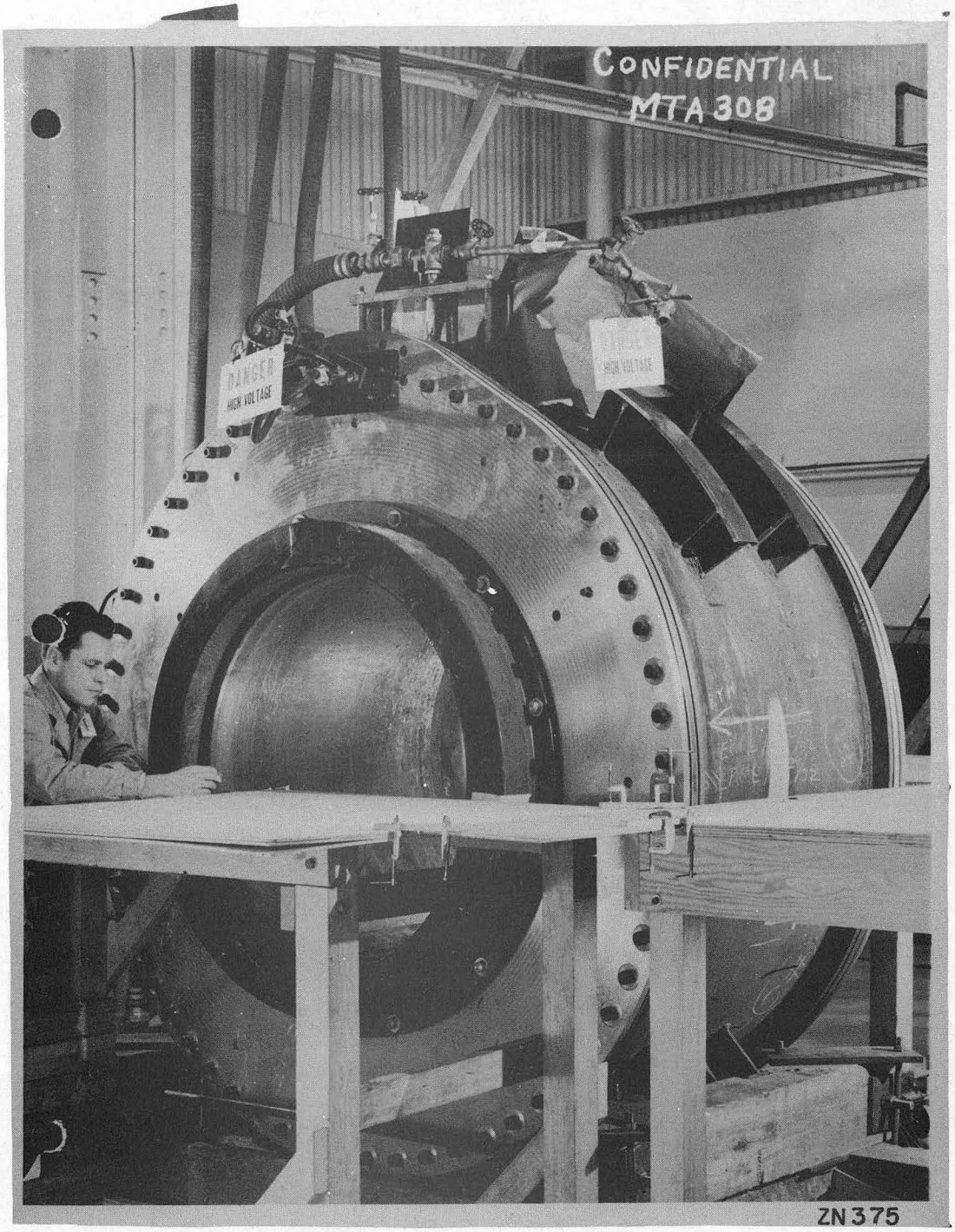
CONFIDENTIAL
MTA 308
DANGER
HIGH VOLTAGE
HIGH VOLTAGE
ZN 375

Fig. 1

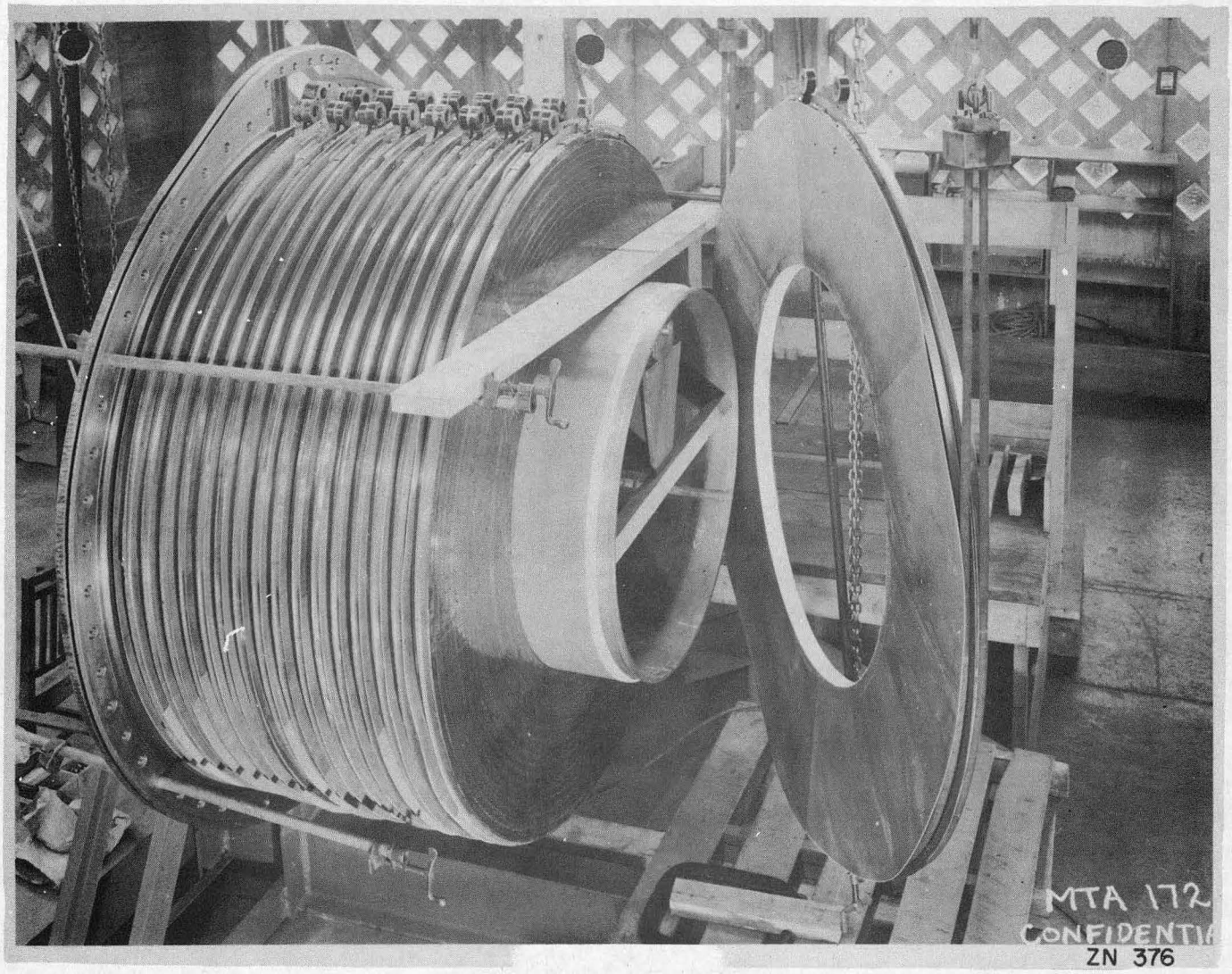

Fig. 2

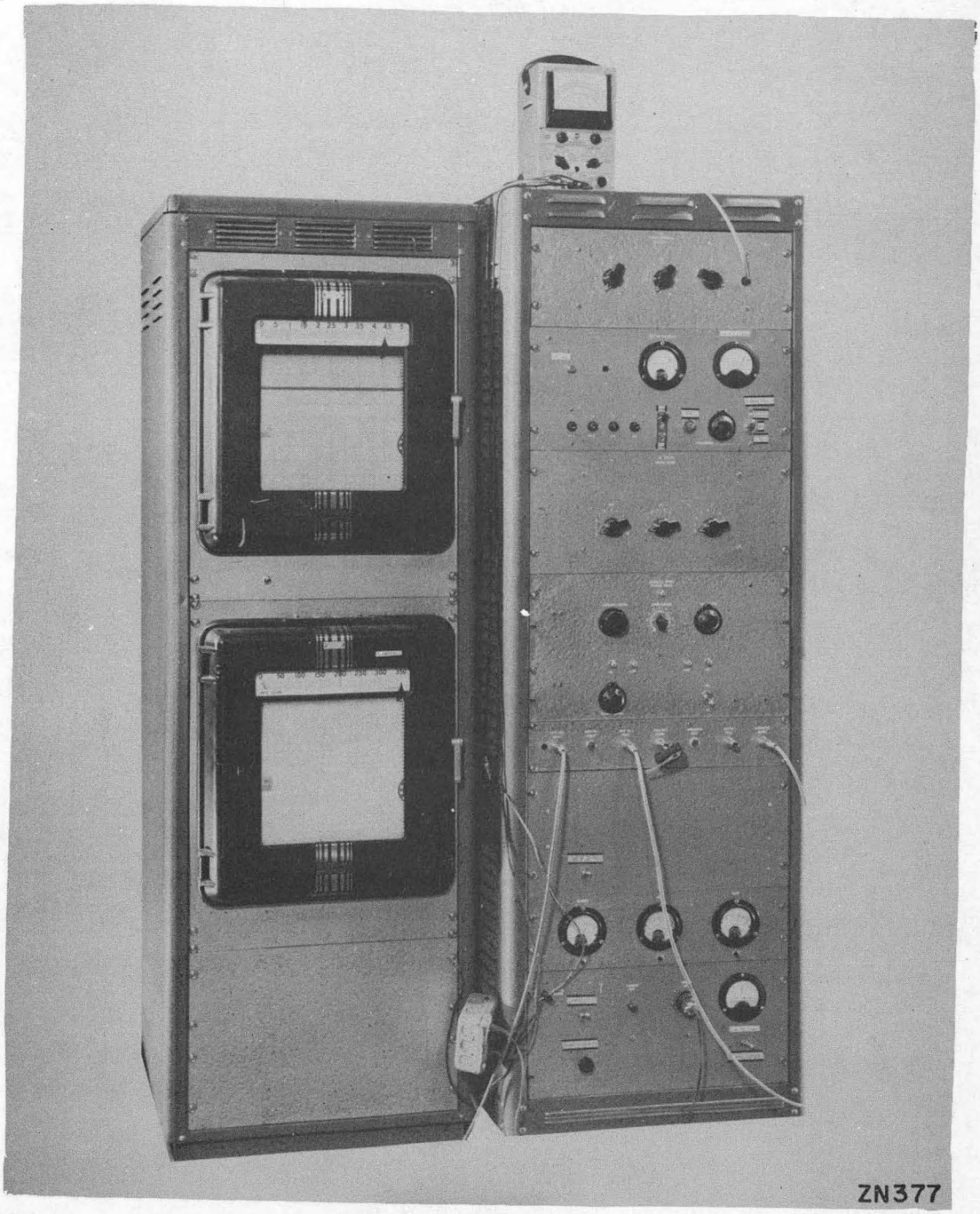

Fig. 3

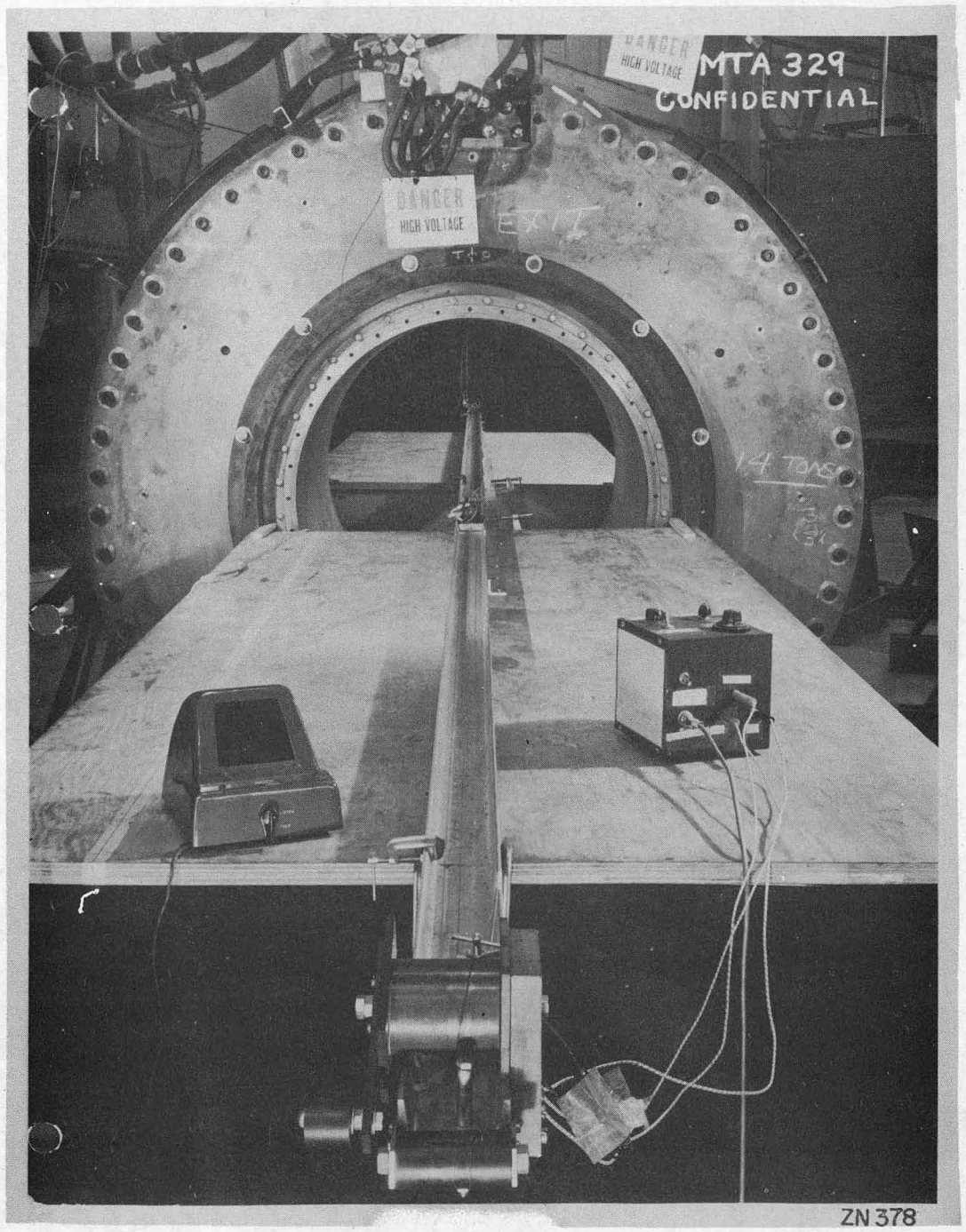
DANGER
HIGH VOLTAGE
MTA 329
CONFIDENTIAL
DANGER
HIGH VOLTAGE
EXIT
14 TONS
ZN 378

Fig. 4

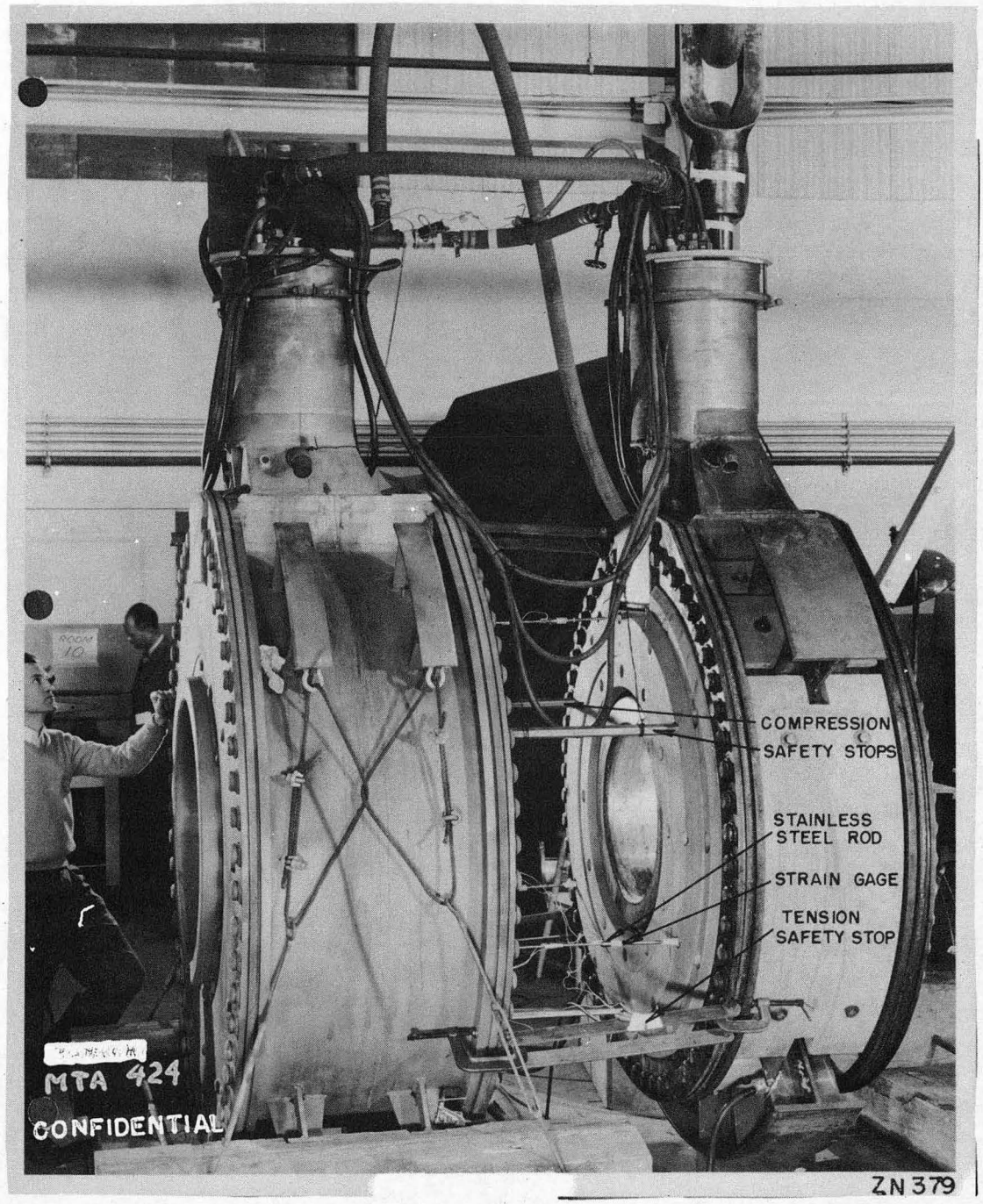
COMPRESSION
SAFETY STOPS
STAINLESS
STEEL ROD
STRAIN GAGE
TENSION
SAFETY STOP
MTA 424
CONFIDENTIAL
ZN 379

Fig. 5

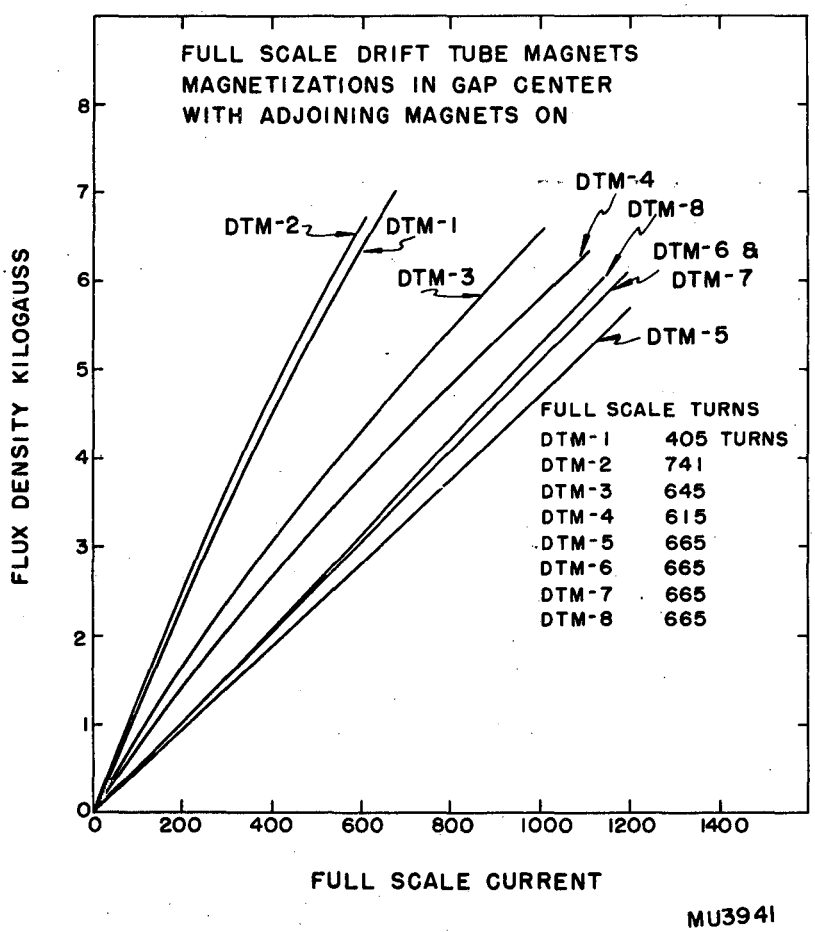
FULL SCALE DRIFT TUBE MAGNETS
MAGNETIZATIONS IN GAP CENTER
WITH ADJOINING MAGNETS ON
DTM-2
DTM-1
DTM-3
DTM-4
DTM-8
DTM-6 &
DTM-7
DTM-5
FULL SCALE TURNS
DTM-1 405 TURNS
DTM-2 741
DTM-3 645
DTM-4 615
DTM-5 665
DTM-6 665
DTM-7 665
DTM-8 665
FLUX DENSITY KILOGAUSS
0
1
2
3
4
5
6
7
8
0
200
400
600
800
1000
1200
1400
FULL SCALE CURRENT
MU3941

Fig. 6

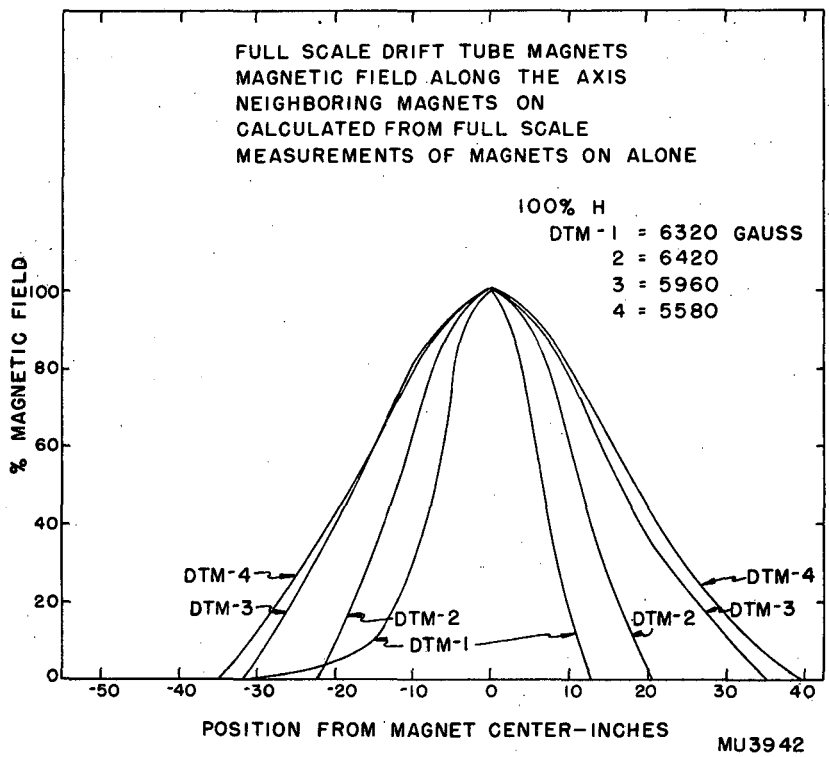

CONFIDENTIAL

Fig. 7

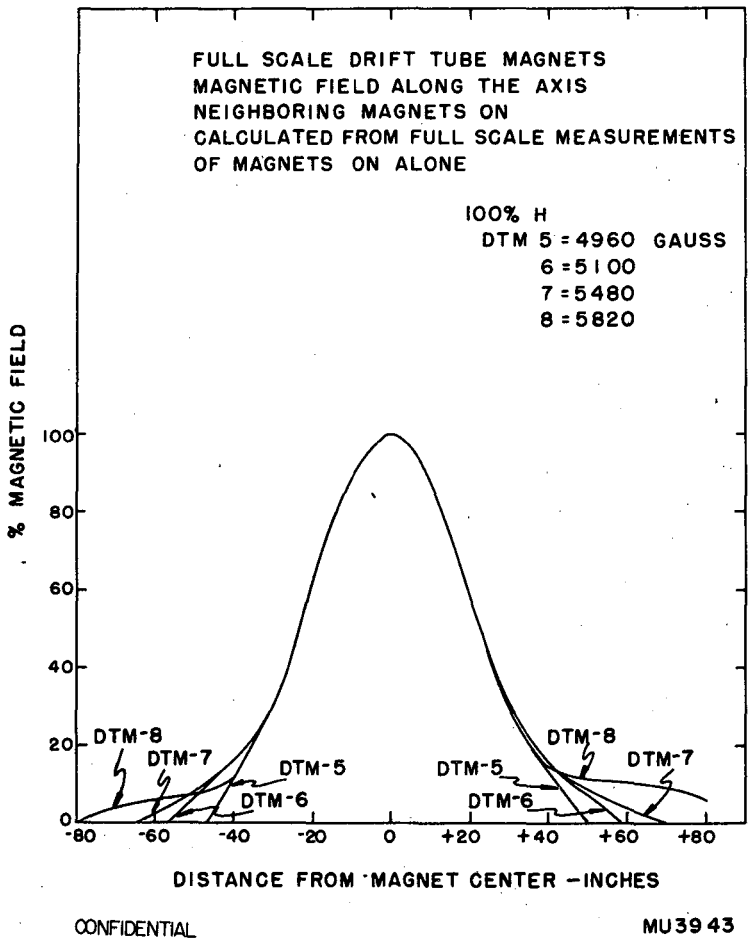
FULL SCALE DRIFT TUBE MAGNETS
MAGNETIC FIELD ALONG THE AXIS
NEIGHBORING MAGNETS ON
CALCULATED FROM FULL SCALE MEASUREMENTS
OF MAGNETS ON ALONE
100% H
DTM 5 = 4960 GAUSS
6 = 5100
7 = 5480
8 = 5820
% MAGNETIC FIELD
100
80
60
40
20
0
DTM-8
DTM-7
DTM-5
DTM-6
DTM-5
DTM-6
DTM-8
DTM-7
-80
-60
-40
-20
0
+20
+40
+60
+80
DISTANCE FROM MAGNET CENTER -INCHES
CONFIDENTIAL
MU3943

Fig. 8

DT # 1 FULL SCALE MAGNET
FIELD STRENGTH ON THE DT SURFACE
CURRENT = 593 AMPS
NIFS = $.240 \times 10^6$

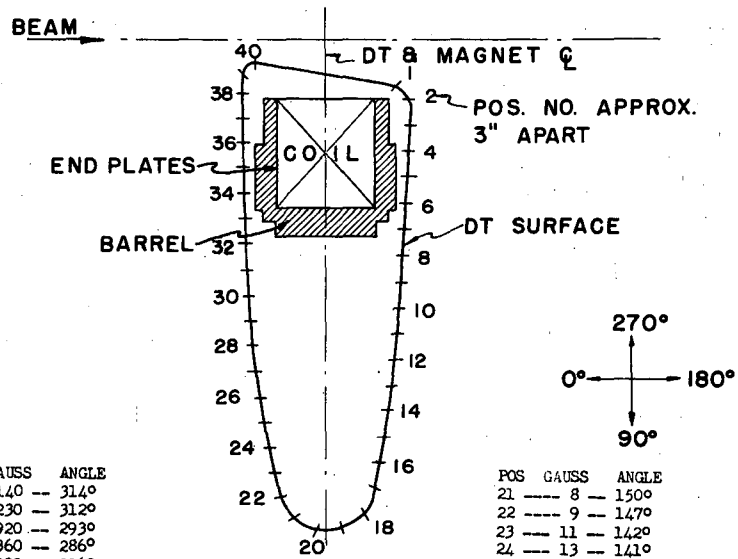

POS	GAUSS	ANGLE
1	2140	314°
2	1230	312°
3	920	293°
4	360	286°
5	200	296°
6	170	299°
7	340	261°
8	130	234°
9	90	236°
10	60	238°
11	40	242°
12	24	233°
13	16	218°
14	14	210°
15	12	204°
16	11	202°
17	10	204°
18	9	201°
19	8	203°
20	7	196°

POS	GAUSS	ANGLE
21	8	150°
22	9	147°
23	11	142°
24	13	141°
25	14	141°
26	15	138°
27	18	131°
28	31	122°
29	47	119°
30	73	124°
31	112	129°
32	190	131°
33	480	65°
34	240	52°
35	190	67°
36	490	85°
37	1130	58°
38	1350	39°
39	1720	27°
40	2388	19°

MU 3944

Fig. 9

DT # 2 FULL SCALE MAGNET
FIELD STRENGTH ON THE DT SURFACE
CURRENT - 555
MAGNET TURNS - 741 TOTAL
NIFS - .411 x 10^6

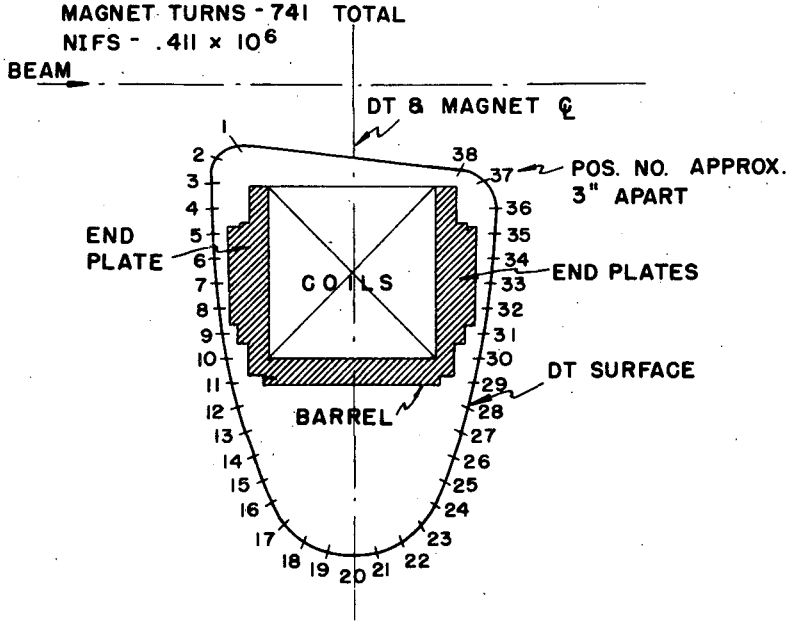

POS	GAUSS	ANGLE
1	-2800	29°
2	-1962	34°
3	-1457	44°
4	-1138	63°
5	608	96°
6	187	51°
7	382	15°
8	662	25°
9	764	54°
10	-1327	87°
11	606	140°
12	226	152°
13	170	143°
14	134	143°
15	109	144°
16	95	149°
17	79	153°
18	72	159°
19	66	165°

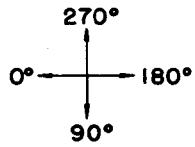

POS	GAUSS	ANGLE
20	65	174°
21	21	187°
22	73	196°
23	80	201°
24	98	207°
25	117	211°
26	129	214°
27	174	216°
28	271	206°
29	602	229°
30	875	276°
31	849	308°
32	669	337°
33	386	347°
34	189	320°
35	688	266°
36	-1183	297°
37	-1670	309°
38	-3256	313°

MU3945

Fig. 10

FIELD STRENGTH ON THE DT # 3 SURFACE

DRIFT TUBE # 3 - FULL SCALE
CURRENT - 902 AMPS
AMPERE TURNS - $.582 \times 10^6$
MAGNET TURNS - 645 TOTAL

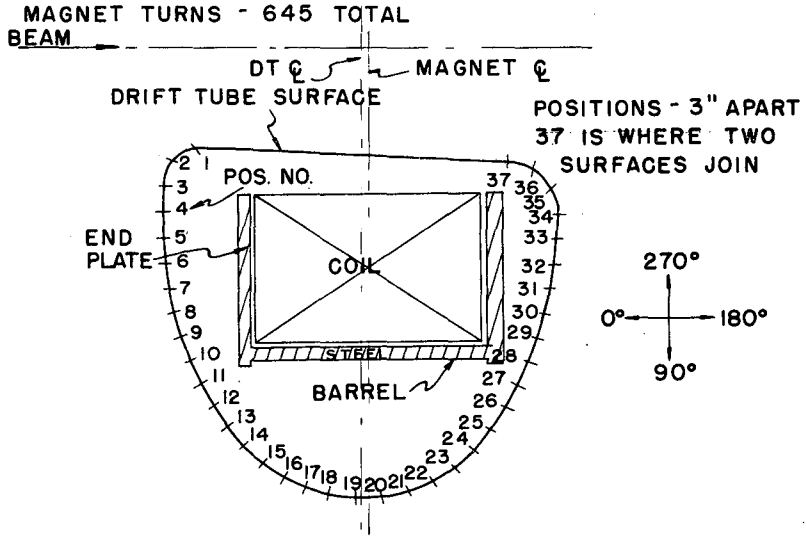

POS	H	ANGLE
1	-2750	27°
2	-2020	30°
3	-1661	33°
4	-1467	37°
5	-1334	45°
6	-1250	47°
7	-1104	57°
8	989	68°
9	867	78°
10	729	91°
11	564	98°
12	468	99°
13	460	105°
14	405	118°
15	347	127°
16	303	136°
17	286	147°
18	267	160°
19	261	175°

POS	H	ANGLE
20	261	185°
21	269	195°
22	292	207°
23	330	215°
24	387	230°
25	452	239°
26	511	253°
27	477	254°
28	711	253°
29	909	268°
30	-1022	279°
31	-1129	292°
32	-1263	301°
33	-1474	309°
34	-1511	317°
35	-1677	319°
36	-2119	320°
37	-3138	313°

MU 3946

Fig. 11

MAGNETIZATION - FIELD STRENGTH ON THE DT #4 SURFACE
DRIFT TUBE #4 - FULL SCALE
CURRENT - 992 AMPS
AMPERE TURNS - $.610 \times 10^6$
MAGNET TURNS - 615 TOTAL

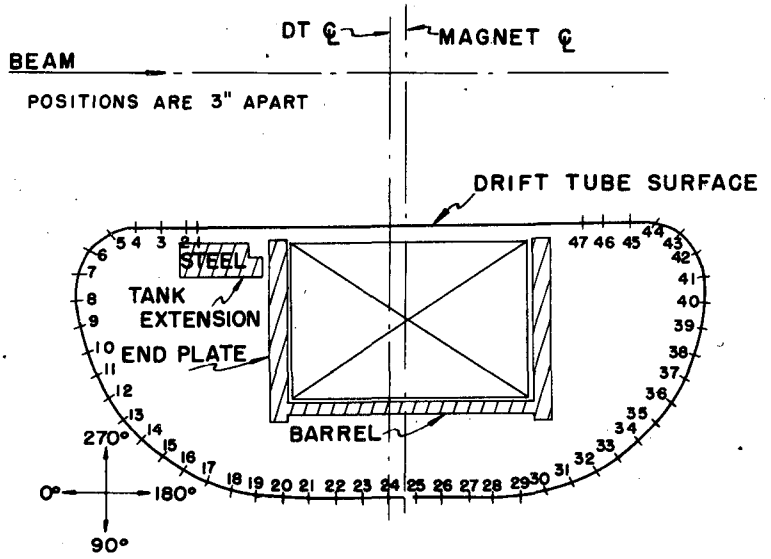

POS	H	ANGLE	POS	H	ANGLE	POS	H	ANGLE
1	954	40°	17	449	95°	33	500	273°
2	964	31°	18	479	101°	34	505	278°
3	1028	28°	19	509	107°	35	528	280°
4	933	25°	20	546	117°	36	562	288°
5	821	29°	21	564	134°	37	590	293°
6	726	31°	22	574	146°	38	650	301°
7	682	37°	23	544	159°	39	677	307°
8	640	40°	24	523	173°	40	759	314°
9	599	49°	25	542	185°	41	820	318°
10	553	53°	26	543	193°	42	930	323°
11	549	61°	27	563	205°	43	1041	323°
12	518	69°	28	645	219°	44	1304	324°
13	483	73°	29	549	235°	45	1522	325°
14	466	80°	30	569	249°	46	1774	318°
15	452	85°	31	573	258°	47	2021	311°
16	445	89°	32	501	265°			

MU3947

Fig. 12

MAGNETIZATION - FIELD STRENGTH ON THE DT # 5 SURFACE

DRIFT TUBE # 5 - FULL SCALE
CURRENT - 1033 AMPS
AMPERE TURNS - $.687 \times 10^6$
MAGNET TURNS - 665 TOTAL

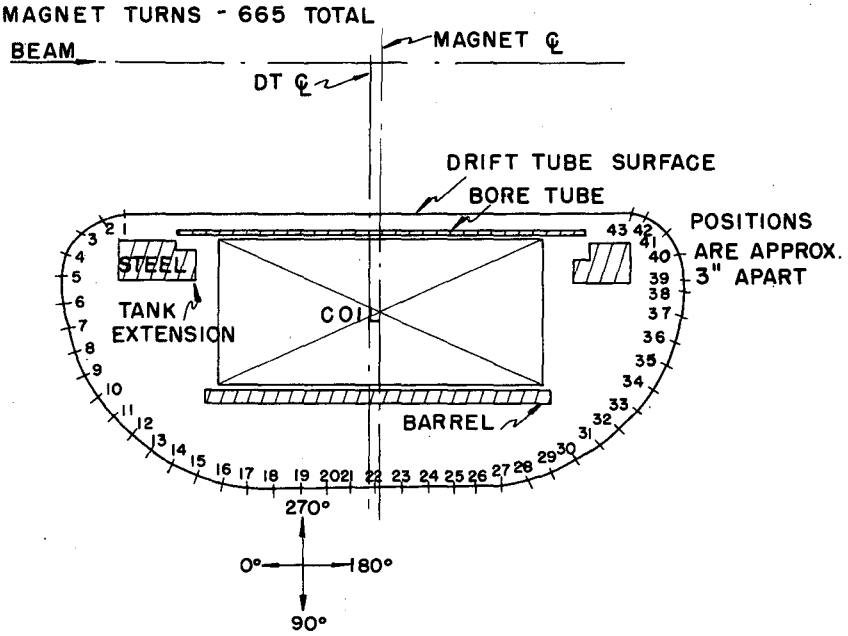

ENTRANCE END

POS	H	ANGLE
1	1320	341°
2	1400	342°
3	1450	18°
4	1390	26°
5	1380	37°
6	1230	45°
7	1130	60°
8	1140	72°
9	1020	75°
10	1000	84°
11	780	96°
12	690	106°
13	560	119°
14	440	129°
15	380	135°
16	320	145°
17	320	145°
18	310	149°
19	320	153°
20	330	169°
21	340	165°

EXIT END

POS	H	ANGLE
22	350	184°
23	350	190°
24	360	195°
25	340	206°
26	320	207°
27	340	218°
28	360	222°
29	390	219°
30	530	226°
31	580	236°
32	710	248°
33	880	261°
34	1060	264°
35	1160	289°
36	1260	294°
37	1430	306°
38	1540	316°
39	1450	316°
40	1460	333°
41	1570	337°
42	1650	339°
43	1810	328°

MU 3948

Fig. 13

MAGNETIZATION-FIELD STRENGTH ON THE DT # 6 SURFACE

DRIFT TUBE #6 - FULL SCALE
CURRENT - 1045 AMPS
MAGNET TURNS - 665 TOTAL

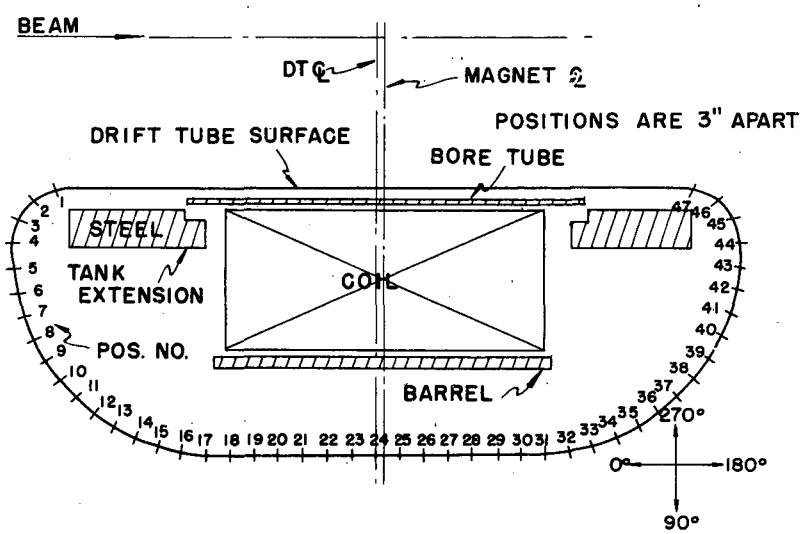

POS	H	ANGLE
1	941	0°
2	1180	6°
3	1215	15°
4	1208	24°
5	1123	33°
6	1160	44°
7	965	55°
8	886	64°
9	807	71°
10	738	79°
11	677	86°
12	630	96°
13	579	101°
14	532	110°
15	487	118°
16	463	127°
17	411	135°
18	371	141°
19	357	146°
20	348	149°
21	357	154°
22	365	160°
23	371	169°
24	382	177°
25	386	186°
26	385	194°
27	367	200°
28	358	207°
29	352	210°
30	361	214°
31	385	218°
32	428	225°
33	483	236°
34	550	241°
35	591	254°
36	641	262°
37	700	268°
38	771	278°
39	840	285°
40	936	292°
41	1046	303°
42	1110	313°
43	1088	322°
44	1262	336°
45	1296	345°
46	1249	353°
47	1132	357°

MU 3949

Fig. 14

FIELD STRENGTH ON THE DT # 7 SURFACE

DRIFT TUBE #7 - FULL SCALE
CURRENT - 1081 AMPS
AMPERE TURNS - 719×10^6
MAGNET TURNS - 665 TOTAL

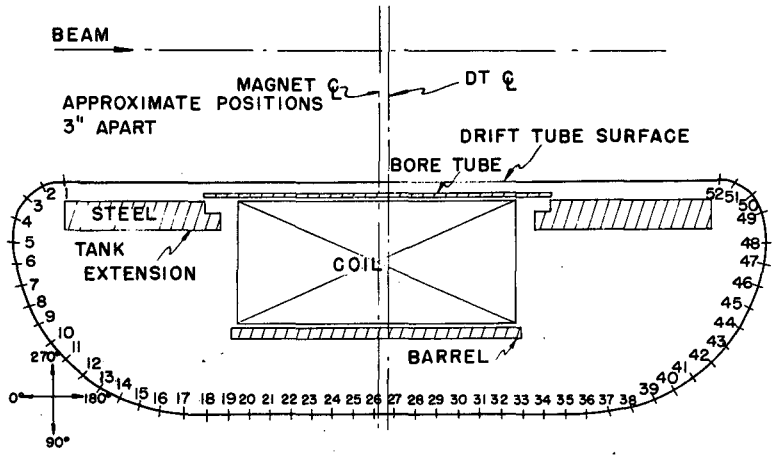

POS	H	ANGLE	POS	H	ANGLE	POS	H	ANGLE	POS	H	ANGLE
1	932	345°	14	586	104°	27	366	186°	40	570	268°
2	1111	358°	15	541	107°	28	364	193°	41	621	273°
3	1116	9°	16	502	116°	29	354	293°	42	659	279°
4	1168	22°	17	481	124°	30	329	202°	43	703	285°
5	1154	32°	18	444	133°	31	331	205°	44	753	289°
6	1086	43°	19	411	142°	32	350	206°	45	830	297°
7	987	50°	20	364	147°	33	378	211°	46	915	305°
8	886	60°	21	341	150°	34	421	218°	47	1040	316°
9	851	68°	22	340	152°	35	453	228°	48	1106	327°
10	734	75°	23	345	154°	36	470	238°	49	1119	341°
11	666	82°	24	354	161°	37	497	247°	50	1096	350°
12	630	88°	25	361	169°	38	533	252°	51	985	6°
13	602	95°	26	370	177°	39	555	262°	52	835	17°

MU3950

Fig. 15

DRIFT TUBE #8 - FULL SCALE - FIELD STRENGTH ON THE DRIFT TUBE SURFACE

CURRENT - 1156 AMPS
AMPERE TURNS - $.769 \times 10^6$
MAGNET TURNS - 665 TOTAL

SEE 5G3216-4 FOR MAGNET DWG.
SEE DWG. # L.O. 26475A FOR DRIFT TUBE

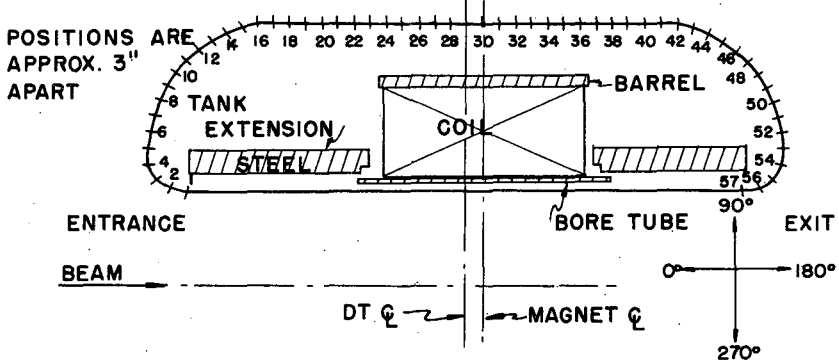

POS	H	ANGLE
1	783	336°
2	978	353°
3	1040	7°
4	1029	19°
5	956	32°
6	896	43°
7	827	53°
8	777	57°
9	690	66°
10	641	73°
11	568	77°
12	538	84°
13	515	87°
14	505	88°
15	492	96°
16	493	102°
17	489	106°
18	520	110°
19	516	116°
20	523	124°
21	511	131°
22	476	140°
23	427	148°
24	390	152°
25	381	154°
26	373	157°
27	390	160°
28	401	168°
29	407	176°
30	407	184°
31	401	188°
32	396	198°
33	382	203°
34	365	208°
35	369	210°
36	399	216°
37	429	218°
38	486	228°
39	481	235°
40	520	243°
41	528	249°
42	538	257°
43	548	263°
44	568	267°
45	584	273°
46	618	277°
47	620	279°
48	661	286°
49	710	291°
50	789	302°
51	889	308°
52	999	317°
53	1054	327°
54	1123	338°
55	1140	349°
56	1094	5°
57	758	30°

MU 3951

Fig. 16

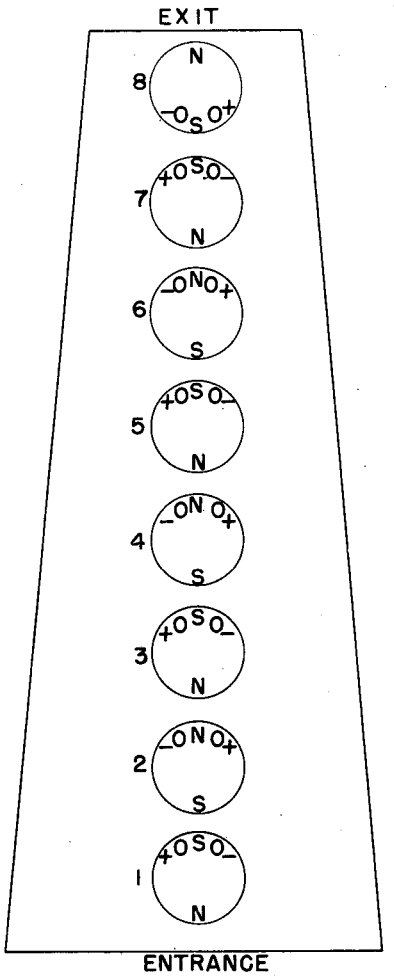

TOP VIEW OF MARK I SHOWING ELECTRICAL POLARITY OF DRIFT TUBE MAGNET CONNECTIONS ON TOP END OF DRIFT TUBE STEMS. N(NORTH) AND S(SOUTH) REFER TO THE MAGNETIC POLARITY OF THE MAGNET WINDINGS.

MU3952

Fig. 17

CONFIDENTIAL

DECLASSIFIED

CONFIDENTIAL